MIAMI-DADE COUNTY
PRODUCT CONTROL SECTION
11805 SW 26 Street, Room 208
Miami, Florida 33175-2474
T (786) 315-2590 F (786) 315-2599
www.miamidade.gov/economy

DEPARTMENT OF REGULATORY AND ECONOMIC RESOURCES (RER)
BOARD AND CODE ADMINISTRATION DIVISION

NOTICE OF ACCEPTANCE (NOA)

Aldora Aluminum & Glass Product, Inc.
11500 Miramar Parkway, Suite # 300
Miramar, FL 33025

SCOPE:

This NOA is being issued under the applicable rules and regulations governing the use of construction materials. The documentation submitted has been reviewed and accepted by Miami-Dade County RER -Product Control Section to be used in Miami Dade County and other areas where allowed by the Authority Having Jurisdiction (AHJ).

This NOA shall not be valid after the expiration date stated below. The Miami-Dade County Product Control Section (In Miami Dade County) and/or the AHJ (in areas other than Miami Dade County) reserve the right to have this product or material tested for quality assurance purposes. If this product or material fails to perform in the accepted manner, the manufacturer will incur the expense of such testing and the AHJ may immediately revoke, modify, or suspend the use of such product or material within their jurisdiction. RER reserves the right to revoke this acceptance, if it is determined by Miami-Dade County Product Control Section that this product or material fails to meet the requirements of the applicable building code.

This product is approved as described herein, and has been designed to comply with the Florida Building Code, including the High Velocity Hurricane Zone.

DESCRIPTION: Series "McKinley" Outswing Aluminum Entrance Door – N.I.

APPROVAL DOCUMENT: Drawing No. **W05-12 Rev I**, titled "Series McKinley Alum. Out-Swing Entrance Door (N.I.)", sheets 1 through 2, 2.1, 3, 4, 4.1, 5, 6, 7.1 and 7 of 7, prepared by AL-Farooq Corporation, dated 03/03/05, with last revision on May 21, 2015, signed and sealed by Javad Ahmad, P.E., bearing the Miami-Dade County Product Control Revision stamp with the Notice of Acceptance number and expiration date by the Miami-Dade County Product Control Section.

MISSILE IMPACT RATING: None. Approved Hurricane Protection Devices, complying w/FBC are required.

Limitations:

1. See Door Pressure (DP) capacity table in sheet 2.2, based on sizes and lock types. See Design Pressure of Horizontal mullion (Transom Bar) w/wo reinforcements in sheet 2.2. Maximum Transom height is 24".
2. Lower DP shall control when doors are mulled with Transom bar as O/X or O/XX (Max DP=60 PSF)
3. Private labelling is not part of this NOA.

LABELING: Each unit shall bear a permanent label with the manufacturer's name or logo, city, state and series and following statement: "Miami-Dade County Product Control Approved", noted herein.

RENEWAL of this NOA shall be considered after a renewal application has been filed and there has been no change in the applicable building code negatively affecting the performance of this product.

TERMINATION of this NOA will occur after the expiration date or if there has been a revision or change in the materials, use, and/or manufacture of the product or process. Misuse of this NOA as an endorsement of any product, for sales, advertising or any other purposes shall automatically terminate this NOA. Failure to comply with any section of this NOA shall be cause for termination and removal of NOA.

ADVERTISEMENT: The NOA number preceded by the words Miami-Dade County, Florida, and followed by the expiration date may be displayed in advertising literature. If any portion of the NOA is displayed, then it shall be done in its entirety.

INSPECTION: A copy of this entire NOA shall be provided to the user by the manufacturer or its distributors and shall be available for inspection at the job site at the request of the Building Official.

This NOA **revises NOA #13-1021.02** and consists of this page 1 and evidence pages E-1 & E-2, as well as approval document mentioned above.

The submitted documentation was reviewed by **Ishaq I. Chanda, P.E.**

MIAMI-DADE COUNTY APPROVED

5/26/15

NOTICE OF ACCEPTANCE: EVIDENCE SUBMITTED

A. DRAWINGS

1. Manufacturer's die drawings and sections (Submitted under files # see below).
2. Drawing No. **W05-12 Rev I**, titled "Series McKinley Alum. Out-Swing Entrance Door (N.I.)", sheets 1 through 2, 2.1, 3, 4, 4.1, 5, 6, 7.1 and 7 of 7, prepared by AL-Farooq Corporation, dated 03/03/05, with last revision on May 21, 2015, signed and sealed by Javad Ahmad, P.E.

B. TESTS (Submitted under files **#13-1021.02 /# 11-0412.04/#06-0405.03**)

1. Test reports on: 1) Air Infiltration Test, per FBC, TAS 202-94
   2) Uniform Static Air Pressure Test, Loading per FBC TAS 202-94
   3) Water Resistance Test, per FBC, TAS 202-94
   4) Forced Entry Test, per FBC 2411 3.2.1, TAS 202-94

   along with installation diagram of outswing aluminum doors, doors w/ sidelite and transom, prepare by Fenestration Testing Laboratory, Inc., Test Report No. **FTL- 4366,** dated 11/09/04, **FTL- 4404,** dated 02/03/05 and **FTL-4502** dated 4/28/05, all signed and sealed by Edmundo Largaespada, P.E.

C. CALCULATIONS

1. Anchor verification calculations and structural analysis, complying with FBC 2014 (5th Edition), prepared by Al Farooq Corporation, dated 10/21/14 and last revised on April 16, 2015, signed and sealed by Javad Ahmad, P.E.
2. Glazing complies w/ ASTME-1300-02 & -04.

D. QUALITY ASSURANCE

1. Miami Dade Department of Regulatory and Economic Resources (RER).

E. MATERIAL CERTIFICATIONS

1. None

F. STATEMENTS (Except item #1, all other items submitted under files **#13-1021.02 /# 11-0412.04**)

1. Statement letter of conformance to FBC 2014 and letter of no financial interest, prepared by Al Farooq Corporation, dated 09/26/14, signed and sealed by Javad Ahmad, P.E.
2. Statement letter of conformance to FBC 2007 & 2010 and letter of no financial interest, prepared by Al Farooq Corporation, dated 09/29/11, signed and sealed by Javad Ahmad, P.E. (Submitted under files # **11-0412.04**)
3. Statement of Lab compliance, as part of the above referenced test reports.
4. Bill of Sale dated July 26, 2013 between SMI Aluminum Systems, LLC (Subsidiaries) and Holdco Aldora Holding LLC (Contributor, for benefits of Aldora Aluminum & Glass Product Inc) contribute, assigned and transferred to Holdco assets, signed by Scott Hauncher, VP Aldora Holding, Inc.((Submitted under files # **11-0412.04**)
5. Statement letter dated DEC 07, 2010, SMI Aluminum System of purchase of SMI system dba Pande Pande, LLC, signed by Leon Silverstein, Managing partner.

Ishaq I. Chanda

Ishaq I. Chanda, P.E.
Product Control Examiner
NOA No. 14-1022.06
Expiration Date: October 26, 2016
Approval Date: May 28, 2015

NOTICE OF ACCEPTANCE: EVIDENCE SUBMITTED

F. STATEMENTS (continue):

6. Assignment & Assumption agreement dated July 26, 2013 between SMI Aluminum System, LLC (Assignor), Architectural Glass Products, LLC (Assignor) and Aldora Holding Inc. (Assignee) signed by Leon Silverstein, manager Aldora Holding Inc. , Leon Silverstein , manager SMI Aluminum Systems, LLC, Leon Silverstein, manager Architectural Glass Products, LLC and Scott Hauncher, VP Aldora Holding, Inc. on behalf of their companies.
7. Statement letter dated 08/21/2013, issued by SMI Aluminum System, LLC of sales of asset and relinquishing of all rights of NOA # **11-0421.04**, signed by Manny Valladares, for and on behalf of SMI Aluminum Systems, LLC.
8. Statement letter dated 08/21/2013, issued by Aldora Aluminum & Glass products, Inc. of legally purchase of asset and rights of NOA # **11-0421.04** from SMI Aluminum System, LLC and requesting that NOA be issued with their name, signed by Manny Valladares, for and on behalf of Aldora Aluminum & Glass Products, Inc.

G. OTHER

1. This NOA **revises** NOA # **13-1021.02**, expiring on October 26, 2016.
2. Test proposals # 04-0332, dated 06-23-04 approved by BCCO and dated 08/27/13 by RER.
3. Door rails extrusion # BCE3304 and medium stiles extrusions # BCE-3315 & BCE 3316

Ishaq I. Chanda

Ishaq I. Chanda, P.E.
Product Control Examiner
NOA No. 14-1022.06
Expiration Date: October 26, 2016
Approval Date: May 28, 2015

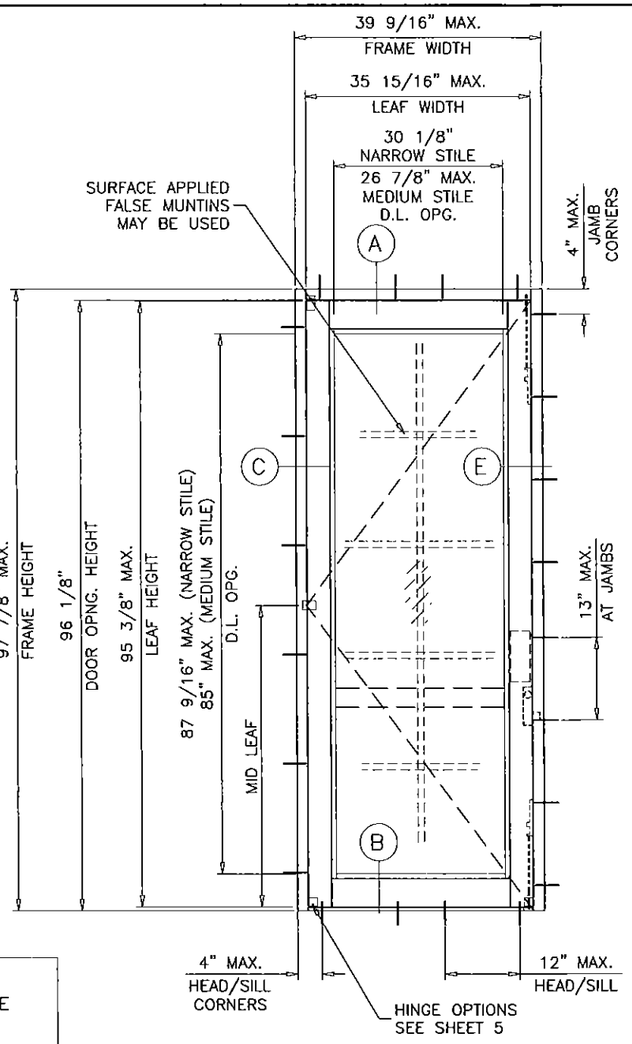

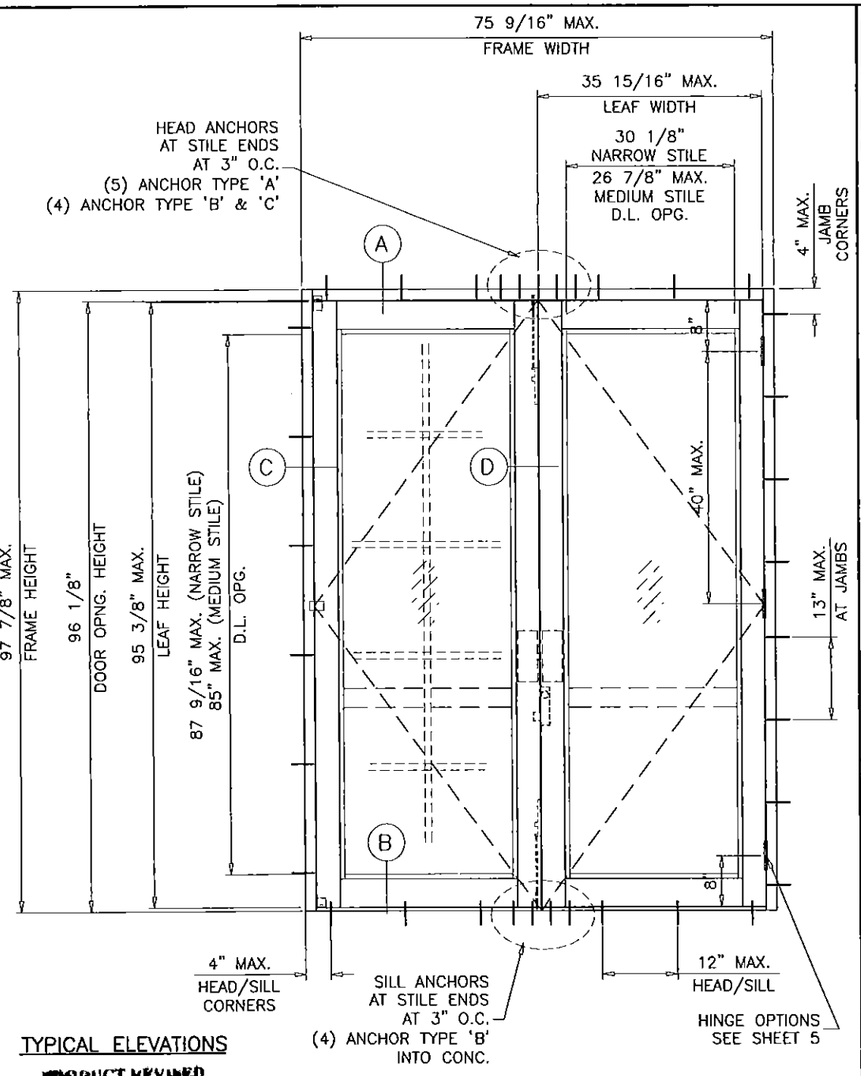

DOORS NOT RATED FOR IMPACT.
INSTALLATION OF THIS PRODUCT IN THE HVHZ AREA REQUIRES THE USE OF APPROVED SHUTTERS OR EXTERNAL PROTECTION DEVICES COMPLYING WITH HVHZ REQUIREMENTS.
INSTALLATION OF THIS SYSTEM OUTSIDE THE HVHZ AREA SHALL MEET THE APPLICABLE REQUIREMENTS FOR WIND BORNE DEBRIS PROTECTION.

SERIES MCKINLEY ALUM OUT-SWING ENTRANCE DOOR

SINGLE (X) AND DOUBLE (XX) LEAF DOORS W/O TRANSOM SEE CHART ON SHEET 2.1 FOR DESIGN LOAD CAPACITY.

SINGLE (O/X) AND DOUBLE (O/XX) LEAF DOORS WITH TRANSOMS SEE SHEET 2.1 FOR HORIZONRTAL MULLION CAPACITY CHART LOWER VALUES FROM DOOR CAPACITY CHART OR HORIZONTAL MULLION (TRANSOM BAR) CAPACITY CHART WILL APPLY TO ENTIRE SYSTEM.

DOORS CAN ALSO BE USED WITH 'SMI-45' STOREFRONT SYSTEM. FOR DOORS WITH STOREFRONT SYSTEM SEE SEPARATE NOA FOR DOOR MULLION CAPACITY AND ANCHORING REQUIREMENTS. THE LOWEST VALUE RESULTING FROM DOOR CAPACITY CHARTS OR STOREFRONT NOA WILL APPLY TO ENTIRE SYSTEM.

DOORS (WITH SADDLE THRESHOLD SMI-109) NOT APPROVED FOR INSTALLATIONS WHERE WATER INFILTRATION RESISTANCE IS REQUIRED.

DOORS (WITH BUMPER THRESHOLD SMI-023) APPROVED FOR WATER INFILTRATION RESISTANCE.

THIS PRODUCT HAS BEEN DESIGNED AND TESTED TO COMPLY WITH THE REQUIREMENTS OF THE FLORIDA BUILDING CODE INCLUDING HIGH VELOCITY HURRICANE ZONE (HVHZ).

1BY OR 2BY WOOD BUCKS BY OTHERS, MUST BE ANCHORED PROPERLY TO TRANSFER LOADS TO THE STRUCTURE.

ANCHORS SHALL BE AS LISTED, SPACED AS SHOWN ON DETAILS, ANCHORS EMBEDMENT TO BASE MATERIAL SHALL BE BEYOND WALL DRESSING OR STUCCO.

ANCHORING OR LOADING CONDITIONS NOT SHOWN IN THESE DETAILS ARE NOT PART OF THIS APPROVAL.

A LOAD DURATION INCREASE IS USED IN DESIGN OF ANCHORS INTO WOOD ONLY.

ALL SHIMS TO BE HIGH IMPACT, LOAD BEARING AND NON-COMPRESSIBLE.

MATERIALS INCLUDING BUT NOT LIMITED TO STEEL/METAL SCREWS, THAT COME INTO CONTACT WITH OTHER DISSIMILAR MATERIALS SHALL MEET THE REQUIREMENTS OF THE FLORIDA BLDG. CODE.

TYPICAL ELEVATIONS

PRODUCT REVISED
as complying with the Florida Building Code
Acceptance No 14-1022.06
Expiration Date OCT 26 2016
By Ishaq I. Chaudhry
Miami Dade Product Control

GLASS D.L.O. DIMS. (NARROW STILE)
D.L.O. HEIGHT = FRAME HEIGHT - 10.313"
D.L.O. WIDTH (X DOORS) = FRAME WIDTH - 9.437"
D.L.O. WIDTH (XX DOORS) = (FRAME WIDTH - 15.313")/2

GLASS D.L.O. DIMS. (MEDIUM STIE)
D.L.O. HEIGHT = FRAME HEIGHT - 12.875"
D.L.O. WIDTH (X DOORS) = FRAME WIDTH - 12.688"
D.L.O. WIDTH (XX DOORS) = (FRAME WIDTH - 21.813")/2

MONOLITHIC GLASS
NON IMPACT

Engr: JAVAD AHMAD
CIVIL
FLA. PE # 70592
C.A.N. 3538
MAY 01 2015

AL-FAROOQ CORPORATION
ENGINEERS & PRODUCT DEVELOPMENT
1235 S.W. 87 AVE
MIAMI, FLORIDA 33174
TEL. (305) 264-8100 FAX. (305) 262-6978

STORE\W05-12SM

SERIES MCKINLEY ALUM OUT-SWING ENTRANCE DOOR (N.I.)

Aldora Aluminum And Glass Products Inc.
11500 MIRAMAR PARKWAY SUITE 300
MIRAMAR, FL. 33025
TEL. (305) 888-6289 FAX. (305) 888-6288

revisions:			
no	date	by	description
E	08.28.13		GENERAL REVISION
F	01.23.14		GENERAL REVISION
G	09.29.14		UPDATED TO 2014 FBC
H	04.14.15		REV. PER RER COMMENTS
I	05.21.15		REV. PER RER COMMENTS

date: 03-03-05
scale: 1/2"=1'-0"
dr. by: HAMID
chk. by:

drawing no.
W05-12

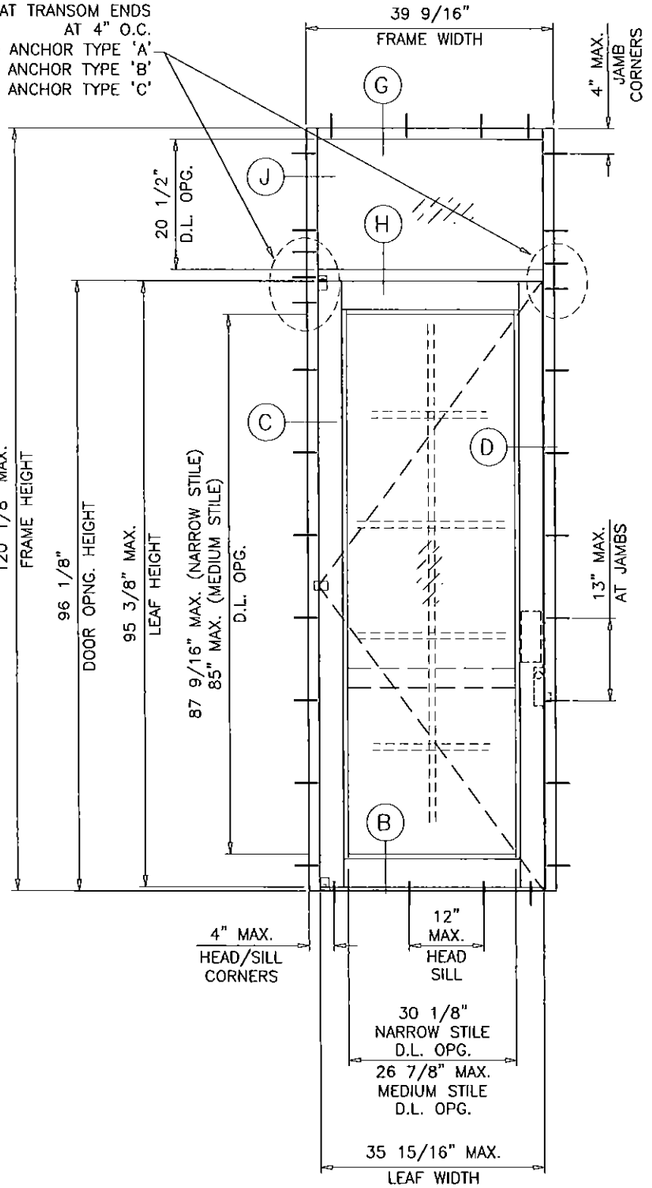

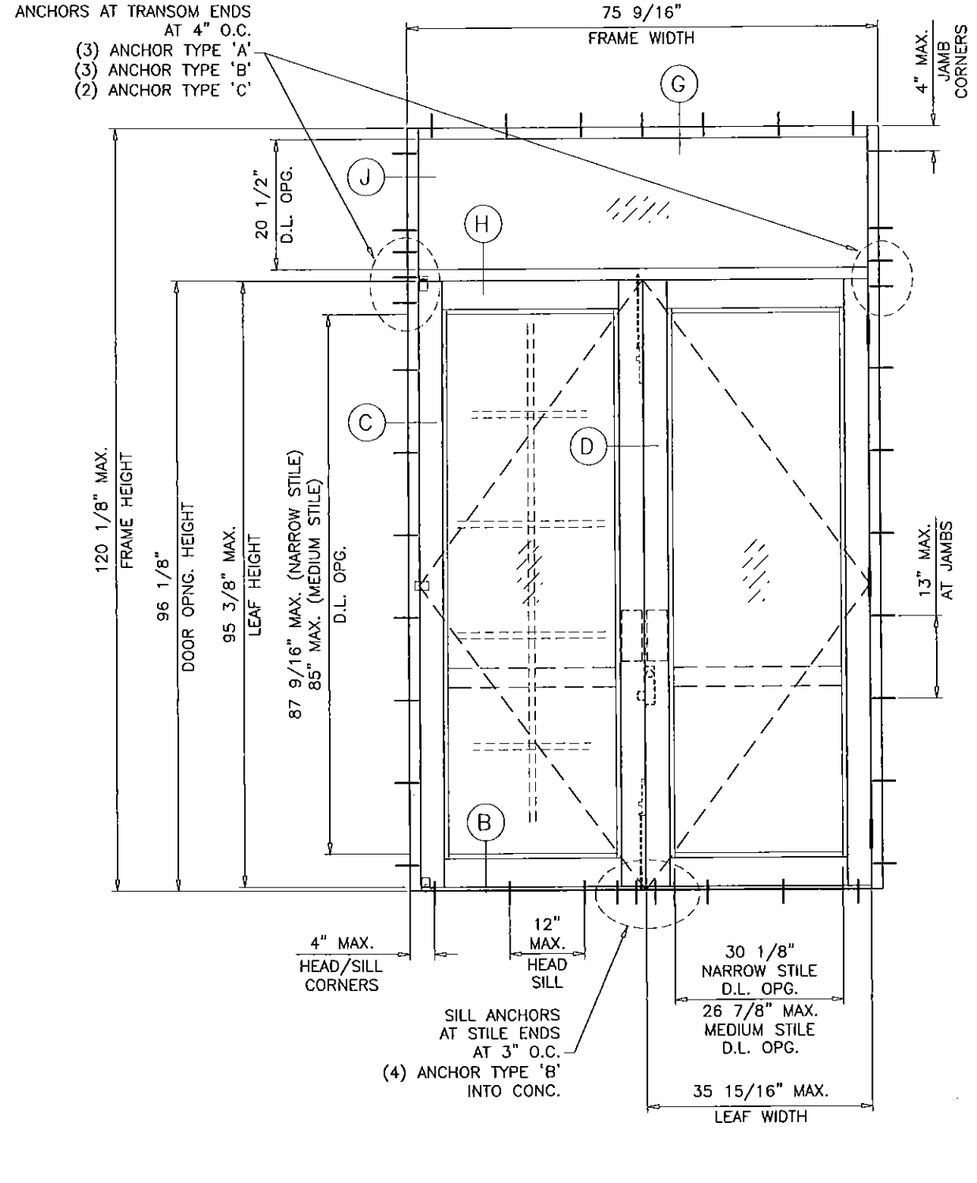

PRODUCT REVISED
as complying with the Florida
Building Code
Acceptance No. 14-1022.06
Expiration Date 10/26/16
By Ichang I. Chang
Miami Dade Product Control

Engr: JAVAD AHMAD
CIVIL
FLA. PE # 70592
C.A.N. 3638
MAY 21 2015

AL-FAROOQ CORPORATION
ENGINEERS & PRODUCT DEVELOPMENT
1235 S.W. 87 AVE
MIAMI, FLORIDA 33174
TEL. (305) 264-8100 FAX. (305) 262-6978
STORE\W05-12SM

SERIES MCKINLEY ALUM OUT-SWING ENTRANCE DOOR (N.I.)

Aldora Aluminum And Glass Products Inc.
11500 MIRAMAR PARKWAY SUITE 300
MIRAMAR, FL. 33025
TEL. (305) 888-6288 FAX. (305) 888-6289

revisions:			
no	date	by	description
E	08.28.13		GENERAL REVISION
F	01.23.14		GENERAL REVISION
G	09.29.14		UPDATED TO 2014 FBC
H	04.14.15		REV. PER RER COMMENTS
I	05.21.15		REV. PER RER COMMENTS

date: 03-03-05
scale: 1/2"=1'-0"
dr. by: HAMID
chk. by:

drawing no.
W05-12

sheet 2 of 7

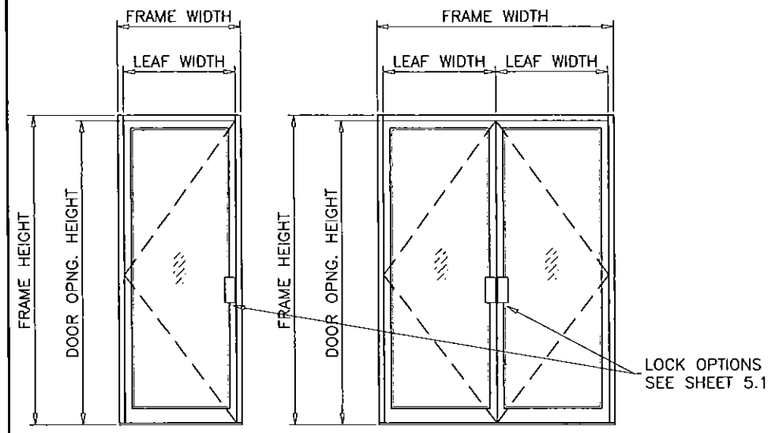

(X) (XX)

SINGLE OR DOUBLE ENTRANCE DOORS DESIGN LOAD CAPACITY - PSF								
NOMINAL DIMS.					LOCK OPTIONS 1 & 3		LOCK OPTION 2	
FRAME WIDTH (X)	FRAME WIDTH (XX)	LEAF WIDTH FT./IN.	DOOR OPNG. HT. FT./IN.	FRAME HEIGHT IN.	EXT.(+)	INT.(-)	EXT.(+)	INT.(-)
33-9/16	63-9/16	2/6	6/8	81-7/8	80.0	115.2	50.4	50.4
39-9/16	75-9/16	3/0			80.0	96.0	42.0	42.0
33-9/16	63-9/16	2/6	7/0	85-7/8	80.0	109.7	48.0	48.0
39-9/16	75-9/16	3/0			80.0	91.4	40.0	40.0
33-9/16	63-9/16	2/6	7/6	91-7/8	80.0	96.1	44.8	44.8
39-9/16	75-9/16	3/0			80.0	83.0	37.3	37.3
33-9/16	63-9/16	2/6	8/0	97-7/8	80.0	81.8	42.0	42.0
39-9/16	75-9/16	3/0			70.9	70.9	35.0	35.0

FOR LOCK OPTION DESCRIPTION SEE SHEET 5

NOTE:
GLASS CAPACITIES ON THIS SHEET ARE
BASED ON ASTM E1300-09 (3 SEC. GUSTS)
AND FLORIDA BUILDING COMMISSION
DECLARATORY STATEMENT DCA05-DEC-219

APPLICABLE EGRESS REQUIREMENTS TO BE REVIEWED BY AHJ.

NOTE:
GLASS CAPACITIES ON THIS SHEET ARE
BASED ON ASTM E1300-09 (3 SEC. GUSTS)
AND FLORIDA BUILDING COMMISSION
DECLARATORY STATEMENT DCA05-DEC-219

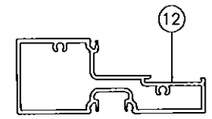

TRANSOM BAR
HORIZONTAL MULLION
WITHOUT REINF.

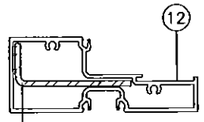

TRANSOM BAR
HORIZONTAL MULLION
WITH REINF.

SINGLE OR DOUBLE DOOR HORIZONTAL MULLION (TRANSOM BAR) DESIGN LOAD CAPACITY - PSF					
NOMINAL DIMS.				HORIZONTAL WITHOUT REINF.	HORIZONTAL WITH REINF.
FRAME WIDTH (X) IN.	FRAME WIDTH (XX) IN.	DOOR HEIGHT INCHES	TRANSOM HEIGHT INCHES	EXT. (+) INT. (-)	EXT. (+) INT. (-)
33-9/16	63-9/16	80	24	60.0	60.0
39-9/16	75-9/16		24	54.1	54.9
33-9/16	63-9/16	84	24	60.0	60.0
39-9/16	75-9/16		24	52.1	52.9
33-9/16	63-9/16	90	24	60.0	60.0
39-9/16	75-9/16		24	49.3	50.1
33-9/16	63-9/16	96	24	60.0	60.0
39-9/16	75-9/16		24	46.9	47.6

PRODUCT REVISED
as complying with the Florida
Building Code
Acceptance No. 14-1022.06
Expiration Date 10/26/16
By
Miami Dade Product Control

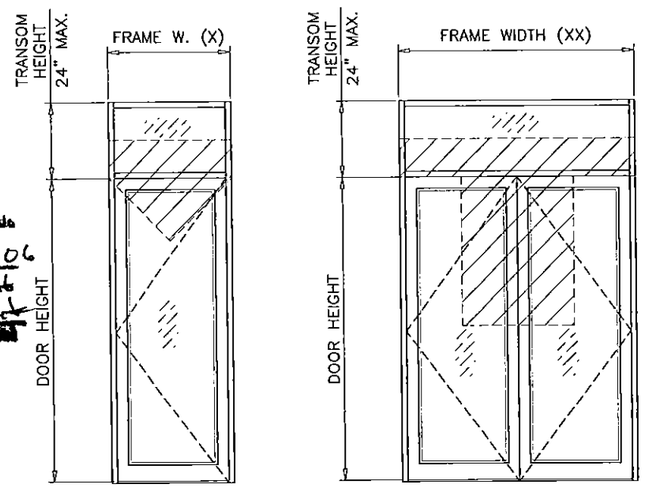

(O/X) (O/XX)

NOTE:
FOR DOORS CAPACITY SEE CHART LEFT.
FOR HORIZONTAL MULLION CAPACITY SEE CHART ABOVE.
LOWER VALUES FROM DOORS OR HORIZONTAL MULLION CHART
WILL APPLY TO ENTIRE SYSTEM.

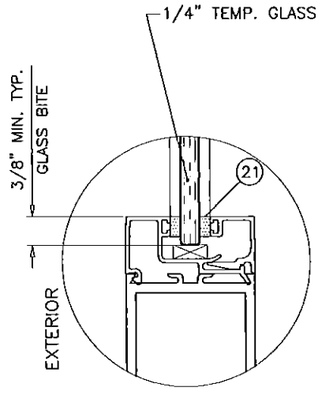

GLAZING DETAIL
DOOR LEAF

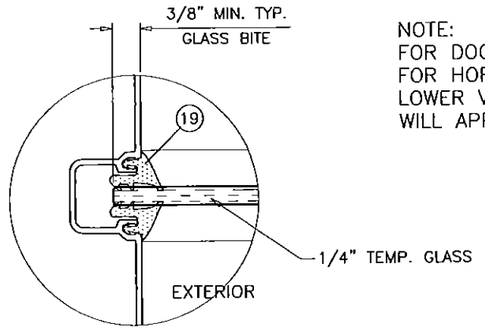

GLAZING DETAIL
TRANSOM LITE

Engr: JAVAD AHMAD
CIVIL
FLA. PE # 70592
C.A.N. 3538
MAY 21 2015

AL-FAROOQ CORPORATION
ENGINEERS & PRODUCT DEVELOPMENT
1235 S.W. 87 AVE
MIAMI, FLORIDA 33174
TEL. (305) 264-8100 FAX. (305) 262-6978

STORE W05-12SM

SERIES MCKINLEY ALUM OUT-SWING ENTRANCE DOOR (N.I.)

Aldora Aluminum And Glass Products Inc.
11500 MIRAMAR PARKWAY SUITE 300
MIRAMAR, FL. 33025
TEL. (305) 888-6288 FAX. (305) 888-6289

revisions:			
no	date	by	description
E	08.28.13		GENERAL REVISION
F	01.23.14		GENERAL REVISION
G	09.29.14		UPDATED TO 2014 FBC
H	04.14.15		REV. PER RER COMMENTS
I	05.21.15		REV. PER RER COMMENTS

date: 03-03-05
scale: 1/2"=1'-0"
dr. by: HAMID
chk. by:

drawing no.
W05-12

sheet 2.1 of 7

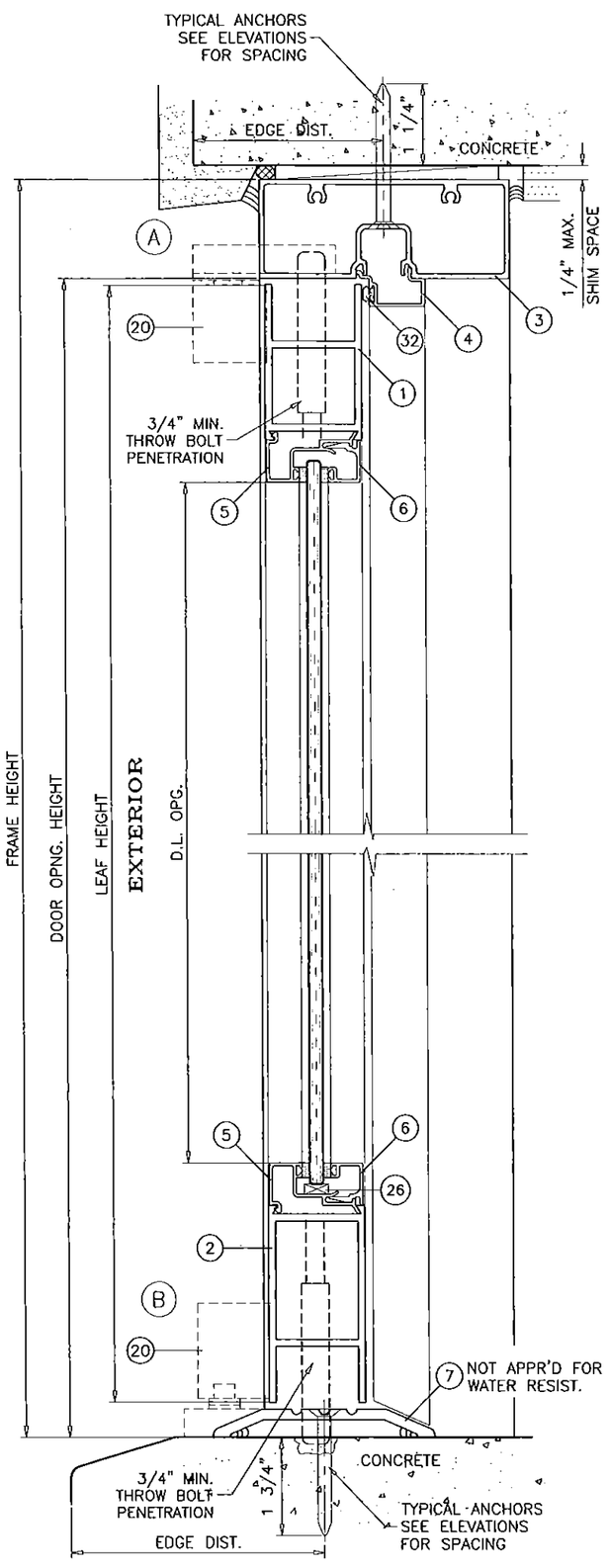

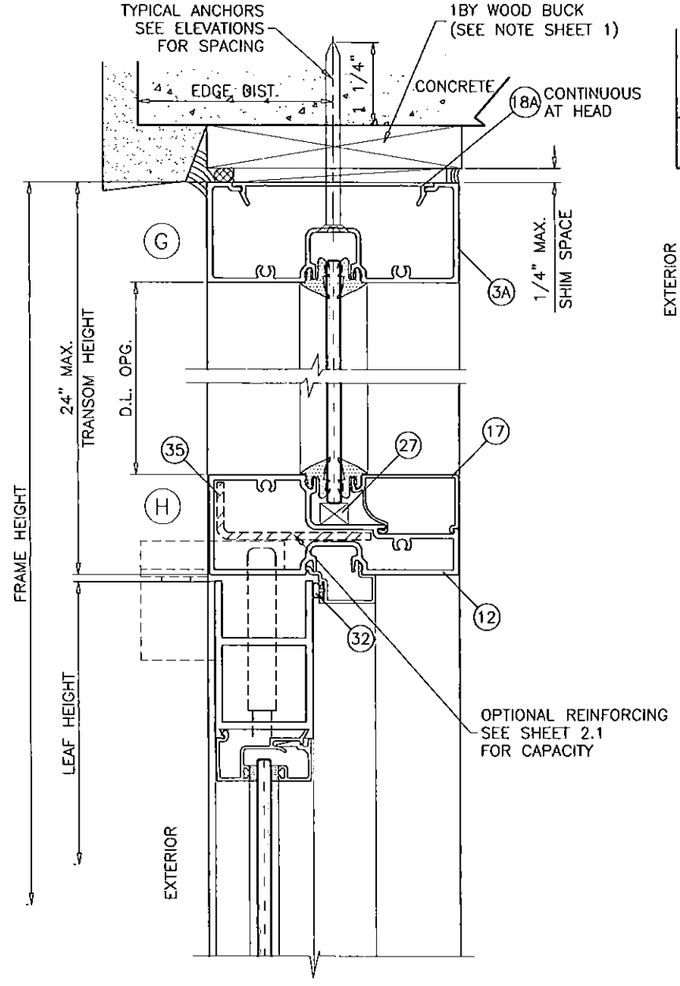

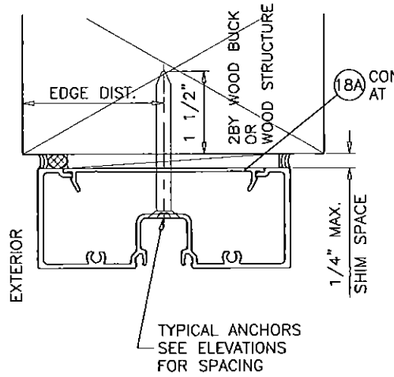

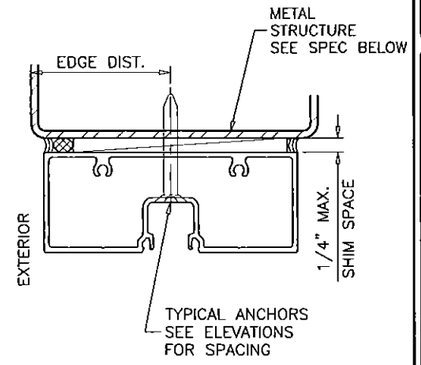

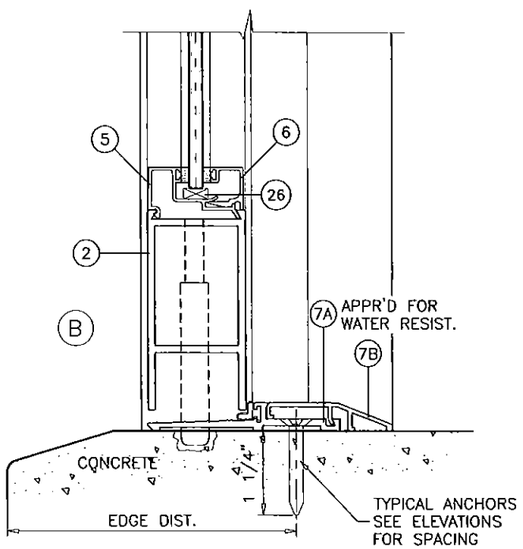

1BY OR 2BY WOOD BUCKS AND METAL STRUCTURE NOT BY 'ALDORA ALUMINUM AND GLASS PRODUCTS' MUST SUSTAIN LOADS IMPOSED BY GLAZING SYSTEM AND TRANSFER THEM TO THE BUILDING STRUCTURE.

TYPICAL ANCHORS: SEE ELEV. FOR SPACING

TYPE 'A'– 1/4" DIA. ULTRACON BY 'ELCO' (Fu=177 KSI, Fy=155 KSI)
INTO 2BY WOOD BUCKS OR WOOD STRUCTURES
1–1/2" MIN. PENETRATION INTO WOOD (HEAD/JAMBS)
THRU 1BY BUCKS INTO CONC. OR MASONRY
1–1/4" MIN. EMBED INTO CONCRETE (HEAD)
1–1/4" MIN. EMBED INTO CONC. OR MASONRY (JAMBS)

TYPE 'B'– 1/4" DIA. ULTRACON BY 'ELCO' (Fu=177 KSI, Fy=155 KSI)
DIRECTLY INTO CONC. OR MASONRY
1–1/4" MIN. EMBED INTO CONCRETE (HEAD)
1–3/4" MIN. EMBED INTO CONCRETE (SILL)
1–1/4" MIN. EMBED INTO CONC. OR MASONRY (JAMBS)

TYPE 'C'– 1/4" DIA. TEKS OR SELF DRILLING SCREWS (HEAD/JAMBS) (GRADE 5 CRS)
INTO MIAMI–DADE COUNTY APPROVED MULLIONS (MIN. THK. = 1/8")
INTO METAL STRUCTURES
STEEL : 1/8" THK. MIN. (Fy = 36 KSI MIN.)
ALUMINUM : 1/8" THK. MIN. (6063–T5 MIN.)
(STEEL IN CONTACT WITH ALUMINUM TO BE PLATED OR PAINTED)

TYPICAL EDGE DISTANCE
INTO CONCRETE AND MASONRY = 2–1/2" MIN.
INTO WOOD STRUCTURE = 1" MIN.
INTO METAL STRUCTURE = 3/4" MIN.

PRODUCT REVISED as complying with the Florida Building Code Acceptance No. 14-1027.06 Expiration Date 10/26/16
By Miami Dade/Product Control

WOOD AT HEAD OR JAMBS SG = 0.55 MIN.
CONCRETE AT HEAD, SILL OR JAMBS f'c = 3000 PSI MIN.
C–90 HOLLOW/FILLED BLOCK AT JAMBS f'm = 2000 PSI MIN.

Engr: JAVAD AHMAD
CIVIL
FLA. PE # 70592
C.A.N. 3538
MAY 27 2015

AL-FAROOQ CORPORATION
ENGINEERS & PRODUCT DEVELOPMENT
1235 S.W. 87 AVE
MIAMI, FLORIDA 33174
TEL. (305) 264-8100 FAX. (305) 262-6978

STORE\W05–12SM

SERIES MCKINLEY ALUM OUT-SWING ENTRANCE DOOR (N.I.)

Aldora Aluminum And Glass Products Inc.
11500 MIRAMAR PARKWAY SUITE 300
MIRAMAR, FL. 33025
TEL. (305) 888-6288 FAX. (305) 888-6289

revisions:			
no	date	by	description
E	08.28.13		GENERAL REVISION
F	01.23.14		GENERAL REVISION
G	09.29.14		UPDATED TO 2014 FBC
H	04.14.15		REV. PER RER COMMENTS
I	05.21.15		REV. PER RER COMMENTS

date: 03-03-05
scale: 3/8" = 1"
dr. by: HAMID
chk. by:

drawing no.
W05–12

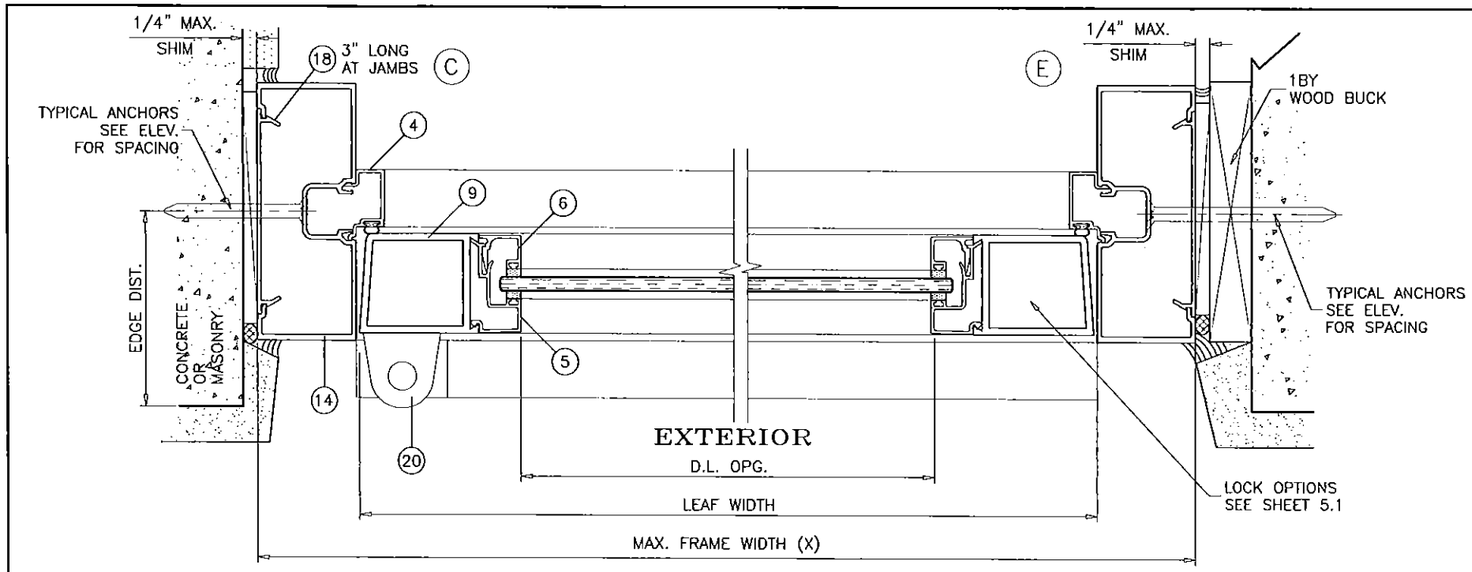

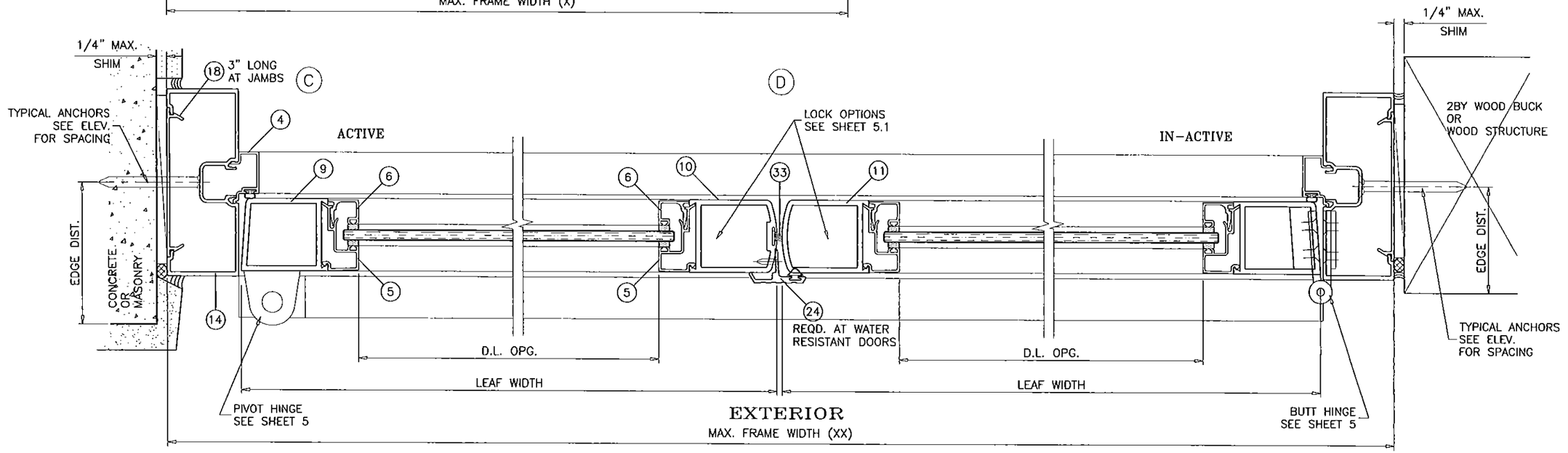

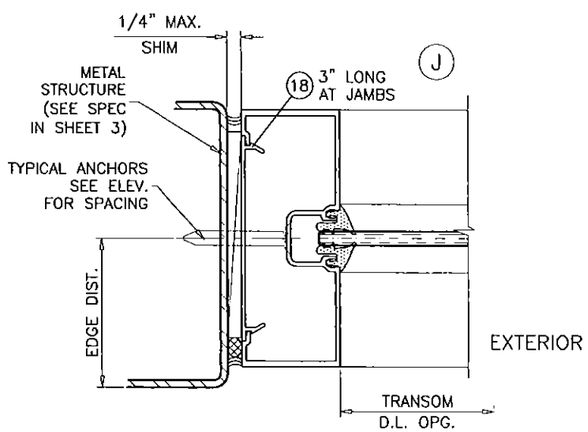

NARROW STILES DOORS SHOWN
MEDIUM STILES OPTIONAL

PRODUCT REVISED
as complying with the Florida Building Code
Acceptance No. 14-1022.06
Expiration Date 10/26/16
By
Miami Dade Product Control

Engr: JAVAD AHMAD
CIVIL
FLA. PE # 70592
C.A.N. 3538
MAY 21 2015

afc
AL-FAROOQ CORPORATION
ENGINEERS & PRODUCT DEVELOPMENT
1235 S.W. 87 AVE
MIAMI, FLORIDA 33174
TEL. (305) 264-8100 FAX. (305) 262-6978
STORE\W05-12SM

SERIES MCKINLEY ALUM OUT-SWING ENTRANCE DOOR (N.I.)

Aldora Aluminum And Glass Products Inc.
11500 MIRAMAR PARKWAY SUITE 300
MIRAMAR, FL. 33025
TEL. (305) 888-6288 FAX. (305) 888-6289

revisions:	no	date	by	description
	E	08.28.13		GENERAL REVISION
	F	01.23.14		GENERAL REVISION
	G	08.29.14		NO CHANGE THIS SHEET
	H	04.14.15		REV. PER RER COMMENTS
	I	05.21.15		REV. PER RER COMMENTS

date: 03-03-05
scale: 3/8" = 1"
dr. by: HAMID
chk. by:

drawing no.
W05-12

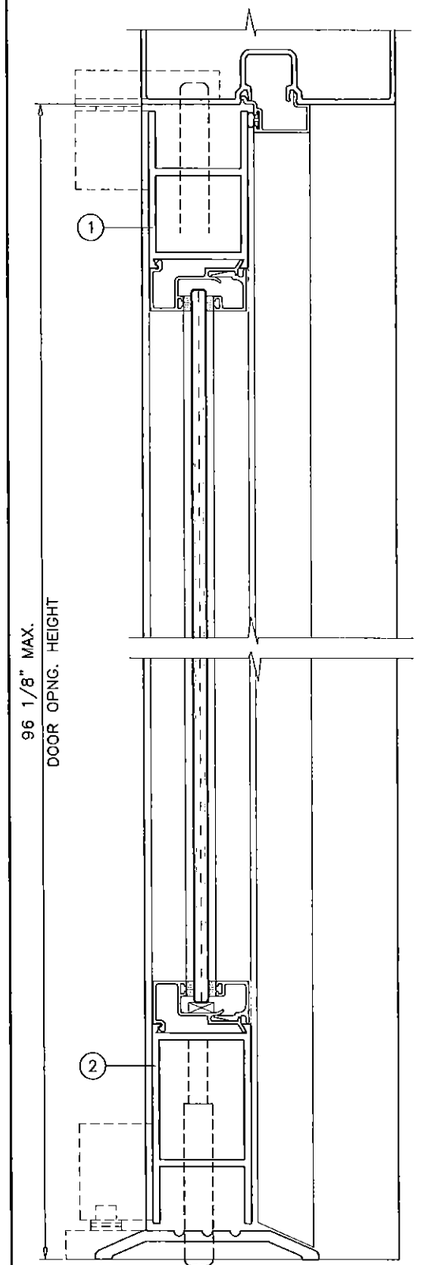

NARROW STILE DOOR

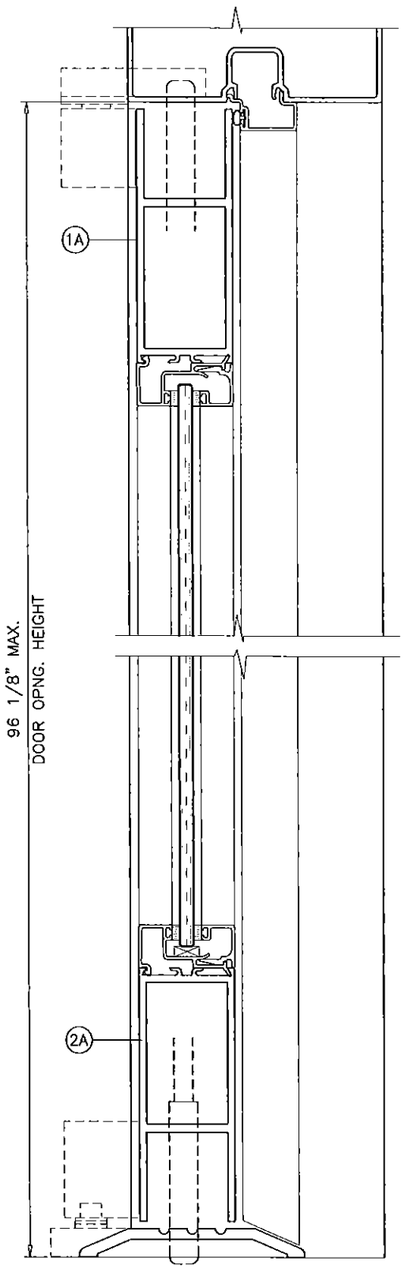

MEDIUM STILE DOOR

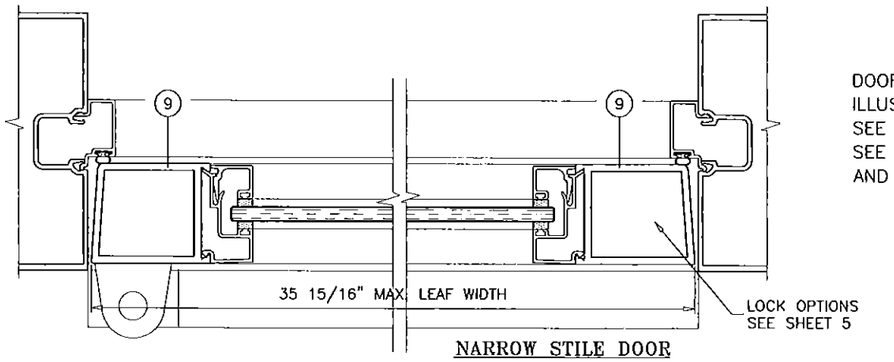

NARROW STILE DOOR
SINGLE DOOR (X)

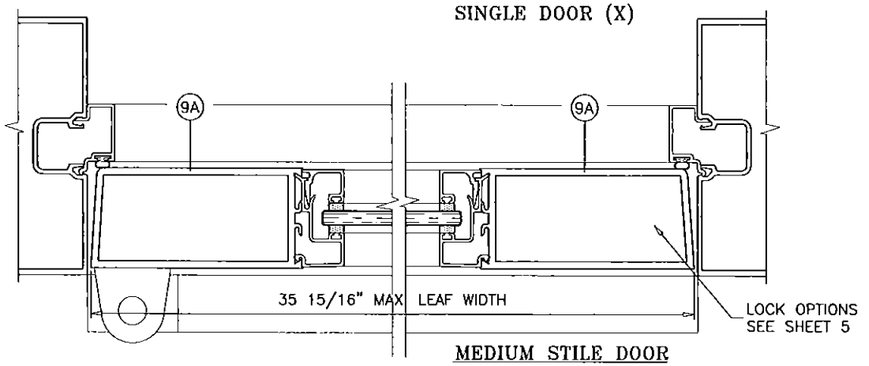

MEDIUM STILE DOOR
SINGLE DOOR (X)

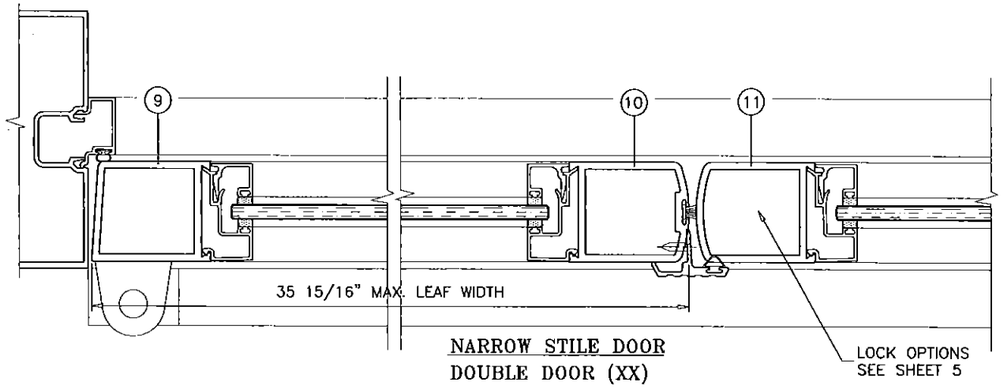

NARROW STILE DOOR
DOUBLE DOOR (XX)

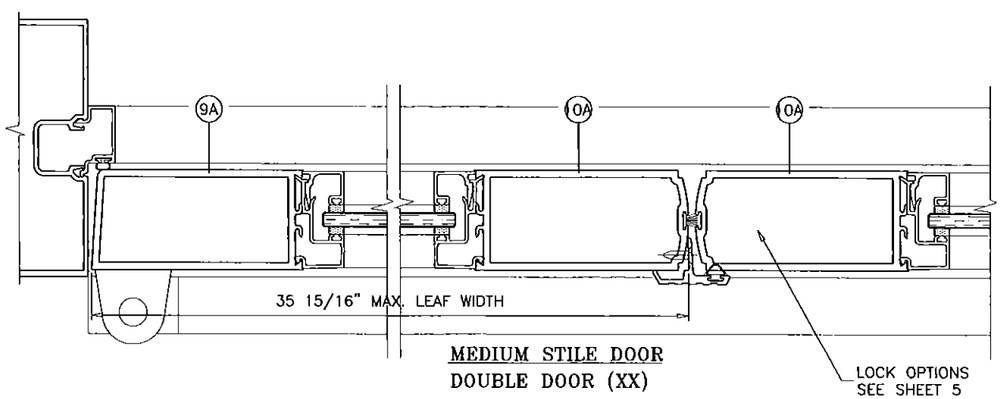

MEDIUM STILE DOOR
DOUBLE DOOR (XX)

DOOR STILES AND RAILS SHOWN FOR ILLUSTRATION ONLY.
SEE SHEETS 1 & 2 FOR MAX. SIZES.
SEE SHEETS 3 AND 4 FOR DOOR DETAILS AND INSTALLTION ANCHORS.

PRODUCT REVISED
as complying with the Florida
Building Code
Acceptance No. 14-1022.06
Expiration Date 10/26/16
By _____
Miami Dade Product Control

Engr: JAVAD AHMAD
CIVIL
FLA. PE # 70592
C.A.N. 3538
MAY 21 2015

AL-FAROOQ CORPORATION
ENGINEERS & PRODUCT DEVELOPMENT
1235 S.W. 87 AVE
MIAMI, FLORIDA 33174
TEL. (305) 264-8100 FAX. (305) 262-6978

STORE\W05-12SM

SERIES MCKINLEY ALUM OUT-SWING ENTRANCE DOOR (N.I.)

Aldora Aluminum And Glass Products Inc.
11500 MIRAMAR PARKWAY SUITE 300
MIRAMAR, FL. 33025
TEL. (305) 888-6288 FAX. (305) 888-6289

revisions:

no	date	by	description
F	01.23.14		GENERAL REVISION
G	09.29.14		NO CHANGE THIS SHEET
H	04.14.15		REV. PER RER COMMENTS
I	05.21.15		NO CHANGE THIS SHEET

date: 03-03-05
scale: 3/8" = 1"
dr. by: HAMID
chk. by:

drawing no.
W05-12

sheet 4.1 of 7

ITEM #	PART #	QUANTITY	DESCRIPTION	MATERIAL	MANF./SUPPLIER/REMARKS
1	SMI-100	1/ LEAF	TOP RAIL NARROW STILE)	6063-T5	-
1A	BCE-3304	1/ LEAF	TOP RAIL (MEDIUM STILE)	6063-T5	-
2	SMI-101	1/ LEAF	BOTTOM RAIL (NARROW STILE)	6063-T5	-
2A	BCE-3304	1/ LEAF	BOTTOM RAIL (MEDIUM STILE)	6063-T5	-
3	SMI-111	1/ PAIR	FRAME HEAD	6063-T6	-
3A	SMI-113	1/ PAIR	FRAME HEAD	6063-T6	-
4	SMI-112	3/ PAIR	DOOR STOP	6063-T5	-
5	SMI-106	4/ LEAF	EXTERIOR GLASS STOP	6063-T5	-
6	SMI-107	4/ PAIR	INTERIOR GLASS STOP	6063-T5	-
7	SMI-109	1/ DOOR	SADDLE THRESHOLD	6063-T5	-
7A	SMI-023	1/ DOOR	BUMPER THRESHOLD	6063-T5	-
7B	SMI-024	1/ DOOR	THRESHOLD COVER	6063-T6	-
8	SMI-105	4/ LEAF	SHEAR BLOCK	6063-T5	-
9	SMI-102	1/ PAIR	HINGE STILE (NARROW STILE)	6063-T5	-
9A	BCE-3315	1/ PAIR	HINGE STILE (MEDIUM STILE)	6063-T5	-
10	SMI-103	1	ACTIVE STILE (NARROW STILE)	6063-T5	-
10A	BCE-3316	1	ACTIVE/INACTIVE STILE (MEDIUM STILE)	6063-T5	-
11	SMI-104	1	INACTIVE STILE (NARROW STILE)	6063-T5	-
12	SMI-115	AS REQ.	TRANSOM HEAD	6063-T6	-
14	SMI-110	AS REQ.	VERTICAL/JAMB	6063-T6	-
17	SMI-116	AS REQ.	GLASS STOP	6063-T5	-
18	SMI-118	AS REQ.	SNAP-IN COVER, 3" LONG AT ANCHOR LOCATIONS	6063-T6	-
18A	SMI-118	AS REQ.	SNAP-IN COVER	6063-T6	-
19	SMI-G01	AS REQ.	WEDGE-IN GASKET, DUROMETER 70±5	NEOPRENE	UNIVERSAL RUBBER CO.
20	4307	SET/ LEAF	PIVOTS	6063-T5	REGENT
21	SMI-G03	AS REQ.	GLAZING TAPE	FOAM	FRANK LOWE RUBBER
22	SMI-031	1/ PAIR	FLUSH BOLT GUIDE REINFORCEMENT	6063-T5	-
24	SMI-030	AS REQD.	ASTRAGAL STILE	6063-T5	-
26	-	2/ LITE	SETTING BLOCK (DOOR), DUROMETER 83±5 SHORE A	NEOPRENE	3/16" X 1/2" X 1" LONG
27	-	2/ LITE	SETTING BLOCK (TRANSOM), DUROMETER 83±5 SHORE A	NEOPRENE	3/8" X 3/4" X 1-7/8" LONG
29	#12 X 1-1/2"	AS REQD.	FRAME ASSEMBLY SCREWS	-	S.M.S.
30	12-24 X 1/2"	4/ HASP	HINGE INSTALLATION SCREWS	-	F.H. MACHINE SCREWS
32	-	-	BULB WEATHERSTRIPPING	VINYL	.375"H X .270 T-SLOT
33	-	-	PILE WITH FIN WEATHERSTRIPPING	-	ULTRAFAB
35	-	-	REINFORCING ANGLE	STEEL	1" X 2-3/4" X 1/8" THK.
37	-	2/ LEAF	FLUSH BOLT GUIDE CHANNEL	STEEL	3" LONG
38	-	2/ HINGE	HINGE REINFORCING PLATES	ALUMINUM	1-1/2" X 1/2" X 8" LONG

SEALANTS:

FRAME CORNERS, ASSEMBLY SCREWS AND HEADS OF ANCHOR SCREWS AT SILL TO BE SEALED WITH SEALER. LEAF JOINTS SEALED WITH SILICONE.

PRODUCT REVISED
as complying with the Florida
Building Code
Acceptance No 14-1022.06
Expiration Date 10/26/16
By [signature]
Miami Dade Product Control

HINGES:

OPTION #1:

4-1/2 X 4" TWO PIECE STAINLESS STEEL BUTT HINGES AT 8" FROM TOP AND BOTTOM AND 40" O.C. MAX.

OPTION #2:

CAST ALUMINUM PIVOT HINGES AT TOP AND BOTTOM AND AT MIDSPAN OF LEAF.

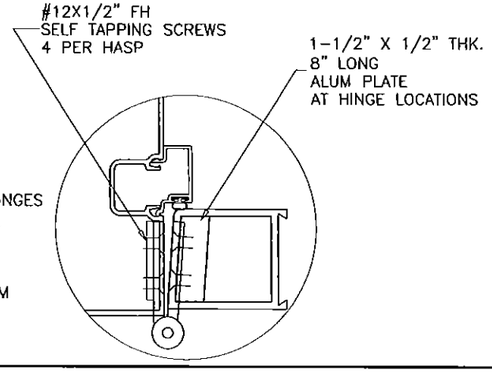

Engr: JAVAD AHMAD
CIVIL
FLA. PE # 70592
C.A.N. 3538
MAY 21 2015

AL-FAROOQ CORPORATION
ENGINEERS & PRODUCT DEVELOPMENT
1235 S.W. 87 AVE
MIAMI, FLORIDA 33174
TEL. (305) 264-8100 FAX. (305) 262-6978

STORE\W05-12SM

SERIES MCKINLEY ALUM OUT-SWING ENTRANCE DOOR (N.I.)

Aldora Aluminum And Glass Products Inc.
11500 MIRAMAR PARKWAY SUITE 300
MIRAMAR, FL. 33025
TEL. (305) 888-6288 FAX. (305) 888-6289

revisions:

no	date	by	description
E	08.28.13		GENERAL REVISION
F	01.23.14		GENERAL REVISION
G	09.29.14		NO CHANGE THIS SHEET
H	04.14.15		REV. PER RER COMMENTS
I	05.21.15		REV PER RER COMMENTS

date: 03-03-05
scale: 3/8" = 1"
dr. by: HAMID
chk. by:

drawing no.
W05-12

sheet 5 of 7

LOCK OPTIONS:

OPTION 1:

ACTIVE LEAF:
THREE POINT LOCK SYSTEM WITH 5 PLY HOOK LOCK BOLT REGENT 2222, KEY OPERATED ON EXTERIOR AND THUMB-TURN ON INTERIOR, LOCATED AT 31-3/4" FROM BOTTOM OF PANEL

INACTIVE LEAF:
MANUALLY OPERATED FLUSH EXTENSION BOLT SYSTEM REGENT #2509 WITH 3/8" DIA. BOLT.
A SPRING LOADED LEVER MECHANISM ON FACE OF DOOR AT 12" FROM EACH END

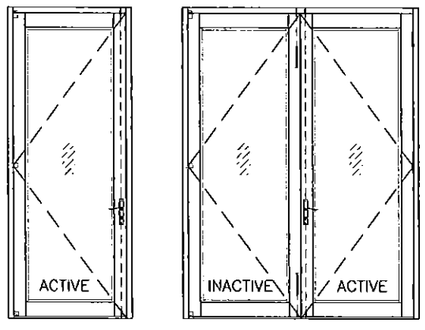

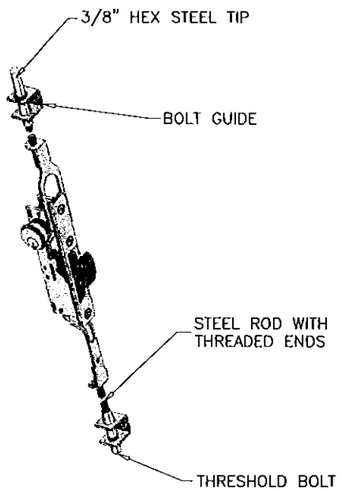

OPTION 2:

ACTIVE LEAF:
SINGLE POINT LOCK SYSTEM WITH 5 PLY HOOK LOCK BOLT REGENT 2333, KEY OPERATED ON EXTERIOR AND THUMB-TURN ON INTERIOR, LOCATED AT 31-3/4" FROM BOTTOM OF PANEL

INACTIVE LEAF:
MANUALLY OPERATED FLUSH EXTENSION BOLT SYSTEM REGENT #2509 WITH 3/8" DIA. BOLT.
A SPRING LOADED LEVER MECHANISM ON FACE OF DOOR AT 12" FROM EACH END

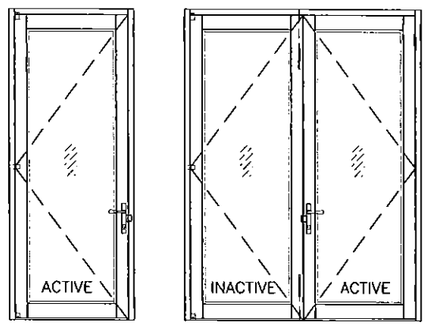

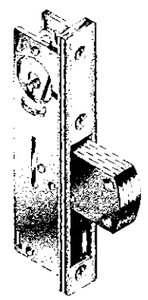

OPTION 3:

ACTIVE/INACTIVE LEAF:
REGENT SERIES 5770 TWO POINT CONCEALED VERTICAL ROD PANIC EXIT DEVICE WITH 5/8" THROW LATCH BOLT PENETRATING 3/4" AT HEAD AND SILL

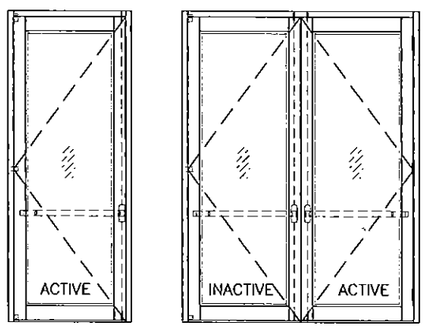

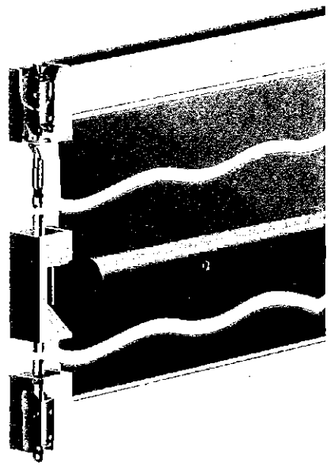

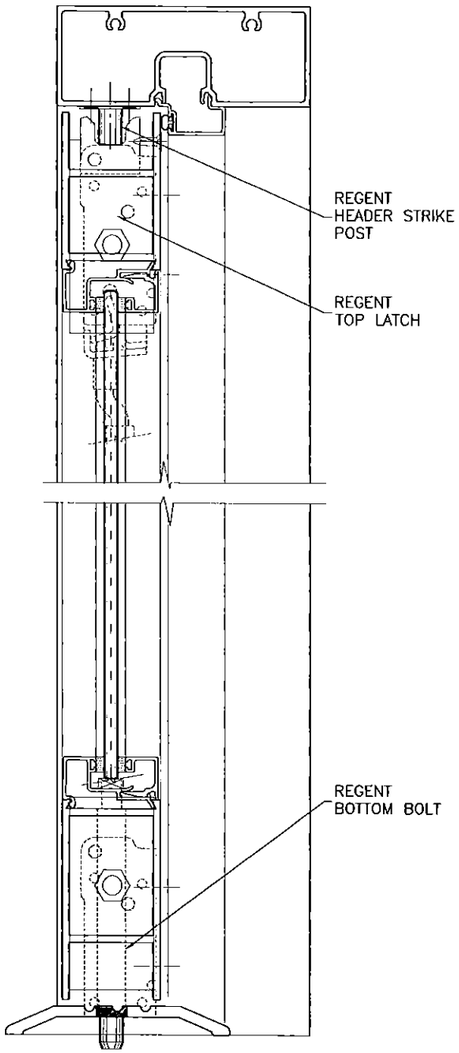

PRODUCT REVISED
as complying with the Florida
Building Code
Acceptance No. 14-1622.06
Expiration Date 10/26/16
By [signature]
Miami Dade Product Control

Engr: JAVAD AHMAD
CIVIL
FLA. PE # 70592
C.A.N. 3538
MAY 21 2015

AL-FAROOQ CORPORATION
ENGINEERS & PRODUCT DEVELOPMENT
1235 S.W. 87 AVE
MIAMI, FLORIDA 33174
TEL. (305) 264-8100 FAX. (305) 262-6978

STORE\W05-12SM

SERIES MCKINLEY ALUM OUT-SWING ENTRANCE DOOR (N.I.)

Aldora Aluminum And Glass Products Inc.
11500 MIRAMAR PARKWAY SUITE 300
MIRAMAR, FL. 33025
TEL. (305) 888-6288 FAX. (305) 888-6289

revisions:

no	date	by	description
1	05.21.15		REV. PER RER COMMENTS

date: 03-03-05
scale: 3/8" = 1"
dr. by: HAMID
chk. by:

drawing no.
W05-12

sheet 5.1 of 7

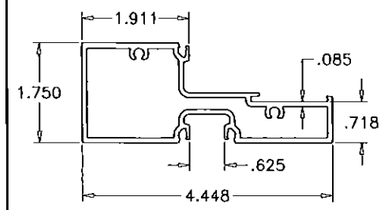

(12) TRANSOM HEAD

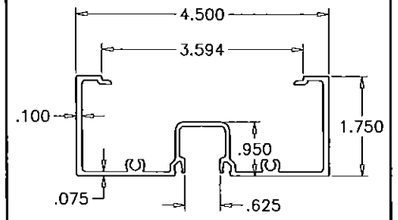

(3A) FRAME HEAD

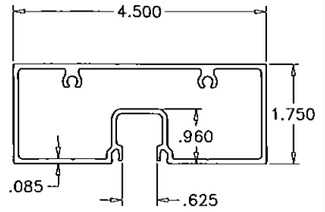

(3) FRAME HEAD

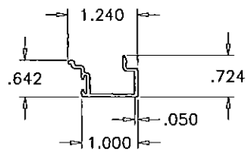

(4) DOOR STOP

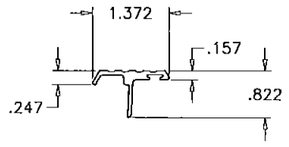

(24) ASTRAGAL STILE

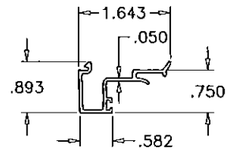

(5) EXTERIOR GLASS STOP

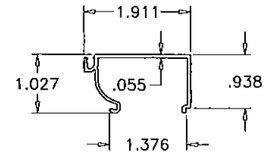

(17) GLAZING STOP

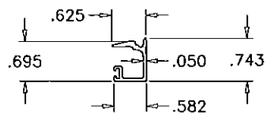

(6) INTERIOR GLASS STOP

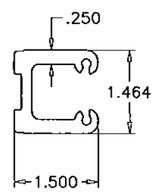

(8) SHEAR BLOCK

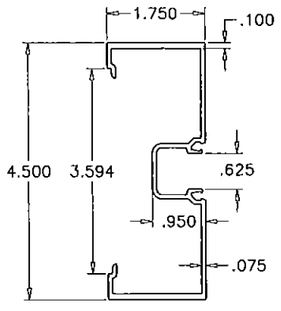

(14) FRAME JAMB

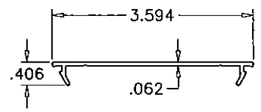

(18) (18A) SNAP-IN COVER

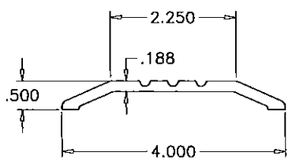

(7) SADDLE THRESHOLD

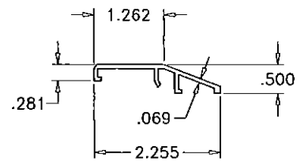

(7B) THRESHOLD COVER

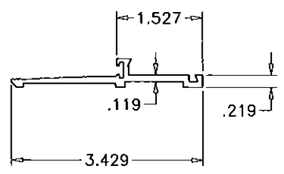

(7A) BUMPER THRESHOLD

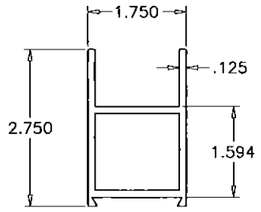

(1) TOP RAIL (NARROW STILE)

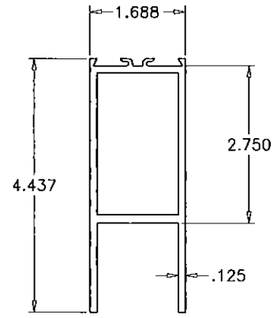

(1A) TOP RAIL (MEDIUM STILE)

(2A) BOTTOM RAIL (MEDIUM STILE)

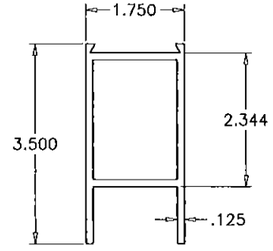

(2) BOTTOM RAIL (NARROW STILE)

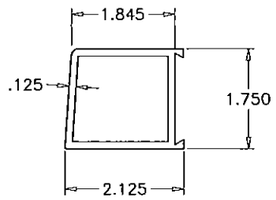

(9) HINGE/PIVOT STILE (NARROW STILE)

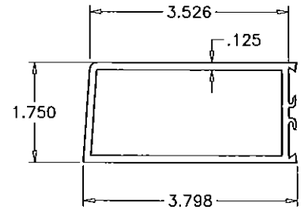

(9A) HINGE/PIVOT STILE (MEDIUM STILE)

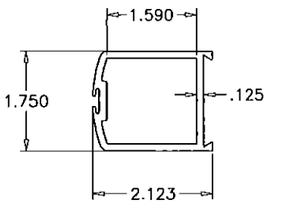

(10) ACTIVE LOCK STILE (NARROW STILE)

PRODUCT REVISED
as complying with the Florida
Building Code
Acceptance No 14-1022.06
Expiration Date 12/24/15
By
Miami Dade Product Control

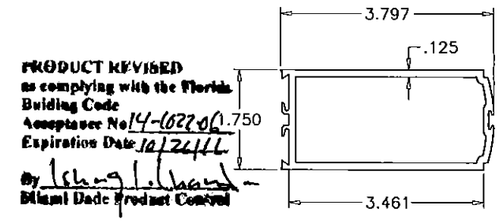

(10A) ACTIVE/INACTIVE LOCK STILE (MEDIUM STILE)

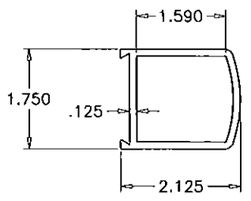

(11) INACTIVE LOCK STILE (NARROW STILE)

Engr: JAVAD AHMAD
CIVIL
FLA. PE # 70592
C.A.N. 3538
MAY 21 2015

AL-FAROOQ CORPORATION
ENGINEERS & PRODUCT DEVELOPMENT
1235 S.W. 87 AVE
MIAMI, FLORIDA 33174
TEL. (305) 264-8100 FAX. (305) 262-6978

STORE\W05-12SM

SERIES MCKINLEY ALUM OUT-SWING ENTRANCE DOOR (N.I.)

Aldora Aluminum And Glass Products Inc.
11500 MIRAMAR PARKWAY SUITE 300
MIRAMAR, FL. 33025
TEL. (305) 888-6288 FAX. (305) 888-6289

revisions:			
no	date	by	description
E	08.28.13		GENERAL REVISION
F	01.23.14		GENERAL REVISION
G	09.29.14		NO CHANGE THIS SHEET
H	04.14.15		NO CHANGE THIS SHEET
I	05.21.15		NO CHANGE THIS SHEET

date: 03-03-05
scale: 3/8" = 1"
dr. by: HAMID
chk. by:

drawing no.
W05-12

sheet 6 of 7

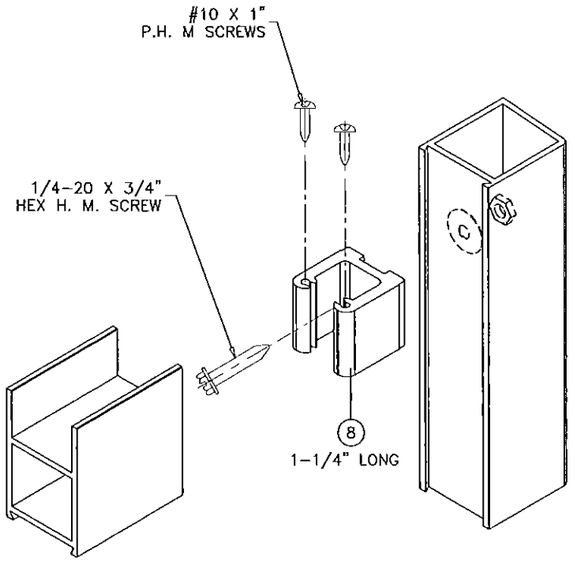

DOOR LEAF UPPER CORNER
(NARROW STILE)

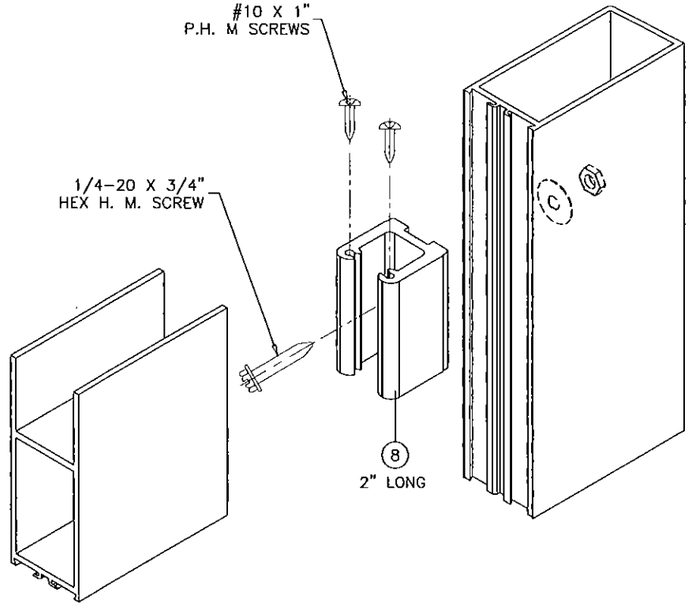

DOOR LEAF UPPER CORNER
(MEDIUM STILE)

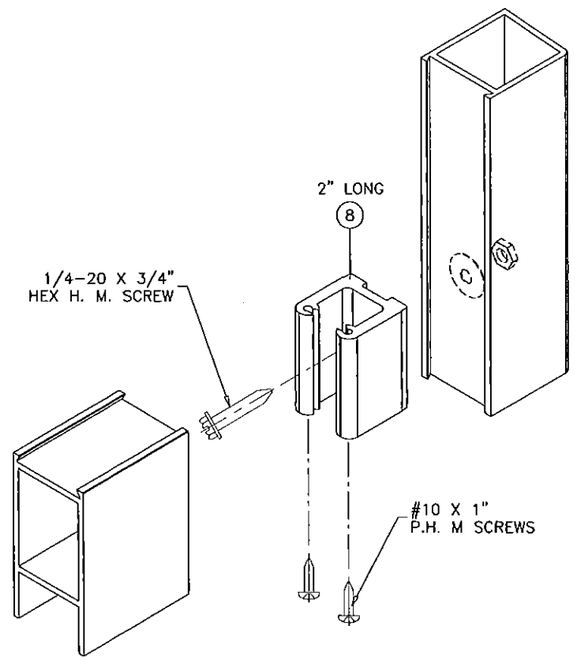

DOOR LEAF LOWER CORNER
(NARROW STILE)

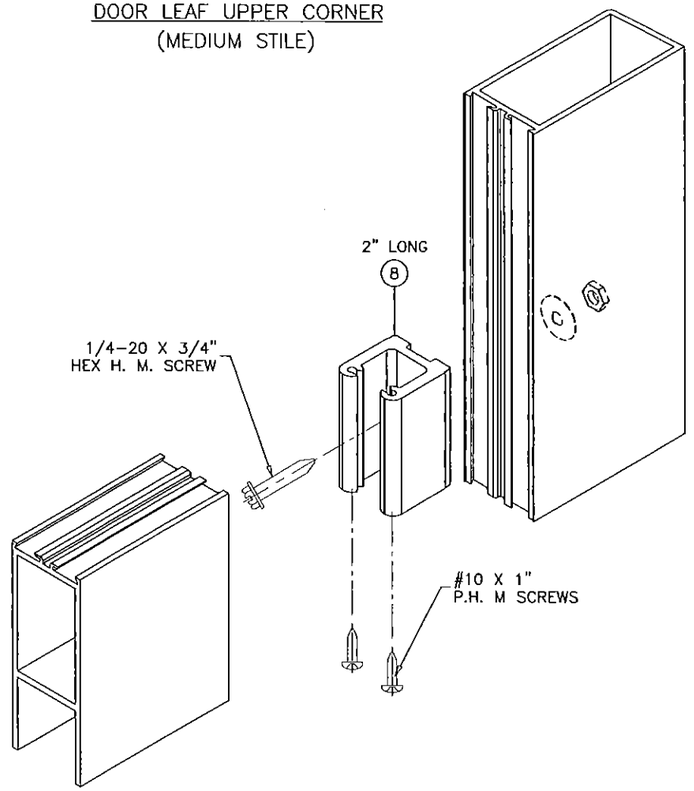

DOOR LEAF LOWER CORNER
(MEDIUM STILE)

PRODUCT REVISED
as complying with the Florida
Building Code
Acceptance No 14-1022.06
Expiration Date 10/26/16
By
Miami Dade Product Control

Engr: JAVAD AHMAD
CIVIL
FLA. PE # 70592
C.A.N. 3538
MAY 21 2015

AL-FAROOQ CORPORATION
ENGINEERS & PRODUCT DEVELOPMENT
1235 S.W. 87 AVE
MIAMI, FLORIDA 33174
TEL. (305) 264-8100 FAX. (305) 262-6978
STORE\W05-12SM

SERIES MCKINLEY ALUM OUT-SWING ENTRANCE DOOR (N.I.)

Aldora Aluminum And Glass Products Inc.
11500 MIRAMAR PARKWAY SUITE 300
MIRAMAR, FL. 33025
TEL. (305) 888-6288 FAX. (305) 888-6289

revisions:			
no	date	by	description
E	08.28.13		GENERAL REVISION
F	01.23.14		GENERAL REVISION
G	09.29.14		NO CHANGE THIS SHEET
H	04.14.15		NO CHANGE THIS SHEET
I	05.21.15		NO CHANGE THIS SHEET

date: 03-03-05
scale: 3/8" = 1"
dr. by: HAMID
chk. by:

drawing no.
W05-12

sheet 7 of 7

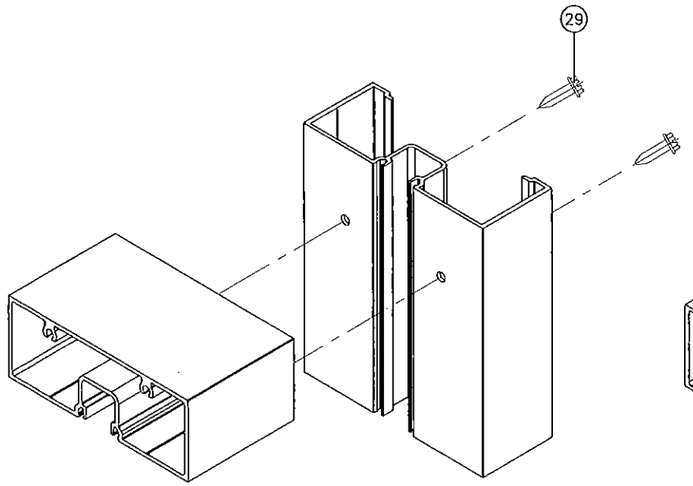

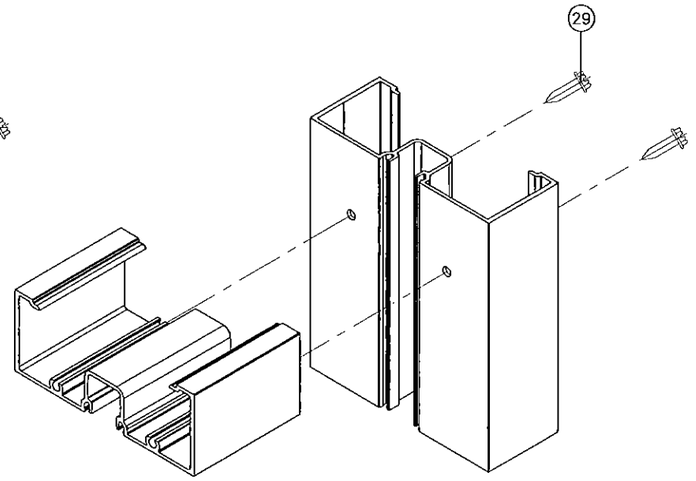

FRAME TOP CORNER

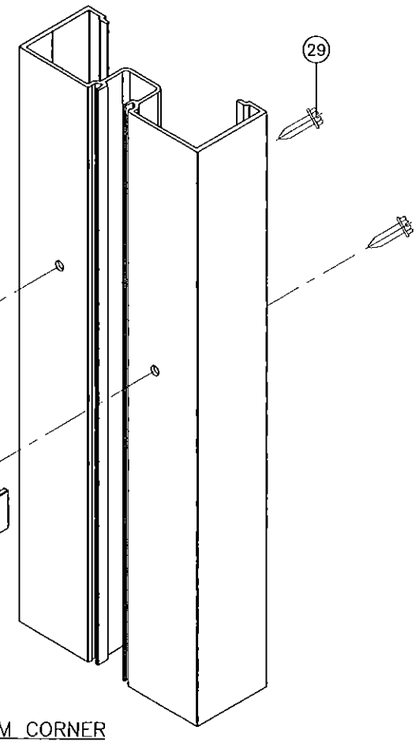

TRANSOM CORNER

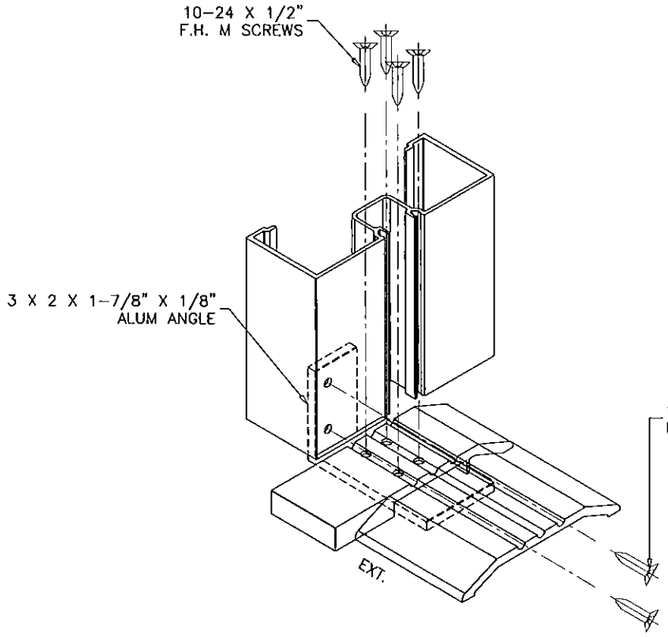

FRAME LOWER CORNER

PRODUCT REVISED
as complying with the Florida Building Code
Acceptance No 14-1022.06
Expiration Date 10/26/16
By [signature]
Miami Dade/Product Control

Engr: JAVAD AHMAD
CIVIL
FLA. PE # 70592
C.A.N. 3538

MAY 21 2015

AL-FAROOQ CORPORATION
ENGINEERS & PRODUCT DEVELOPMENT
1235 S.W. 87 AVE
MIAMI, FLORIDA 33174
TEL. (305) 264-8100 FAX. (305) 262-6978

STORE\W05-12SM

SERIES MCKINLEY ALUM OUT-SWING ENTRANCE DOOR (N.I.)

Aldora Aluminum And Glass Products Inc.
11500 MIRAMAR PARKWAY SUITE 300
MIRAMAR, FL. 33025
TEL. (305) 888-6288 FAX. (305) 888-6289

revisions:

no	date	by	description
F	01.23.14		GENERAL REVISION
G	09.29.14		NO CHANGE THIS SHEET
H	04.14.15		REV. PER RER COMMENTS
I	05.21.15		NO CHANGE THIS SHEET

date: 03-03-05
scale: 3/8" = 1"
dr. by: HAMID
chk. by:

drawing no.
W05-12

sheet 7.1 of 7