MIAMI-DADE COUNTY
DEPARTMENT OF REGULATORY AND ECONOMIC RESOURCES (RER)
BOARD AND CODE ADMINISTRATION DIVISION

MIAMI–DADE COUNTY, FLORIDA
PRODUCT CONTROL SECTION
11805 SW 26 Street, Room 208
T (786) 315–2590 F (786) 315–2599
www.miamidade.gov/economy

NOTICE OF ACCEPTANCE (NOA)

PGT Industries, Inc.
1070 Technology Drive,
Nokomis, Fl. 34275

SCOPE:

This NOA is being issued under the applicable rules and regulations governing the use of construction materials. The documentation submitted has been reviewed and accepted by Miami–Dade County RER–Product Control Section to be used in Miami–Dade County and other areas where allowed by the Authority Having Jurisdiction (AHJ).

This NOA shall not be valid after the expiration date stated below. The Miami–Dade County Product Control Section (In Miami–Dade County) and/ or the AHJ (in areas other than Miami–Dade County) reserve the right to have this product or material tested for quality assurance purposes. If this product or material fails to perform in the accepted manner, the manufacturer will incur the expense of such testing and the AHJ may immediately revoke, modify, or suspend the use of such product or material within their jurisdiction. RER reserves the right to revoke this acceptance, if it is determined by Miami–Dade County Product Control Section that this product or material fails to meet the requirements of the applicable building code.

This product is approved as described herein, and has been designed to comply with the Florida Building Code, including the High Velocity Hurricane Zone.

DESCRIPTION: Series "FD–650" Outswing Aluminum French Door w/ Sidelites – N.I.

APPROVAL DOCUMENT: Drawing No. **8000–12**, titled "Alum. French Door & Side Lites, Non–Impact", sheets 01 through 11 of 11, dated 12/23/04, with revision "**D**" dated 10/10/11, prepared by manufacturer, signed and sealed by Anthony Lynn Miller, P. E., bearing the Miami–Dade County Product Control Section Renewal stamp with the Notice of Acceptance number and Expiration date by the Miami–Dade County Product Control Section.

MISSILE IMPACT RATING: None

LABELING: Each unit shall bear a permanent label with the manufacturer's name or logo, city, state, series, and following statement: "Miami–Dade County Product Control Approved", unless otherwise noted herein.

REVISION of this NOA shall be considered after a renewal application has been filed and there has been no change in the applicable building code negatively affecting the performance of this product.

TERMINATION of this NOA will occur after the expiration date or if there has been a revision or change in the materials, use, and/ or manufacture of the product or process. Misuse of this NOA as an endorsement of any product, for sales, advertising or any other purposes shall automatically terminate this NOA. Failure to comply with any section of this NOA shall be cause for termination and removal of NOA.

ADVERTISEMENT: The NOA number preceded by the words Miami–Dade County, Florida, and followed by the expiration date may be displayed in advertising literature. If any portion of the NOA is displayed, then it shall be done in its entirety.

INSPECTION: A copy of this entire NOA shall be provided to the user by the manufacturer or its distributors and shall be available for inspection at the job site at the request of the Building Official.

This NOA **revises and renews NOA No. 11–1013.23** and consists of this page 1 and evidence pages E–1, E–2 and E–3, as well as approval document mentioned above.

The submitted documentation was reviewed by **Jaime D. Gascon, P. E.**

MIAMI-DADE COUNTY APPROVED

J. Gascon
2/11/15

NOTICE OF ACCEPTANCE: EVIDENCE SUBMITTED

A. DRAWINGS

1. Manufacturer's die drawings and sections.
   (Submitted under previous NOA No. 09–1028.09)
2. Drawing No. **8000–12**, titled "Alum. French Door & Side Lites, Non–Impact", sheets 01 through 11 of 11, dated 12/23/04, with revision "**D**" dated 10/10/11, prepared by manufacturer, signed and sealed by Anthony Lynn Miller, P. E.
   (Submitted under previous NOA No. 11–1013.23)

B. TESTS

1. Test reports on: 1) Air Infiltration Test, per FBC, TAS 202–94
   2) Uniform Static Air Pressure Test, Loading per FBC, TAS 202–94
   3) Water Resistance Test, per FBC, TAS 202–94
   4) Forced Entry Test, per FBC 2411.3.2.1, and TAS 202–94

   along with marked–up drawings and installation diagram of an aluminum doors of OXXO configuration, prepared by Fenestration Testing Laboratory, Inc., Test Report No. **FTL–5967**, dated 05/07/09, signed and sealed by Julio E. Gonzalez, P. E.
   (Submitted under previous NOA No. 09–1028.09)
2. Test reports on: 1) Air Infiltration Test, per FBC, TAS 202–94
   2) Uniform Static Air Pressure Test, Loading per FBC, TAS 202–94
   3) Water Resistance Test, per FBC, TAS 202–94
   4) Large Missile Impact Test per FBC, TAS 201–94
   5) Cyclic Wind Pressure Loading per FBC, TAS 203–94
   6) Forced Entry Test, per FBC 2411.3.2.1, and TAS 202–94

   along with marked–up drawings and installation diagram of an aluminum doors of OXXO configuration, prepared by Fenestration Testing Laboratory, Inc., Test Report No. **FTL–4921,** dated 07/17/06, signed and sealed by Edmundo J. Largaespada, P. E.
   (Submitted under previous NOA No. 05–0107.01)
3. Test reports on: 1) Air Infiltration Test, per FBC, TAS 202–94
   5) Uniform Static Air Pressure Test, Loading per FBC, TAS 202–94
   6) Water Resistance Test, per FBC, TAS 202–94
   7) Forced Entry Test, per FBC 2411.3.2.1, and TAS 202–94

   along with marked–up drawings and installation diagram of an aluminum doors of OXXO configuration, prepared by Fenestration Testing Laboratory, Inc., Test Reports No.'s **FTL–4450,** dated 12/14/04, **FTL–4451,** dated 12/14/04 and **FTL–4452,** dated 12/14/04, all signed and sealed by Edmundo J. Largaespada, P. E.
   (Submitted under previous NOA No. 05–0107.01)

Jaime D. Gascon, P. E.
Product Control Section Supervisor
NOA No. 14–1117.04
Expiration Date: March 24, 2020
Approval Date: February 19, 2015

NOTICE OF ACCEPTANCE: EVIDENCE SUBMITTED

B. CALCULATIONS

1. Anchor verification calculations and structural analysis, complying with **FBC 2010 and FBC 2014, 5th Edition**, prepared by manufacturer, dated 02/11/15, signed and sealed by A. Lynn Miller, P. E.
2. **Glazing complies with ASTM E1300–04/ 09**

D. QUALITY ASSURANCE

1. Miami–Dade Department of Regulatory and Economic Resources (RER).

E. MATERIAL CERTIFICATIONS

1. None.

F. STATEMENTS

1. Statement letter of conformance to **FBC–2010** and complying with **FBC 5th Edition (2014)**, issued by manufacturer, dated 11/06/14, signed and sealed by A. Lynn Miller, P. E.
2. Statement letter of no financial interest, issued by manufacturer, dated 11/06/14, signed and sealed by A. Lynn Miller, P. E.
3. Department of State Certification of **PGT INDUSTRIES, INC.** as a for profit corporation, active and organized under the laws of the State of Florida, dated 01/27/15 and filed by Ken Detzner, Secretary of State.
4. Statement letter of conformance to and complying with **FBC–2010**, issued by manufacturer, dated 10/11/11, signed and sealed by A. Lynn Miller, P. E.
   (Submitted under previous NOA No. 11–1013.23)
5. Statement letter of no financial interest, issued by manufacturer, dated 10/11/11, signed and sealed by A. Lynn Miller, P. E.
   (Submitted under previous NOA No. 11–1013.23)
6. Notification of Successor Engineer for manufacturer's NOA document per **Section 61G15–27.001** of the **Florida Administrative Code**, notifying original engineer that the successor engineer is assuming full professional and legal responsibility for all engineering documents pertaining to this NOA, dated 10/07/11, signed and sealed by A. Lynn Miller, P. E.
   (Submitted under previous NOA No. 11–1013.23)
7. Laboratory compliance letter for Test Report No. **FTL–5967**, issued by Fenestration Testing Laboratory, Inc., dated 05/07/09, signed and sealed by Julio E. Gonzalez, P. E.
   (Submitted under previous NOA No. 09–1028.09)
8. Proposal No. **08–1891** issued by Product Control, dated 01/26/09, signed by Ishaq Chanda, P. E.
   (Submitted under previous NOA No. 09–1028.09)

Jaime D. Gascon, P. E.
Product Control Section Supervisor
NOA No. 14–1117.04
Expiration Date: March 24, 2020
Approval Date: February 19, 2015

NOTICE OF ACCEPTANCE: EVIDENCE SUBMITTED

E. STATEMENTS (CONTINUED)

9. Laboratory compliance letters for Test Reports No.'s **FTL–4921,** dated 07/17/06, **FTL–4450,** dated 12/14/04, **FTL–4451,** dated 12/14/04 and **FTL–4452,** dated 12/14/04, all issued by Fenestration Testing Laboratory, Inc., all signed and sealed by Edmundo J. Largaespada, P. E.
(Submitted under previous NOA No. 05–0107.01)

G. OTHERS

1. Notice of Acceptance No. **11–1013.23**, issued to PGT Industries for their Series "FD–650" Outswing Aluminum French Door w/ Sidelites – N.I., approved on 11/24/11 and expiring on 03/24/15.

Jaime D. Gascon, P. E.
Product Control Section Supervisor
NOA No. 14–1117.04
Expiration Date: March 24, 2020
Approval Date: February 19, 2015

GENERAL NOTES: OUTSWING NON-IMPACT FRENCH DOOR(S) AND SIDE LITE(S)

1. GLAZING OPTIONS:
   A. 3/16" TEMPERED GLASS
   B. 7/8" I.G. GLASS CONSISTING OF (2) LITES OF 3/16" TEMPERED GLASS WITH A 1/2" AIR SPACE.

2. DESIGN PRESSURES: (SEE TABLES 1, 2 AND 3, SHEET 2)
   A. NEGATIVE DESIGN LOADS BASED ON TESTED PRESSURE AND GLASS TABLES ASTM E 1300-02.
   B. POSITIVE DESIGN LOADS BASED ON WATER TEST PRESSURE AND GLASS TABLES ASTM E 1300-02.

3. CONFIGURATIONS: X, O, XX, XO, OX, XXX, XXO, OXX, OXO, XXXX, XXXO, OXXX, OR OXXO WHERE O REPRESENTS EITHER THE NARROW JAMB OR FULL JAMB SIDE LITE.
   ANY TWO ADJACENT X UNITS CAN BE EITHER TWO SINGLE X DOORS OR A DOUBLE XX DOOR, BOTH USING EITHER THE STANDARD OR THE LOW-RISE SILL. THE FRENCH DOOR ASSEMBLY BEAM IS USED TO ASSEMBLE X, XX, AND O UNITS TO MAKE THE ABOVE CONFIGURATIONS.

4. ANCHORAGE: THE 33 1/3% STRESS INCREASE HAS NOT BEEN USED IN THE DESIGN OF THIS PRODUCT. FOR ANCHORAGE REQUIREMENTS SEE SHEETS 8 THROUGH 10.

5. SHUTTERS ARE REQUIRED WHERE IMPACT RESISTANCE REQUIRED. SHUTTERS MUST BE MIAMI-DADE COUNTY APPROVED FOR INSTALLATION IN MIAMI-DADE COUNTY.

6. SEALANTS: INSTALLATION SCREWS, FRAME AND PANEL CORNERS SEALED WITH CLEAR COLORED SEALANT. VERTICAL ASSEMBLY BEAM SEAMS SEALED ON THE INTERIOR AND EXTERIOR WITH CONTRACTOR SEALANT.

7. REFERENCES: TEST REPORTS FTL-4450, FTL-4451, FTL-4452, FTL-4921 AND FTL-5967.
   ANSI/AF&PA NDS-2005 FOR WOOD CONSTRUCTION
   ADM-2005 ALUMINUM DESIGN MANUAL

8. THIS PRODUCT HAS BEEN DESIGNED & TESTED TO COMPLY WITH THE REQUIREMENTS OF THE FLORIDA BUILDING CODE, INCLUDING THE HIGH VELOCITY HURRICANE ZONE (HVHZ).

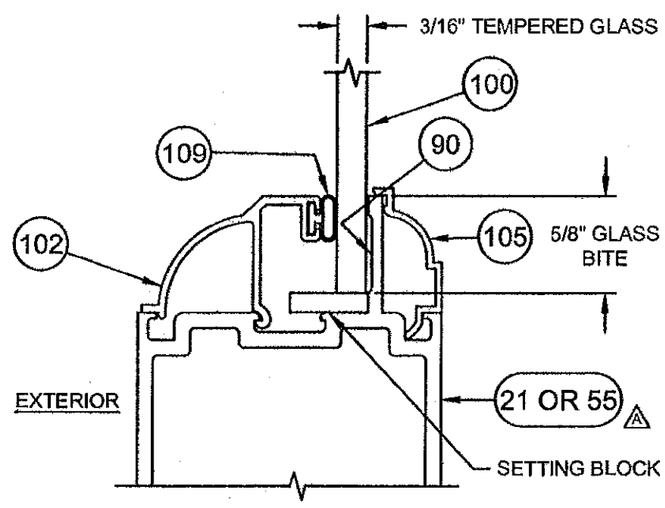

GLAZING DETAIL
MONOLITHIC GLASS

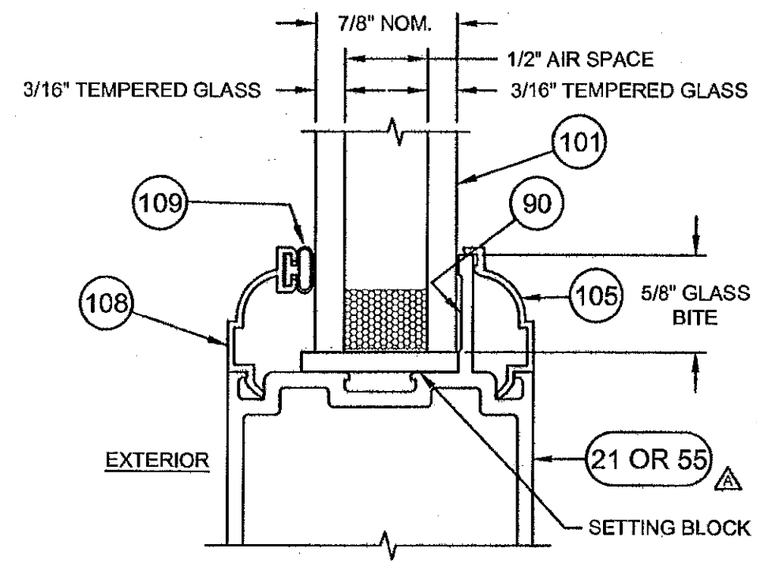

GLAZING DETAIL
I.G. GLASS

NOA DRAWING MAP

TOPIC	SHEET
GENERAL NOTES	1
CONFIGURATIONS	1
GLAZING DETAILS	1
DESIGN PRESSURES	2
ELEVATIONS	3
VERT. SECTIONS	4
HORIZ. SECTIONS	5
PARTS LIST	6
EXTRUSIONS	7-8
ANCHORAGE	9-11

PRODUCT REVIEWED
as complying with the Florida Building Code
Acceptance No 11-1013.23
Expiration Date March 24, 2015
By Manuel Cera
Miami Dade Product Control

PRODUCT RENEWED
as complying with the Florida Building Code
Acceptance No 14-1117.04
Expiration Date 03/24/2020
By
Miami Dade Product Control

ANTHONY LYNN MILLER
LICENSE
No. 58705
10/11/11
STATE OF FLORIDA
PROFESSIONAL ENGINEER
A. LYNN MILLER, P.E.
FL P.E.# 58705

Revsd By:	Date:	Revisions:	
F.K.	10/16/06	B	UPDATED BUILDING CODE AND DESIGN MANUAL YEARS. ADDED TEST REPORT.
J.R.	09/22/09	C	NO CHANGES THIS SHEET.
J.J.	10/10/11	D	FBC 2010 CODE CHANGE
Drawn By: F.K.	Date: 12/30/04	Checked By:	Date:

1070 TECHNOLOGY DRIVE
NOKOMIS, FL 34275

P.O. BOX 1529
NOKOMIS, FL 34274

Description: GENERAL NOTES, GLAZING DETAILS AND MAP

Title: ALUM. FRENCH DOOR & SIDE LITES, NON-IMPACT

Series/Model:	Scale:	Sheet:	Drawing No.	Rev:
FD650	FULL	1 of 11	8000-12	D

TABLE 1. COMPARATIVE ANALYSIS: OUTSWING DOORS

GLASS A. 3/16" TEMPERED GLASS

OPTIONS: B. 7/8" I.G. (3/16"T, AIR SPACE, 3/16"T)

CONFIG.	DOOR WIDTH	DOOR HEIGHT 6^8 - 79 3/4"	7^0 - 83 3/4"	87 3/4"	91 3/4"	8^0 - 95 3/4"
X	2^0 25"	+100.0 -145.0	+100.0 -145.0	+100.0 -145.0	+100.0 -145.0	+100.0 -139.5
X	27"	+100.0 -145.0	+100.0 -145.0	+100.0 -144.2	+100.0 -136.9	+100.0 -130.3
X	29"	+100.0 -145.0	+100.0 -143.4	+100.0 -135.7	+100.0 -128.7	+100.0 -122.4
X	2^6 31"	+100.0 -144.2	+100.0 -135.8	+100.0 -128.3	+100.0 -121.6	+100.0 -115.6
X	2^8 33"	+100.0 -126.7	+100.0 -126.7	+100.0 -122.0	+100.0 -115.5	+100.0 -109.7
X	35"	+100.0 -112.2	+100.0 -112.2	+100.0 -112.2	+100.0 -110.2	+100.0 -104.6
X	3^0 37"	+100.0 -100.0	+100.0 -100.0	+100.0 -100.0	+100.0 -100.0	+100.0 -100.0
XX	4^0 47 3/4"	+100.0 -145.0	+100.0 -145.0	+100.0 -145.0	+100.0 -145.0	+100.0 -139.5
XX	51 3/4"	+100.0 -145.0	+100.0 -145.0	+100.0 -144.2	+100.0 -136.9	+100.0 -130.3
XX	55 3/4"	+100.0 -145.0	+100.0 -143.4	+100.0 -135.7	+100.0 -128.7	+100.0 -122.4
XX	5^0 59 3/4"	+100.0 -144.2	+100.0 -135.8	+100.0 -128.3	+100.0 -121.6	+100.0 -115.6
XX	5^4 63 3/4"	+100.0 -126.7	+100.0 -126.7	+100.0 -122.0	+100.0 -115.5	+100.0 -109.7
XX	67 3/4"	+100.0 -112.2	+100.0 -112.2	+100.0 -112.2	+100.0 -110.2	+100.0 -104.6
XX	6^0 71 3/4"	+100.0 -100.0	+100.0 -100.0	+100.0 -100.0	+100.0 -100.0	+100.0 -100.0

TABLE 2. COMPARATIVE ANALYSIS: FULL JAMB SIDE LITE

GLASS A. 3/16" TEMPERED GLASS

OPTIONS: C. 7/8" I.G. (3/16"T, AIR SPACE, 3/16"T)

SIDE LITE WIDTH	SIDE LITE HEIGHT 6^8 - 79 3/4"	7^0 - 83 3/4"	87 3/4"	91 3/4"	8^0 - 95 3/4"
21 11/16"	+100.0 -145.0	+100.0 -145.0	+100.0 -145.0	+100.0 -145.0	+100.0 -145.0
24 11/16"	+100.0 -145.0	+100.0 -145.0	+100.0 -145.0	+100.0 -144.9	+100.0 -137.9
30 11/16"	+100.0 -142.9	+100.0 -135.3	+100.0 -127.8	+100.0 -121.1	+100.0 -115.1
33 11/16"	+100.0 -118.6	+100.0 -118.6	+100.0 -118.6	+100.0 -112.5	+100.0 -106.8
36 11/16"	+100.0 -100.0	+100.0 -100.0	+100.0 -100.0	+100.0 -100.0	+100.0 -100.0

NOTE: REFERENCE TEST REPORTS FTL4450, FTL-4451, FTL-4452, FTL-4921 AND FTL 5967. B

TABLE 3. COMPARATIVE ANALYSIS: NARROW JAMB SIDE LITE

GLASS A. TEMPERED GLASS

OPTIONS: B. 7/8" I.G. (3/16"T, AIR SPACE, 3/16"T)

SIDE LITE WIDTH	SIDE LITE HEIGHT 6^8 - 79 3/4"	7^0 - 83 3/4"	87 3/4"	91 3/4"	8^0 - 95 3/4"
10 11/16"	+100.0 -145.0	+100.0 -145.0	+100.0 -145.0	+100.0 -145.0	+100.0 -145.0
13 11/16"	+100.0 -145.0	+100.0 -145.0	+100.0 -145.0	+100.0 -145.0	+100.0 -145.0
16 11/16"	+100.0 -145.0	+100.0 -145.0	+100.0 -145.0	+100.0 -145.0	+100.0 -145.0
19 11/16"	+100.0 -145.0	+100.0 -145.0	+100.0 -145.0	+100.0 -145.0	+100.0 -145.0
21 11/16"	+100.0 -145.0	+100.0 -145.0	+100.0 -145.0	+100.0 -145.0	+100.0 -145.0
24 11/16"	+100.0 -145.0	+100.0 -145.0	+100.0 -145.0	+100.0 -144.9	+100.0 -137.9
30 11/16"	+100.0 -142.9	+100.0 -135.3	+100.0 -127.8	+100.0 -121.1	+100.0 -115.1
33 11/16"	+100.0 -118.6	+100.0 -118.6	+100.0 -118.6	+100.0 -112.5	+100.0 -106.8
36 11/16"	+100.0 -100.0	+100.0 -100.0	+100.0 -100.0	+100.0 -100.0	+100.0 -100.0

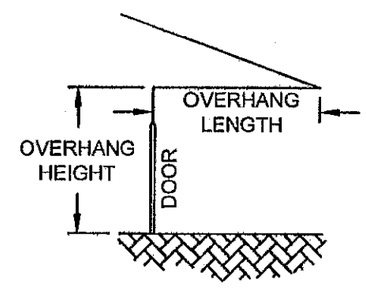

B

NOTES:

1. IF USING THE OPTIONAL LOW-RISE SILL (PART 10, SHEET 7 OF 11), THE OVERHANG HEIGHT MUST BE GREATER THAN THE OVERHANG LENGTH (SEE DIAGRAM). IF NOT, THE MAXIMUM POSITIVE (+) DESIGN PRESSURE IS LIMITED TO +50.0 PSF FOR ALL STYLES AND SIZES OF THE DOOR AND ANY ADJOINING SIDELITES.

PRODUCT REVISED
as complying with the Florida Building Code
Acceptance No 11-1013.23
Expiration Date March 24, 2015
By Maurel Diaz
Miami Dade Product Control

PRODUCT RENEWED
as complying with the Florida Building Code
Acceptance No 14-1117.04
Expiration Date 03/24/2020
By
Miami Dade Product Control

ANTHONY LYNN MILLER
LICENSE
No. 58705
STATE OF FLORIDA
PROFESSIONAL ENGINEER
A. LYNN MILLER, P.E.
FL P.E.# 58705

Revsd By:	Date:	Revisions:	
J.R.	09/22/09	B	ADDED NOTE/DIAGRAM FOR LOW SILL OPTION. ADDED TEST REPORT #.
J.R.	01/25/10	C	NO CHANGES THIS SHEET.
J.J.	10/10/11	D	NO CHANGES THIS SHEET.
Drawn By: F.K.	Date: 12/30/04	Checked By:	Date:

1070 TECHNOLOGY DRIVE
NOKOMIS, FL 34275

P.O. BOX 1529
NOKOMIS, FL 34274

PGT®

Description: DESIGN PRESSURES

Title: ALUM. FRENCH DOOR & SIDE LITES, NON-IMPACT

Series/Model:	Scale:	Sheet:	Drawing No.	Rev:
FD650	NA	2 of 11	8000-12	D

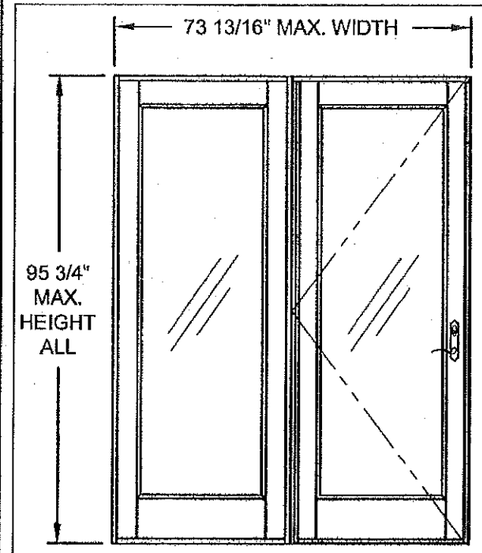

OX OR XO

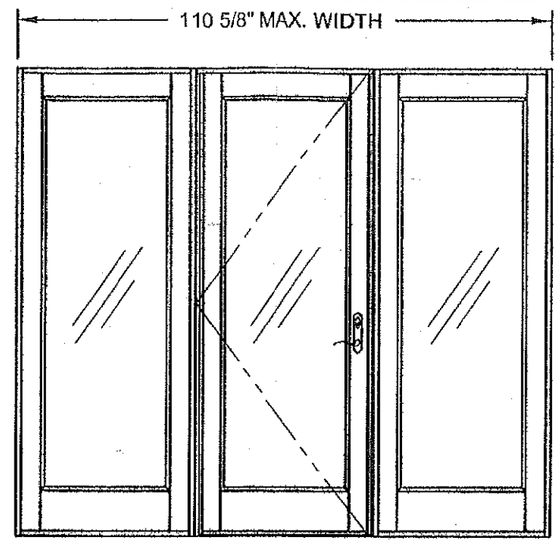

OXO

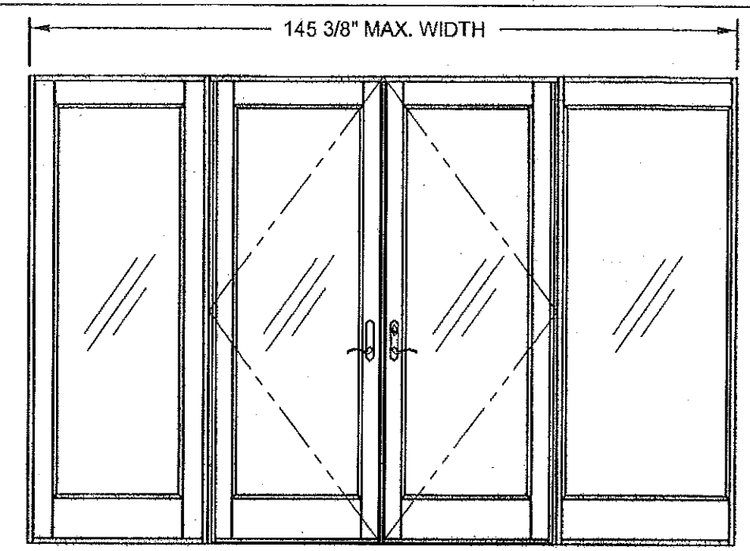

OXXO (SHOWING EACH VERSION SIDELITE)

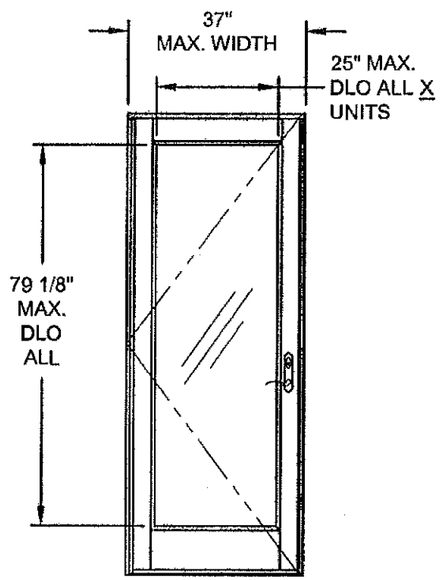

X

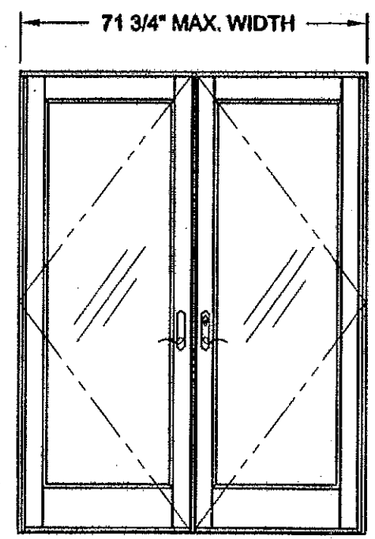

XX

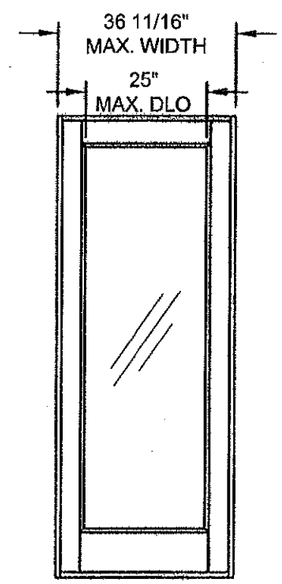

O (FULL JAMB)

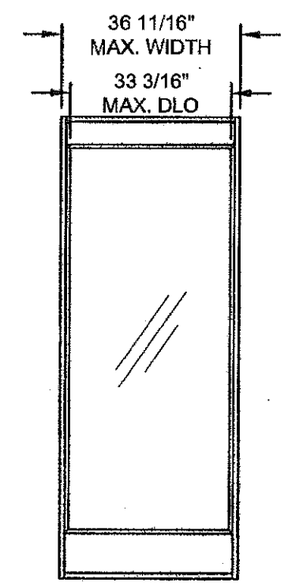

O (NARROW JAMB)

NOTES:
1. CONFIGURATIONS WITH SIDE LITES CAN BE EITHER NARROW JAMB OR FULL JAMB VERSIONS.
2. FOR ANCHOR SPACING AND DETAILS, SEE SHEETS 8 THROUGH 10.
3. FOR VERTICAL SECTIONS SEE SHEET 4 AND FOR HORIZONTAL SECTIONS SEE SHEET 5.

Revised By:	Date:	Revisions:	
J.R.	09/22/09	B	NO CHANGE THIS SHEET
J.R.	01/25/10	C	NO CHANGES THIS SHEET.
J.J.	10/10/11	D	NO CHANGES THIS SHEET.
Drawn By: F.K.	Date: 12/30/04	Checked By:	Date:

1070 TECHNOLOGY DRIVE
NOKOMIS, FL 34275

P.O. BOX 1529
NOKOMIS, FL 34274

PGT®

Description: EXAMPLE ELEVATIONS

Title: ALUM. FRENCH DOOR & SIDE LITES, NON-IMPACT

Series/Model:	Scale:	Sheet:	Drawing No.	Rev:
FD650	NTS	3 of 11	8000-12	D

PRODUCT REVISED
as complying with the Florida
Building Code
Acceptance No 11-1013.23
Expiration Date March 24, 2015
By
Miami Dade Product Control

PRODUCT RENEWED
as complying with the Florida
Building Code
Acceptance No 14-1117.04
Expiration Date 03/24/2020
By
Miami Dade Product Control

ANTHONY LYNN MILLER
LICENSE
No. 58705
10/11/11
STATE OF FLORIDA
PROFESSIONAL ENGINEER

A. LYNN MILLER, P.E.
FL P.E.# 58705

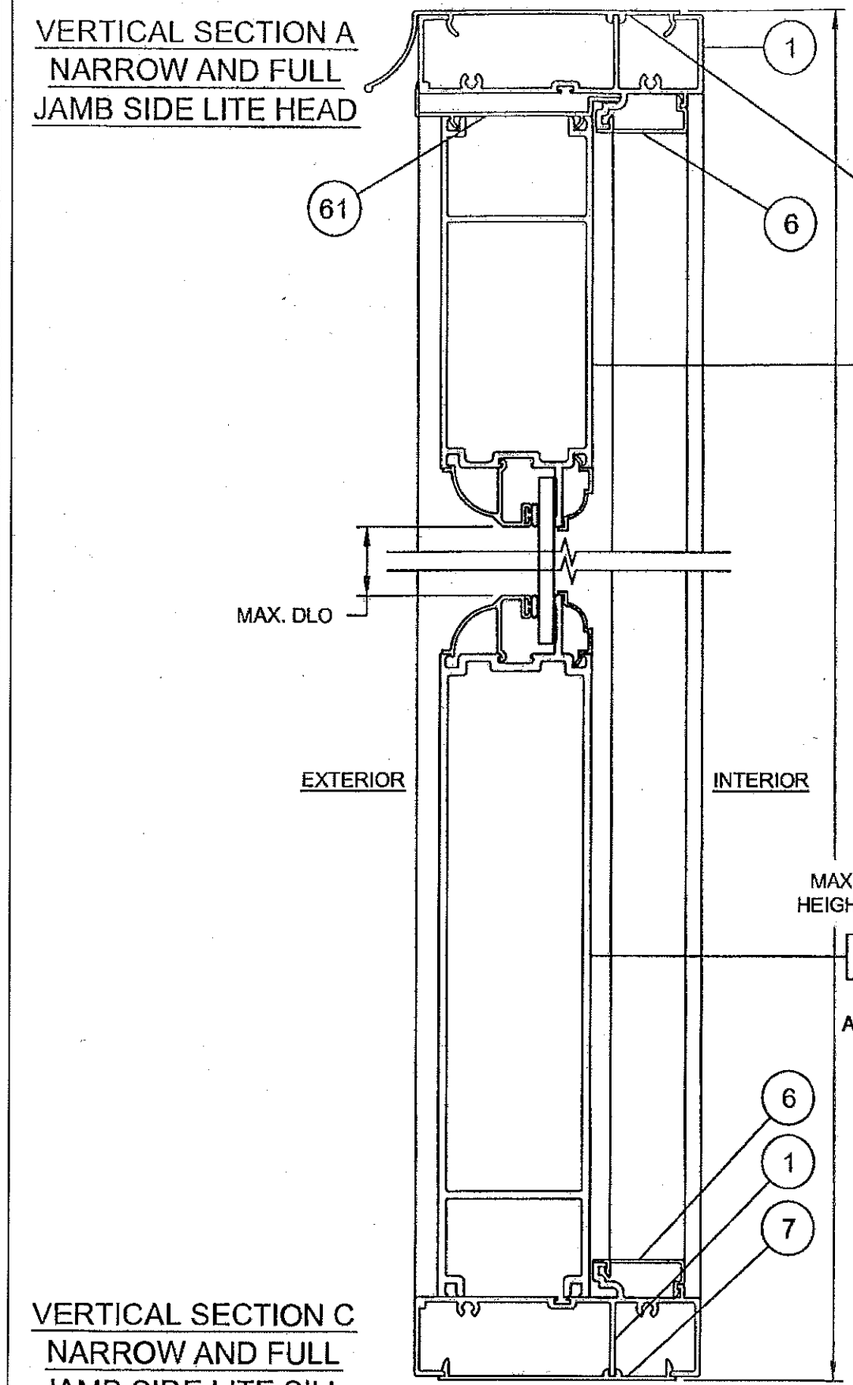

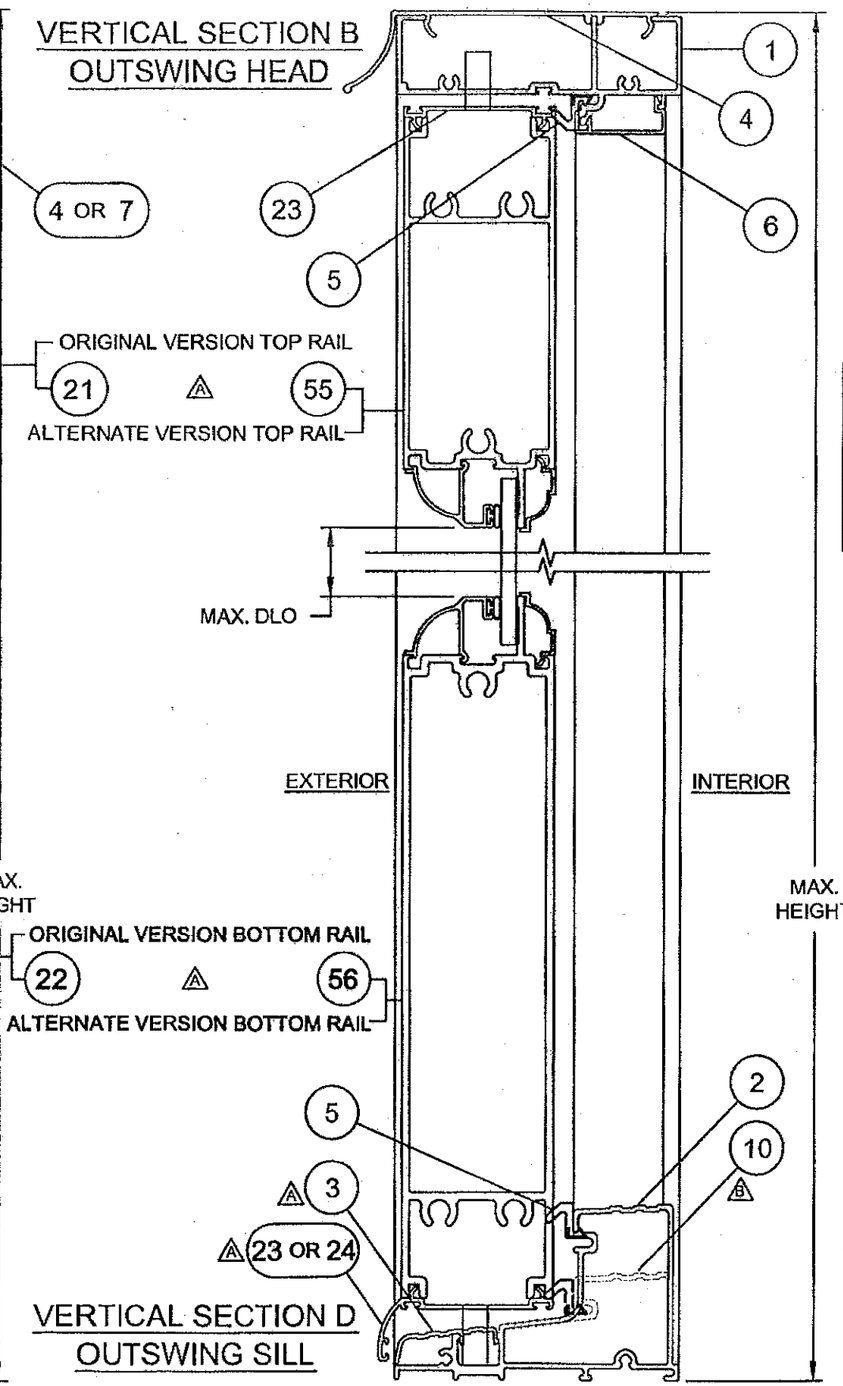

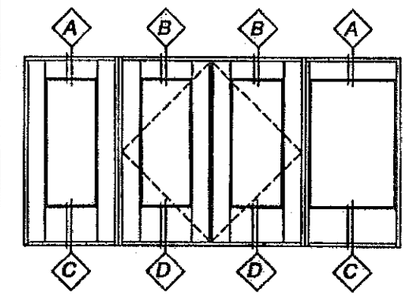

VERTICAL SECTION C
NARROW AND FULL
JAMB SIDE LITE SILL

VERTICAL SECTION D
OUTSWING SILL

PRODUCT REVISED
as complying with the Florida
Building Code
Acceptance No 11-1013.23
Expiration Date March 24, 2015
By Manuel Perez
Miami Dade Product Control

PRODUCT RENEWED
as complying with the Florida
Building Code
Acceptance No 14-1117.04
Expiration Date 03/24/2020
By
Miami Dade Product Control

ANTHONY LYNN MILLER
LICENSE
No. 58705
10/11/11
STATE OF
FLORIDA
PROFESSIONAL ENGINEER

A. LYNN MILLER, P.E.
FL P.E.# 58705

Revsd By:	Date:	Revisions:	
J.R.	09/22/09	B	ADDED LOW RISE SILL
J.R.	01/26/10	C	NO CHANGES THIS SHEET.
J.J.	10/10/11	D	NO CHANGES THIS SHEET.
Drawn By: F.K.	Date: 12/30/04	Checked By:	Date:

1070 TECHNOLOGY DRIVE
NOKOMIS, FL 34275

P.O. BOX 1529
NOKOMIS, FL 34274

PGT®

Description: VERTICAL SECTIONS

Title: ALUM. FRENCH DOOR & SIDE LITES, NON-IMPACT

Series/Model:	Scale:	Sheet:	Drawing No.	Rev:
FD650	1/2	4 of 11	8000-12	D

OXXO HORIZONTAL SECTION SHOWING (1) OF EACH SIDE LITE TYPE

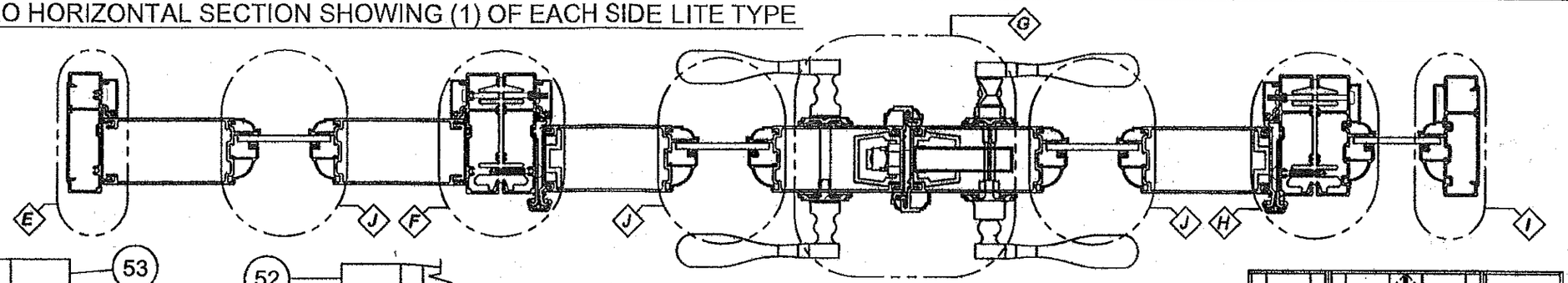

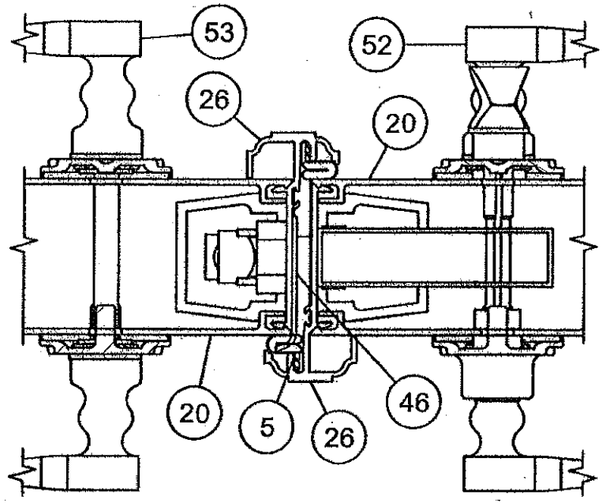

DETAIL G STILES AT ASTRAGAL

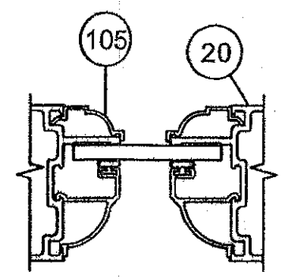

DETAIL J
SLAB AT
GLASS BED

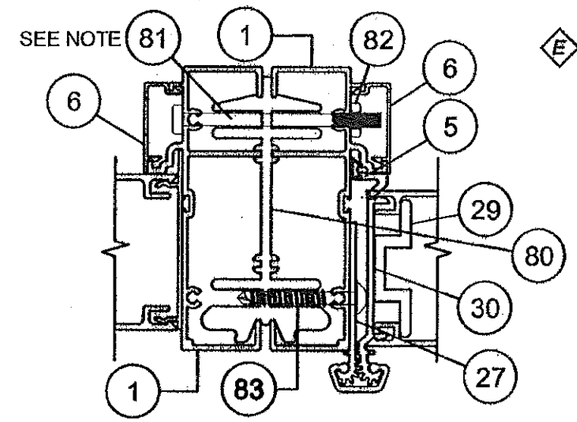

DETAIL F
FULL JAMB SIDE LITE
(AT HINGE JAMB)

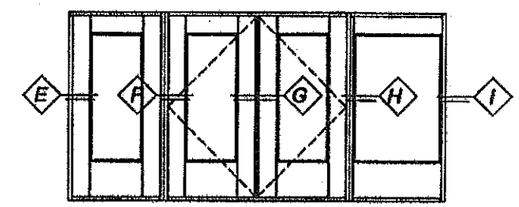

NOTE: ASSEMBLY HARDWARE QTY (3), 11" FROM TOP & BOTTOM AND ONE AT MIDSPAN

INTERIOR

EXTERIOR

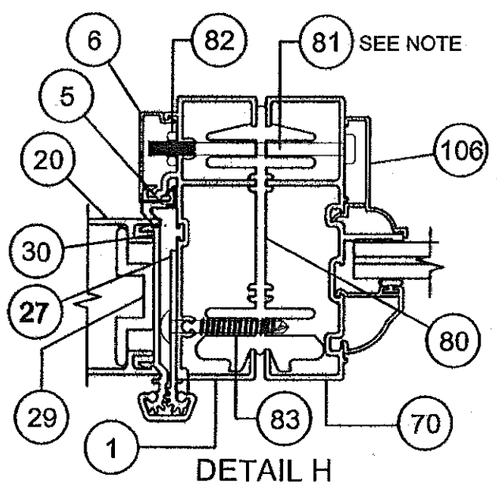

DETAIL H
NARROW JAMB SIDE LITE
(AT HINGE JAMB)

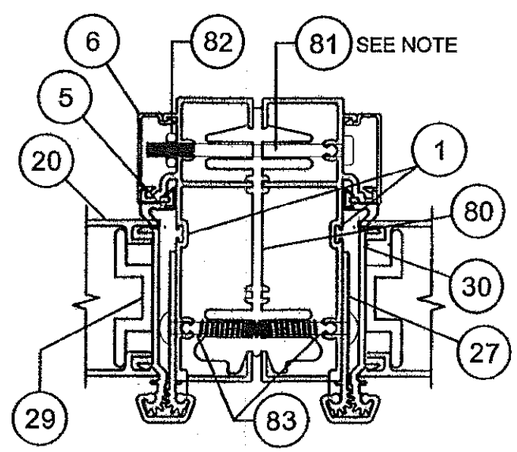

DETAIL K
HINGE JAMB TO HINGE JAMB
(NOT SHOWN ABOVE)

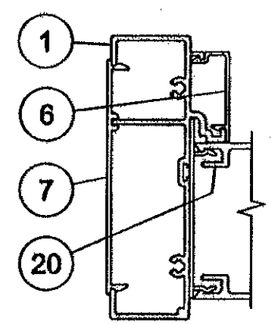

DETAIL E
JAMB, FULL JAMB
SIDE LITE

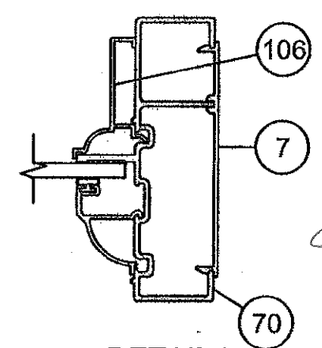

DETAIL I
JAMB, NARROW
JAMB SIDE LITE

PRODUCT REVIEWED
as complying with the Florida
Building Code
Acceptance No 11-1013.23
Expiration Date March 24, 2015
By Manuel Sua
Miami Dade Product Control

PRODUCT RENEWED
as complying with the Florida
Building Code
Acceptance No 14-1117.04
Expiration Date 03/24/2020
By
Miami Dade Product Control

ANTHONY LYNN MILLER
LICENSE
No. 58705
STATE OF FLORIDA
PROFESSIONAL ENGINEER
A. LYNN MILLER, P.E.
FL P.E.# 58705

Revised By:	Date:	Revisions:	
J.R.	09/22/09	B	NO CHANGE THIS SHEET
J.R.	01/25/10	C	NO CHANGES THIS SHEET.
J.J.	10/10/11	D	NO CHANGES THIS SHEET.
Drawn By: F.K.	Date: 12/30/04	Checked By:	Date:

1070 TECHNOLOGY DRIVE
NOKOMIS, FL 34275

P.O. BOX 1529
NOKOMIS, FL 34274

PGT®

Description: HORIZONTAL SECTION DETAILS

Title: ALUM. FRENCH DOOR & SIDE LITES, NON-IMPACT

Series/Model:	Scale:	Sheet:	Drawing No.	Rev:
FD650	1/2	5 of 11	8000-12	D

FD650 DOOR(S)

ITEM	DWG#	DESCRIPTION	PGT#
		FRAME KIT PARTS	
1	8006	FRAME - HEAD & HINGE JAMB	68006
2	8003A	OUT-SWING SILL	68003A
3	8004C	OUT-SWING SILL COVER	68004C ⚠
4	8008	DRIP CAP	68008
5	----------	HEAD, SILL & JAMB WEATHERSTRIP (SCHLEGAL)	U83337T8500
6	8007	SCREW COVER	68007
7	8009	INSTALL PLATE	68009
8	----------	FRAME ASSEMBLY SCREW #8 X 1" PH QUAD	781PQA
9	8032	ASTRAGAL END SEAL	48032
10	8058	OUT-SWING SILL (LOW RISE)	48058 ⚠B
		DOOR PANEL	
5	----------	HEAD, SILL & JAMB WEATHERSTRIP (SCHLEGAL)	U83337T8500
20	8012	STILE	68012
21	8014	TOP RAIL, (THREADED ROD DESIGN)	68014
22	8013	BOTTOM RAIL, (THREADED ROD DESIGN)	68013
23	8017	TOP SWEEP	68017
24	8016	BOTTOM SWEEP	68016
25	----------	SWEEP SCREWS, #4 X 1/2" PHIL PH	
26	8015	ASTRAGAL, ACTIVE & INACTIVE	68015
27	8021B	GEAR HINGE, JAMB SIDE	68021B
28	8020A	GEAR HINGE, COVER	68020A
29	8018	GEAR HINGE, BACK-UP PLATE	68018
30	8019A	GEAR HINGE, DOOR SIDE	68019A
31	8035	GEAR HINGE, BEARING	68035
32	----------	GEAR HINGE, SET-SCREW #6-32 x 1/4"	
33	----------	GEAR HINGE, MTG. SCREW #12 x 3/4" TRUSS HD.	
34	----------	GEAR HINGE, MTG. SCREW #12 x 1 1/2" TRUSS HD.	
35	----------	THREADED ROD 5/16-18 X 36"	6TRODA
36	----------	FLANGED HEX NUT 5/16-18	7990NUTA
37	8039	TRUSS CLAMP	60378M
38	8043	S/S GEAR LATCH MECHANISM (ASHLAND)	
39	8030	LOCK BLOCK	48030
40	----------	LATCH ASS'Y SCREWS #8 X 2" SS PHILL TR HD	78X2TPAX
41	8037	S/S SHOOT BOLT ROD (SULLIVAN)	
42	8045	STANDARD FLUSH BOLTS W/ SS ROD (SULLIVAN)	
43	8031	SHOOT BOLT GUIDE	48031
44	----------	SHOOT BOLT GUIDE & STRIKE SCREW 8-32 X 3/8" SS PHILL TR HD	78X38PFTX
45	8038R	RIGHT - STRIKE PLATE AT ASTRAGAL (ACTIVE HINGED LEFT)	W5110-43S1
46	8038L	LEFT - STRIKE PLATE AT ASTRAGAL (ACTIVE HINGED RIGHT)	W5110-44S1
47	----------	STRIKE PLATE SCREWS 8-32 X 3/8" SS PHILL TR HD	78X38PFTX
48	----------	STRIKE PLATE MIDDLE SCREW 6-24 X 1/2" FH	7612FPTX
49	8036	STRIKE PLATE AT HEAD & SILL	
50	----------	HEAD STRIKE SCREWS SS 8 X 1/2 PHILL FH	7858ZAX
51	----------	STRIKE PLATE SCREWS @SILL SS 8 X 1/2 PHILL UNDERCUT FH	78X12PFHUX
52	8041	ACTIVE TRIM SET (ASHLAND)	
53	8042	PASSIVE TRIM SET (ASHLAND)	
54	8044	STAINLESS STEEL PASSIVE LOCK GEAR (ASHLAND)	
55	8014A	TOP RAIL (LAG BOLT DESIGN)	68014A ⚠
56	8013A	BOTTOM RAIL (LAG BOLT DESIGN)	68013A ⚠

FD650 FULL JAMB SIDE LITE

ITEM	DWG #	DESCRIPTION	PGT#
1	8006	FRAME - HEAD, SILL & JAMB	68006
4	8008	DRIP CAP	68008
6	8007	SCREW COVER	68007
7	8009	INSTALL PLATE	68009
8	----------	FRAME ASSEMBLY SCREW #8 X 1" PH QUAD	781PQA
20	8012	STILE	68012
21	8014	TOP RAIL	68014
22	8013	BOTTOM RAIL	68013
35	----------	THREADED ROD 5/16-18 X 36"	6TRODA
36	----------	FLANGED HEX NUT 5/16-18	7990NUTA
37	8039	TRUSS CLAMP	60378M
60	----------	#8 X 3/4" PH SQ DRIVE TEK SCREW	78X34PSTW
61	8028	SIDE LITE HEAD TRIM	68028
62	8029	SIDE LITE JAMB TRIM	68029

FD650 NARROW JAMB SIDE LITE

1	8006	FRAME - HEAD & SILL	68006
4	8008	DRIP CAP	68008
6	8007	SCREW COVER	68007
7	8009	INSTALL PLATE	68009
8	----------	FRAME ASSEMBLY SCREW #8 X 1" PH QUAD	781PQA
21	8014	TOP RAIL	68014
22	8013	BOTTOM RAIL	68013
35	----------	THREADED ROD 5/16-18 X 36"	6TRODA
36	----------	FLANGED HEX NUT 5/16-18	7990NUTA
37	8039	TRUSS CLAMP	60378M
60	----------	#8 X 3/4" PH SQ DRIVE TEK SCREW	78X34PSTW
61	8028	SIDE LITE HEAD TRIM	68028
70	8010	FRAME, JAMB	68010

ASSEMBLY KIT

80	8033B	FRENCH DOOR ASSEMBLY BEAM	68033B
81	----------	#10-24 X 2 1/2" PH SCREW	
82	----------	#10-24 HEX NUT	
83	----------	#12 X 1 1/2" TR HD TEK SCREW	
84	8056	SUBSILL (OPTIONAL)	68056 ⚠

GLASS, BEADS & SILICONE

90	----------	GLAZING SEALANT, DOW CORNING 899, 983, 995 OR EQUIVALENT	
100	----------	3/16" TEMPERED GLASS	
101	----------	7/8" I.G. GLASS (3/16"T, 1/2" AIR SPACE, 3/16"T)	
102	8025	3/16" BEAD	68025
105	8022	BACK BEAD	68022
106	8026A	SL BACKBEAD	68026A
108	8024A	7/8" IG BEAD	68024A
109	1224	VINYL BULB W STP (THICK)	6TP247

PRODUCT REVISED
as complying with the Florida
Building Code
Acceptance No 11-1013.23
Expiration Date March 24, 2015
By Manuel Cruz
Miami Dade Product Control

PRODUCT RENEWED
as complying with the Florida
Building Code
Acceptance No 14-1117.04
Expiration Date 03/24/2020
By
Miami Dade Product Control

ANTHONY LYNN MILLER
LICENSE
No. 58705
STATE OF FLORIDA
PROFESSIONAL ENGINEER
10/11/11

A. LYNN MILLER, P.E.
FL P.E.# 58705

Revsd By:	Date:	Revisions:	
F.K.	10/16/08	B	ADDED LOW RISE SILL
J.R.	09/22/09	C	NO CHANGES THIS SHEET.
J.J.	10/10/11	D	NO CHANGES THIS SHEET.
Drawn By: F.K.	Date: 12/30/04	Checked By:	Date:

1070 TECHNOLOGY DRIVE
NOKOMIS, FL 34275

P.O. BOX 1529
NOKOMIS, FL 34274

PGT®

Description: PARTS LIST

Title: ALUM. FRENCH DOOR & SIDE LITES, NON-IMPACT

Series/Model:	Scale:	Sheet:	Drawing No.	Rev:
FD650	NA	6 of 11	8000-12	D

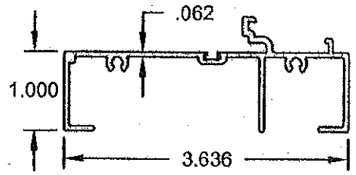

1 #8006 6063-T6
FRAME, HEAD, JAMB AND SIDELITE SILL

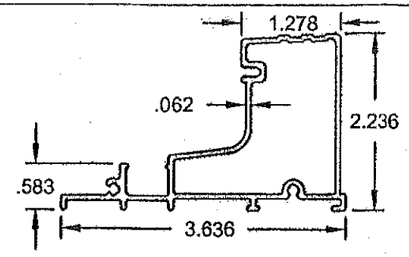

2 #8003A 6063-T6
OUT-SWING SILL

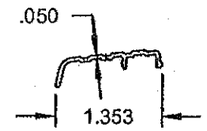

3 #8004C 6063-T5 ⚠
OS SILL COVER

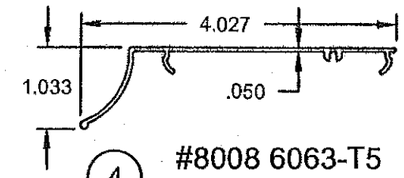

4 #8008 6063-T5
DRIP CAP

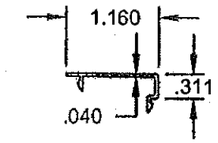

6 #8007 6063-T6
SCREW COVER

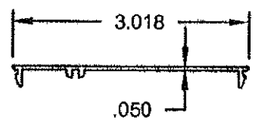

7 #8009 6063-T5
INSTALL PLATE

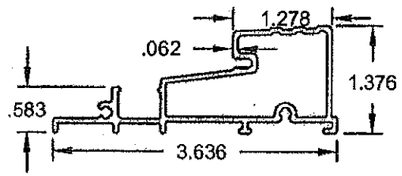

⚠ 10 #8056 6063-T6
OUT-SWING LOW SILL

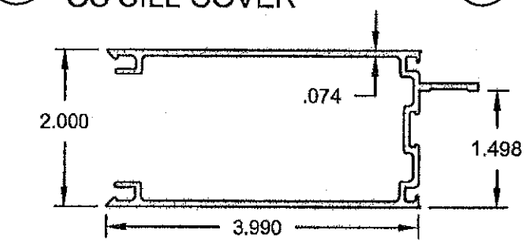

20 #8012 6063-T6
STILE

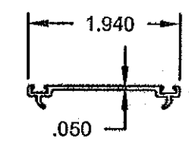

23 #8017 6063-T5
TOP SWEEP

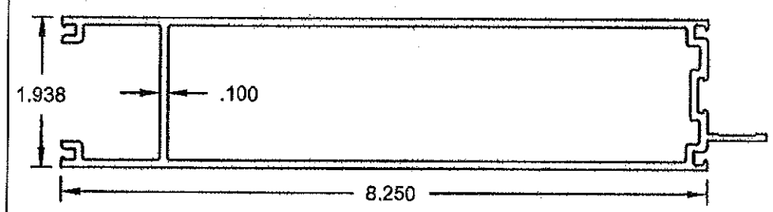

22 #8013 6063-T6
BOTTOM RAIL

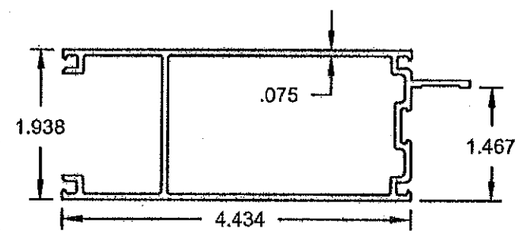

21 #8014 6063-T5
TOP RAIL

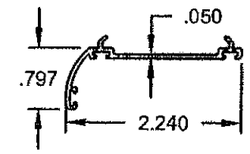

24 #8016 6063-T5
BOTTOM SWEEP

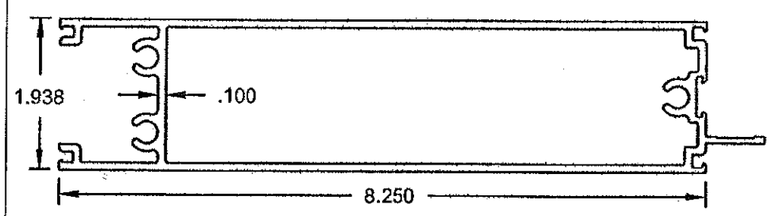

56 #8013A 6063-T6
BOTTOM RAIL, LAG BOLT DESIGN

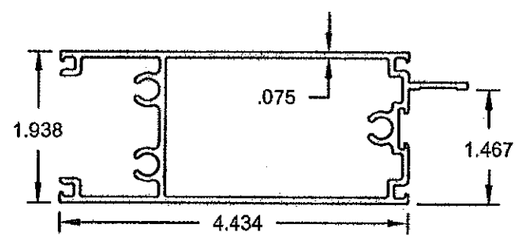

55 #8014A 6063-T5
TOP RAIL, LAG BOLT DESIGN

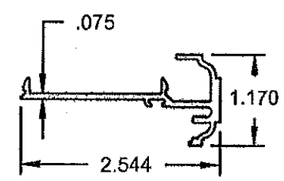

26 #8015 6063-T6
ASTRAGAL

PRODUCT REVISED
as complying with the Florida
Building Code
Acceptance No 11-1013.23
Expiration Date March 24, 2015
By
Miami Dade Product Control

PRODUCT RENEWED
as complying with the Florida
Building Code
Acceptance No 14-1117.04
Expiration Date 03/24/2020
By
Miami Dade Product Control

ANTHONY LYNN MILLER
LICENSE
No. 58705
STATE OF FLORIDA
PROFESSIONAL ENGINEER
A. LYNN MILLER, P.E.
FL P.E.# 58705

Revsd By:	Date:	Revisions:	
J.R.	09/22/09	B	ADDED LOW RISE SILL AND SECOND EXTRUSION SHEET.
J.R.	01/25/10	C	NO CHANGES THIS SHEET.
J.J.	10/10/11	D	NO CHANGES THIS SHEET.
Drawn By: F.K.	Date: 12/30/04	Checked By:	Date:

1070 TECHNOLOGY DRIVE
NOKOMIS, FL 34275

P.O. BOX 1529
NOKOMIS, FL 34274

PGT®

Description: EXTRUSION PROFILES

Title: ALUM. FRENCH DOOR & SIDE LITES, NON-IMPACT

Series/Model:	Scale:	Sheet:	Drawing No.	Rev:
FD650	1/2	7 of 11	8000-12	D

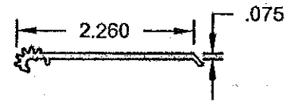

(27) #8021B 6063-T6
GEAR HINGE, JAMB

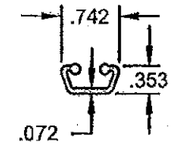

(28) #8020A 6063-T6
GEAR HINGE, COVER

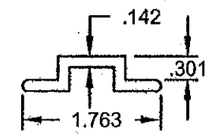

(29) #8018 6063-T5
HINGE, BACK-UP

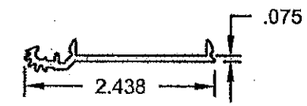

(30) #8019A 6063-T6
GEAR HINGE, DOOR

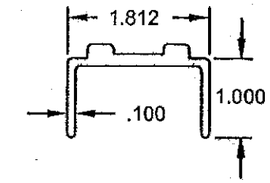

(37) #8039 6063-T6
TRUSS CLAMP

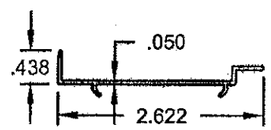

(61) #8028 6063-T5
SL HEAD TRIM

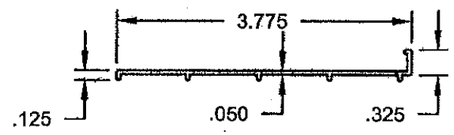

(84) #8056 6063-T4
SUBSILL, OPTIONAL

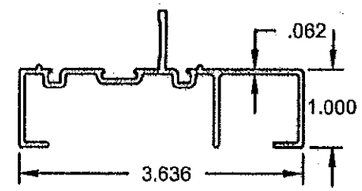

(70) #8010 6063-T6
NARROW SL JAMB

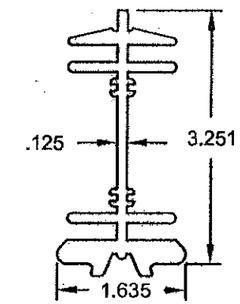

(80) #8033B 6105-T5
FD ASS'Y BEAM

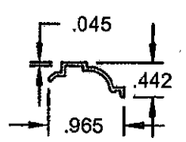

(105) #8022 6063-T5
BACKBEAD

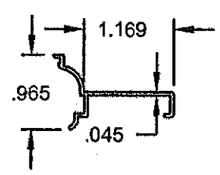

(106) #8026A 6063-T5
SL BACKBEAD

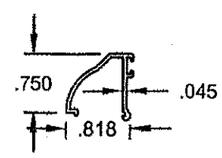

(107) #8023A 6063-T5
7/16" BEAD

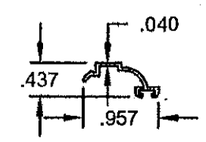

(108) #8024A 6063-T5
I.G. BEAD

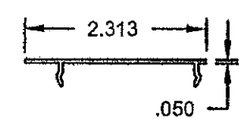

(62) #8029 6063-T5
SL JAMB TRIM

PRODUCT REVISED
as complying with the Florida
Building Code
Acceptance No 11-1013.23
Expiration Date March 24, 2015
By Manuel Perez
Miami Dade Product Control

PRODUCT RENEWED
as complying with the Florida
Building Code
Acceptance No 14-1117.04
Expiration Date 03/27/2020
By
Miami Dade Product Control

ANTHONY LYNN MILLER
LICENSE
No. 58705
10/11/11
STATE OF
FLORIDA
PROFESSIONAL ENGINEER
A. LYNN MILLER, P.E.
FL P.E.# 58705

Revsd By:	Date:	Revisions:	
J.R.	09/22/09	B	NEW PAGE
J.R.	01/26/10	C	NO CHANGES THIS SHEET.
J.J.	10/10/11	D	NO CHANGES THIS SHEET.
Drawn By: F.K.	Date: 12/30/04	Checked By:	Date:

1070 TECHNOLOGY DRIVE
NOKOMIS, FL 34275

P.O. BOX 1529
NOKOMIS, FL 34274

Description: EXTRUSION PROFILES (CONT.)

Title: ALUM. FRENCH DOOR & SIDE LITES, NON-IMPACT

Series/Model:	Scale:	Sheet:	Drawing No.	Rev:
FD650	1/2	8 of 11	8000-12	D

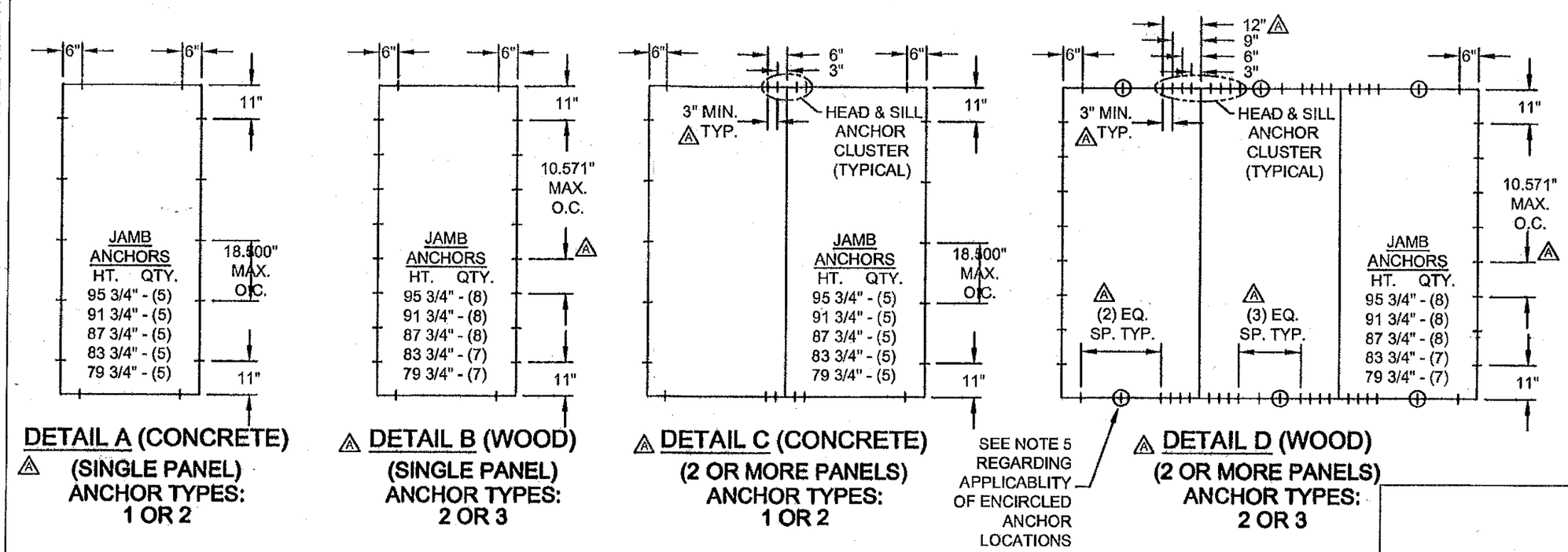

ANCHORAGE SPACING REQUIREMENTS:

1. DETAILS A AND B ABOVE REPRESENT ANCHORING OF SINGLE X DOORS, OR INDIVIDUAL SIDE LITE O PANELS WITH FULL OR NARROW WIDTH JAMBS. DETAILS C AND D ABOVE REPRESENT ANCHORING OF ANY MIXTURE OF DOUBLE XX DOORS, SINGLE X DOORS, NARROW JAMB OR FULL JAMB SIDE LITE PANELS, FOR MULTIPLE-PANEL INSTALLATIONS OF TWO OR MORE PANELS. UNLESS OTHERWISE STATED, DIMENSIONS OF DETAILS A THROUGH D ARE MAXIMUMS.

2. ANCHOR TYPES: 1 - 1/4" ELCO ULTRACON 2 -1/4" ELCO SS4 CRETE-FLEX 3 - #12 STEEL SCREW (G5)

CONCRETE SUBSTRATE USE TYPE 1 AT 1 3/8" MIN. EMBEDMENT OR TYPE 2 AT 1 3/4" EMBEDMENT. 1 3/4" MIN. EDGE DISTANCE FOR BOTH.
WOOD SUSTRATE - USE TYPE 2 OR TYPE 3 AT 1 3/8" MIN. EMBEDMENT.

3. SINGLE PANEL CONFIGURATIONS: (DETAIL A, CONCRETE SUBSTRATE. DETAIL B, WOOD SUBSTRATE)

HEAD AND SILL.....6" MAX. FROM FRAME CORNERS.
JAMBS.....11" MAX. FROM FRAME CORNERS, 18.500" MAX. O.C. CONCRETE SUBSTRATE (DETAIL A) AND 10.571" MAX. O.C. WOOD SUBSTRATE (DETAIL B).

4. TWO OR MORE PANEL CONFIGURATIONS: (DETAIL C, CONCRETE SUBSTRATE)

HEAD AND SILL.....6" MAX. FROM FRAME CORNERS, AND AT 3" AND 6" MAX. ON EACH SIDE OF ASSEMBLY BEAM AND/OR ASTRAGAL LOCATIONS (CLUSTER OF 4).
JAMBS....11" MAX. FROM FRAME CORNERS AND 18.500" MAX. O.C.

5. TWO OR MORE PANEL CONFIGURATIONS: (DETAIL D, WOOD SUBSTRATE)

HEAD AND SILL.....6" MAX. FROM FRAME CORNERS, AND AT 3", 6", 9" AND 12" MAX. ON EACH SIDE OF ASSEMBLY BEAM AND/OR ASTRAGAL LOCATIONS (CLUSTER OF 8). PLUS ENCIRCLED ANCHORS OUTSIDE CLUSTERS, REQUIRED ONLY ON PANEL WIDTHS OVER 27 3/4".
JAMBS.....11" MAX. FROM FRAME CORNERS AND 10.571" MAX. O.C.

Revsd By:	Date:	Revisions:	
J.R.	08/22/09	B	NO CHANGES THIS SHEET.
J.R.	01/26/10	C	CHANGED "TAPCON" TO "ULTRACON".
J.J.	10/10/11	D	NO CHANGES THIS SHEET.
Drawn By: F.K.	Date: 12/30/04	Checked By:	Date:

1070 TECHNOLOGY DRIVE
NOKOMIS, FL 34275
P.O. BOX 1529
NOKOMIS, FL 34274

Description: ANCHORAGE SPACING
Title: ALUM. FRENCH DOOR & SIDE LITES, NON-IMPACT

Series/Model:	Scale:	Sheet:	Drawing No.	Rev:
FD650	NTS	9 of 11	8000-12	D

PRODUCT REVISED
in complying with the Florida Building Code
Acceptance No 11-1013.23
Expiration Date March 24, 2015
By Manuel Cruz
Miami Dade Product Control

PRODUCT RENEWED
as complying with the Florida Building Code
Acceptance No 14-1117.04
Expiration Date 03/24/2020
By
Miami Dade Product Control

ANTHONY LYNN MILLER
LICENSE
No. 58705
10/11/11
STATE OF FLORIDA
PROFESSIONAL ENGINEER

A. LYNN MILLER, P.E.
FL P.E.# 58705

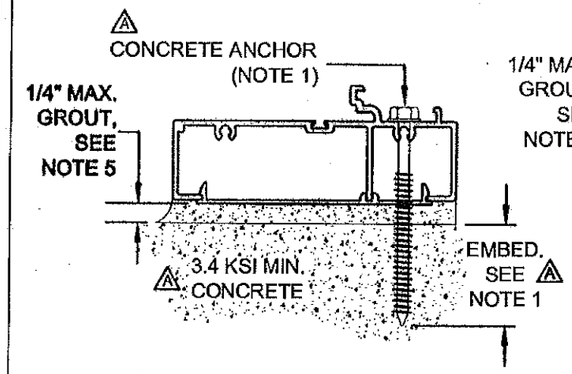

TYPICAL SIDE LITE SILL
(DIRECT TO CONCRETE)

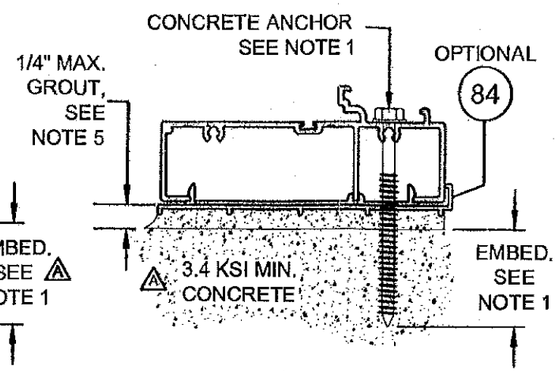

OPTIONAL SIDE LITE SILL
(SUBSILL TO CONCRETE)

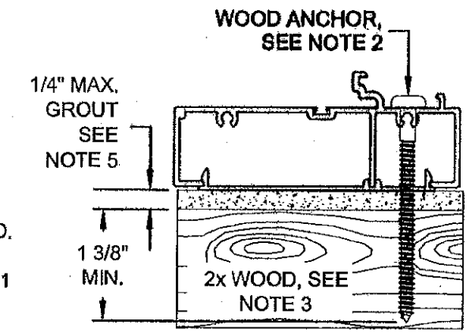

B TYPICAL SIDE LITE SILL
(DIRECT TO WOOD)

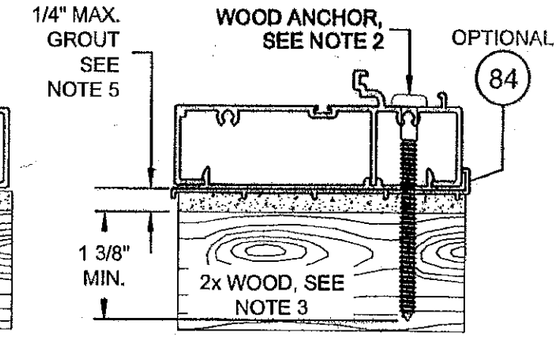

OPTIONAL SIDE LITE SILL
(SUBSILL TO WOOD)

EXTERIOR INTERIOR
(ALL HEAD & SILL SECTIONS)

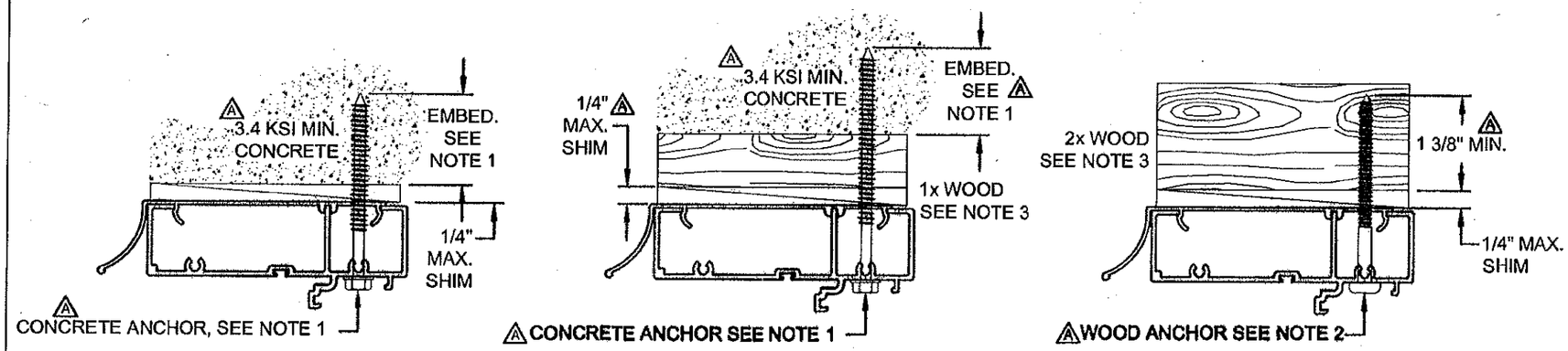

TYPICAL DOOR & SIDE LITE HEAD

A

NOTES:

1. FOR CONCRETE APPLICATIONS IN MIAMI-DADE COUNTY, USE ONLY MIAMI-DADE COUNTY APPROVED ELCO 1/4" ULTRACONS OR 1/4" SS4 CRETE-FLEX. MIN. DISTANCE FROM ANCHOR TO CONCRETE EDGE IS 1 3/4". MIN. EMBEDMENT: 1/4" ULTRACON - 1 3/8", 1/4" SS4 CRETE-FLEX - 1 3/4".
2. FOR WOOD APPLICATIONS USE #12 STEEL SCREWS (G5) OR ELCO 1/4" SS4 CRETE-FLEX - 1 3/8" MIN. EMBEDMENT FOR EITHER.
3. WOOD BUCKS DEPICTED AS 1x ARE LESS THAN 1 1/2" THICK. 1x WOOD BUCKS ARE OPTIONAL IF UNIT IS INSTALLED DIRECTLY TO SOLID CONCRETE. WOOD BUCKS DEPICTED AS 2x ARE 1 1/2" THICK OR GREATER. INSTALLATION TO THE SUBSTRATE OF WOOD BUCKS TO BE ENGINEERED BY OTHERS OR AS APPROVED BY THE AUTHORITY HAVING JURISDICTION (AHJ).
4. FOR ATTACHMENT TO ALUM: THE MAT'L SHALL BE A MIN. STRENGTH OF 6063-T5 AND A MIN. OF 1/8" THICK. THE ALUM. STRUCTURAL MEMBER SHALL BE OF A SIZE TO PROVIDE FULL SUPPORT TO THE DOOR FRAME SIMILAR TO THAT SHOWN IN THE DETAILS ON THIS SHEET FOR 2x WOOD BUCKS. THE ANCHOR SHALL BE A #12 SMS WITH FULL ENGAGEMENT INTO THE ALUM. IF THESE CRITERIA ARE MET, THE PRESSURES SHOWN ON SHEET 3 AND ANCHORAGE SPACING FOR WOOD SHOWN ON SHEET 9 MAY BE USED.
5. IF SILL IS TIGHT TO SUBSTRATE, GROUT OR OTHER MATERIAL IS NOT REQUIRED. IF USED, NON-SHRINK, NON-METALLIC GROUT, 3400 PSI MIN., (DONE BY OTHERS) MUST FULLY SUPPORT THE ENTIRE LENGTH OF THE SILL THAT IS NOT TIGHT TO THE SUBSTRATE, AND TRANSFER SHEAR LOAD TO SUBSTRATE.

Revsd By:	Date:	Revisions:	
J.R.	09/22/09	B	ADDED SIDELITE SILL DETAIL. REORGANIZED DETAILS.
Revsd By: J.R.	Date: 01/25/10	Revisions: C	CHANGED "TAPCON" TO "ULTRACON".
Revsd By: J.J.	Date: 10/10/11	Revisions: D	NO CHANGES THIS SHEET.
Drawn By: F.K.	Date: 12/30/04	Checked By:	Date:

1070 TECHNOLOGY DRIVE
NOKOMIS, FL 34275

P.O. BOX 1529
NOKOMIS, FL 34274

PGT®

Description: ANCHORAGE DETAILS

Title: ALUM. FRENCH DOOR & SIDE LITES, NON-IMPACT

Series/Model:	Scale:	Sheet:	Drawing No.	Rev:
FD650	1/2	10 of 11	8000-12	D

PRODUCT REVISED
as complying with the Florida
Building Code
Acceptance No 11-1013.23
Expiration Date March 24, 2015
By Manuel Perez
Miami Dade Product Control

PRODUCT RENEWED
as complying with the Florida
Building Code
Acceptance No 14-1114.04
Expiration Date 03/24/2020
By
Miami Dade Product Control

ANTHONY LYNN MILLER
LICENSE
No. 58705
10/11/11
STATE OF
FLORIDA
PROFESSIONAL ENGINEER

A. LYNN MILLER, P.E.
FL P.E.# 58705

EXTERIOR INTERIOR

(ALL SILL SECTIONS)

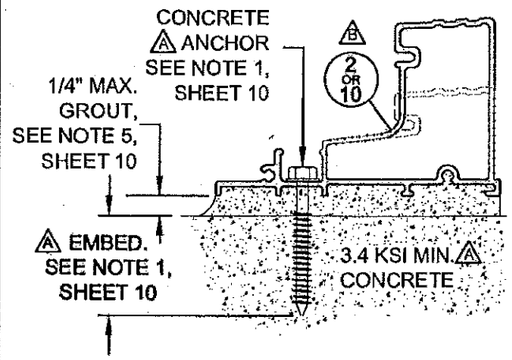

TYPICAL DOOR SILL
(DIRECT TO CONCRETE)

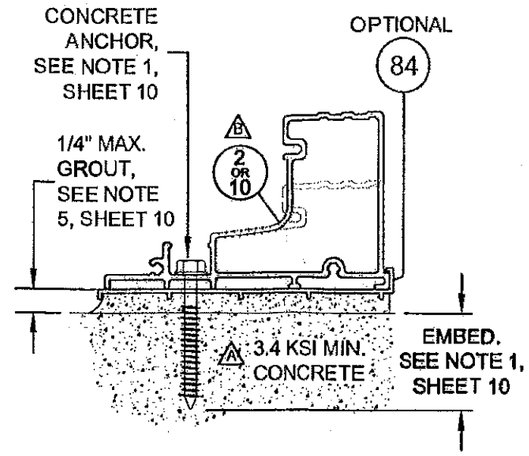

OPTIONAL DOOR SILL
(SUBSILL TO CONCRETE)

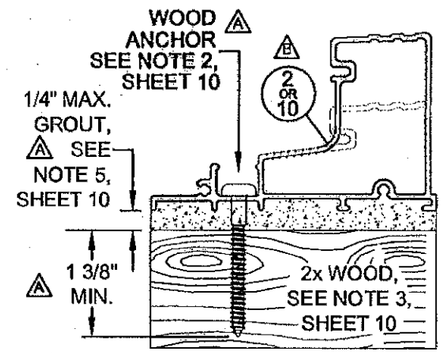

TYPICAL DOOR SILL
(DIRECT TO WOOD)

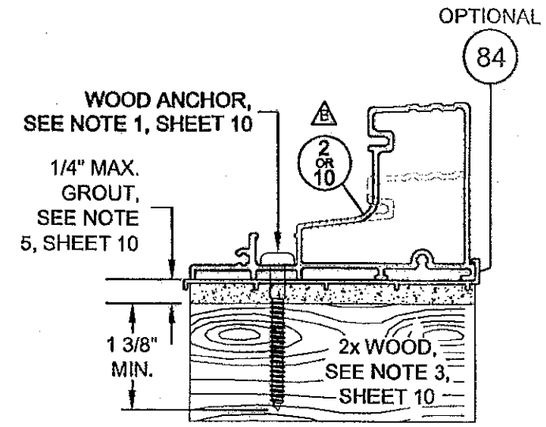

OPTIONAL DOOR SILL
(SUBSILL TO WOOD)

INTERIOR

(ALL JAMB SECTIONS)

EXTERIOR

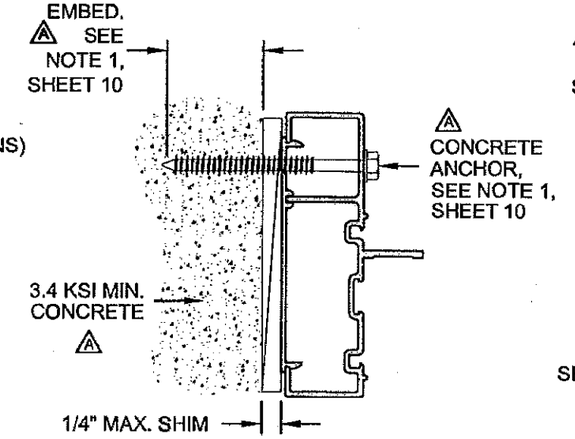

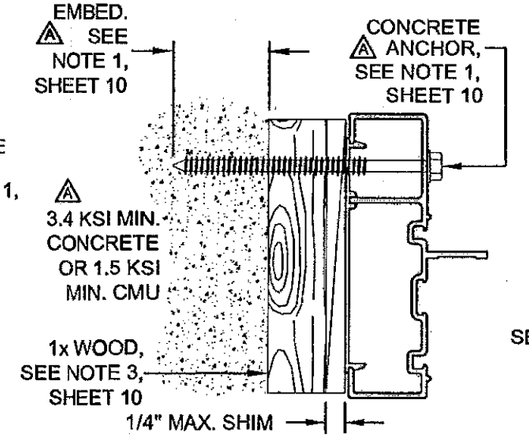

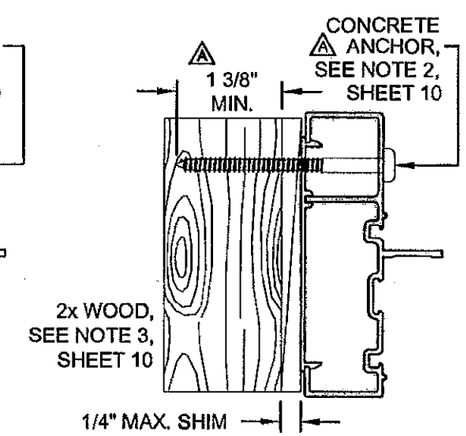

TYPICAL DOOR & SIDE LITE JAMB

PRODUCT REVISED
in complying with the Florida Building Code
Acceptance No. 11-1013.23
Expiration Date March 24, 2015
By Manuel Perez
Miami Dade Product Control

PRODUCT RENEWED
as complying with the Florida Building Code
Acceptance No. 14-1117.04
Expiration Date 03/24/2020
By
Miami Dade Product Control

ANTHONY LYNN MILLER
LICENSE
No. 58705
10/11/14
STATE OF FLORIDA
PROFESSIONAL ENGINEER

A. LYNN MILLER, P.E.
FL P.E.# 58705

Revsd By:	Date:	Revisions:	
F.K.	10/16/06	B	ADDED LOW RISE SILL OPTION. REORGANIZED DETAILS.
J.R.	09/22/09	C	NO CHANGES THIS SHEET.
J.J.	10/10/11	D	NO CHANGES THIS SHEET.
Drawn By: F.K.	Date: 10/16/06	Checked By: -	Date: -

1070 TECHNOLOGY DRIVE
NOKOMIS, FL 34275

P.O. BOX 1529
NOKOMIS, FL 34274

PGT®

Description: ANCHORAGE DETAILS (CONT.)

Title: ALUM. FRENCH DOOR & SIDE LITES, NON-IMPACT

Series/Model:	Scale:	Sheet:	Drawing No.	Rev:
FD750	1/4	11 of 11	8000-12	D