MIAMI-DADE COUNTY
DEPARTMENT OF REGULATORY AND ECONOMIC RESOURCES (RER)
BOARD AND CODE ADMINISTRATION DIVISION

MIAMI-DADE COUNTY
PRODUCT CONTROL SECTION
11805 SW 26 Street, Room 208
Miami, Florida 33175-2474
T (786) 315-2590 F (786) 315-2599
www.miamidade.gov/economy

NOTICE OF ACCEPTANCE (NOA)

Florida Shutters, Inc.
1055 Commerce Avenue
Vero Beach, FL 32960

SCOPE:
This NOA is being issued under the applicable rules and regulations governing the use of construction materials. The documentation submitted has been reviewed and accepted by Miami-Dade County RER- Product Control Section to be used in Miami Dade County and other areas where allowed by the Authority Having Jurisdiction (AHJ).

This NOA shall not be valid after the expiration date stated below. The Miami-Dade County Product Control Section (In Miami Dade County) and/or the AHJ (in areas other than Miami Dade County) reserve the right to have this product or material tested for quality assurance purposes. If this product or material fails to perform in the accepted manner, the manufacturer will incur the expense of such testing and the AHJ may immediately revoke, modify, or suspend the use of such product or material within their jurisdiction. RER reserves the right to revoke this acceptance, if it is determined by Miami-Dade County Product Control Section that this product or material fails to meet the requirements of the applicable building code.

This product is approved as described herein, and has been designed to comply with the High Velocity Hurricane Zone of the Florida Building Code.

DESCRIPTION: "Impact" Aluminum Bahama Shutter

APPROVAL DOCUMENT: Drawing No. 08-FSH-0002, titled "Impact Aluminum Bahama Shutter", sheets 1 through 9 of 9, prepared by Engineering Express, dated February 24, 2009, last revision dated October 10, 2011, signed and sealed by Frank L. Bennardo, P.E., bearing the Miami-Dade County Product Control Renewal stamp with the Notice of Acceptance number and expiration date by the Miami-Dade County Product Control Section.

MISSILE IMPACT RATING: Large and Small Missile Impact Resistant

LABELING: Each unit shall bear a permanent label with the manufacturer's name or logo, city, state, the following statement: "Miami-Dade County Product Control Approved", and NOA number, per TAS-201, TAS-202, and TAS-203, unless otherwise noted herein.

RENEWAL of this NOA shall be considered after a renewal application has been filed and there has been no change in the applicable building code negatively affecting the performance of this product.

TERMINATION of this NOA will occur after the expiration date or if there has been a revision or change in the materials, use, and/or manufacture of the product or process. Misuse of this NOA as an endorsement of any product, for sales, advertising or any other purposes shall automatically terminate this NOA. Failure to comply with any section of this NOA shall be cause for termination and removal of NOA.

ADVERTISEMENT: The NOA number preceded by the words Miami-Dade County, Florida, and followed by the expiration date may be displayed in advertising literature. If any portion of the NOA is displayed, then it shall be done in its entirety.

INSPECTION: A copy of this entire NOA shall be provided to the user by the manufacturer or its distributors and shall be available for inspection at the job site at the request of the Building Official.

This NOA **renews NOA #13-1203.08** and consists of this page 1, evidence submitted pages E-1, E-2, & E-3 as well as approval document mentioned above.
The submitted documentation was reviewed by **Helmy A. Makar, P.E., M.S.**

MIAMI-DADE COUNTY APPROVED

Helmy A. Makar
04/09/2015

NOA No. 14-1120.09
Expiration Date: 03/08/2024
Approval Date: 04/09/2015

Florida Shutters, Inc.

NOTICE OF ACCEPTANCE: EVIDENCE SUBMITTED

1. EVIDENCE SUBMITTED UNDER PREVIOUS APPROVAL #00-0411.08

A. DRAWINGS

1. *Drawing No. 1001A, titled " Impact Bahama Shutter ", prepared by W. W. Schaefer Engineering & Consulting, P.A., dated November 17, 2000, sheets 1 through 10 of 10, signed and sealed by Warren W. Schaefer, P.E.*

B. TESTS

1. *Test Report on: 1) Large Missile Impact Test, per PA-201, 2) Cyclic Wind Pressure Test, per PA-203 and 3) Uniform Static Air Pressure test per PA-202, of Bahama shutters, prepared by Hurricane Test Laboratory Inc., Report No.* ***0205-1203-99****, dated February 28, 2000, signed and sealed by Vinu J. Abraham, P.E.*

C. CALCULATIONS

1. *Anchor analysis and calculations dated 03/29/2000, Pages 1 to 14, prepared by W. W. Schaefer Engineering & Consulting, P.A., signed and sealed by Warren W. Schaefer, P.E.*

D. MATERIAL CERTIFICATION

1. *Certified Tensile Test Report No. 0AM-142, prepared by QC Metallurgical Inc., dated 03/02/2000, per ASTM E8-93, signed and sealed by Frank Grate, P.E.*

2. EVIDENCE SUBMITTED UNDER PREVIOUS APPROVAL # 04-0130.03

A. DRAWINGS

1. *Drawing No. 1001A, titled "Impact Bahama Shutters", sheets 1 through 10 of 10, prepared by W. W. Schaefer Engineering & Consulting, P.A., dated November 17, 2000, signed and sealed by Warren W. Schaefer, P.E. on March 18, 2004*

B. TESTS

1. *None.*

C. CALCULATIONS

1. *None.*

D. QUALITY ASSURANCE

1. *By Miami-Dade County Building Code Compliance Office.*

E. MATERIAL CERTIFICATIONS

1. *None.*

Helmy A. Makar, P.E., M.S.
Product Control Unit Supervisor
NOA No. 14-1120.09
Expiration Date: 03/08/2024
Approval Date: 04/09/2015

NOTICE OF ACCEPTANCE: EVIDENCE SUBMITTED

3. EVIDENCE SUBMITTED UNDER PREVIOUS APPROVAL #09-0121.13

A. DRAWINGS

1. *Drawing No. 08-FSH-0002, titled "Impact Aluminum Bahama Shutter", sheets 1 through 9 of 9, prepared by Engineering Express, dated February 24, 2009, last revision dated September 29, 2009, signed and sealed by Frank L. Bennardo, P.E.*

B. TESTS

1. *Test Report on: 1) Large Missile Impact Test, per TAS-201, 2) Cyclic Wind Pressure Test, per TAS-203 and 3) Uniform Static Air Pressure test per TAS-202, of Bahama shutters, prepared by Hurricane Test Laboratory Inc., Report No.* ***0218-0203-09****, dated July 01, 2009, signed and sealed by Vinu J. Abraham, P.E.*

C. CALCULATIONS

1. *Comparative analysis and anchor calculations dated 02/24/2009, Pages 1 to 24, prepared by Engineering Express, signed and sealed by Frank L. Bennardo, P.E., on 02/24/2009.*
2. *Revised comparative analysis and anchor calculations dated 09/29/2009, Pages 1 to 8, prepared by Engineering Express, signed and sealed by Frank L. Bennardo, P.E., on 09/29/2009.*

D. QUALITY ASSURANCE

1. *By Miami-Dade County Building Code Compliance Office.*

E. MATERIAL CERTIFICATION

1. *None.*

4. EVIDENCE SUBMITTED UNDER PREVIOUS APPROVAL # 11-1128.07

A. DRAWINGS

1. *Drawing No. 08-FSH-0002, titled "Impact Aluminum Bahama Shutter", sheets 1 through 9 of 9, prepared by Engineering Express, dated February 24, 2009, last revision dated October 10, 2011, signed and sealed by Frank L. Bennardo, P.E.*

B. TESTS

1. *None.*

C. CALCULATIONS

1. *None.*

D. QUALITY ASSURANCE

1. *By Miami-Dade County Department of Permitting, Environment, and Regulatory Affairs (PERA).*

Helmy A. Makar, P.E., M.S.
Product Control Unit Supervisor
NOA No. 14-1120.09
Expiration Date: 03/08/2024
Approval Date: 04/09/2015

NOTICE OF ACCEPTANCE: EVIDENCE SUBMITTED

E. MATERIAL CERTIFICATION
1. None.

F. STATEMENTS
1. Compliance letter in accordance with the Florida Building Code, 2010 edition, issued by Engineering Express, dated October 10, 2011, signed and sealed by Frank L. Bennardo, P.E.

5. EVIDENCE SUBMITTED UNDER PREVIOUS APPROVAL # 13-1203.08
A. DRAWINGS
1. None.

B. TESTS
1. None.

C. CALCULATIONS
1. None.

D. QUALITY ASSURANCE
1. By Miami-Dade County Department of Regulatory and Economic Resources (RER).

E. MATERIAL CERTIFICATION
1. None.

F. STATEMENTS
1. Compliance letter in accordance with the Florida Building Code, 2010 edition, issued by Engineering Express, dated November 20, 2013, signed and sealed by Frank L. Bennardo, P.E.

6. NEW EVIDENCE SUBMITTED
A. DRAWINGS
1. None.

B. TESTS
1. None.

C. CALCULATIONS
1. None.

D. QUALITY ASSURANCE
1. By Miami-Dade County Department of Regulatory and Economic Resources (RER).

E. MATERIAL CERTIFICATION
1. None.

Helmy A. Makar, P.E., M.S.
Product Control Unit Supervisor
NOA No. 14-1120.09
Expiration Date: 03/08/2024
Approval Date: 04/09/2015

IMPACT ALUMINUM BAHAMA SHUTTER

FOR USE WITHIN AND OUTSIDE THE HIGH VELOCITY HURRICAN ZONE (HVHZ)

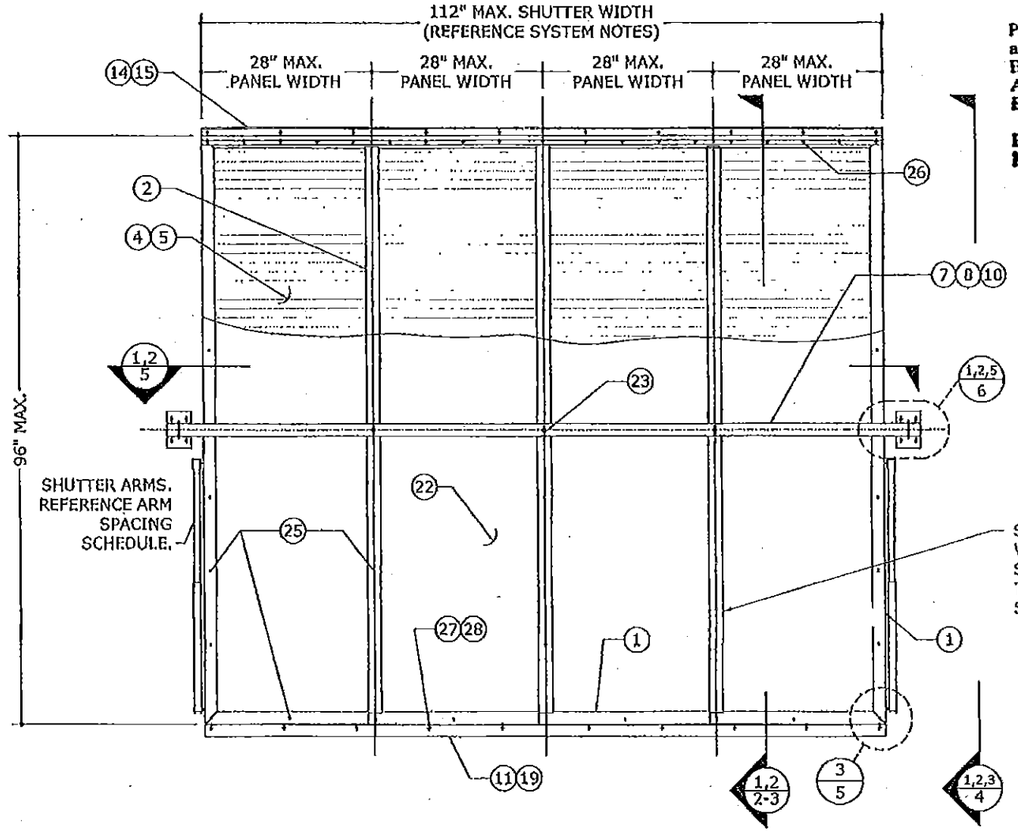

1/1 QUAD PANEL SHUTTER
N.T.S. EXTERIOR ELEV

PRODUCT RENEWED
as complying with the Florida Building Code
Acceptance No 14-1120.09
Expiration Date 03/08/2024
By
Miami Dade Product Control

PRODUCT RENEWED
as complying with the Florida Building Code
Acceptance No 13-1203.08
Expiration Date 03/08/2019
By
Miami Dade Product Control

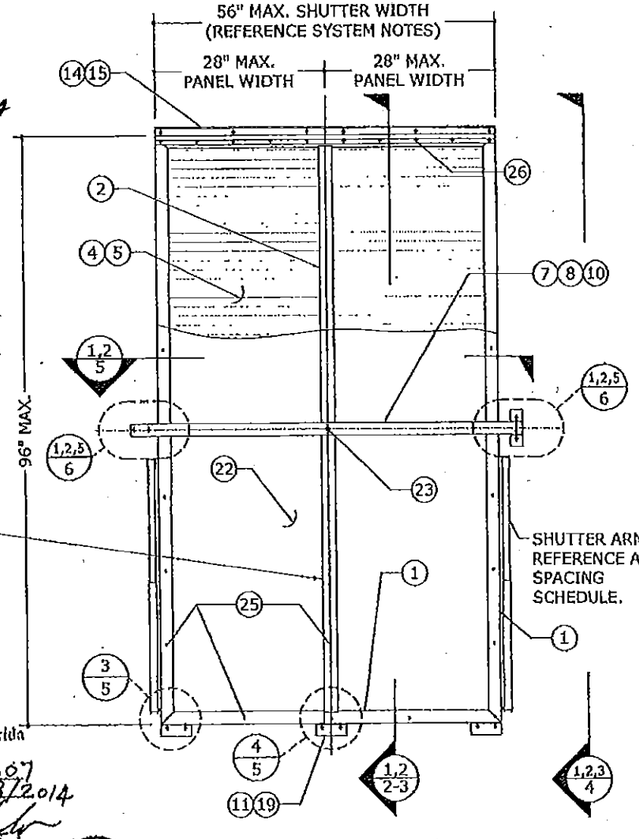

PRODUCT REVISED
as complying with the Florida Building Code
Acceptance No 11-1128.07
Expiration Date 03/08/2014
By
Miami Dade Product Control

2/1 DOUBLE PANEL SHUTTER
N.T.S. EXTERIOR ELEV

GENERAL NOTES

1. THE SYSTEM DESCRIBED HEREIN HAS BEEN DESIGNED AND TESTED IN ACCORDANCE WITH THE 2007 AND 2010 EDITIONS OF THE FLORIDA BUILDING CODE, FOR USE WITHIN AND OUTSIDE THE HIGH VELOCITY HURRICANE ZONE, PER TAS 201 / 202 / 203.
2. NO 33-1/3% INCREASE IN ALLOWABLE STRESS HAS BEEN USED IN THE DESIGN OF THIS SYSTEM. WIND LOAD DURATION FACTOR Cd=1.6 HAS BEEN USED FOR WOOD ANCHOR DESIGN.
3. POSITIVE AND NEGATIVE DESIGN PRESSURES CALCULATED FOR USE WITH THIS SYSTEM SHALL BE DETERMINED BY OTHERS ON A JOB-SPECIFIC BASIS IN ACCORDANCE WITH THE GOVERNING CODE.
4. THE SYSTEM DETAILED HEREIN IS GENERIC AND DOES NOT PROVIDE INFORMATION FOR A SPECIFIC SITE. FOR SITE CONDITIONS DIFFERENT FROM THE CONDITIONS DETAILED HEREIN, A LICENSED ENGINEER OR REGISTERED ARCHITECT SHALL PREPARE SITE SPECIFIC DOCUMENTS FOR USE IN CONJUNCTION WITH THIS DOCUMENT.
5. PERMIT HOLDER SHALL VERIFY THE ADEQUACY OF THE EXISTING STRUCTURE TO WITHSTAND SUPERIMPOSED LOADS.
6. SHUTTER SIZE SHALL BE RESTRICTED BY THE MAXIMUM DIMENSIONS SHOWN HEREIN.
7. EACH SHUTTER ASSEMBLY SHALL BE PERMANENTLY LABELED WITH THE FOLLOWING:
   FLORIDA SHUTTERS, INC.
   VERO BEACH, FLORIDA
   MIAMI-DADE PRODUCT CONTROL APPROVED
8. ALL BOLTS & WASHERS SHALL BE ZINC COATED STEEL, GALVANIZED STEEL, OR STAINLESS STEEL WITH A MINIMUM TENSILE YIELD STRENGTH OF 60 KSI. ALL 3/16"Ø OR 1/4"Ø POP RIVETS SHALL BE 5056-H32 ALUMINUM ALLOY OR STRONGER.
9. ALL STEEL IN CONTACT WITH ALUMINUM SHALL BE PAINTED OR PLATED AS PRESCRIBED IN THE ABOVE-NOTED BUILDING CODE.

SYSTEM NOTES

1. FOR INSTALLATIONS WITH STORM BARS, ANY NUMBER OF PANELS MAY BE USED, PROVIDED THAT THE OVERALL SHUTTER WIDTH DOES NOT EXCEED 112" MAX AND THE PANEL WIDTHS DO NOT EXCEED 28" MAX.
2. FOR INSTALLATIONS WITHOUT STORM BARS, ANY NUMBER OF PANELS MAY BE USED AND THE SHUTTER MAY BE INSTALLED WITH AN UNLIMITED OVERALL WIDTH, PROVIDED THAT THE PANEL WIDTHS DO NOT EXCEED 28" MAX.

MAXIMUM ALLOWABLE DESIGN PRESSURES:	-80.0 PSF +80.0 PSF

* REFERENCE DESIGN SCHEDULES HEREIN FOR ADDITIONAL LIMITATIONS TO ALLOWABLE DESIGN PRESSURES, AS DETERMINED BY SHUTTER SPAN, STORM BAR CONFIGURATIONS, AND ANCHORAGE.

ARM SPACING TABLE

SHUTTER HEIGHT	MAX ARM SPACING	
	2-PANEL SHUTTERS	3+ PANEL SHUTTERS
0-48"	56"	56"
49"-60"	56"	45"
61"-72"	56"	38"
73"-84"	56"	32"
85"-96"	56"	28"

VALUES IN THIS TABLE ARE BASED ON PRESSURES RESULTING FROM 3-SECOND GUST WIND SPEEDS UP TO 90 MPH

FRANK L. BENNARDO, P.E.
#PE0046519
10/10/2011
ENGINEERING EXPRESS®
160 SW 12th AVENUE, #106
DEERFIELD BEACH, FL 33442
Ph: (954) 354-0660 Fax: (954) 354-0443
WWW.ENGEXP.COM
CERT OF AUTH #28845
A FRANK L. BENNARDO, P.E., INC. INNOVATION

FLORIDA SHUTTERS, INC.
1055 COMMERCE AVENUE
VERO BEACH, FL 32960
(772) 569 - 2200

"IMPACT" ALUMINUM BAHAMA SHUTTER
MIAMI-DADE NOTICE OF ACCEPTANCE

REMARKS	DRWN	CHKD	DATE
INITIAL ISSUE	RKB	GL	02/24/09
REVISED PER BOCO COMMENT	KL	FLB	05/29/09
ADD FBC 2010	KL	FLB	10/10/11

08-FSH-0002
SCALE: 04
PAGE DESCRIPTION:

9

1

E:\07 Project Files\Florida Shutters (FSH)\08-FSH-0002 Bahama Shutter\08-FSH-0002_04a Impact Bahama Shutter (NOA).dwg
10/10/2011 - 5:02pm keithl

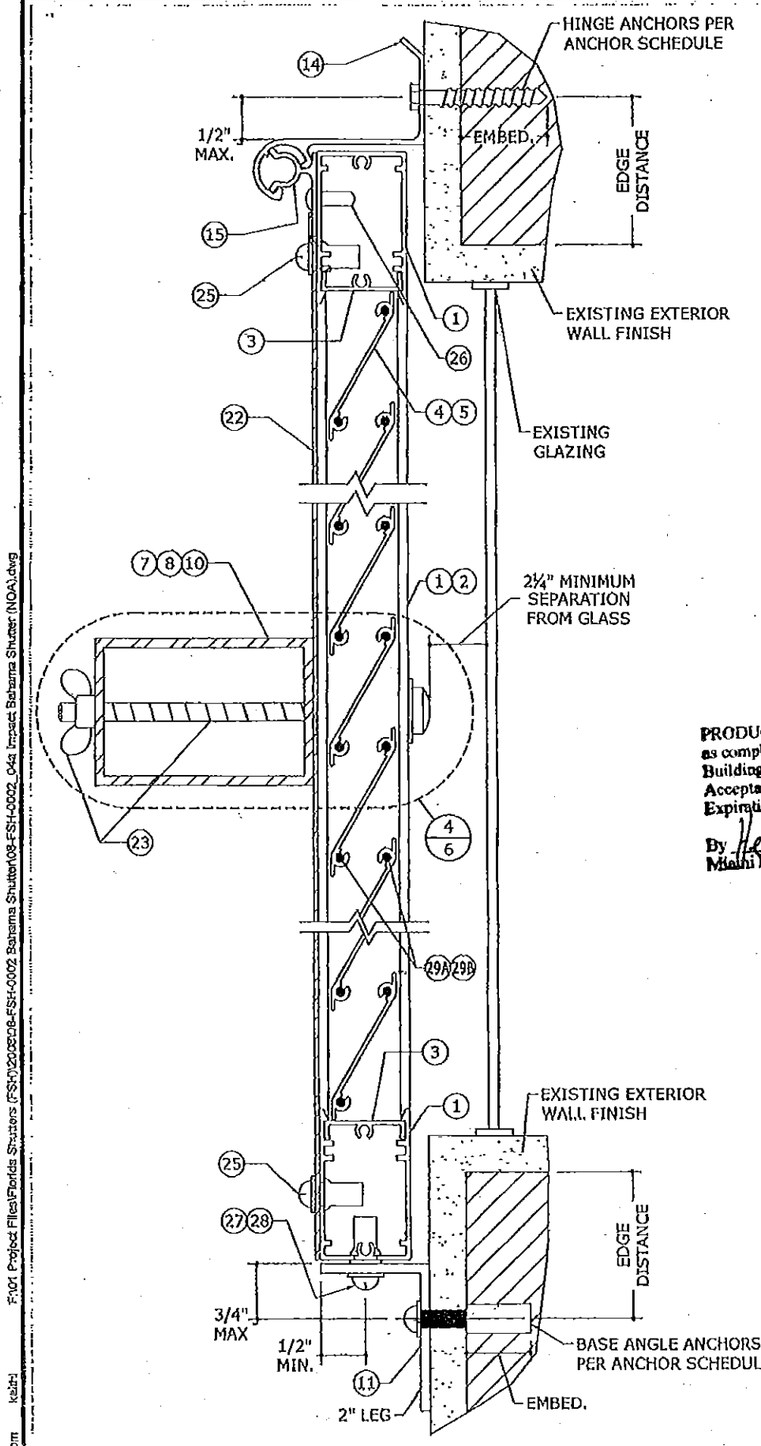

1/2 TYPICAL FACE MOUNT
6" = 1'-0" VERT. SECTION

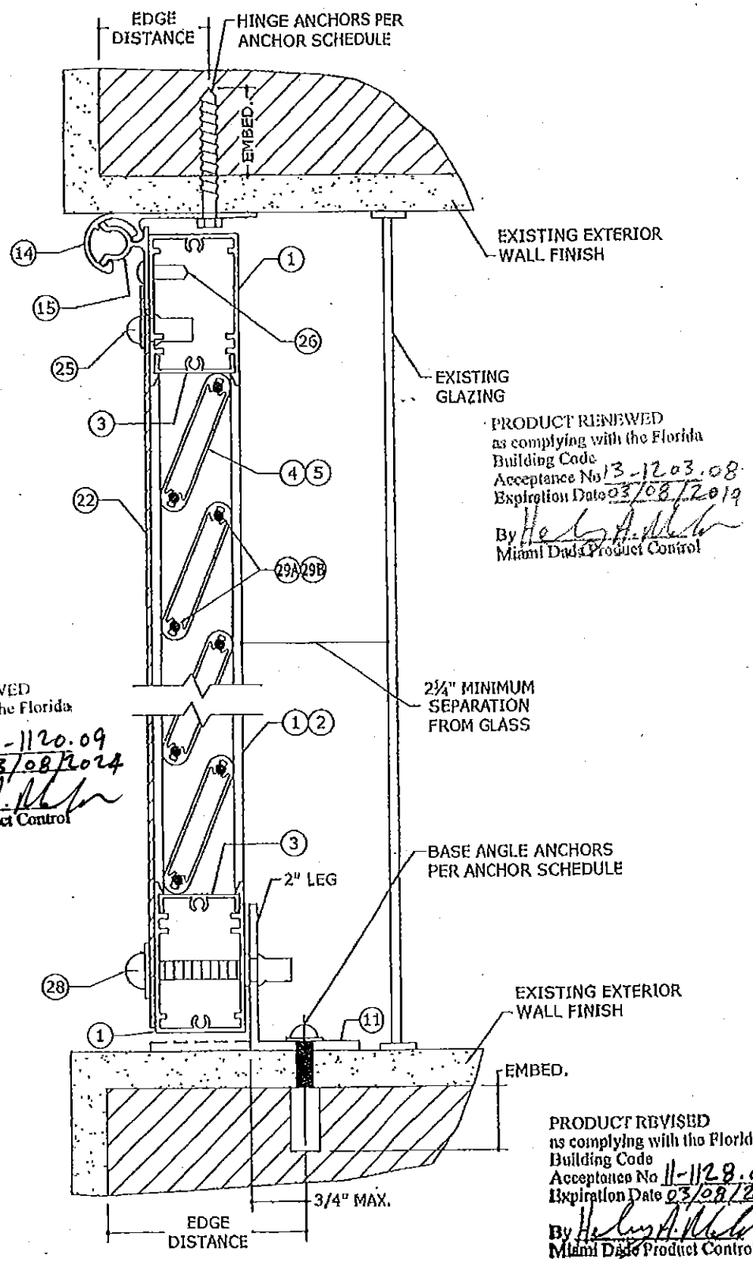

2/2 ALTERNATE TRAP MOUNT
6" = 1'-0" VERT. SECTION

PRODUCT RENEWED
as complying with the Florida Building Code
Acceptance No 14-1120.09
Expiration Date 03/08/2024
By
Miami Dade Product Control

PRODUCT RENEWED
as complying with the Florida Building Code
Acceptance No 13-1203.08
Expiration Date 03/08/2019
By
Miami Dade Product Control

PRODUCT REVISED
as complying with the Florida Building Code
Acceptance No 11-1128.07
Expiration Date 03/08/2014
By
Miami Dade Product Control

ANCHOR SCHEDULE:

BASE ANGLE ANCHORS:
- 1/4"-20 POWERS CALK-INS: **1" MAX FROM ENDS AND 6.5" O.C. MAX** TO MASONRY/CONCRETE WITH 7/8" MIN EMBED, AND 2" MIN EDGE DISTANCE.
- 1/4" ELCO PANELMATES (MALE OR FEMALE): **1" MAX FROM ENDS AND 6.5" O.C. MAX** TO MASONRY/CONCRETE WITH 1-1/4" MIN EMBED, AND 2" MIN EDGE DISTANCE.
- 1/4" ELCO PANELMATES (MALE OR FEMALE): **1" MAX FROM ENDS AND 10" O.C. MAX** TO G=0.55 MIN WOOD WITH 1-7/8" MIN THREAD PENETRATION, AND 3/4" MIN EDGE DISTANCE.

HINGE ANCHORS:
- 1/4" TAPCONS (ITW): **1" MAX FROM ENDS AND 5" O.C. MAX** THRU WOOD BUCKS OR DIRECTLY INTO MASONRY/CONCRETE WITH 1-1/4" MIN EMBED, AND 2-1/2" MIN EDGE DISTANCE.
- #12 WOOD SCREWS: **1" MAX FROM ENDS AND 12" O.C. MAX** TO G=0.55 MIN WOOD WITH 1-1/2" MIN THREAD PENETRATION, AND 3/4" MIN EDGE DISTANCE.

STORM BAR ANCHORS:
- 1/4"-20 POWERS CALK-IN ANCHORS TO MASONRY/CONCRETE WITH 7/8" MIN EMBED, 2-1/2" MIN SPACING, AND 2½" MIN EDGE DISTANCE.
- 1/4" ELCO PANELMATES (MALE OR FEMALE) TO MASONRY/CONCRETE WITH 1-1/4" MIN EMBED, 2-1/2" MIN SPACING, AND 2" MIN EDGE DISTANCE.
- 1/4" ELCO PANELMATES (MALE OR FEMALE) TO G=0.55 MIN WOOD WITH 1-7/8" MIN THREAD PENETRATION, 1-1/2" MIN SPACING, AND 3/4" MIN EDGE DISTANCE.

ANCHOR NOTES:

1. ANCHORS SHALL BE INSTALLED IN ACCORDANCE WITH MANUFACTURERS' RECOMMENDATIONS.
2. TAPCONS SHALL BE MANUFACTURED BY ITW. "ELCO PANELMATE" ANCHORS FOR USE IN CONCRETE, HOLLOW BLOCK OR WOOD MAY BE MALE OR FEMALE.
3. WHERE ANCHORS FASTEN TO NARROW FACE OF STUD FRAMING, ANCHOR SHALL BE LOCATED IN CENTER OF NOMINAL 2x (MIN) WOOD STUD (i.e. 3/4" EDGE DISTANCE IS ACCEPTABLE FOR ANCHORS TO WOOD FRAMING).
4. WOOD HOST STRUCTURE SHALL BE "SOUTHERN PINE" G=0.55 OR GREATER DENSITY.
5. MINIMUM EMBEDMENT SHALL BE AS NOTED IN ANCHOR SCHEDULE. MINIMUM EMBEDMENT AND EDGE DISTANCE EXCLUDES STUCCO, FOAM, BRICK, AND OTHER WALL FINISHES.
6. WHERE EXISTING STRUCTURE IS WOOD FRAMING, EXISTING CONDITIONS MAY VARY. FIELD VERIFY THAT FASTENERS ARE INTO ADEQUATE WOOD FRAMING MEMBERS, NOT INTO PLYWOOD.
7. WOOD BUCKS (BY OTHERS) SHALL BE ANCHORED PROPERLY TO TRANSFER LOADS TO THE EXISTING STRUCTURE.
8. MACHINE SCREWS SHALL HAVE MINIMUM OF 1/2" ENGAGEMENT OF THREADS IN BASE ANCHOR AND MAY HAVE EITHER A PAN HEAD, TRUSS HEAD, OR WAFER HEAD ("SIDEWALK BOLT") U.N.O.

FRANK L. BENNARDO, P.E.
PE0046549
10/10/2011
ENGINEERING EXPRESS®
160 SW 12th AVENUE, #106
DEERFIELD BEACH, FL 33442
PH: (954) 354-0650 FAX: (954) 354-0443
WWW.ENGEXP.COM
CERT OF AUTH #28555
A FRANK L. BENNARDO, P.E., INC. INNOVATION

FLORIDA SHUTTERS, INC.
1055 COMMERCE AVENUE
VERO BEACH, FL 32960
(772) 569 - 2200

"IMPACT" ALUMINUM BAHAMA SHUTTER
MIAMI-DADE NOTICE OF ACCEPTANCE

REMARKS	DRWN	CHKD	DATE
PERMIT ISSUE	RKB	CL	10/24/08
REV PER BCDO COMMENT	KL	FLB	09/23/09
2010 FBC	KL	FLB	10/10/11

08-FSH-0002
SCALE: 04
PAGE DESCRIPTION:
9
2

F:\01 Project Files\Florida Shutters (FSH)\2008\08-FSH-0002 Bahama Shutter\08-FSH-0002_04a Impact Bahama Shutter (NOA).dwg
10/10/2011 - 5:22pm kaleb

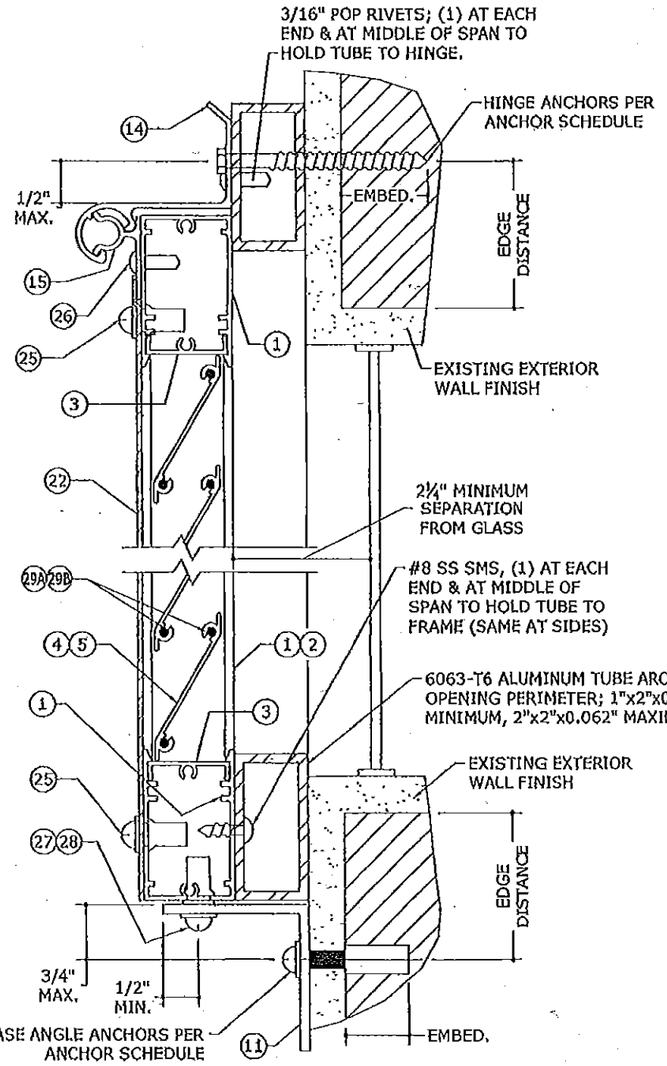

1/3 BUILD-OUT WALL MOUNT
6" = 1'-0" VERT SECTION

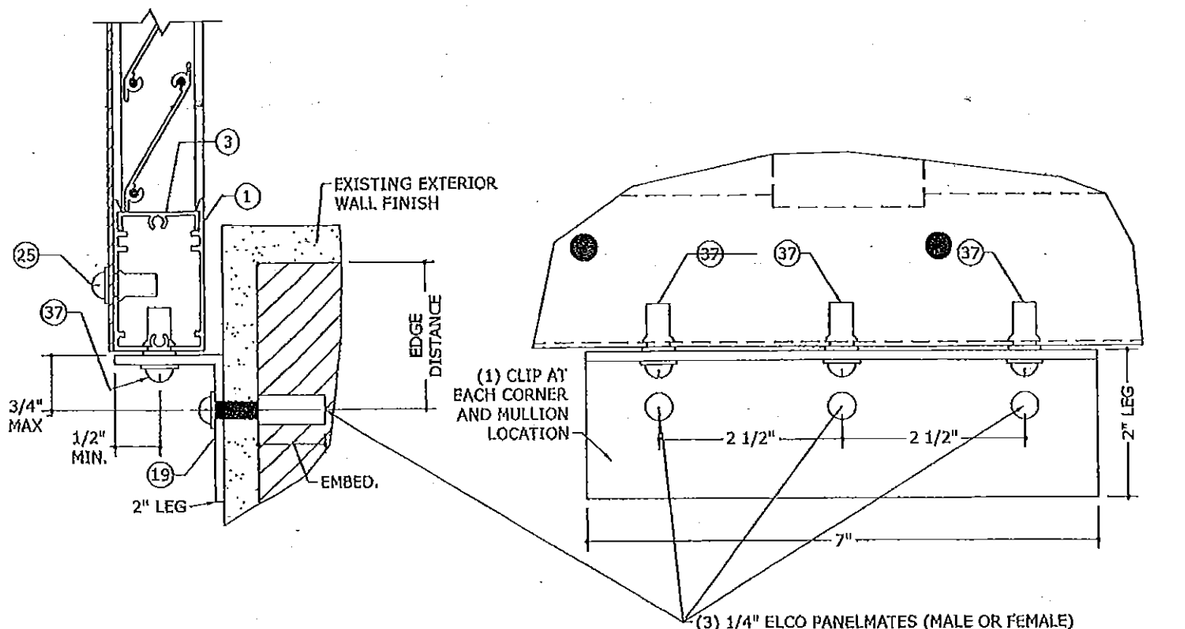

2/3 OPTIONAL BASE CLIP
6" = 1'-0" EXTERIOR ELEV/VERT SECTION

PRODUCT RENEWED
as complying with the Florida Building Code
Acceptance No 14-1120.09
Expiration Date 03/08/2024
By
Miami Dade Product Control

PRODUCT RENEWED
as complying with the Florida Building Code
Acceptance No 13-1203.08
Expiration Date 03/08/2019
By
Miami Dade Product Control

PRODUCT REVISED
as complying with the Florida Building Code
Acceptance No 11-1128.07
Expiration Date 03/08/2014
By
Miami Dade Product Control

FRANK L. BENNARDO, P.E.
PE0046549
10/10/2011

ENGINEERING EXPRESS®
160 SW 12th AVENUE, #106
DEERFIELD BEACH, FL 33442
PH: (954) 354-0660 FAX: (954) 354-0443
WWW.ENGEXP.COM
CERT OF AUTH #8885
A. FRANK L. BENNARDO, P.E., INC. INNOVATION

FLORIDA SHUTTERS, INC.
1055 COMMERCE AVENUE
VERO BEACH, FL 32960
(772) 569 - 2200

"IMPACT" ALUMINUM BAHAMA SHUTTER
MIAMI-DADE NOTICE OF ACCEPTANCE

REMARKS	DRWN	CHKD	DATE
INIT ISSUE	RKB	CL	02/24/09
REV PER BCCO COMMENT	KL	FLB	09/29/09
2010 FBC	KL	FLB	10/10/11

08-FSH-0002
SCALE: 04
PAGE DESCRIPTION:

3

F:\01 Project Files\Florida Shutters (FSH)\2008\08-FSH-0002_04a Impact Bahama Shutter (NOA).dwg
10/10/2011 - 5:02pm kklehl

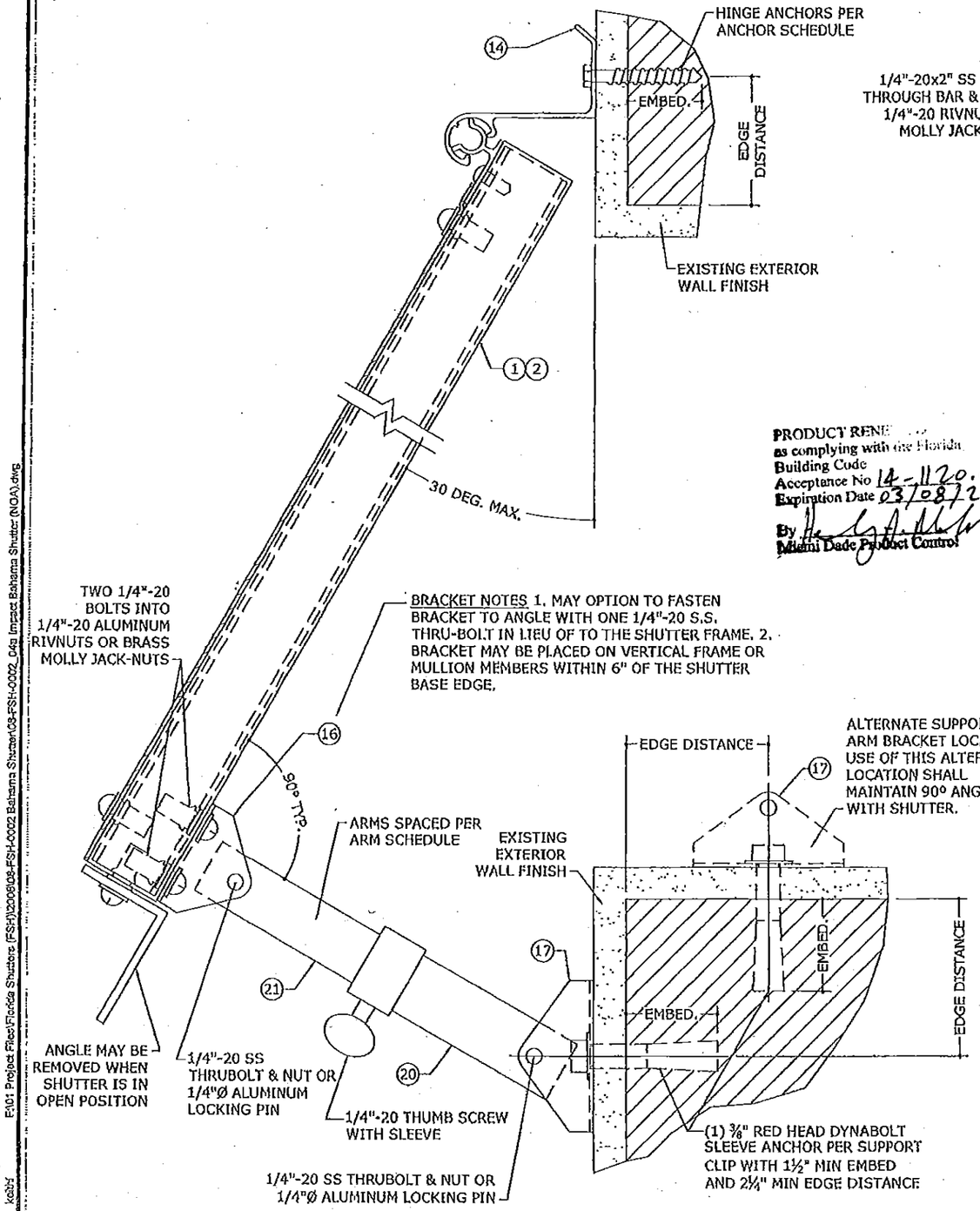

1 / 4 OPEN SHUTTER MOUNT
6" = 1'-0" VERT SECTION

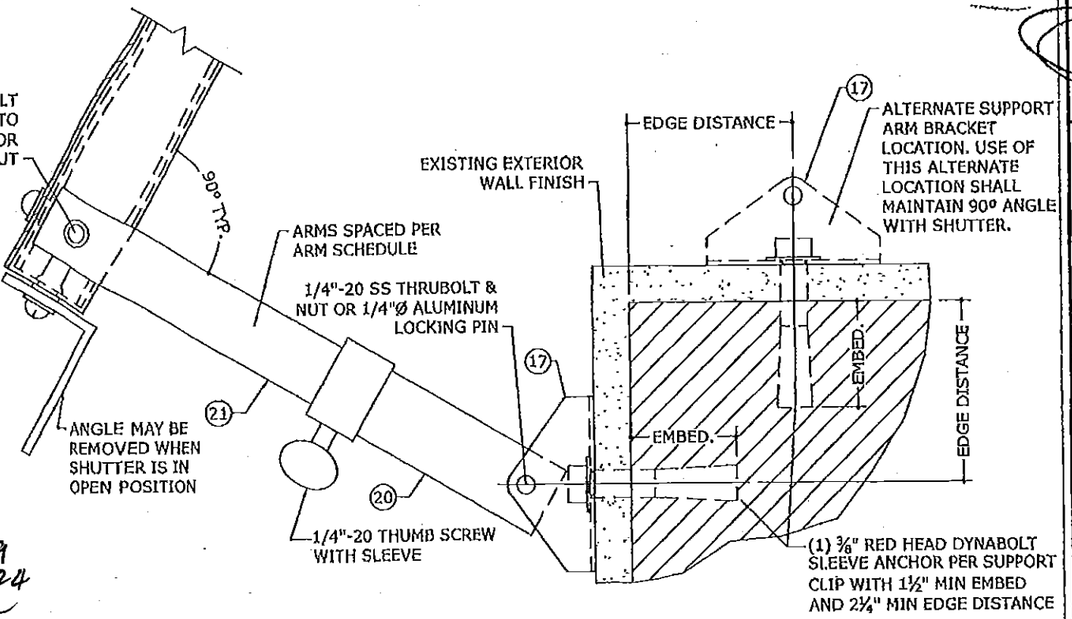

2 / 4 ALTERNATE OPEN SHUTTER MOUNT (FOR END ARMS ONLY)
6" = 1'-0" VERT SECTION

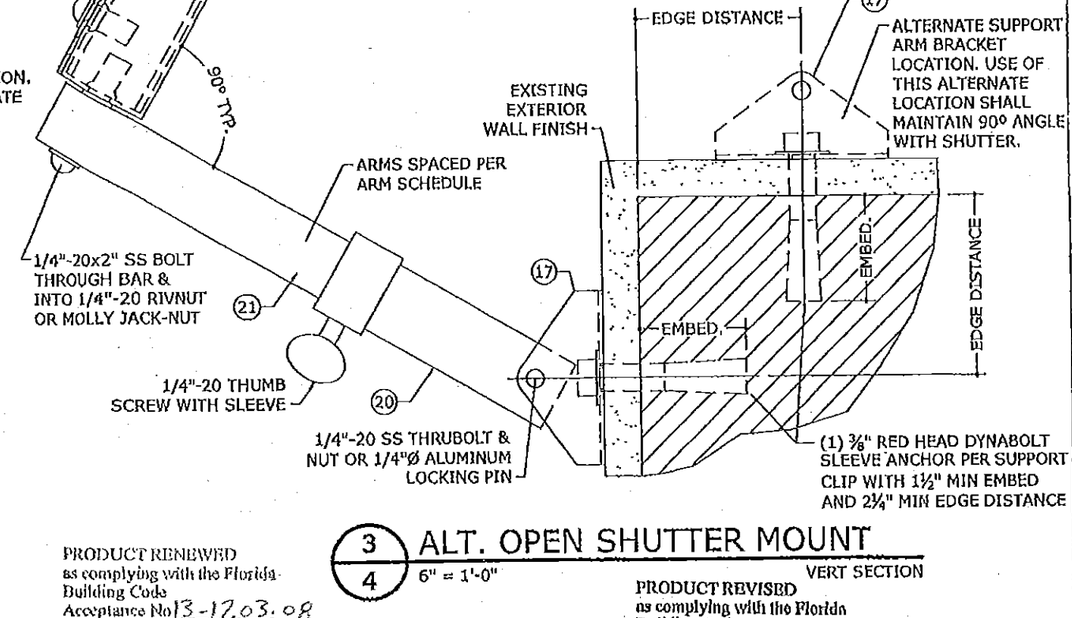

3 / 4 ALT. OPEN SHUTTER MOUNT
6" = 1'-0" VERT SECTION

PRODUCT RENEWED
as complying with the Florida Building Code
Acceptance No 13-1203.08
Expiration Date 03/08/2019
By Miami Dade Product Control

PRODUCT RENEWED
as complying with the Florida Building Code
Acceptance No 14-1120.09
Expiration Date 03/08/2024
By Miami Dade Product Control

PRODUCT REVISED
as complying with the Florida Building Code
Acceptance No 11-1128.07
Expiration Date 03/08/2014
By Miami Dade Product Control

FRANK L. BENNARDO, P.E. #PE0046549
10/10/2011
ENGINEERING EXPRESS®
160 SW 12th AVENUE, #106
DEERFIELD BEACH, FL 33442
PH: (954) 354-0660 FAX: (954) 354-0443
WWW.ENGEXP.COM
CERT OF AUTH #28265
A. FRANK L. BENNARDO, P.E., INC. INNOVATION

FLORIDA SHUTTERS, INC.
1055 COMMERCE AVENUE
VERO BEACH, FL 32960
(772) 569 - 2200

"IMPACT" ALUMINUM BAHAMA SHUTTER
MIAMI-DADE NOTICE OF ACCEPTANCE

REMARKS	DRWN/CHKD	DATE
INIT ISSUE	RKB CL	02/24/09
REV PER 3000 COMMENT	KL RLB	09/29/09
REV PER FBC 2010	KL FLB	10/10/11

08-FSH-0002
SCALE: - 04
PAGE DESCRIPTION:
-
9
4

E:\01 Project Files\Florida Shutters (FSH)\2008\08-FSH-0002 Bahama Shutter\08-FSH-0002_04a Impact Bahama Shutter (NOA).dwg
10/10/2011 - 5:02pm kobby

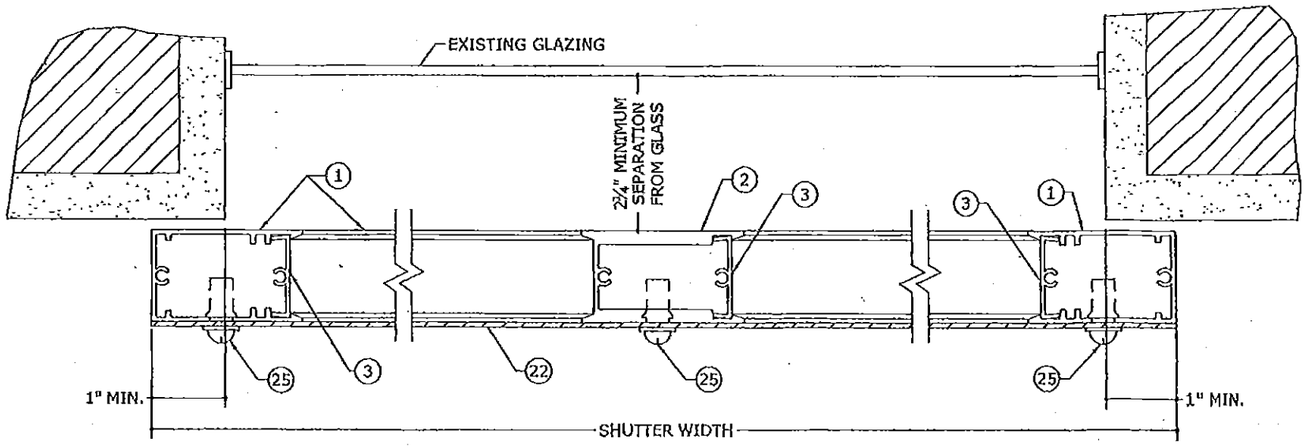

NOTE: STORM BARS NOT SHOWN FOR CLARITY

1/5 TYPICAL FACE MOUNT
6" = 1'-0" HORIZ SECTION

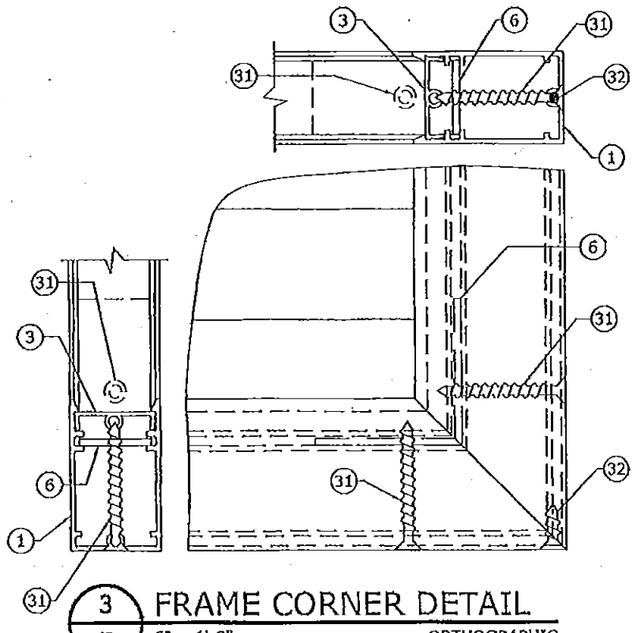

3/5 FRAME CORNER DETAIL
6" = 1'-0" ORTHOGRAPHIC

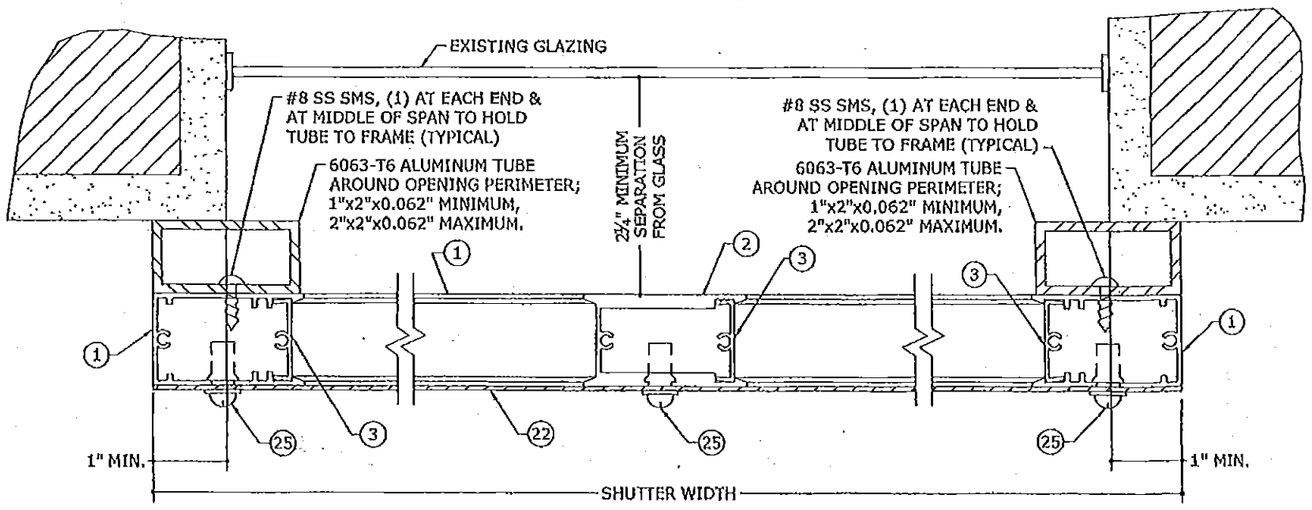

NOTE: STORM BARS NOT SHOWN FOR CLARITY

2/5 BUILD-OUT MOUNT
6" = 1'-0" HORIZ SECTION

PRODUCT RENEWED
as complying with the Florida Building Code
Acceptance No 14-1120.09
Expiration Date 03/08/2024
By
Miami Dade Product Control

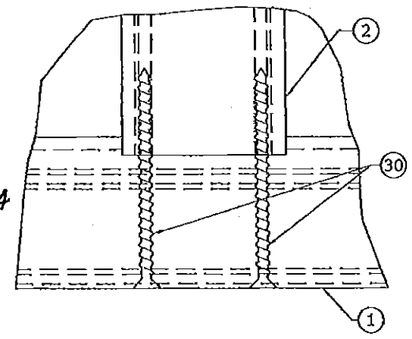

4/5 MULLION CONNECTION
6" = 1'-0" ELEVATION

PRODUCT RENEWED
as complying with the Florida Building Code
Acceptance No 13-1203.08
Expiration Date 03/08/2019
By
Miami Dade Product Control

PRODUCT REVISED
as complying with the Florida Building Code
Acceptance No 11-1128.07
Expiration Date 03/08/2014
By
Miami Dade Product Control

FRANK L. BENNARDO, P.E.
#PE0046549
10/10/2011
ENGINEERING EXPRESS®
160 SW 12th AVENUE, #106
DEERFIELD BEACH, FL 33442
PH: (954) 354-0660 FAX (954) 354-0443
WWW.ENGEXP.COM
CERT OF AUTH #28555
A FRANK L. BENNARDO, P.E., INC. INNOVATION

FLORIDA SHUTTERS, INC.
1055 COMMERCE AVENUE
VERO BEACH, FL 32960
(772) 569 - 2200

"IMPACT" ALUMINUM BAHAMA SHUTTER
MIAMI-DADE NOTICE OF ACCEPTANCE

REMARKS	DRWN	CHKD	DATE
NOT ISSUE	RKG	CL	02/24/08
REV PER BOCO COMMENT	KL	FLB	09/23/09
2010 FBC	KL	FLB	10/13/11

08-FSH-0002
SCALE: 04
PAGE DESCRIPTION:
9
5

10/10/2011 - 5:02pm Keith F:\01 Project Files\Florida Shutters (FSH)\08\08-FSH-0002 Bahama Shutter\08-FSH-0002_04a Impact Ba

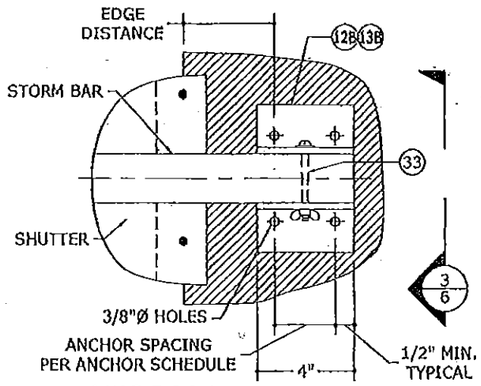

1/6 STORM BAR CONNECTION TYPE 'A'
2" = 1'-0" EXTERIOR ELEV

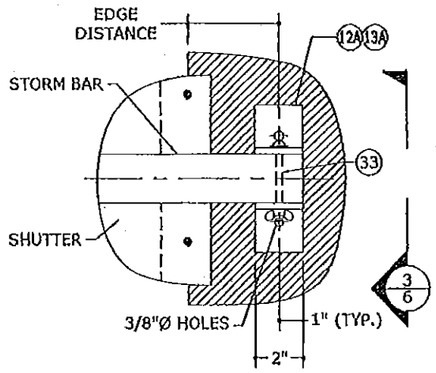

2/6 STORM BAR CONNECTION TYPE 'B'
2" = 1'-0" EXTERIOR ELEV

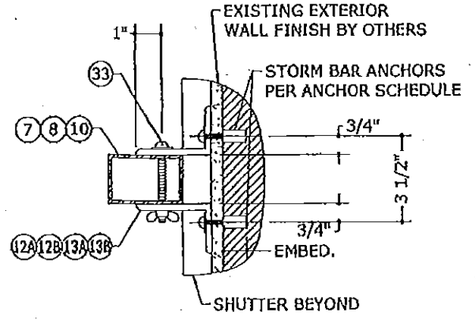

3/6 STORM BAR CONNECTION SECTION
2" = 1'-0" VERT SECTION

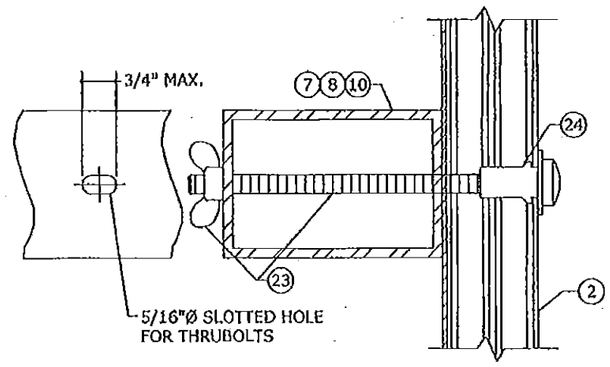

4/6 STORM BAR TO MULLION CONNECTION DETAIL
6" = 1'-0" VERT SECTION

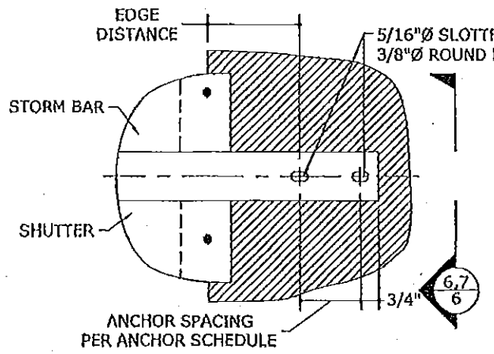

5/6 STORM BAR CONNECTION TYPE 'C'
2" = 1'-0" EXTERIOR ELEV

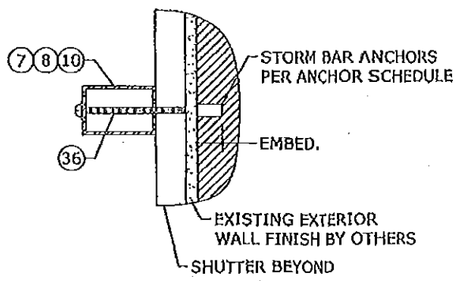

6/6 STORM BAR CONNECTION SECTION
2" = 1'-0" VERT SECTION

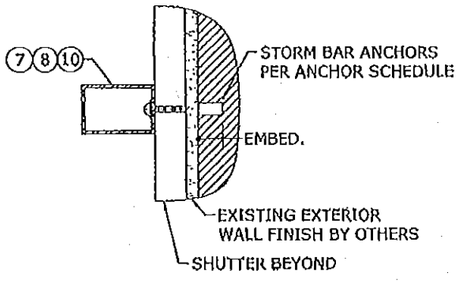

7/6 ALT. STORM BAR CONNECTION SECTION
2" = 1'-0" VERT SECTION

PRODUCT RENEWED
as complying with the Florida
Building Code
Acceptance No 13-1203.08
Expiration Date 03/08/2019
By
Miami Dade Product Control

PRODUCT RENEWED
as complying with the Florida
Building Code
Acceptance No 14-1120.09
Expiration Date 03/08/2024
By
Miami Dade Product Control

PRODUCT REVISED
as complying with the Florida
Building Code
Acceptance No 11-1128.07
Expiration Date 03/08/2014
By
Miami Dade Product Control

FRANK L. BENNARDO, P.E.
PE0046549
10/10/2011

ENGINEERING EXPRESS®
160 SW 12th AVENUE, #106
DEERFIELD BEACH, FL 33442
PH: (954) 354-0660 FAX: (954) 354-0443
WWW.ENGEXP.COM
CERT OF AUTH #8685
A. FRANK L. BENNARDO, P.E., INC. INNOVATION.

FLORIDA SHUTTERS, INC.
1055 COMMERCE AVENUE
VERO BEACH, FL 32960
(772) 569 - 2200

"IMPACT" ALUMINUM BAHAMA SHUTTER
MIAMI-DADE NOTICE OF ACCEPTANCE

REMARKS	DRWN	CHKD	DATE
INIT ISSUE	RKB	GL	02/24/09
REVPER RECD COMMENT	KL	FLB	09/29/09
2010 FBC	KL	FLB	10/10/11

08-FSH-0002
SCALE: 04
PAGE DESCRIPTION:
9
6

10/10/2011 - 5:39pm kathi S:\01 Project Files\Florida Shutters (FSH)\2008\08-FSH-0002 Bahama Shutter\08-FSH-0002_04a Impact Bahama Shutter (NOA).dwg

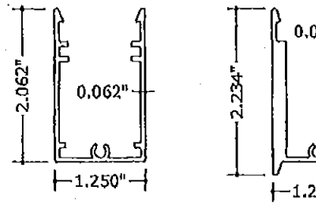

1 FRAME
6063-T6 ALUM.

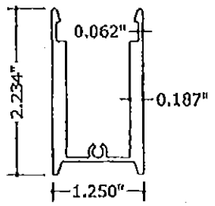

2 MULLION
6061-T6 ALUM.

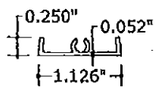

3 FRAME CAP
6063-T6 ALUM.

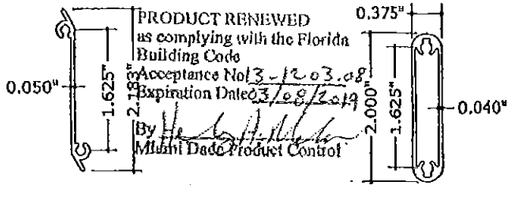

4 Z-BLADE
6063-T6 ALUM.

5 HOLLOW BLADE
6063-T6 ALUM.

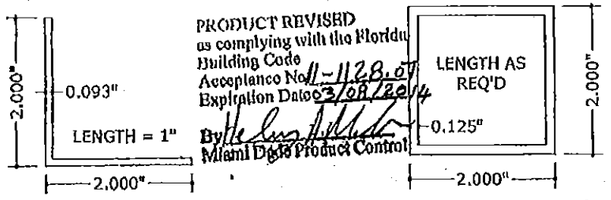

6 FRAME CORNER KEY
6063-T5 ALUM.

7 STORM BAR 'A'
6061-T6 OR 6005-T5 ALUM.

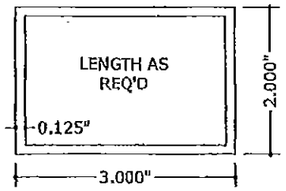

8 STORM BAR 'B'
6061-T6 OR 6005-T5 ALUM.

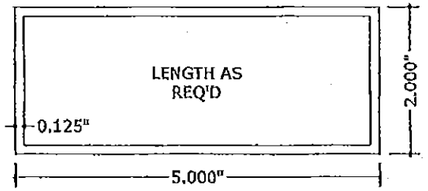

10 STORM BAR 'C'
6061-T6 OR 6005-T5 ALUM.

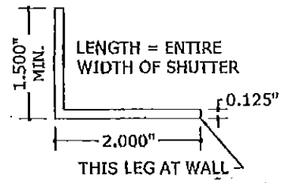

11 BASE ANGLE
6063-T5 ALUM.

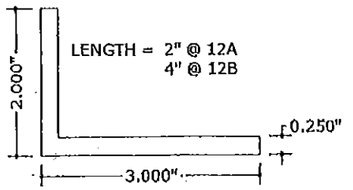

12A 12B STORM BAR CONNECTION ANGLE
6063-T5 ALUM.

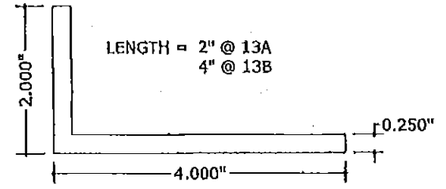

13A 13B STORM BAR CONNECTION ANGLE
6063-T5 ALUM.

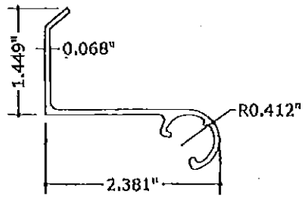

14 FEMALE HINGE
6061-T6 ALUM.

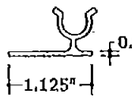

15 MALE HINGE
6061-T6 ALUM.

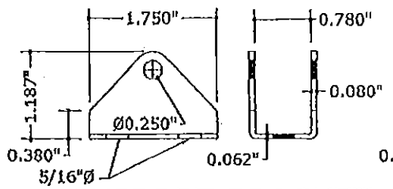

16 SUPPORT BRACKET
6063-T6 ALUM.

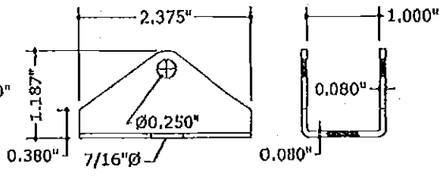

17 SUPPORT BRACKET
6063-T6 ALUM.

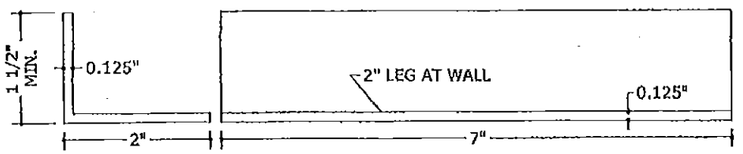

19 OPTIONAL BASE ANGLE
6063-T5 ALUM.

PRODUCT RENEWED
as complying with the Florida
Building Code
Acceptance No 14-1120.09
Expiration Date 03/08/2024
By
Miami Dade Product Control

BILL OF MATERIALS

NO.	DESCRIPTION	NOTES
1	SHUTTER FRAME	6063-T6 ALUMINUM
2	MULLION	6061-T6 ALUMINUM
3	FRAME CAP	6063-T6 ALUMINUM
4	Z-BLADE	6063-T6 ALUMINUM
5	HOLLOW BLADE	6063-T6 ALUMINUM
6	L2"x2"x0.093" FRAME CORNER KEY	6063-T5 ALUMINUM; PLACED AT EACH FRAME CORNER
7	L2"x2"x⅛" STORM BAR	6061-T1 OR 6005-T5 ALUMINUM
8	L3"x2"x⅛" STORM BAR	6061-T1 OR 6005-T5 ALUMINUM
9	-	-
10	L5"x2"x⅛" STORM BAR	6061-T1 OR 6005-T5 ALUMINUM
11	L2"x1.5"MINx⅛" CONT. BASE ANGLE	6063-T5 ALUMINUM; SECURES SHUTTERS CLOSED
12A	L3"x2"x¼" STORM BAR END CONNECTOR	6063-T5 ALUMINUM; 2" LONG; USED WITH-OUT BUILD-OUT
12B	L3"x2"x¼" STORM BAR END CONNECTOR	6063-T5 ALUMINUM; 4" LONG; USED WITH-OUT BUILD-OUT
13A	L4"x2"x¼" STORM BAR END CONNECTOR	6063-T5 ALUMINUM; 2" LONG; USED WITH BUILD-OUT
13B	L4"x2"x¼" STORM BAR END CONNECTOR	6063-T5 ALUMINUM; 2" LONG; USED WITH BUILD-OUT
14	FEMALE TOP HINGE	6061-T6 ALUMINUM; FULL WIDTH OF SHUTTER
15	MALE TOP HINGE	6061-T6 ALUMINUM; FULL WIDTH OF SHUTTER
16	SHUTTER ARM SUPPORT BRACKET	6063-T6 ALUMINUM; ARM TO SHUTTER BRACKET
17	SHUTTER ARM SUPPORT BRACKET	6063-T6 ALUMINUM; ARM TO WALL BRACKET
18	-	-
19	L2"x1.5"MINx⅛" BASE ANGLE (7" LONG)	6063-T6 ALUMINUM; (1) AT EA. VERTICAL SHUTTER MEMBER
20	OUTER PORTION OF SHUTTER ARM	6063-T6 ALUMINUM
21	INNER PORTION OF SHUTTER ARM	6063-T6 ALUMINUM
22	0.050" THICK ALUMINUM HURRICANE SHEET	3003-H14 ALUM.; MIN SEAM OVERLAPS = 2" AT MULLIONS
23	¼" STL. BOLT OR THREADED ROD W/WING NUT	STORM BAR TO SHUTTER MULLIONS
24	¼" MOLLY JACK NUT OR 6061-T6 RIVNUT	FOR SETTING OF NO. 23 ABOVE INTO MULLIONS
25	1/4-20 S.S. BOLTS & 6061-T6 RIVNUTS	AT FRAME CORNERS & 12" MAX O.C. (SHEET TO SHUTTER)
26	3/16" 5052-ALUMINUM POP RIVETS	1" FROM HINGE ENDS & 6" MAX O.C. (TOP HINGE TO SHUTTER)
27	3/16" 5052-ALUMINUM POP RIVETS	1" FROM HINGE ENDS & 6" MAX O.C. (BASE ANGLE TO SHUTTER)
28	1/4-20 S.S. BOLTS & 6061-T6 RIVNUTS	1" FROM ENDS & 12" MAX O.C. (BASE ANGLE TO SHUTTER)
29A	NO. 6 x ⅝" S.S. P.H. SMS	SECURES Z-BLADE END TO FRAME CAP (2 PER BLADE END)
29A	NO. 8 x ⅝" S.S. P.H. SMS	SECURES HOLLOW BLADE END TO FRAME CAP (2 PER BLADE END)
30	NO. 8 x 3" S.S. F.H. SMS	2 PER MULLION END THROUGH FRAME
31	NO. 6 x 1¾" S.S. F.H. SMS	2 PER FRAME CORNER INTO CORNER KEY
32	NO. 6 x ⅝" S.S. F.H. SMS	1 PER FRAME CORNER INTO FRAME SCREW BOSS
33	¼"x3"MIN STL. BOLT W/WING NUT	1 PER STORM BAR END THROUGH END ANGLES & BAR
34A	1/4-20 RAWL CAULK-IN	SEE ANCHOR SCHEDULE
34B	1/4-20 MALE OR FEMALE PANEL MATE	SEE ANCHOR SCHEDULE
35	¼" STL BOLT OR THREADED ROD W/WING NUT	ANCHOR STORM BAR ENDS TO WALL ANCHORS
36	1/4-20 STEEL BOLT	ANCHOR STORM BAR END CLIPS TO WALL ANCHORS
37	1/4-20 S.S. BOLTS & 6061-T6 RIVNUTS	2 PER BASE CLIP INTO SHUTTER FRAME
-	-	-

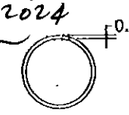

1" O.D. SERRATED TUBE

20 ARM (OUTSIDE)
6063-T6 ALUM.

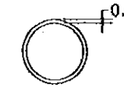

7/8" O.D. SERRATED TUBE

21 ARM (INSIDE)
6063-T6 ALUM.

FRANK L. BENNARDO, P.E.
#PE0046549
10/10/2011

ENGINEERING EXPRESS®
160 SW 12th AVENUE, #105
DEERFIELD BEACH, FL 33442
PH: (954) 354-0660 FAX: (954) 354-0443
WWW.ENGEXP.COM
CERT OF AUTH #4655
A. FRANK L. BENNARDO, P.E., INC. INNOVATION

FLORIDA SHUTTERS, INC.
1055 COMMERCE AVENUE
VERO BEACH, FL 32960
(772) 569 - 2200
"IMPACT" ALUMINUM BAHAMA SHUTTER
MIAMI-DADE NOTICE OF ACCEPTANCE

REMARKS	DRWN	CHKD	DATE
INIT ISSUE	RKB	CL	02/24/09
REV PER BCDO COMMENT	KL	FLB	09/25/09
2010 FBC	KL	FLB	10/10/11

08-FSH-0002
SCALE: - 04
PAGE DESCRIPTION:
-
-
9
7

F:\01 Project Files\Florida Shutters (FSH)\08-FSH-0002 Bahama Shutter\08-FSH-0002 Bahama Shutter (NOA).dwg
10/10/2011 - 5:03pm keithl

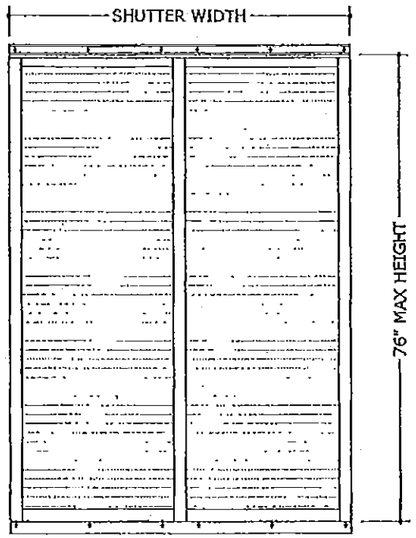

1/9 NO BARS
1/2" = 1'-0" EXTER ELEV
(SINGLE SPAN SHUTTER)

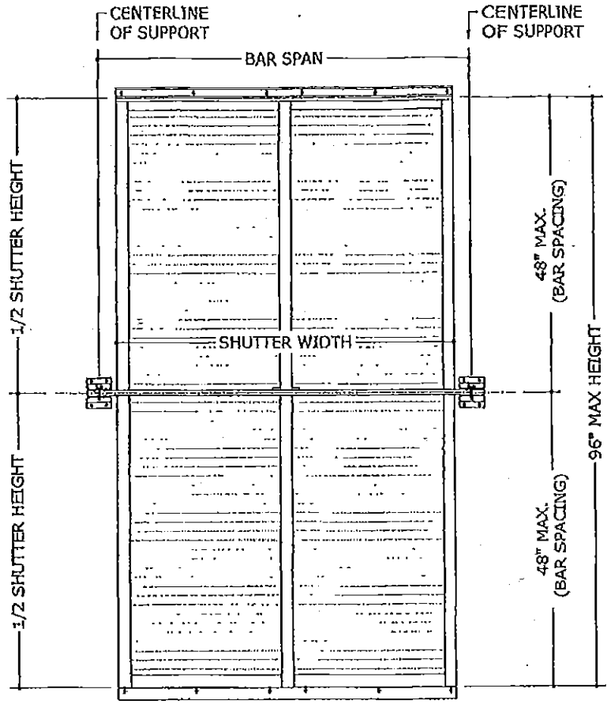

2/9 ONE BAR
1/2" = 1'-0" EXTER ELEV
(TWO SPAN SHUTTER)

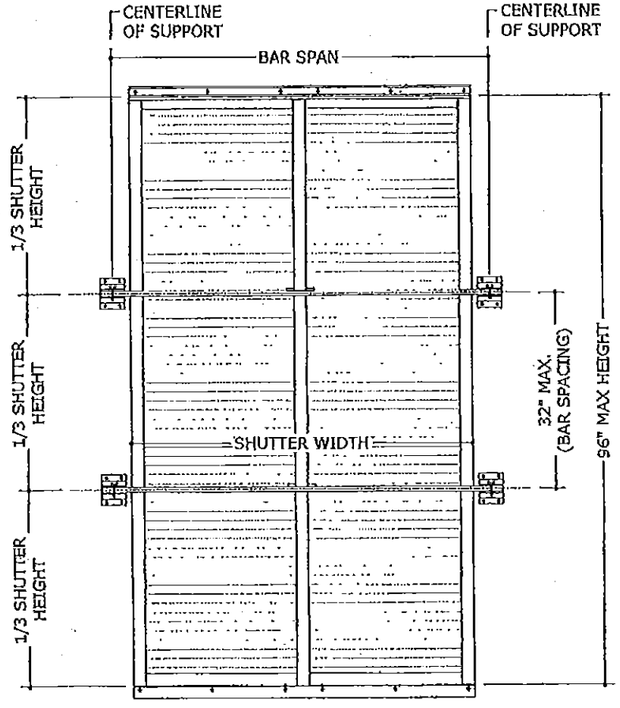

3/9 TWO BARS
1/2" = 1'-0" EXTER ELEV
(THREE SPAN SHUTTER)

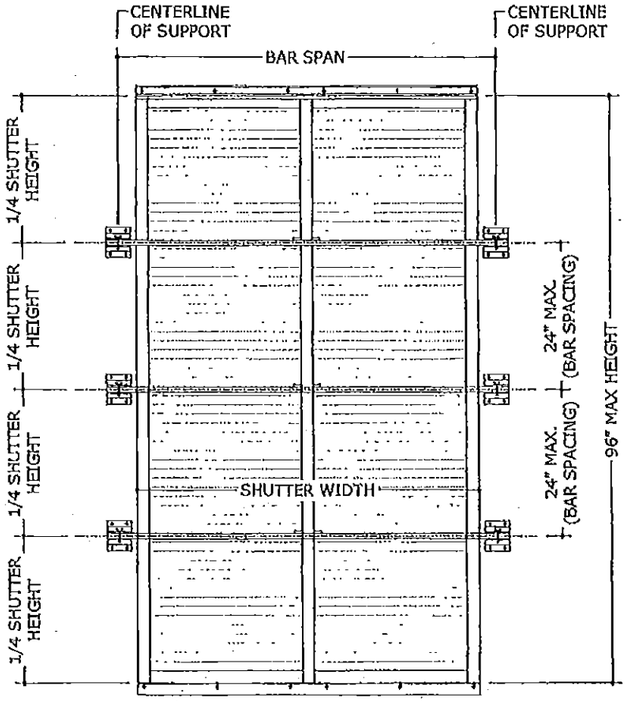

4/9 THREE BARS
1/2" = 1'-0" EXTER ELEV
(FOUR SPAN SHUTTER)

TABLE 1:

ALLOWABLE PRESSURE TABLE FOR SINGLE SPAN SHUTTERS

SHUTTER HEIGHT	PRESSURE (PSF)	
	POS	NEG
60" & LESS	65	80
62"	60.7	72.1
64"	56.8	66
66"	53.3	60.4
68"	50	55.4
70"	45	50.9
72"	40	46.8
74"	36	43
76"	32	40

TABLE 1 NOTES:
1. TABLE 1 SHALL BE USED ONLY FOR SINGLE SPAN SHUTTERS WITHOUT STORM BARS.
2. DESIGN PRESSURES FOR SINGLE SPAN SHUTTERS SHALL NOT EXCEED THE DESIGN PRESSURES INDICATED IN TABLE 1.
3. FOR MULTI-SPAN SHUTTERS WITH STORM BARS, REFERENCE TABLE 2.

PRODUCT RENEWED
as complying with the Florida Building Code
Acceptance No 14-1120.09
Expiration Date 03/08/2024
By [signature]
Miami Dade Product Control

PRODUCT REVISED
as complying with the Florida Building Code
Acceptance No 11-1128.07
Expiration Date 03/08/2014
By [signature]
Miami Dade Product Control

PRODUCT RENEWED
as complying with the Florida Building Code
Acceptance No 13-1203.08
Expiration Date 03/08/2019
By [signature]
Miami Dade Product Control

FRANK L. BENNARDO, P.E.
#PE0046549
10/10/2011

ENGINEERING EXPRESS®
160 SW 12th AVENUE, #106
DEERFIELD BEACH, FL 33442
PH: (954) 354-0660 FAX: (954) 354-0443
WWW.ENGEXP.COM
CERT OF AUTH #6655
A FRANK L. BENNARDO, P.E., INC. INNOVATION

FLORIDA SHUTTERS, INC.
1055 COMMERCE AVENUE
VERO BEACH, FL 32960
(772) 569 - 2200

"IMPACT" ALUMINUM BAHAMA SHUTTER
MIAMI-DADE NOTICE OF ACCEPTANCE

REMARKS	DRWN	CHKD	DATE
INIT ISSUE	RKB	CL	02/24/09
REV PER BCCO COMMENT	KL	FLB	09/29/09
2010 FBC	KL	FLB	10/10/11

08-FSH-0002
SCALE: 04
PAGE DESCRIPTION:

9

8

F:\01 Project Files\Florida Shutters (FSH)\2008\08-FSH-0002 Bahama Shutter\08-FSH-0002_04a Impact Bahama Shutter (NOA).dwg
10/10/2011 - 5:03pm kelsh

TABLE 2: STORM BAR DESIGN SECHDULE

SHUTTER WIDTH	STORM BAR SPACING	ALLOWABLE STORM BAR DESIGN PRESSURE (PSF)			ALLOWABLE ANCHORAGE DESIGN PRESSURE (PSF)			
		STORM BAR 'A' 2"x2"x0.125"	STORM BAR 'B' 2"x3"x0.125"	STORM BAR 'C' 2"x5"x0.125"	CONN. 'A'		CONN. 'B' & 'C'	
					WOOD	BLOCK/ CONCRETE	WOOD	BLOCK/ CONCRETE
36"	UP TO 42"	80	80	80	80	80	80	52
	UP TO 48"	73	80	80	80	80	80	45
42"	UP TO 36"	67	80	80	80	80	80	52
	UP TO 42"	57	80	80	80	80	80	44
	UP TO 48"	50	80	80	80	76	80	39
48"	UP TO 30"	58	80	80	80	80	80	55
	UP TO 36"	48	80	80	80	80	80	45
	UP TO 42"	41	80	80	80	78	80	39
	UP TO 48"	36	80	80	80	68	80	34
54"	UP TO 30"	43	80	80	80	80	80	48
	UP TO 36"	36	80	80	80	80	80	40
	UP TO 42"	31	80	80	80	69	80	34
	UP TO 48"	-	72	80	80	61	80	30
60"	UP TO 24"	41	80	80	80	80	80	55
	UP TO 30"	33	80	80	80	80	80	44
	UP TO 36"	-	73	80	80	73	80	36
	UP TO 42"	-	63	80	80	62	80	31
	UP TO 48"	-	55	80	80	55	80	-
66"	UP TO 24"	32	80	80	00	80	80	50
	UP TO 30"	-	69	80	80	80	80	40
	UP TO 36"	-	57	80	80	66	80	33
	UP TO 42"	-	49	80	80	57	80	-
	UP TO 48"	-	43	80	80	50	74	-
72"	UP TO 24"	-	68	80	80	80	80	46
	UP TO 30"	-	55	80	80	73	80	36
	UP TO 36"	-	45	80	80	61	80	30
	UP TO 42"	-	39	80	80	52	78	-
	UP TO 48"	-	34	80	80	45	68	-
78"	UP TO 24"	-	65	80	80	80	80	42
	UP TO 30"	-	44	80	80	67	80	33
	UP TO 36"	-	37	80	80	56	80	-
	UP TO 42"	-	31	80	80	48	72	-
	UP TO 48"	-	-	80	80	42	63	-
84"	UP TO 24"	-	45	80	80	76	80	39
	UP TO 30"	-	36	80	80	62	80	31
	UP TO 36"	-	30	80	80	52	78	-
	UP TO 42"	-	-	80	80	44	67	-
	UP TO 48"	-	-	80	80	38	58	-
90"	UP TO 24"	-	37	80	80	73	80	36
	UP TO 30"	-	30	80	80	58	80	-
	UP TO 36"	-	-	80	80	48	73	-
	UP TO 42"	-	-	78	80	41	62	-
	UP TO 48"	-	-	67	80	36	54	-

SHUTTER WIDTH	STORM BAR SPACING	ALLOWABLE STORM BAR DESIGN PRESSURE (PSF)			ALLOWABLE ANCHORAGE DESIGN PRESSURE (PSF)			
		STORM BAR 'A' 2"x2"x0.125"	STORM BAR 'B' 2"x3"x0.125"	STORM BAR 'C' 2"x5"x0.125"	CONN. 'A'		CONN. 'B' & 'C'	
					WOOD	BLOCK/ CONCRETE	WOOD	BLOCK/ CONCRETE
96"	UP TO 24"	-	31	80	80	66	80	34
	UP TO 30"	-	-	80	80	55	80	-
	UP TO 36"	-	-	76	80	45	68	-
	UP TO 42"	-	-	64	80	39	58	-
	UP TO 48"	-	-	56	80	34	51	-
102"	UP TO 24"	-	-	80	80	64	80	32
	UP TO 30"	-	-	76	80	51	77	-
	UP TO 36"	-	-	63	80	43	64	-
	UP TO 42"	-	-	54	80	36	55	-
	UP TO 48"	-	-	47	80	32	48	-
108"	UP TO 24"	-	-	80	80	61	80	30
	UP TO 30"	-	-	65	80	48	73	-
	UP TO 36"	-	-	54	80	40	60	-
	UP TO 42"	-	-	46	80	34	52	-
	UP TO 48"	-	-	40	80	30	45	-
112"	UP TO 24"	-	-	74	80	58	80	-
	UP TO 30"	-	-	59	80	47	70	-
	UP TO 36"	-	-	49	80	39	58	-
	UP TO 42"	-	-	42	80	33	50	-
	UP TO 48"	-	-	37	80	-	44	-

TABLE 2 NOTES:

1. TABLE 2 SHALL BE USED ONLY FOR MULTI-SPAN SHUTTERS WITH STORM BARS.
2. DESIGN PRESSURES FOR MULTI-SPAN SHUTTERS SHALL NOT EXCEED THE DESIGN PRESSURES INDICATED IN TABLE 2.
3. FOR SINGLE SPAN SHUTTERS WITH NO STORM BARS, REFERENCE TABLE 1.

PRODUCT RENEWED
as complying with the Florida Building Code
Acceptance No 14-1120.09
Expiration Date 03/08/2024
By
Miami Dade Product Control

PRODUCT REVISED
as complying with the Florida Building Code
Acceptance No 11-1128.07
Expiration Date 03/08/2014
By
Miami Dade Product Control

PRODUCT RENEWED
as complying with the Florida Building Code
Acceptance No 13-1203.08
Expiration Date 03/08/2019
By
Miami Dade Product Control

FRANK L. BENNARDO, P.E.
#PE0046549
10/10/2011
ENGINEERING EXPRESS®
160 SW 12th AVENUE, #106
DEERFIELD BEACH, FL 33442
PH: (954) 354-0660 FAX (954) 354-0443
WWW.ENGEXP.COM
CERT OF AUTH #28855
A FRANK L. BENNARDO, P.E., INC. INNOVATION

FLORIDA SHUTTERS, INC.
1055 COMMERCE AVENUE
VERO BEACH, FL 32960
(772) 569 - 2200

"IMPACT" ALUMINUM BAHAMA SHUTTER
MIAMI-DADE NOTICE OF ACCEPTANCE

REMARKS	DRAWN	CHKD	DATE
INITISSUE	RKB	CL	02/24/08
REVPER BCCO COMMENT	KL	FLB	06/29/09
2010 FBC	KL	FLB	10/10/11

08-FSH-0002
SCALE: -
PAGE DESCRIPTION:
-
-

9

F:\01 Project Files\Florida Shutters (FSH)\2006\08-FSH-0002 Bahama Shutter\08-FSH-0002_04a Impact Bahama Shutter (NOA).dwg
10/10/2011 - 5:02pm keithl