MIAMI-DADE COUNTY
DEPARTMENT OF REGULATORY AND ECONOMIC RESOURCES (RER)
BOARD AND CODE ADMINISTRATION DIVISION

MIAMI-DADE COUNTY
PRODUCT CONTROL SECTION
11805 SW 26 Street, Room 208
Miami, Florida 33175-2474
T (786) 315-2590 F (786) 315-2599
www.miamidade.gov/economy

NOTICE OF ACCEPTANCE (NOA)

Trane US, Inc.
1515 Mercer Road
Lexington, KY 40511

SCOPE:
This NOA is being issued under the applicable rules and regulations governing the use of construction materials. The documentation submitted has been reviewed and accepted by Miami-Dade County RER- Product Control Section to be used in Miami Dade County and other areas where allowed by the Authority Having Jurisdiction (AHJ).

This NOA shall not be valid after the expiration date stated below. The Miami-Dade County Product Control Section (In Miami Dade County) and/or the AHJ (in areas other than Miami Dade County) reserve the right to have this product or material tested for quality assurance purposes. If this product or material fails to perform in the accepted manner, the manufacturer will incur the expense of such testing and the AHJ may immediately revoke, modify, or suspend the use of such product or material within their jurisdiction. RER reserves the right to revoke this acceptance, if it is determined by Miami-Dade County Product Control Section that this product or material fails to meet the requirements of the applicable building code.

This product is approved as described herein, and has been designed to comply with the High Velocity Hurricane Zone of the Florida Building Code.

DESCRIPTION: Trane Performance Climate Changer Air Handler – Size 50 Stacked Unit

APPROVAL DOCUMENT: Drawing No. AIRS0672, titled "Trane Performance Climate Changer Air Handler – Size 50 Stacked Unit", sheets 1 through 47 of 47, prepared by Wolters Engineering, Inc., dated September 06, 2013, signed and sealed by Scott Wolters, P.E., on November 06, 2013, bearing the Miami-Dade County Product Control Revision stamp with the Notice of Acceptance number and the expiration date by the Miami-Dade County Product Control Section.

MISSILE IMPACT RATING: Large and Small Missile Impact Resistant

LABELING: Each unit shall bear a permanent label with the manufacturer's name or logo, city, state and the following statement: "Miami-Dade County Product Control Approved", unless otherwise noted herein.

RENEWAL of this NOA shall be considered after a renewal application has been filed and there has been no change in the applicable building code negatively affecting the performance of this product.

TERMINATION of this NOA will occur after the expiration date or if there has been a revision or change in the materials, use, and/or manufacture of the product or process. Misuse of this NOA as an endorsement of any product, for sales, advertising or any other purposes shall automatically terminate this NOA. Failure to comply with any section of this NOA shall be cause for termination and removal of NOA.

ADVERTISEMENT: The NOA number preceded by the words Miami-Dade County, Florida, and followed by the expiration date may be displayed in advertising literature. If any portion of the NOA is displayed, then it shall be done in its entirety.

INSPECTION: A copy of this entire NOA shall be provided to the user by the manufacturer or its distributors and shall be available for inspection at the job site at the request of the Building Official.

This NOA **revises NOA #12-0629.02** and consists of this page 1, evidence submitted page E-1 as well as approval document mentioned above.
The submitted documentation was reviewed by **Helmy A. Makar, P.E., M.S.**

MIAMI-DADE COUNTY APPROVED

03/26/2015

NOA No. 14-1120.13
Expiration Date: 11/21/2018
Approval Date: 03/26/2015

Trane US, Inc.

NOTICE OF ACCEPTANCE: EVIDENCE SUBMITTED

1. EVIDENCE SUBMITTED UNDER PREVIOUS APPROVAL #12-0629.02

A. DRAWINGS:

1. *Drawing No. AIRS0672, titled "Trane Performance Climate Changer Air Handler - Size 50 Stacked Unit", sheets 1 through 47 of 47, prepared by Wolters Engineering, Inc., dated September 06, 2013, signed & sealed by Scott Wolters, P.E., on 11/06/2013.*

B. TESTS:

1. *Test report on Large Missile Impact Test, Cyclic Wind Pressure Test and Uniform Static Air Pressure Test of Trane Performance Climate Changer Air Handler Size 50 Stacked Unit, prepared by Hurricane Test Laboratory, Inc., Report No. 0254-0607-11, dated 04/09/2012, signed and sealed by Vinu J. Abraham, P.E.*

C. CALCULATIONS:

1. *Panel and fasteners analysis prepared by Wolters Engineering, Inc., dated September 13, 2012, signed and sealed by Scott Wolters, P.E., on September 11, 2013.*

D. QUALITY ASSURANCE

1. *By Miami-Dade County Department of Regulatory and Economic Resources.*

E. MATERIAL CERTIFICATIONS

1. *Tape properties by Butly.*
2. *Rigid Froth-Foam properties.*
3. *Industrial Polyurethane Adhesive/Sealant properties by Sikaflex.*

F. STATEMENTS

1. *FBC, 2010 conformance letter, dated 07/23/12, signed & sealed by Scott Wolters, P.E.*

2. NEW EVIDENCE SUBMITTED

A. DRAWINGS:

1. *None.*

B. TESTS:

1. *None.*

C. CALCULATIONS:

1. *None.*

D. QUALITY ASSURANCE

1. *By Miami-Dade County Department of Regulatory and Economic Resources.*

E. MATERIAL CERTIFICATIONS

1. *None.*

F. STATEMENTS

1. *FBC, 2014 conformance letter, dated 02/10/2015, signed & sealed by Scott Wolters, P.E.*

Helmy A. Makar, P.E., M.S.
Product Control Unit Supervisor
NOA No. 14-1120.13
Expiration Date: 11/21/2018
Approval Date: 03/26/2015

GENERAL NOTES, TRANE PERFORMANCE CLIMATE CHANGER AIR HANDLER - SIZE 50 STACKED UNIT.

1. THIS PRODUCT, FABRICATED AND ANCHORED AS DETAILED IN THIS DRAWING, IS LARGE MISSILE IMPACT RESISTANT AND DOES NOT REQUIRE THE USE OF IMPACT PROTECTIVE DEVICES. ALLOWABLE UNIT WALL DESIGN PRESSURE IS +/- 75 PSF, AND THE ROOF DESIGN PRESSURE IS +/- 56.25 PSF. THIS PRODUCT APPROVAL IS APPLICABLE TO UNIT SIZES 35 THROUGH 50; THE SIZE 50 IS SHOWN IN THIS APPROVAL.
2. THIS PRODUCT HAS BEEN TESTED TO TAS 201-94, TAS 202-94 STRUCTURAL LOADS, AND TAS 203-94 (REF. TEST REPORT HTL-0254-0607-11), AND MEETS THE HIGH VELOCITY HURRICANE ZONE REQUIREMENTS OF THE FLORIDA BUILDING CODE, 2010 EDITION. THIS PRODUCT IS NOT RATED FOR WATER INFILTRATION RESISTANCE AND HAS NOT BEEN TESTED FOR WIND DRIVEN RAIN. THE TESTED PRODUCT REMAINED OPERABLE AFTER IMPACT/CYCLIC TESTS WERE COMPLETED.
3. THIS PRODUCT APPROVAL IS GENERIC IN NATURE AND DOES NOT PROVIDE INFORMATION FOR SPECIFIC PROJECTS WHERE THE CONDITIONS VARY FROM THIS DOCUMENT. THE FLORIDA LICENSED ENGINEER OR ARCHITECT OF RECORD FOR THE PROJECT SHALL BE RESPONSIBLE FOR THE DESIGN, SIZING, AND STRUCTURAL ADEQUACY OF THE PRODUCT FRAMEWORK AS WELL AS CURBING AND ATTACHMENT TO THE ROOF, OR AS ACCEPTED BY THE CORRESPONDING BUILDING DEPARTMENTS.
4. THE STRUCTURAL ADEQUACY OF THE ROOF TO SUPPORT THIS EQUIPMENT IS NOT PART OF THE SCOPE OF THIS PRODUCT APPROVAL AND SHALL BE REVIEWED BY THE CORRESPONDING BUILDING DEPARTMENTS. ANCHORAGE SHOWN HEREIN HAS BEEN ANALYZED FOR SLIDING AND OVERTURNING LOADS FOR THE CONFIGURATION INDICATED, AND SMALLER CONFIGURATIONS ASSUMING THE HEIGHT IS NO MORE THAN TWICE THE WIDTH. OTHER CONFIGURATIONS NOT INDICATED HERE SHALL BE ANALYZED BY THE DESIGN PROFESSIONAL OF RECORD TO PREVENT SLIDING AND OVERTURNING OF THE EQUIPMENT, AND SHALL BE REVIEWED BY THE CORRESPONDING BUILDING DEPARTMENTS. SEE PAGE 39.
5. THIS PRODUCT APPROVAL IS FOR THE STRUCTURAL AND IMPACT/CYCLIC PERFORMANCE OF THE AIR HANDLER, INCLUDING OPTIONAL2 LEVEL SECTION AND PIPE CABINET, ENCLOSURES. THESE ENCLOSURES INCLUDE THE OPTIONAL EXTERNALLY MOUNTED COMPONENTS AS SHOWN IN THE DRAWINGS, FOR EXAMPLE HOODS ATTACHED TO AIR INTAKES AND EXHAUST OPENINGS, WINDOWS/VIEWPORTS, AND DOORS, AS WELL AS MINIHELIC GAUGES, JUNCTION BOXES, UV INTENSITY METERS, DISCONNECT SWITCHES, RACEWAYS, AND GFCI INTERFACES. THIS PRODUCT APPROVAL DOES NOT INCLUDE INTERNALLY MOUNTED COMPONENTS OR ANY ELECTRICAL DEVICES OR CIRCUITRY.
6. THE PRODUCT IS CONSTRUCTED IN BUILD GROUPS. BUILD GROUPS MAY BE ASSEMBLED INTO SHIPPING SECTIONS; ASSEMBLY SHALL BE WITH SPLICE PLATES AS SHOWN HEREIN. BUILD GROUPS OR SHIPPING SECTIONS MAY BE FURTHER ASSEMBLED INTO INSTALLED UNIT; ASSEMBLY SHALL BE WITH THREADED ROD BETWEEN LIFTING LUGS AS SHOWN HEREIN. THE UNITS MAY BE STACKED UP TO TWO HIGH AS SHOWN IN THESE DRAWINGS. IF STACKED, THE UPPER AND LOWER LEVELS SHALL BE THE SAME OVERALL WIDTH AND LENGTH, DIFFERING FOOTPRINTS BETWEEN UPPER AND LOWER LEVEL ARE NOT ALLOWED.
7. ENERGY WHEEL SECTION (ALSO KNOWN AS 2 LEVEL SECTION- 2L SECTION) AND PIPE CABINET (PC) SECTIONS MAY BE ADDED INTO THE ASSEMBLY. IF USED, ASSEMBLY WITH OTHER BUILD UNITS OR SHIPPING SECTIONS SHALL BE WITH THREADED ROD BETWEEN LIFTING LUGS AS SHOWN HEREIN.
8. THE 4/3 ALLOWABLE STRESS INCREASE HAS NOT BEEN USED IN THE ANCHOR ANALYSIS FOR THIS SYSTEM.
9. DISSIMILAR MATERIALS THAT COME INTO CONTACT SHALL BE COATED OR OTHERWISE PROTECTED PER FBC TO PREVENT GALVANIC REACTIONS.
10. ALL HARDWARE & FASTENERS SHALL BE IN ACCORDANCE WITH THESE DRAWINGS & MAY NOT VARY UNLESS SPECIFICALLY MENTIONED ON THE DRAWINGS. SPECIFIED EMBEDMENT TO BASE MATERIAL SHALL BE BEYOND ALL FINISHES.
11. ACRONYMS USED IN THIS APPROVAL ARE AS FOLLOWS: EOU IS END OF UNIT, DOAF IS DIRECTION OF AIR FLOW, SS IS SHIPPING SPLIT, PC IS PIPE CABINET, 2L IS THE 2 LEVEL SECTION.
12. ALL UNITS OF MEASURE ARE IN INCHES UNLESS OTHERWISE SPECIFIED
13. 2" MAX. DIAMETER CIRCULAR HOLES MAY BE FIELD DRILLED THROUGH THE EXTERIOR WALLS FOR INSTALLATION OF CONDUIT OR COMPONENTS. HOLES SHALL BE PROTECTED FROM WIND BY CONNECTED EQUIPMENT OR CONDUIT, BY OTHERS, AND PROPER SEALING TO PREVENT AIR EXCHANGE SHALL BE BY OTHERS. HOLES SHALL BE 3" MAX. FROM ANY PANEL EDGE, SEE DETAIL B, SHEET 16. MAX. 4 FIELD-DRILLED HOLES PER PANEL, 12" ON CENTER MINIMUM.

Approved as complying with the Florida Building Code
Date 11/21/2013
NOA# 12-0629.02
Miami Dade Product Control
By

PRODUCT REVISED
as complying with the Florida Building Code
Acceptance No 14-1120.13
Expiration Date 11/21/2018
By
Miami Dade Product Control

SCOTT WOLTERS
FL PE# 62354
WOLTERS ENGINEERING, INC.
(COA# 27194)
5358 SW 32ND TERRACE
FT. LAUDERDALE, FL 33312

NOV 06 2013

DRAWING #	DESC.		REV. HISTORY	BY:	REV.
AIRS0672	TRANE PERFORMANCE CLIMATE CHANGER AIR HANDLER - SIZE 50 STACKED UNIT	TRANE US Inc.	---	K.YUVARAJA	A
SHEET 1 OF 47 / SECTION			MOCK UPDWG SHEET REF: ---	SCALE: NTS	DATE 06-SEP-2013

GENERIC FOAM PANEL CROSS SECTION DETAILS

COMPONENTS	DETAILS ON PAGE
BACK/FRONT HOOD	24 - 26
ENERGY WHEEL SECTION (2L SECTION)	32-38
COMPONENTS ON THE DOOR	10
RACEWAY BOX	16

CROSS SECTION	REFERENCE PAGE
A-A	6
B-B	5
C-C	7

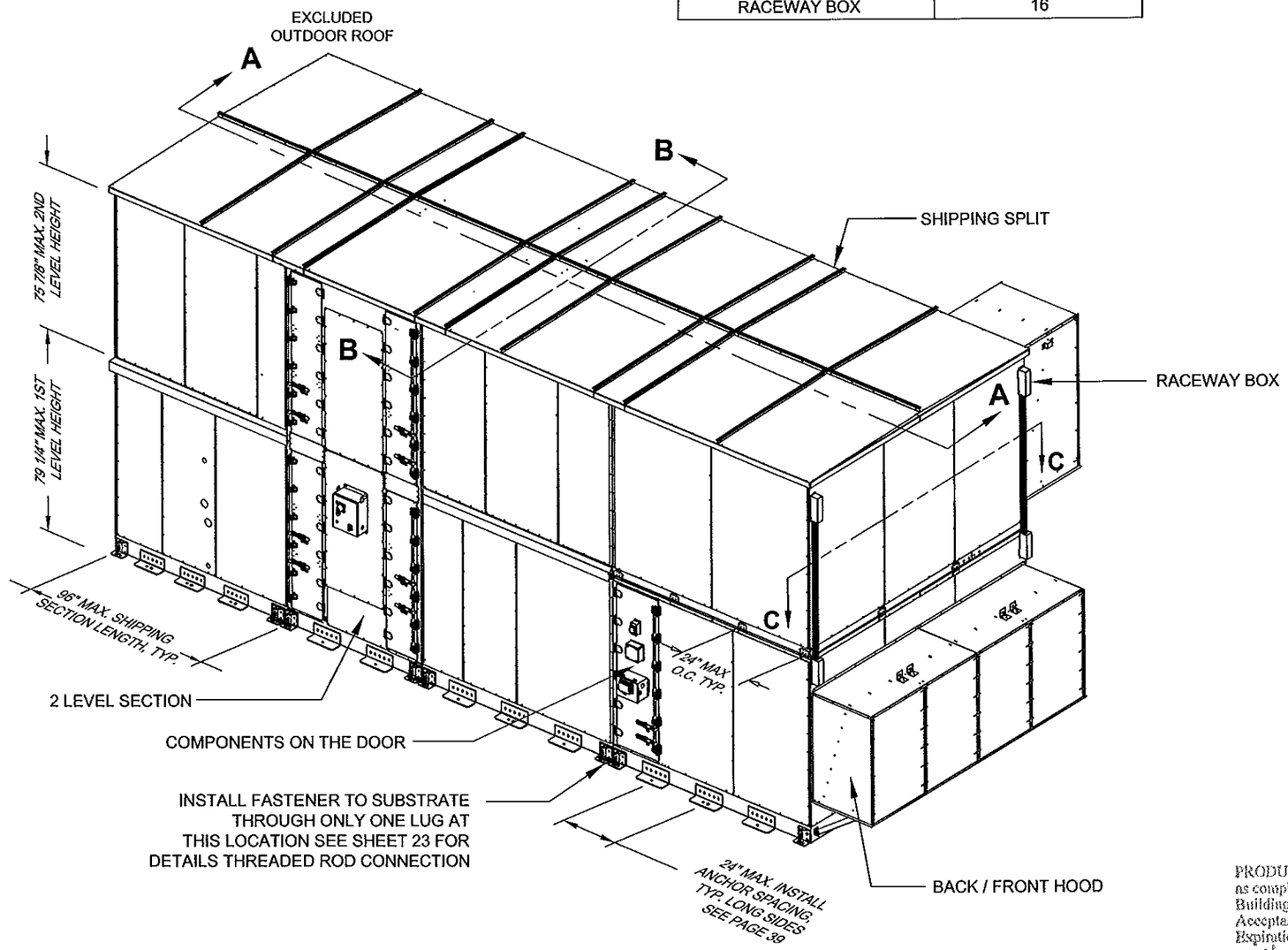

THE LIFTING LUG AND ANCHOR SIDE OF THE UNIT IS REFERED TO AS THE UNIT SIDES.

Approved as complying with the Florida Building Code
Date 11/21/2013
NOA# 12-0629.02
Miami Dade Product Control
By

PRODUCT REVISED
as complying with the Florida Building Code
Acceptance No 14-1120.13
Expiration Date 11/21/2018
By
Miami Dade Product Control

SCOTT WOLTERS
FL PE# 62354
WOLTERS ENGINEERING, INC.
(COA# 27194)
5358 SW 32ND TERRACE
FT. LAUDERDALE, FL 33312
NOV 06 2013

DRAWING #	DESC.		REV. HISTORY	BY:	REV.
AIRS0672	TRANE PERFORMANCE CLIMATE CHANGER AIR HANDLER - SIZE 50 STACKED UNIT	TRANE US Inc.	---	K.YUVARAJA	A
SHEET 2 OF 47 / SECTION			MOCK UPDWG SHEET REF: ---	SCALE: NTS	DATE 06-SEP-2013

GENERIC FOAM PANEL CROSS SECTION DETAILS

COMPONENTS	DETAILS ON PAGE
PIPE CABINET	27-30
SIDE HOOD	24-26
GAS HEAT INLET HOOD	24-26
GAS HEAT FLUE DUCT	31
JUNCTION BOX	16

CROSS SECTION	REFERENCE PAGE
D-D	8
E-E	8

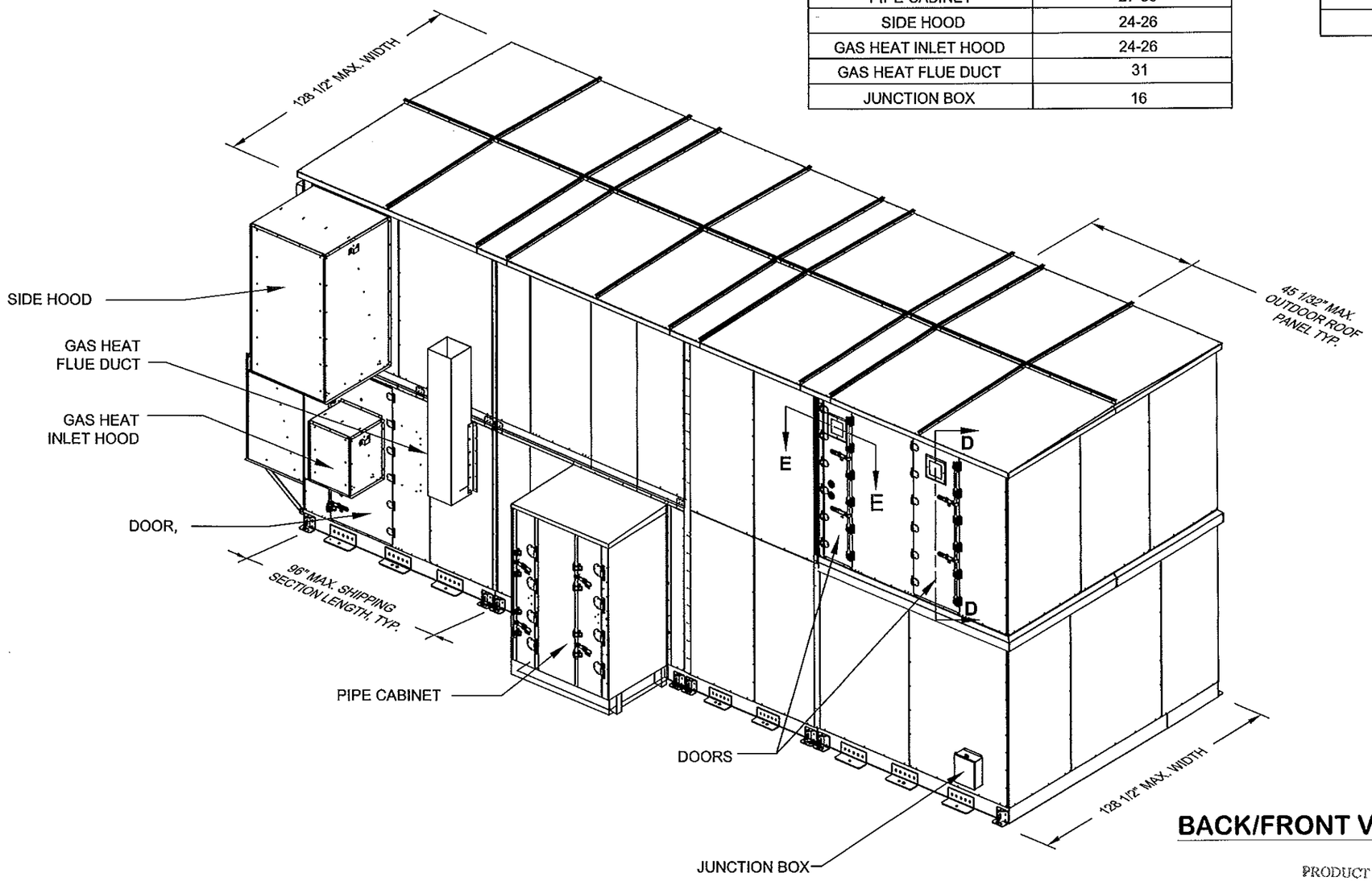

BACK/FRONT VIEW

Approved as complying with the Florida Building Code
Date 11/21/2013
NOA# 12-0629.02
Miami Dade Product Control
By

PRODUCT REVISED
as complying with the Florida Building Code
Acceptance No 14-1120.13
Expiration Date 11/21/2018
By
Miami Dade Product Control

NOTE:
1. THE LIFTING LUGS ARE ATTACHED TO THE SIDES OF THE UNIT.

SCOTT WOLTERS
FL PE# 62354
WOLTERS ENGINEERING, INC.
(COA# 27194)
5358 SW 32ND TERRACE
FT. LAUDERDALE, FL 33312

NOV 06 2013

DRAWING #	DESC.		REV. HISTORY	BY:	REV.
AIRS0672	TRANE PERFORMANCE CLIMATE CHANGER AIR HANDLER - SIZE 50 STACKED UNIT	TRANE US Inc.	---	K.YUVARAJA	A
SHEET 3 OF 47 / SECTION			MOCK UPDWG SHEET REF: ---	SCALE: NTS	DATE 06-SEP-2013

BILL OF MATERIALS		
1	10-16 x .75" SELF-DRILLING SCREW	GRADE 5 STEEL
2	.125" THICK x 2" WIDE TAPE	BUTYL
3	.188 (.06" COMPRESSED) x .625" GASKET	PVC/NBR
4	10-16 x 1.75" SELF-DRILLING SCREW	GRADE 5 STEEL
5	DECORATIVE COVER	GALV. STEEL
6		
7	.120" THICK x 1" WIDE TAPE	BUTYL
8	.375" THICK x .750" WIDE GASKET	PORON
9	HAT CHANNEL	GALV. STEEL
10	DOOR HINGE	GALV. STEEL
11	DOOR CAM BRACKET	GALV. STEEL
12	STRIKER PLATE	GALV. STEEL
13	.06" THICK x .5" WIDE TAPE	BUTYL
14	WINDOW 3/16" PLEXIGLASS 8 3/4" x 8 3/4"	PLEXIGLASS
15		
16	STRUCT. ADHESIVE SIKAFLEX 552	POLYMER
17	1/4"-14 x 3/4" SELF-DRILLING SCREW	GRADE 5 STEEL
18	UV DISCONNECT SWITCH	VARIES
19	INTENSITY MEASUREMENT METER	VARIES
20	GFCI JUNCTION BOX	GALV. STEEL
21	CONDUIT 1" RUNNING THREAD	GALV. STEEL
22	1" CONDUIT NUT	GALV. STEEL
23	1" CONDUIT BUSHING	GALV. STEEL
24	CONDUIT 1/2" RUNNING THREAD	GALV. STEEL
25	1/2" CONDUIT NUT	GALV. STEEL
26	1/2" CONDUIT BUSHING	GALV. STEEL
27	MINIHELIC GAUGE	VARIES
28	4-40 x 1 1/4" PHILLIPS PAN HEAD SCREW	GRADE 5 STEEL
29	ELBOW	GALV. STEEL
30	.06" THICK x 0.38" WIDE TAPE	BUTYL
31	FOAM RETAINER	GALV. STEEL
32	GANGED DOOR HANDLE ASSEMBLY	GALV. STEEL
33	DOOR VIEWER	VARIES
34		
35	PADLOCK BRACKET	GALV. STEEL
36	1/4-20 x 1/4" SET SCREW	GRADE 5 STEEL
37	10-16 x 1/2" SELF-DRILLING SCREW	GRADE 5 STEEL
38	.5" x 2.5" x 2.5" SPECIALTY GASKET	PVB/NBR
39	5/16"-18 x 7/8" SHEET METAL SCREW	GRADE 5 STEEL
40	SECOND LEVEL BASE RAIL	GALV. STEEL
41	STACKED UNIT BRACKET	GALV. STEEL
42	1" (.25" COMPR.) x 4" STACKED UNIT GASKET	PVC/NBR
43	STACKED UNIT SKIRT	GALV. STEEL
44	FIRST LEVEL BASE RAIL	GALV. STEEL
45		
46	FOAM COVER	GALV. STEEL
47	FOAM COVER CORNER	GALV. STEEL
48	MULLION	GALV. STEEL
49	JUNCTION BOX	GALV. STEEL
50	SEALANT, SIKAFLEX 221 CAULK	POLYMER
51	RACEWAY BOX	GALV. STEEL
52	DISCONNECT SWITCH ASSEMBLY	VARIES
53	DISCONNECT SWITCH BLOCKOFF	GALV. STEEL
54	.0325" THICK x 1.88" x 15.88" GASKET	POLYOLEFIN
55	.0325" THICK x 3" x 17" GASKET	POLYOLEFIN
56	DISCONNECT HANDLE KIT (NON STRUCTURAL)	VARIES
57	THREADED ROD 1/2"-13 x 10.5"	GALV. STEEL
58	NUT 1/2"-13 HEX MACHINE	GALV. STEEL
59	WASHER .563" ID x 1.375" OD	GALV. STEEL
60	SCREW 1/2"-13 x 1.2 HEX CAP HEAD	GALV. STEEL
61	LIFTING LUG (1ST LEVEL)	GALV. STEEL
62	0.06" THICK LUG GASKET	PVC/NBR
63	BASE RAIL SPLICE PLATE	GALV. STEEL
64		
65	BOLT 5/16"-18 x 6" HEX MACHINE	GALV. STEEL
66	WASHER .375" ID x .875 OD	GALV. STEEL
67	NUT 5/16"-18 HEX FLANGE (HW)	GALV. STEEL
68	LIFTING LUG (2ND LEVEL)	GALV. STEEL
69	ROOF KEEL	GALV. STEEL
70	STRUCT. ADHESIVE SIKAFLEX 3131S	POLYMER
71	ROOF BACKING PLATE	GALV. STEEL
72	.188" (.06" COMPRESSED) x 1.25" GASKET	PVC/NBR
73	DOOR FOOTER	GALV. STEEL
74	SUPPORT MULLION ASSEMBLY	GALV. STEEL
75	BASE SUPPORT CHANNEL / PC BASE L ANGLE	GALV. STEEL
76	DRIP LIP	GALV. STEEL
77	PC SHIPPING BRACKET	GALV. STEEL
78	3/8"-16 x 1 1/4" HEX CAP SCREW	GRADE 5 STEEL
79	3/8"-16 HEX NUT	GRADE 5 STEEL
80	PC BASE RAIL	GALV. STEEL
81	CHAIN GUIDE/GUARD	GALV. STEEL
82	3/8"-16 x 3" BOLT	GRADE 5 STEEL
83	.03" THICK x 2" WIDE ALUMINUM CLAD TAPE	VARIES
84	UNIT WELD BRACKET	GALV. STEEL
85	INTERNAL WALL SPLICE PLATE	GALV. STEEL
86	PC ROOF ANGLE	GALV. STEEL
87	EXTERNAL WALL SPLICE PLATE	GALV. STEEL
88	1/2"-13 x 1.2" HEX CAP BOLT	GRADE 5
89		
90	CROSS BEAM	GALV. STEEL
91	SHIPPING SPLIT SUPPORT ANGLE PTAF	GALV. STEEL
92	SHIPPING SPLIT VERTICAL CHANNEL	GALV. STEEL
93	SLIP FIT CHANNEL	GALV. STEEL
94	VERTICAL CHANNEL	GALV. STEEL
95	TRANSITION HAT CHANNEL	GALV. STEEL
96	TOP L ANGLE / SEPTUM L ANGLE	GALV. STEEL
97	VERTICAL CHANNEL BRACKET	GALV. STEEL
98	.38" THICK x .35" WIDE ROLL	BUTYL
99	SEAM CAP	GALV. STEEL
100	.38" THICK x 2" WIDE ROLL	BUTYL
101	SEAM CAP	GALV. STEEL
102	ROOF STRIP	GALV. STEEL
103	OVERHANG	GALV. STEEL
104	A-FRAME HORIZONTAL	GALV. STEEL
105	A-FRAME VERTICAL	GALV. STEEL
106	HOOD LIFTING LUG ANGLE	GALV. STEEL
107	HOOD LIFTING LUG	GALV. STEEL
108	HOOD SUPPORT	GALV. STEEL
109	HOOD BRACKET	GALV. STEEL
110	HOOD L-ANGLE	GALV. STEEL
111	HOOD SUPPORT TOP CHANNEL	GALV. STEEL
112		GALV. STEEL
113	WALL ANCHOR	GALV. STEEL
114	DOUBLE SIDED TAPE 1/16 (COMPR.) x 3/4 x 216	PVC/NBR
115	PC ROOF KEEL	ALUMINUM 6063-T6
116	KEEPER/DOOR CAM	ZAMAK#3
117	DOOR CAM BRACKET	STEEL 0.060
118	CROSS BEAM BRACKET	GALV. STEEL
119	EOU WALL SUPPORT CHANNEL	GALV. STEEL
120	FLUE DUCT L ANGLE	GALV. STEEL
121	SHIP SPLIT SPLICE PLATE	GALV. STEEL
122	ROOF BACKING PLATE	GALV. STEEL
123	NEW DOOR HEADER - NEW STYLE	GALV. STEEL
124	FLAT BACKING PLATE	GALV. STEEL
125	BOTTOM SMALL ANGLE	GALV. STEEL
126	BOTTOM CAP	STAINLESS STEEL
127	FLUE DUCT	STAINLESS STEEL
128	SUPPORT GUSSET	GALV. STEEL
129	SUPPORT GUSSET BRACKET	GALV. STEEL
130	0.125 X 5/16" RIVETS	GALV. STEEL
131	CASSETTE TRACK VERTICAL	GALV. STEEL
132	BOLT; 1/2-13 X 1 1/4 CARRIAGE	GRADE 5
133	DOOR HEADER - OLDER STYLE	GALV. STEEL
134	CORNER SEAM CAP	GALV. STEEL
135	UV VIEW PORT	GALV. STEEL
136	DOAF ROOF SUPPORT CHANNEL	GALV. STEEL
137	HAT CHANNEL BRACKET	GALV. STEEL
138	COLUMN SPACER	GALV. STEEL
139	TRACK SUPPORT DOAF	GALV. STEEL
140	HORIZONTAL SUPPORT CHANNEL	GALV. STEEL
141	CASSETTE TRACK	GALV. STEEL
142	TOP CASSETTE TRACK	GALV. STEEL
143	CASSETTE/SEPTUM L ANGLE	GALV. STEEL
144	PC LIFITING LUG	GALV. STEEL
145	DOAF BASE SUPPORT CHANNEL	GALV. STEEL
146		GALV. STEEL
147	CORNER BLOCK SECOND LEVEL	GALV. STEEL
148	CORNER BLOCK FIRST LEVEL	GALV. STEEL
149	DOOR TUBE	STEEL

NOTE: PVC/NBR IN BOM TO THE LEFT INDICATES POLYVINYL CHLORIDE / ACRYLONITRILE BUTADIENE RUBBER, SINGLE-SIDED EXCEPT ITEM 114.

Approved as complying with the Florida Building Code
Date 11/21/2013
NOA# 12-0629.02
Miami Dade Product Control
By

PRODUCT REVISED
as complying with the Florida Building Code
Acceptance No 14-1120.13
Expiration Date 11/21/2018
By
Miami Dade Product Control

SCOTT WOLTERS
FL PE# 62354
WOLTERS ENGINEERING, INC.
(COA# 27194)
5358 SW 32ND TERRACE
FT. LAUDERDALE, FL 33312
NOV 0 8 2013

DRAWING #	DESC.		REV. HISTORY	BY:	REV.
AIRS0672	TRANE PERFORMANCE CLIMATE CHANGER AIR HANDLER - SIZE 50 STACKED UNIT	TRANE US Inc.	---	K.YUVARAJA	A
SHEET 4 OF 47 / SECTION			MOCK UPDWG SHEET REF: ---	SCALE: NTS	DATE 06-SEP-2013

TYPICAL STACKED UNIT FOAMED PANEL JOINTS AND CROSS SECTIONS
(SUPPORT STRUCTURE IS NOT SHOWN FOR CLARITY.)

(REFER TO PAGES 11-22 FOR SUPPORT DETAILS)

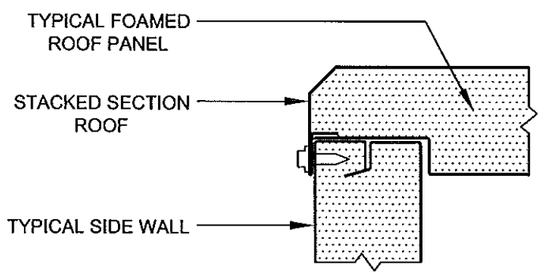

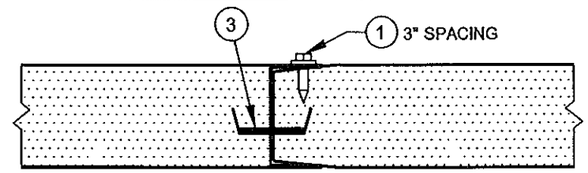

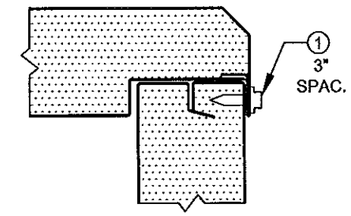

STACKED SECTION

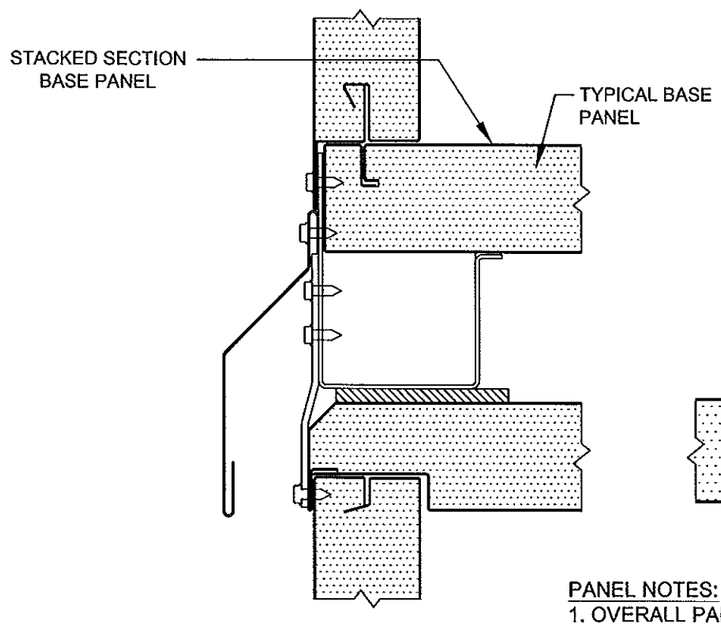

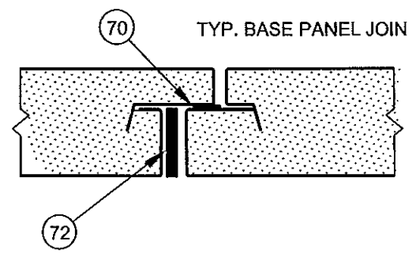

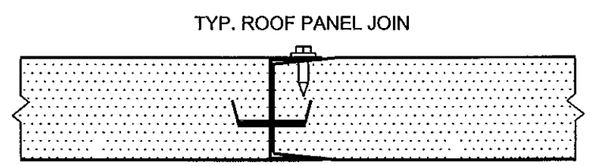

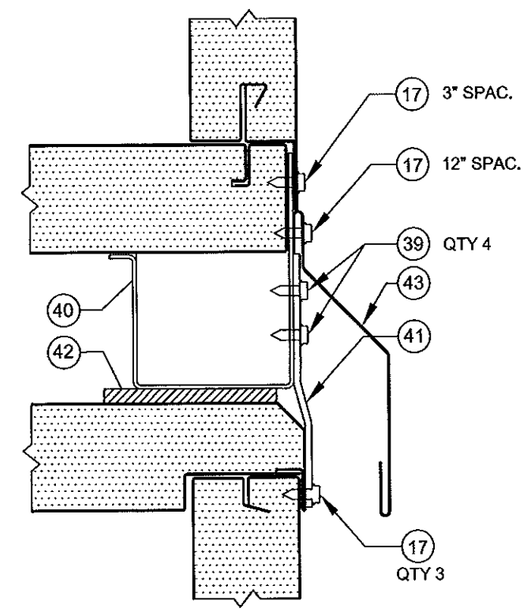

PANEL NOTES:
1. OVERALL PANEL THICKNESS IS 2".
2. CORE MATERIAL IS RIGID FROTH-FOAM INSULATION.
3. INNER AND OUTER CASING PANEL SKINS ARE 0.028" GALVANIZED STEEL.
4. GASKET ITEM 3 IS PLACED AS A THERMAL BREAK BETWEEN ALL INNER AND OUTER CASING PANELS.

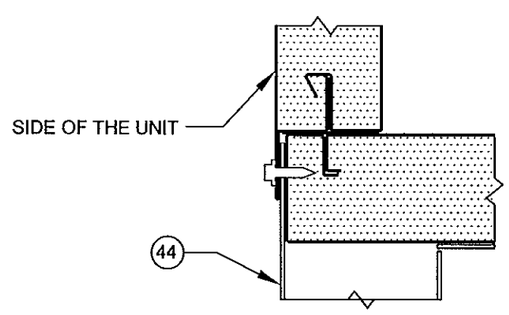

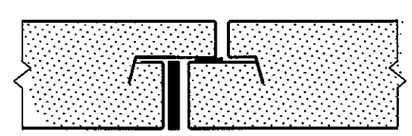

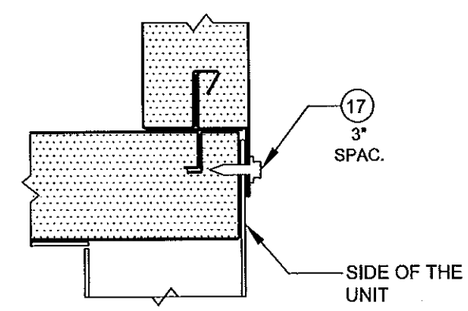

CROSS SECTION B-B

PRODUCT REVISED
as complying with the Florida Building Code
Acceptance No 14-1120.13
Expiration Date 11/21/2018
By
Miami Dade Product Control

Approved as complying with the Florida Building Code
Date 11/21/2013
NOA# 12-0629.02
Miami Dade Product Control
By

SCOTT WOLTERS
FL PE# 62354
WOLTERS ENGINEERING, INC.
(COA# 27194)
5358 SW 32ND TERRACE
FT. LAUDERDALE, FL 33312
NOV 06 2013

DRAWING #	DESC.		REV. HISTORY	BY:	REV.
AIRS0672	TRANE PERFORMANCE CLIMATE CHANGER AIR HANDLER - SIZE 50 STACKED UNIT	TRANE US Inc.	---	K.YUVARAJA	A
SHEET 5 OF 47 / SECTION			MOCK UPDWG SHEET REF: 25, 26, 29, 35, 36 OF 63	SCALE: NTS	DATE 06-SEP-2013

TYPICAL STACKED UNIT FOAMED PANEL JOINTS AND CROSS SECTIONS
(SUPPORT STRUCTURE IS NOT SHOWN FOR CLARITY)

(REFER TO PAGES 11-22 FOR SUPPORT DETAILS)

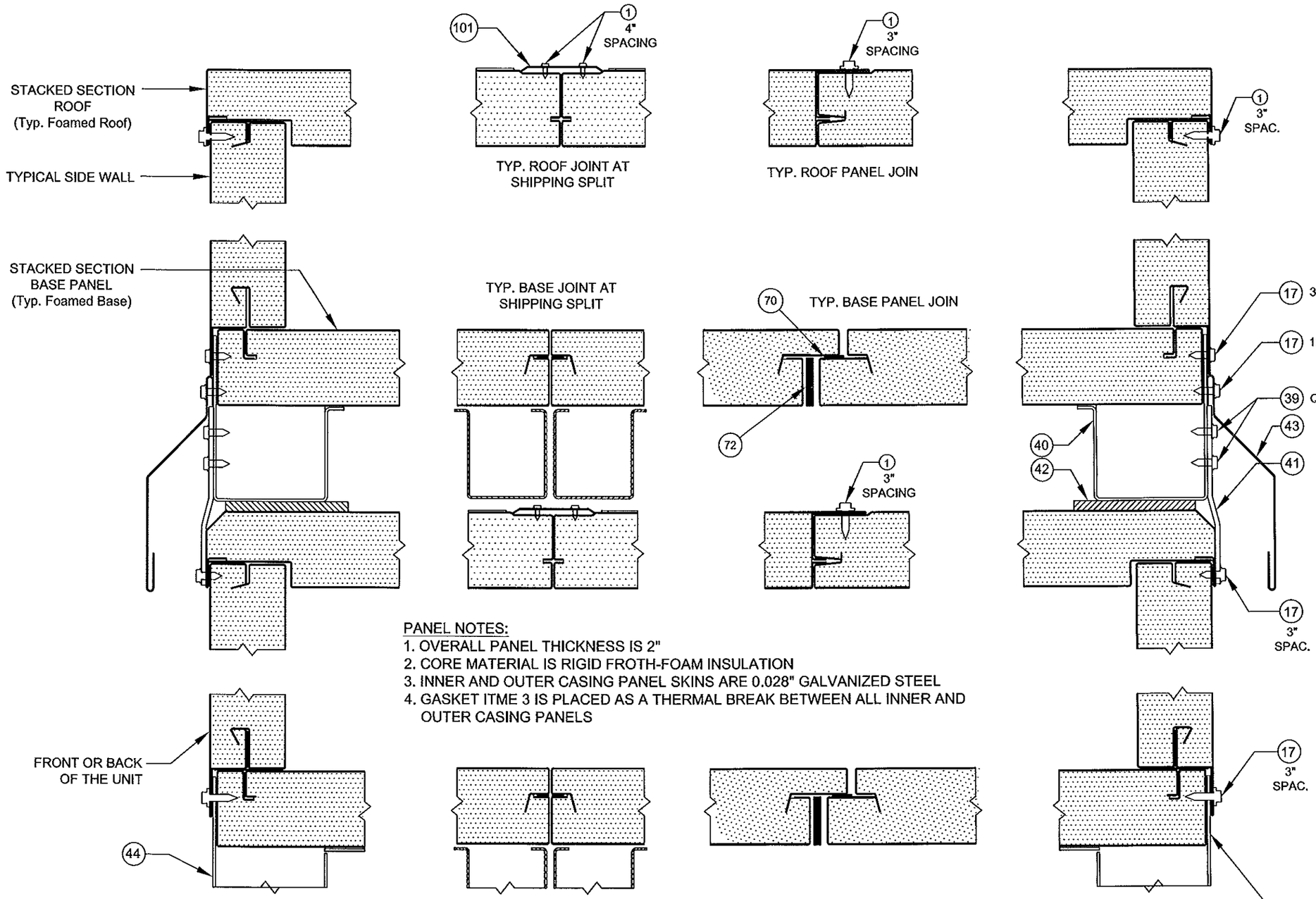

PANEL NOTES:
1. OVERALL PANEL THICKNESS IS 2"
2. CORE MATERIAL IS RIGID FROTH-FOAM INSULATION
3. INNER AND OUTER CASING PANEL SKINS ARE 0.028" GALVANIZED STEEL
4. GASKET ITME 3 IS PLACED AS A THERMAL BREAK BETWEEN ALL INNER AND OUTER CASING PANELS

CROSS SECTION A-A

PRODUCT REVISED
as complying with the Florida Building Code
Acceptance No 14-1120.13
Expiration Date 11/21/2018
By
Miami Dade Product Control

Approved as complying with the Florida Building Code
Date 11/21/2013
NOA# 12-0629.02
Miami Dade Product Control
By

SCOTT WOLTERS
FL PE# 62354
WOLTERS ENGINEERING, INC.
(COA# 27194)
5358 SW 32ND TERRACE
FT. LAUDERDALE, FL 33312
NOV 06 2013

DRAWING #	DESC.		REV. HISTORY	BY:	REV.
AIRS0672	TRANE PERFORMANCE CLIMATE CHANGER AIR HANDLER - SIZE 50 STACKED UNIT	TRANE US Inc.	---	K.YUVARAJA	A
SHEET 6 OF 47 / SECTION			MOCK UPDWG SHEET REF: 25, 26, 29, 35, 36 OF 63	SCALE: NTS	DATE 06-SEP-2013

TYPICAL UNIT CROSS SECTIONS OF FOAMED PANEL AND UNIT SPLIT JOINTS
(SUPPORT STRUCTURE IS NOT SHOWN FOR CLARITY)

(REFER TO PAGES 11-22 FOR SUPPORT DETAILS)

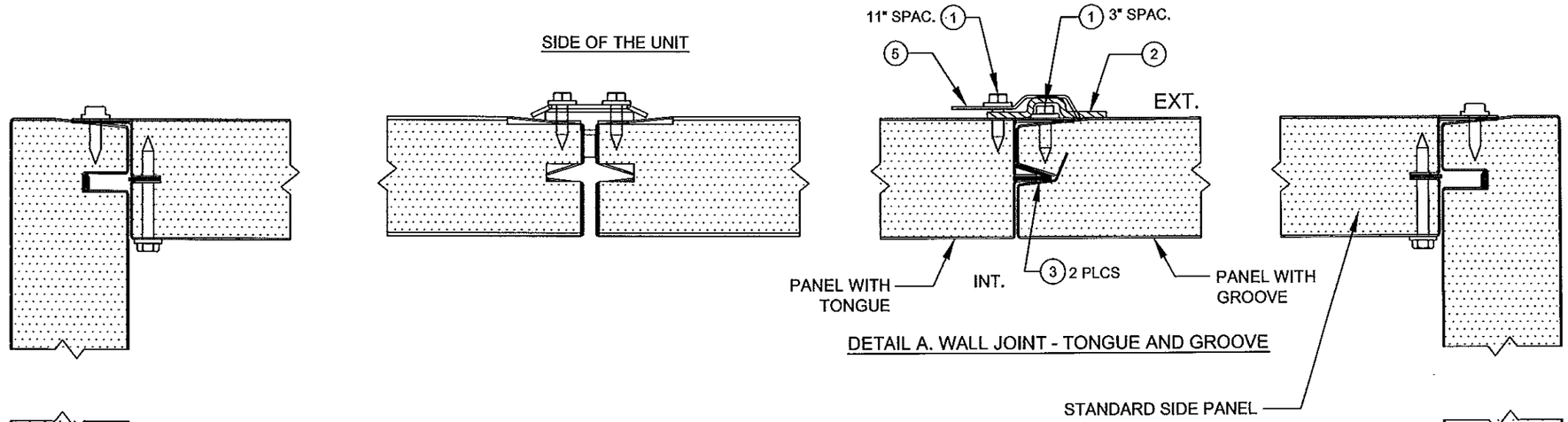

DETAIL A. WALL JOINT - TONGUE AND GROOVE

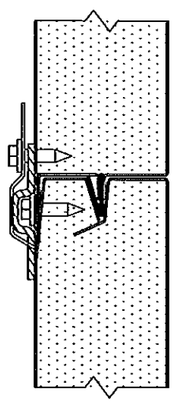

TYPICAL WALL JOINT
TONGUE AND GROOVE
SEE DETAIL A

NOTES:
1. DOOR CROSS SECTION SHOWN ON PAGE 8.

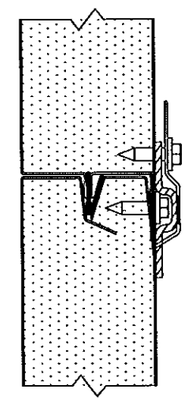

FRONT OR BACK
OF THE UNIT

CROSS SECTION C-C

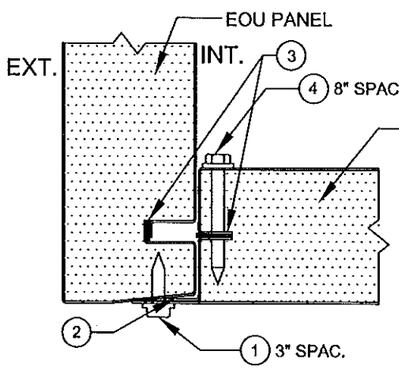

DETAIL C. EOU PANEL
TO REMOVABLE PANEL

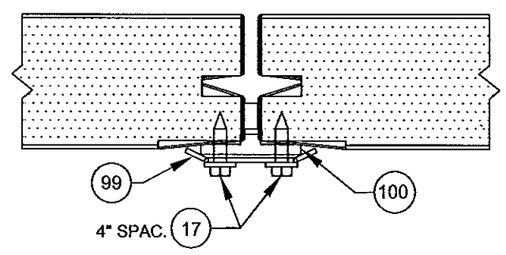

DETAIL D. TYPICAL SHIPPING SPLIT
WALL JOINT WITH SEAM CAP

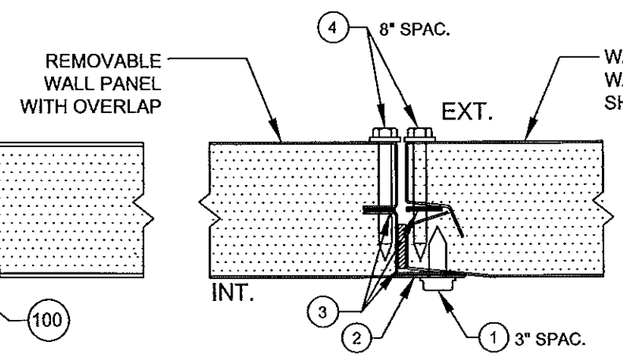

DETAIL B. REMOVABLE PANEL JOINT

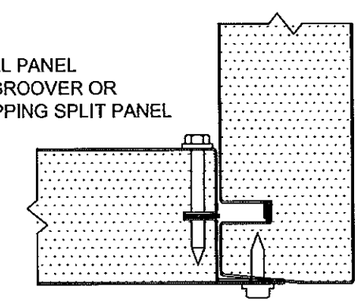

SIDE OF THE UNIT

PRODUCT REVISED
as complying with the Florida
Building Code
Acceptance No 14-1120.13
Expiration Date 11/21/2018
By
Miami Dade Product Control

Approved as complying with the
Florida Building Code
Date 11/21/2013
NOA# 12-0629.02
Miami Dade Product Control
By

SCOTT WOLTERS
FL PE# 62354
WOLTERS ENGINEERING, INC.
(COA# 27194)
5358 SW 32ND TERRACE
FT. LAUDERDALE, FL 33312
NOV 06 2013

DRAWING #	DESC.		REV. HISTORY	BY:	REV.
AIRS0672	TRANE PERFORMANCE CLIMATE CHANGER AIR HANDLER - SIZE 50 STACKED UNIT	TRANE US Inc.	---	K.YUVARAJA	A
SHEET 7 OF 47 / SECTION			MOCK UPDWG SHEET REF: 7, 13, 20, 34 OF 63	SCALE: NTS	DATE 06-SEP-2013

DOOR CROSS SECTION E-E

SEE PANEL NOTES SHEET 5

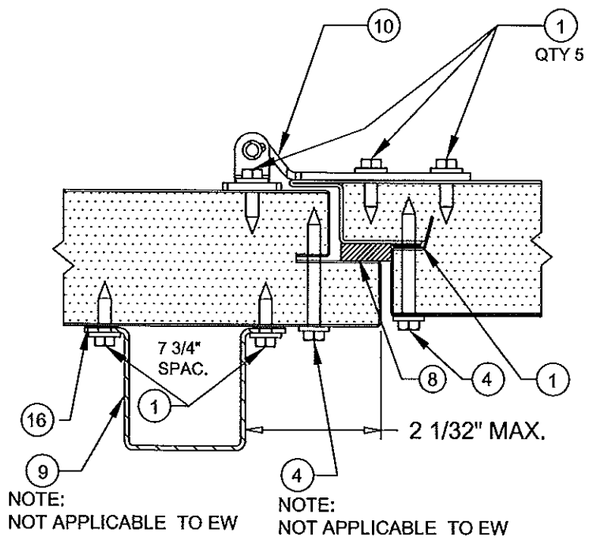

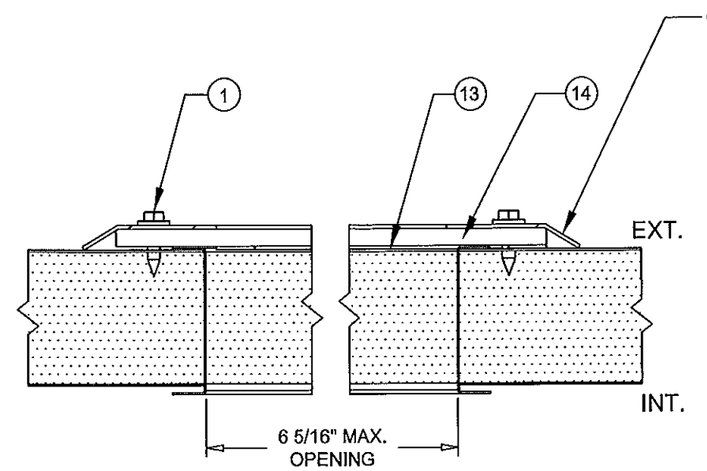

DETAIL A. DOOR HORIZONTAL CROSS-SECTION

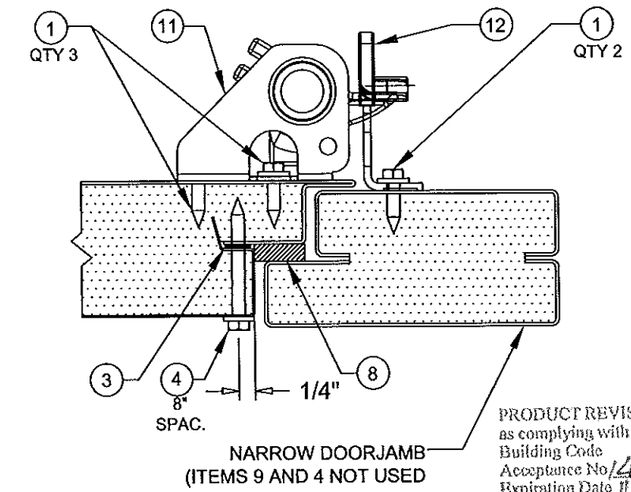

PRODUCT REVISED
as complying with the Florida
Building Code
Acceptance No 14-1120.13
Expiration Date 11/21/2018
By
Miami Dade Product Control

NOTE:
1. THIS DETAILS SHALL BE APPLICABLE TO ALL DOORS IN UNIT, PIPE CABINET, AND ENERGY WHEEL SECTION (2 LEVEL SECTION).

DOOR CROSS SECTION D-D

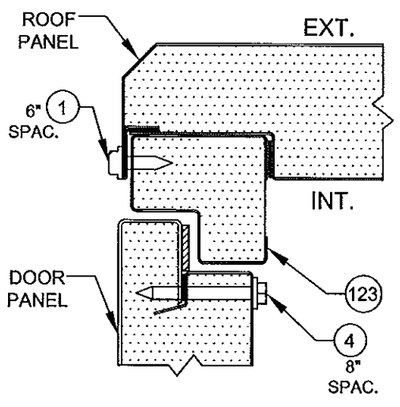

DETAIL B1. DOOR TO ROOF (TOP)
NEW-SYLE HEADER

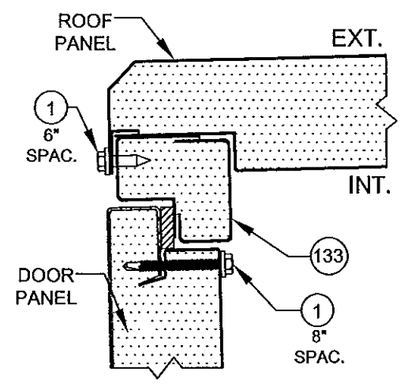

DETAIL B2. DOOR TO ROOF (TOP)
OLD-STYLE HEADER

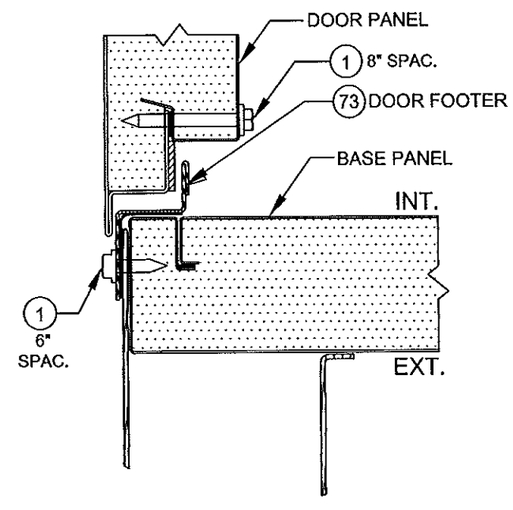

DETAIL C. DOOR TO BASE (BOTTOM)

NOTE:
1. ONLY SHOWING TOP AND BOTTOM OF THE CROSS SECTION.

Approved as complying with the
Florida Building Code
Date 11/21/2013
NOA# 12-0629.02
Miami Dade Product Control
By

SCOTT WOLTERS
FL PE# 62354
WOLTERS ENGINEERING, INC.
(COA# 27194)
5358 SW 32ND TERRACE
FT. LAUDERDALE, FL 33312
NOV 06 2013

DRAWING #	DESC.		REV. HISTORY	BY:	REV.
AIRS0672	TRANE PERFORMANCE CLIMATE CHANGER AIR HANDLER - SIZE 50 STACKED UNIT	TRANE US Inc.	---	K.YUVARAJA	A
SHEET 8 OF 47 / SECTION			MOCK UPDWG SHEET REF: 7, 14, 15, 39 OF 63 AND 20 OF 35	SCALE: NTS	DATE 06-SEP-2013

DOOR HARDWARE LAYOUT

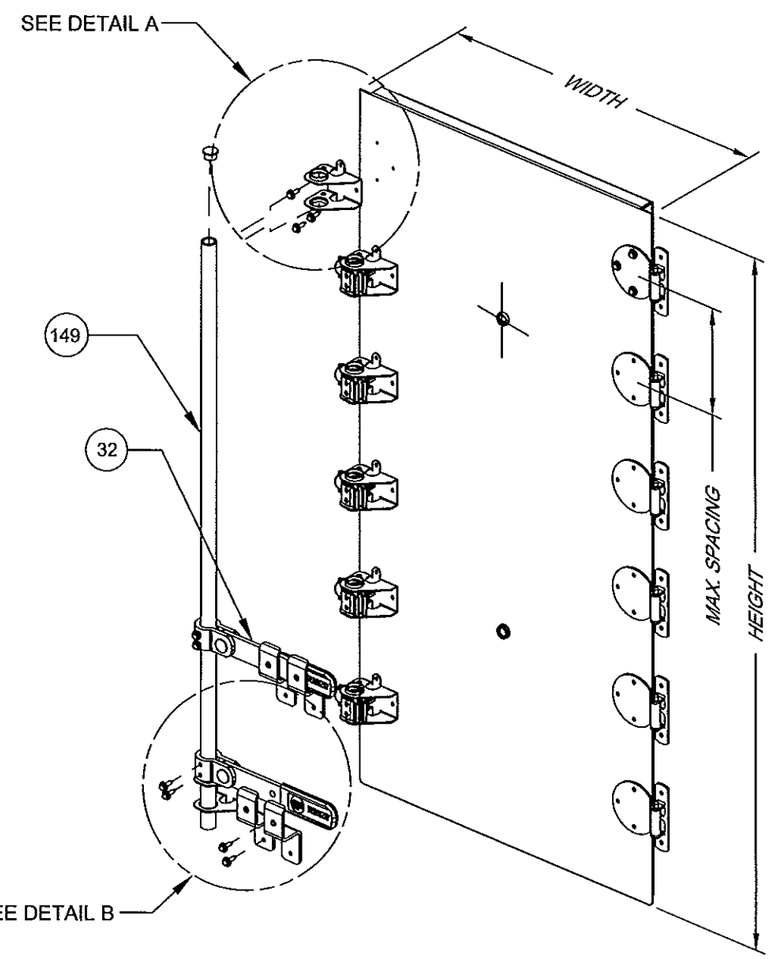

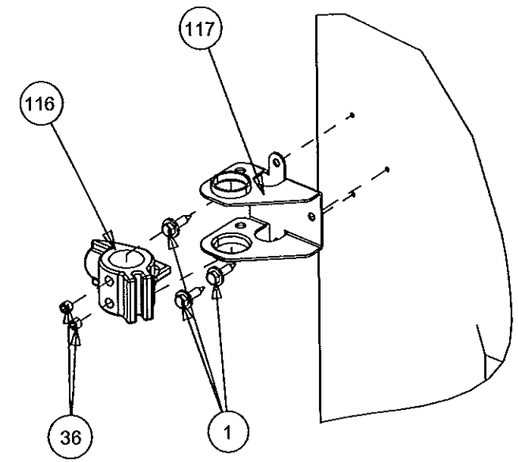

DETAIL A

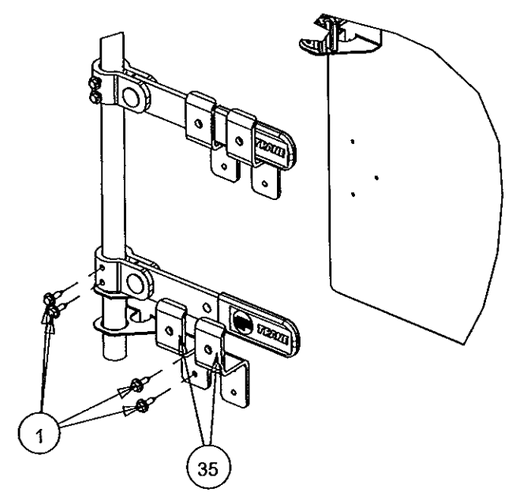

DETAIL B

SECTION DESCRIPTION	MAXIMUM DOOR SIZE WIDTH x HEIGHT	HINGE MAX. SPACING	HINGE QTY	PADLOCK BRACKETS PER HANDLE	HANDLE QTY
STANDARD UNIT	30 29/32" x 68 15/16"	11.844	6	2	2
STANDARD UNIT	20 11/32" x 68 15/16"	11.844	6	2	2
STANDARD UNIT	23 11/32" x 68 15/16"	11.844	6	2	2
STANDARD UNIT	14 7/8" x 68 15/16"	11.816	6	2	2
PIPE CABINET	30 7/8" x 68 15/16"	11.598	6	2	2
2-LEVEL SECTION	14 7/8" x 68 15/16"	11.813	6	2	2

Approved as complying with the Florida Building Code
Date 11/21/2013
NOA# 12-0629.02
Miami Dade Product Control
By

PRODUCT REVISED
as complying with the Florida Building Code
Acceptance No 14-1120.13
Expiration Date 11/21/2018
By
Miami Dade Product Control

SCOTT WOLTERS
FL PE# 62354
WOLTERS ENGINEERING, INC.
(COA# 27194)
5358 SW 32ND TERRACE
FT. LAUDERDALE, FL 33312
NOV 06 2013

DRAWING # AIRS0672	DESC. TRANE PERFORMANCE CLIMATE CHANGER AIR HANDLER - SIZE 50 STACKED UNIT	TRANE US Inc.	REV. HISTORY ---	BY: K.YUVARAJA	REV. A
SHEET 9 OF 47 / SECTION			MOCK UPDWG SHEET REF: 9 OF 19, 16 OF 63, 19 OF 35	SCALE: NTS	DATE 06-SEP-2013

COMPONENTS ON DOOR

NOTES:
1. THIS PAGE IS SHOWING ALL THE COMPENTS ATTACHED AND TESTED WITH DOORS.
2. THESE COMPONENTS APPLICABLE TO ALL DOORS.

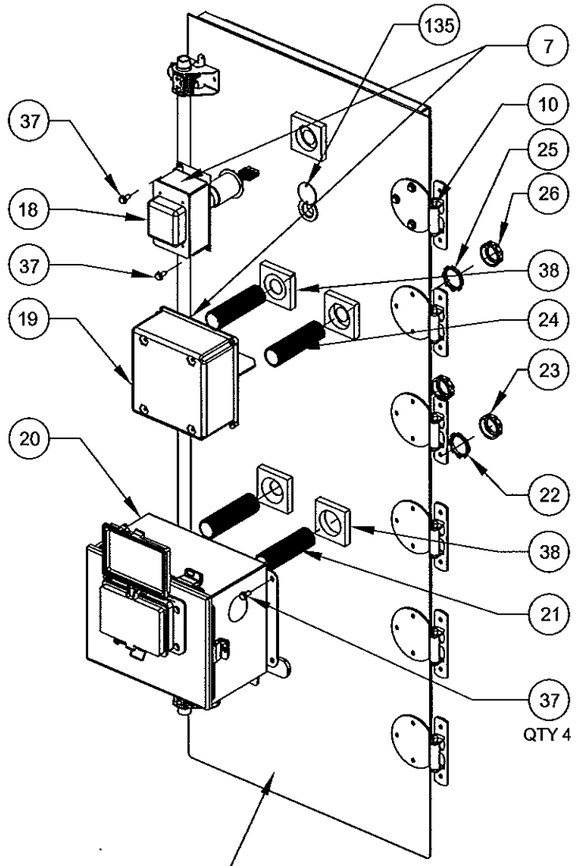

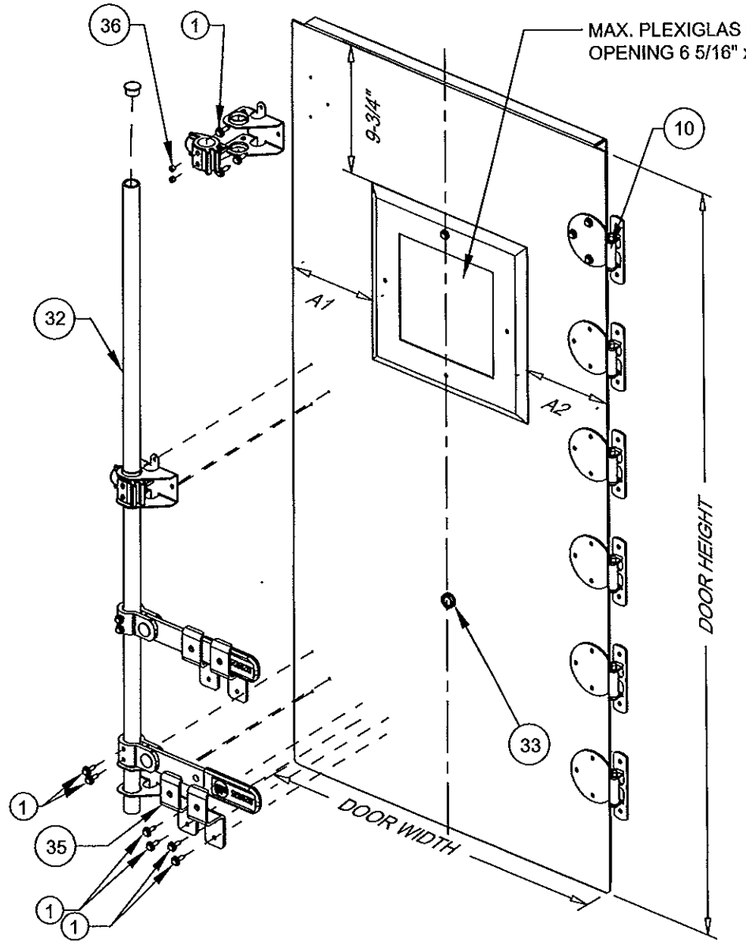

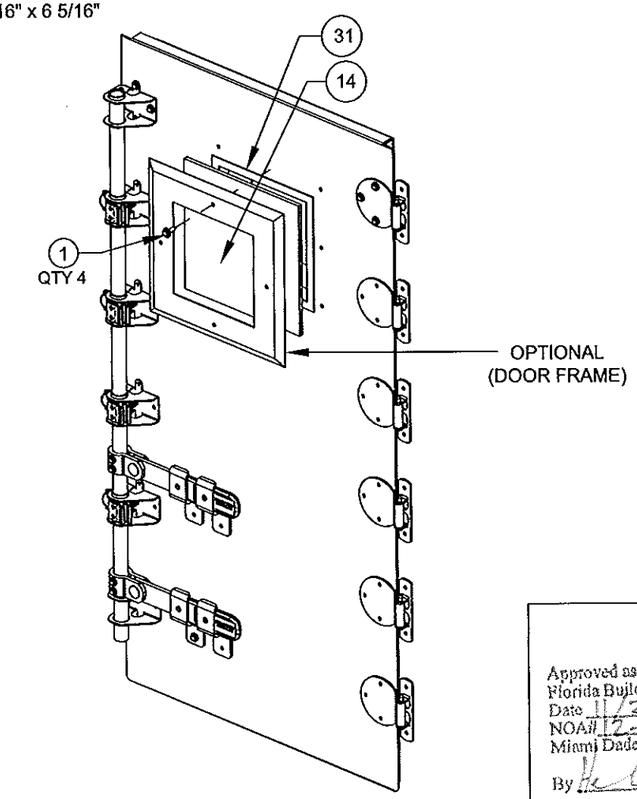

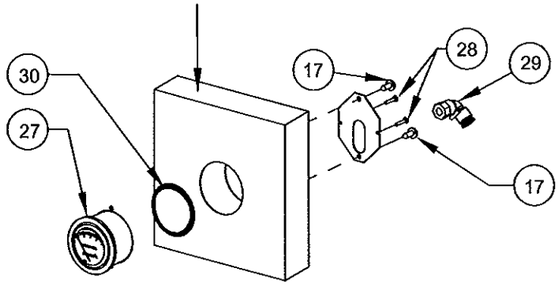

DOOR HARDWARE AND
OPTIONAL COMPONENTS

DOOR WIDTH	A1	A2
14.853	3	3
23.353	7.5	7

Approved as complying with the Florida Building Code
Date 11/21/2013
NOA# 12-0629.02
Miami Dade Product Control
By

PRODUCT REVISED
as complying with the Florida Building Code
Acceptance No 14-1120.13
Expiration Date 11/21/2018
By
Miami Dade Product Control

SCOTT WOLTERS
FL PE# 62354
WOLTERS ENGINEERING, INC.
(COA# 27194)
5358 SW 32ND TERRACE
FT. LAUDERDALE, FL 33312
NOV 06 2013

DRAWING #	DESC.		REV. HISTORY	BY:	REV.
AIRS0672	TRANE PERFORMANCE CLIMATE CHANGER AIR HANDLER - SIZE 50 STACKED UNIT	TRANE US Inc.	---	K.YUVARAJA	A
SHEET 10 OF 47 / SECTION			MOCK UPDWG SHEET REF: 17-19 OF 63	SCALE: NTS	DATE 06-SEP-2013

1ST LEVEL BASE RAIL AND BASE PANEL

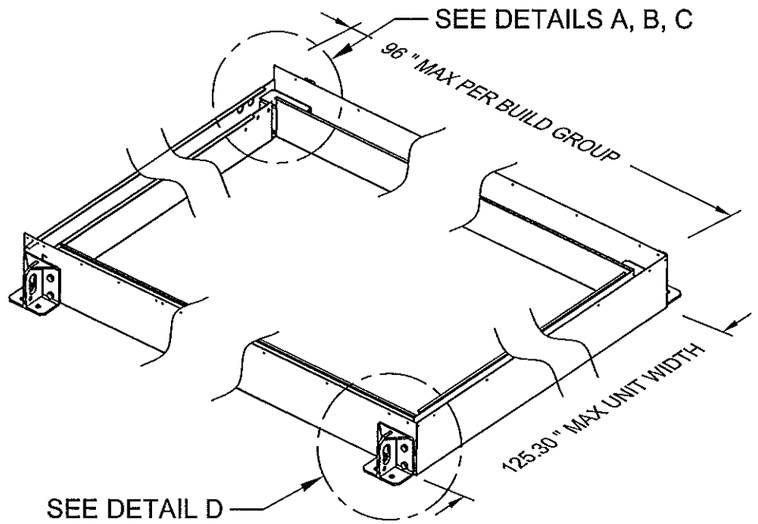

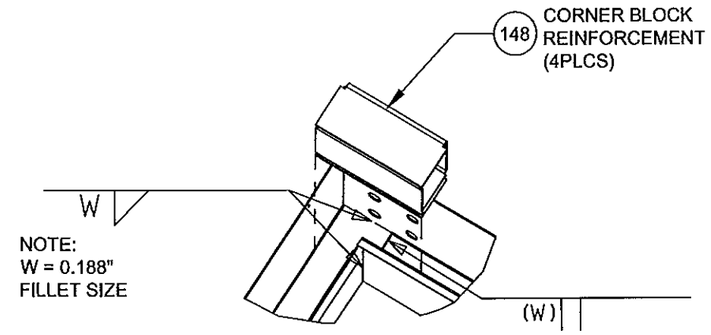

DETAIL A

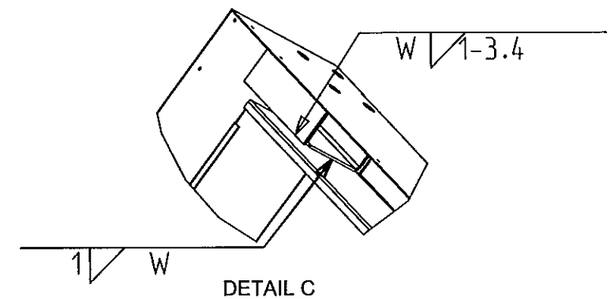

DETAIL C

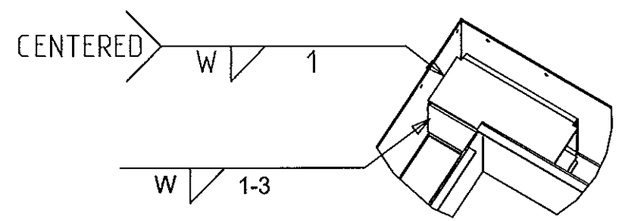

DETAIL B

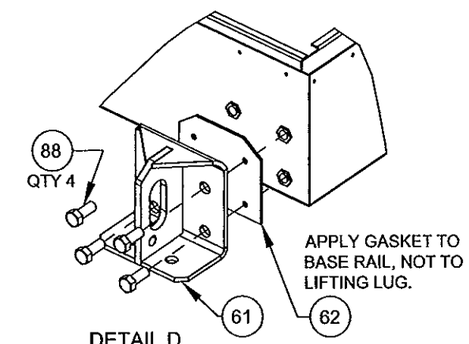

DETAIL D

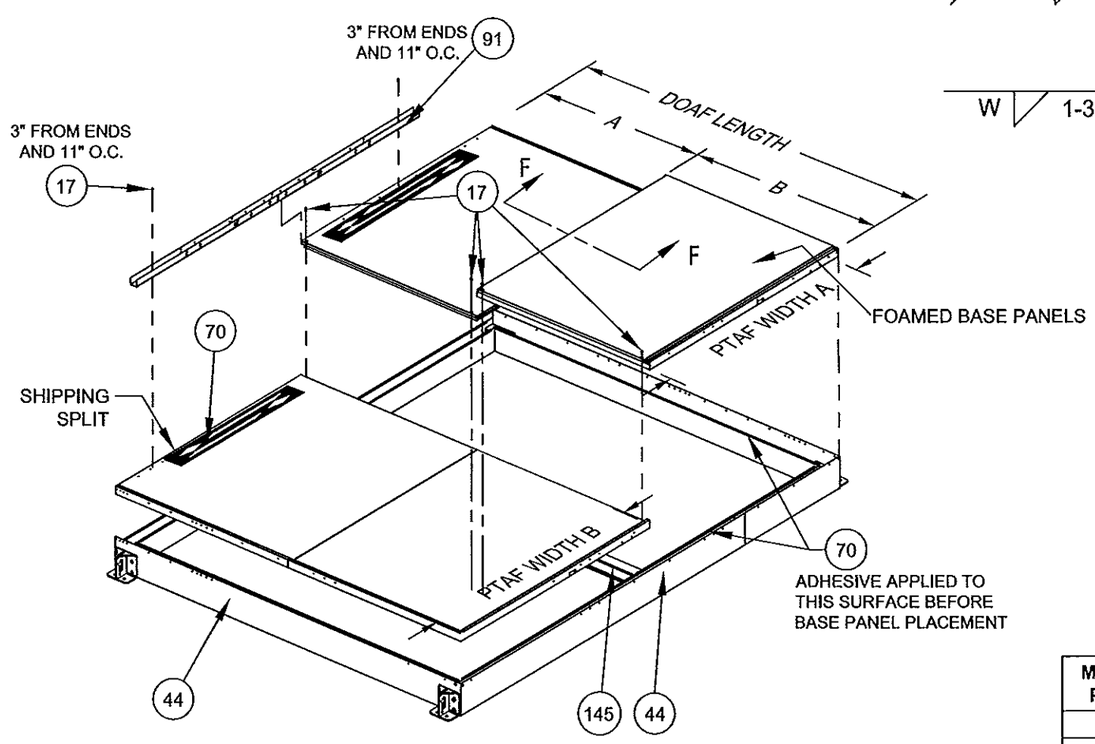

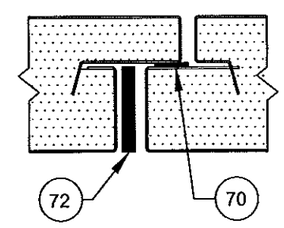

DETAIL F-F

MAX. DOAF BASE PANEL LENGTH		MAX. PTAF BASE PANEL LENGTH	
A	B	A	B
49	49	63.466	62.491

Approved as complying with the Florida Building Code
Date 11/21/2013
NOA# 12-0629.02
Miami Dade Product Control
By

PRODUCT REVISED
as complying with the Florida Building Code
Acceptance No 14-1120.13
Expiration Date 11/21/2018
By
Miami Dade Product Control

SCOTT WOLTERS
FL PE# 62354
WOLTERS ENGINEERING, INC.
(COA# 27194)
5358 SW 32ND TERRACE
FT. LAUDERDALE, FL 33312
NOV 06 2013

DRAWING #	DESC.		REV. HISTORY	BY:	REV.
AIRS0672	TRANE PERFORMANCE CLIMATE CHANGER AIR HANDLER - SIZE 50 STACKED UNIT	TRANE US Inc.	---	K.YUVARAJA	A
SHEET 11 OF 47 / SECTION			MOCK UPDWG SHEET REF: 25 OF 63	SCALE: NTS	DATE 06-SEP-2013

2ND LEVEL BASE RAIL

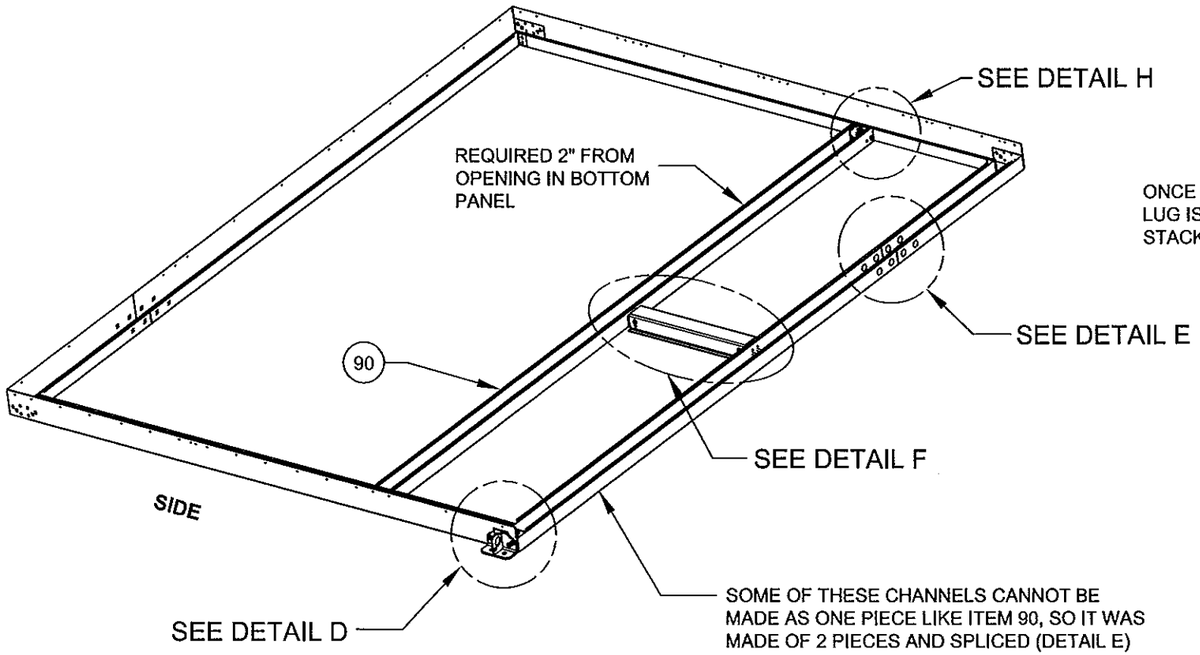

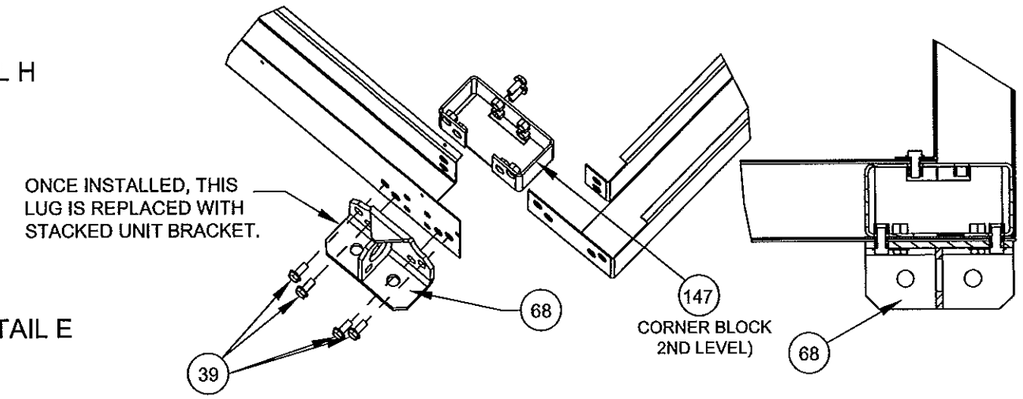

DETAIL D

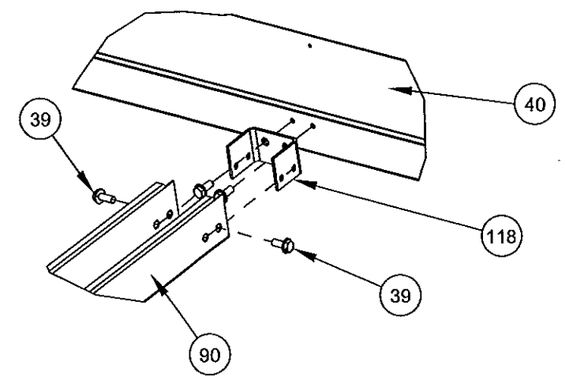

DETAIL H

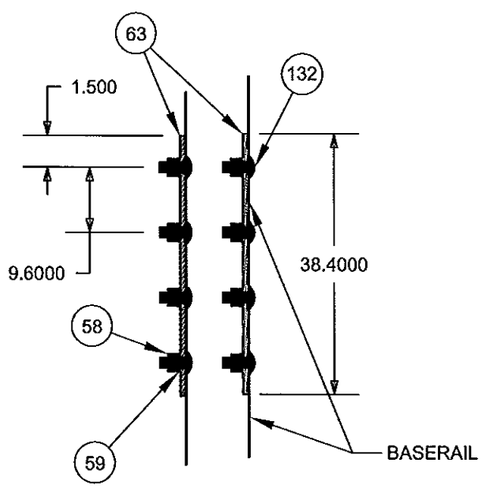

DETAIL E

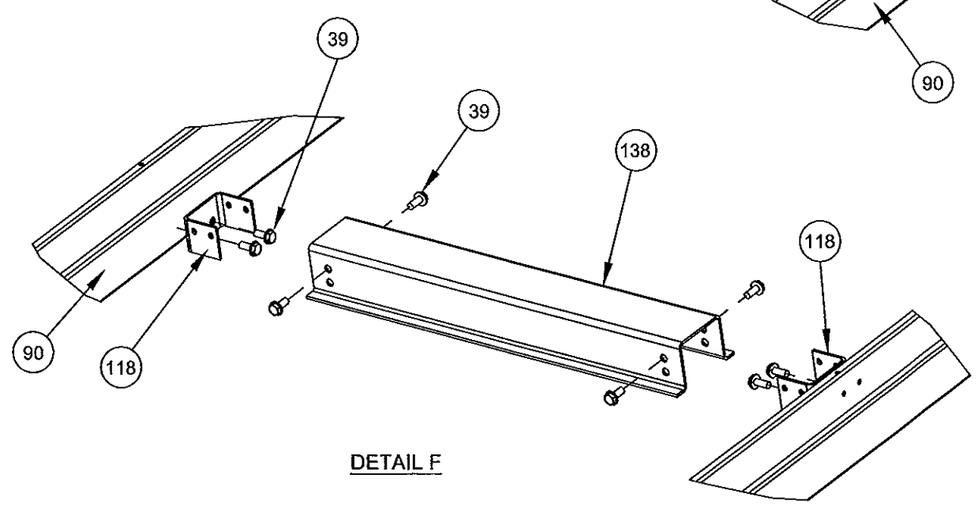

DETAIL F

NOTE:
1. BASE PANELS ARE THE SAME AS 1ST LEVEL BASE.

Approved as complying with the Florida Building Code
Date 11/21/2013
NOA# 12-0629.02
Miami Dade Product Control
By

PRODUCT REVISED
as complying with the Florida Building Code
Acceptance No 14-1120.13
Expiration Date 11/21/2018
By
Miami Dade Product Control

SCOTT WOLTERS
FL PE# 62354
WOLTERS ENGINEERING, INC.
(COA# 27194)
5358 SW 32ND TERRACE
FT. LAUDERDALE, FL 33312
NOV 06 2013

DRAWING #	DESC.		REV. HISTORY	BY:	REV.
AIRS0672	TRANE PERFORMANCE CLIMATE CHANGER AIR HANDLER - SIZE 50 STACKED UNIT	TRANE US Inc.	---	K.YUVARAJA	A
SHEET 12 OF 47 / SECTION			MOCK UPDWG SHEET REF: 28 OF 63	SCALE: NTS	DATE 06-SEP-2013

TYPICAL WALL PANEL LAYOUT & SUPPORT STRUCTURE (FULL HEIGHT)

(SHOWING EOU WALL STRUCTURE WITH OPENING)

SEE PAGE 17

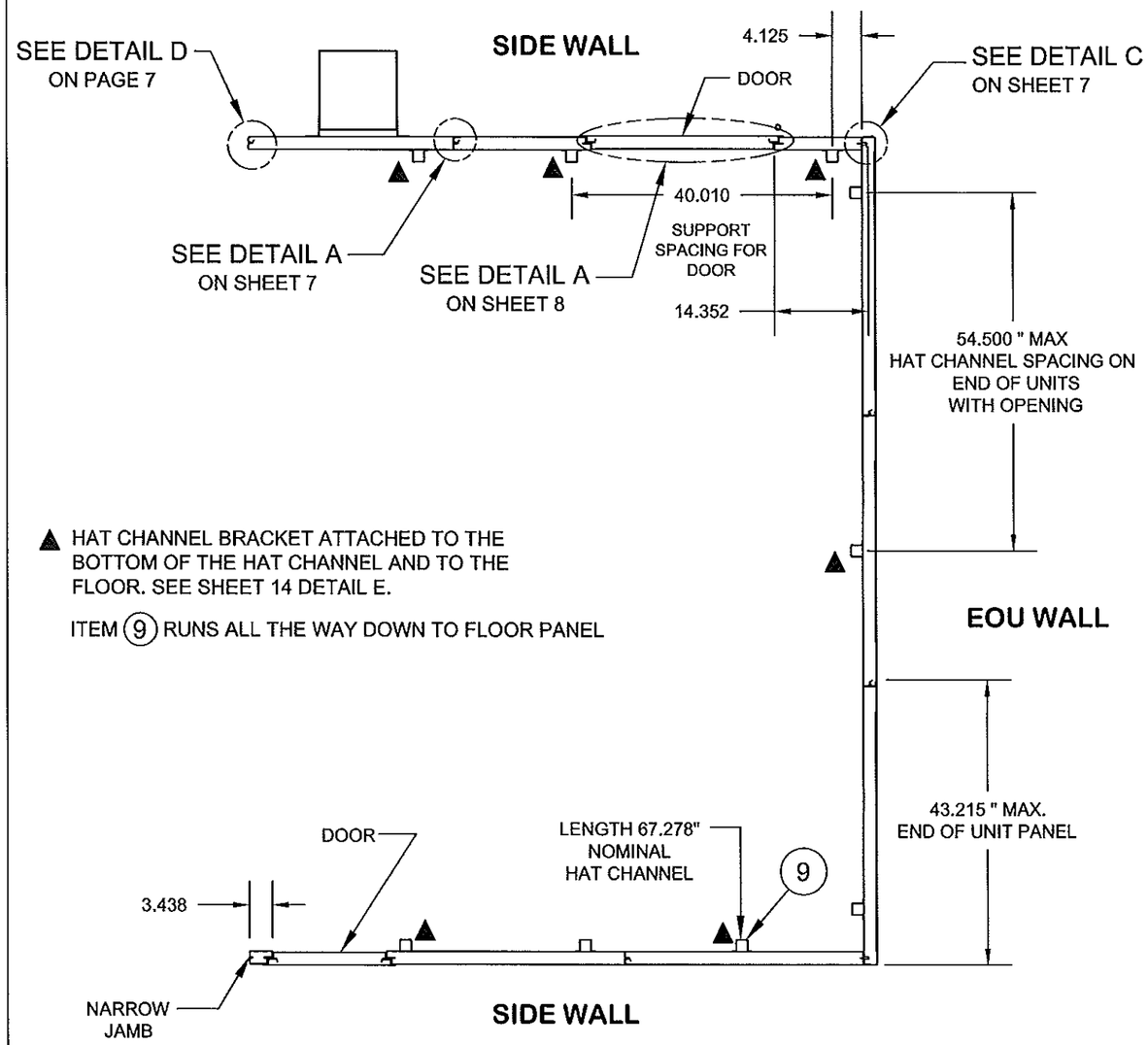

▲ HAT CHANNEL BRACKET ATTACHED TO THE BOTTOM OF THE HAT CHANNEL AND TO THE FLOOR. SEE SHEET 14 DETAIL E.

ITEM (9) RUNS ALL THE WAY DOWN TO FLOOR PANEL

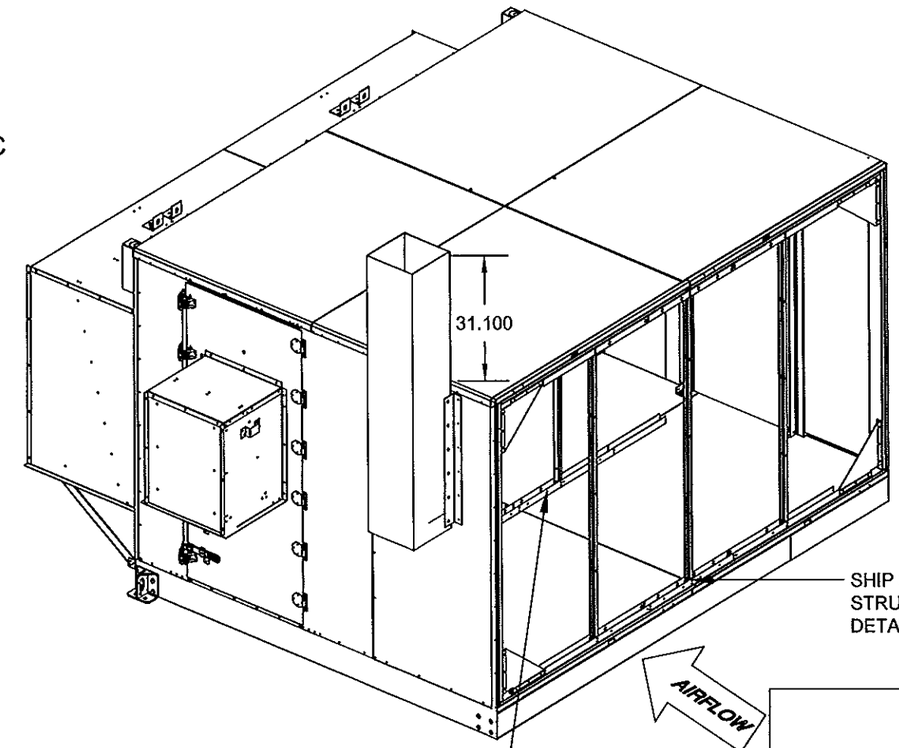

THIS STRUCTURE REPRESENTS THE INTERNAL COMPENENT ATTACHMENT AT 48" UNSUPPORTED SPAN IN DIRECTION OF AIR FLOW

Approved as complying with the Florida Building Code
Date 11/21/2013
NOA# 12-0629.02
Miami Dade Product Control
By

PRODUCT REVISED
as complying with the Florida Building Code
Acceptance No 14-1120.13
Expiration Date 11/21/2018
By
Miami Dade Product Control

SCOTT WOLTERS
FL PE# 62354
WOLTERS ENGINEERING, INC.
(COA# 27194)
5358 SW 32ND TERRACE
FT. LAUDERDALE, FL 33312
NOV 06 2013

DRAWING #	DESC.		REV. HISTORY	BY:	REV.
AIRS0672	TRANE PERFORMANCE CLIMATE CHANGER AIR HANDLER - SIZE 50 STACKED UNIT	TRANE US Inc.	---	K.YUVARAJA	A
SHEET 13 OF 47 / SECTION			MOCK UPDWG SHEET REF: 5, 6 OF 63	SCALE: NTS	DATE 06-SEP-2013

TYPICAL WALL PANEL LAYOUT & WALL SUPPORT STRUCTURE (BOTH FULL HEIGHT AND SHORT)

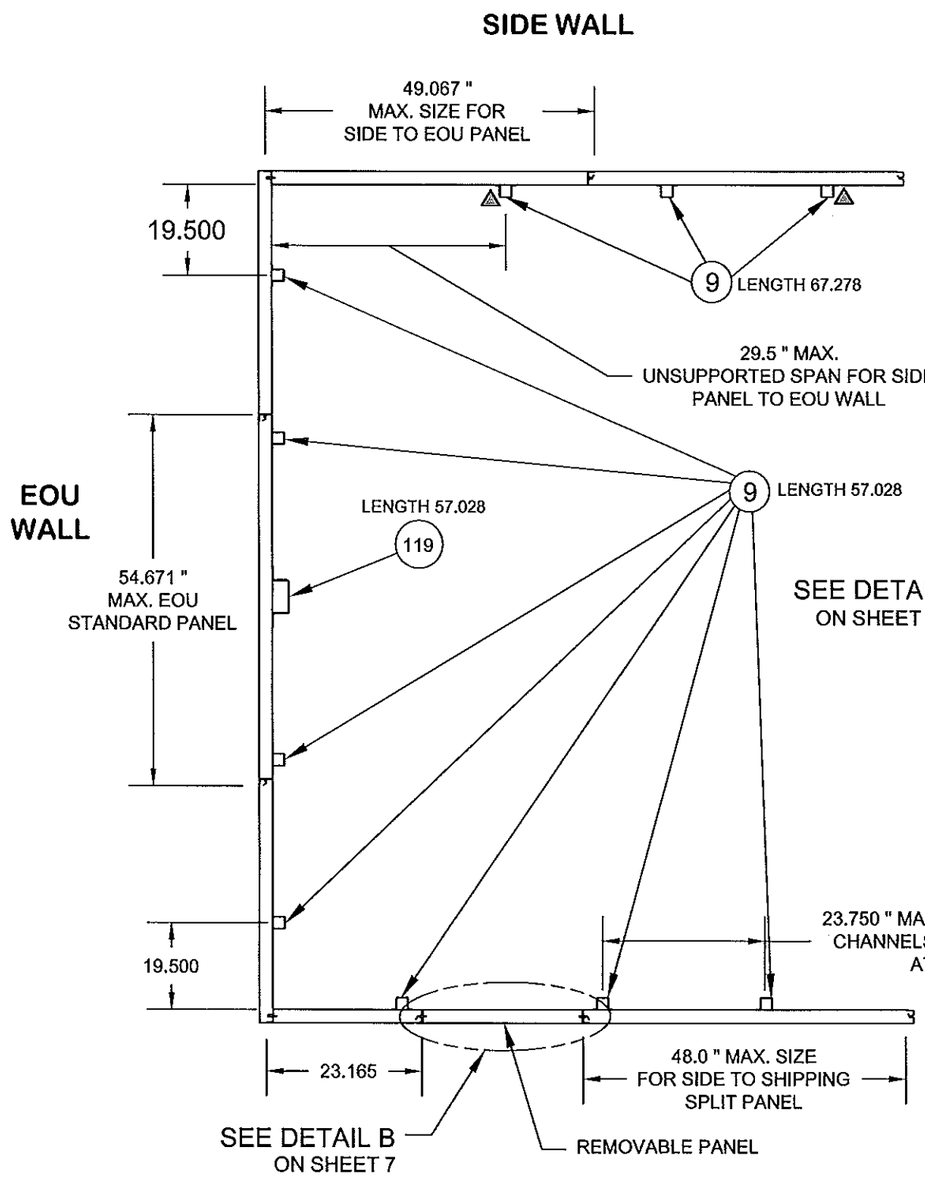

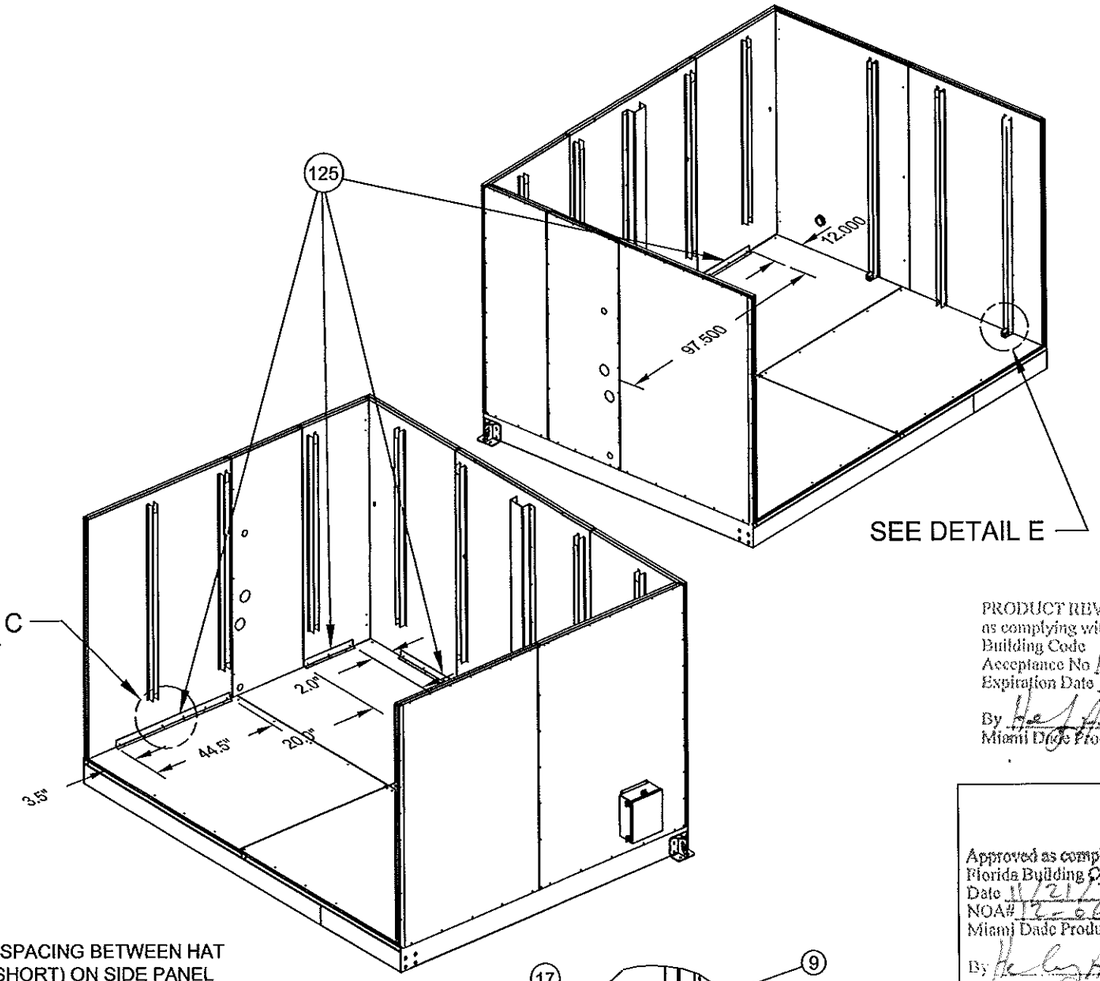

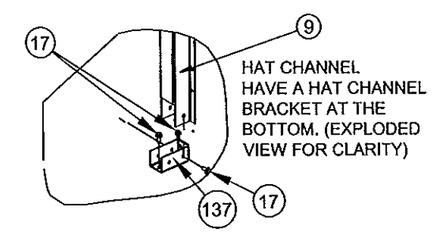

▲ HAT CHANNEL BRACKET ATTACHED TO THE BOTTOM OF THE HAT CHANNEL AND TO THE FLOOR.

DETAIL E. HAT CHANNEL TO BRACKET.
(NOT ALL ITEM 9 ATTACHED TO THE FLOOR, THERE IS 48" MAX SPACING BETWEEN ITEM 9 THAT IS ATTACHED TO THE FLOOR WITH ITEM 137)

NOTES:
1. WHEN ITEM 9 IS SHORT, ADD ITEM 125 AS SHOWN BY DETAIL C ON PAGE 17.

PRODUCT REVISED
as complying with the Florida
Building Code
Acceptance No 14-1120.13
Expiration Date 11/21/2018
By
Miami Dade Product Control

Approved as complying with the
Florida Building Code
Date 11/21/2013
NOA# 12-0629.02
Miami Dade Product Control
By

SCOTT WOLTERS
FL PE# 62354
WOLTERS ENGINEERING, INC.
(COA# 27194)
5358 SW 32ND TERRACE
FT. LAUDERDALE, FL 33312
NOV 06 2013

DRAWING #	DESC.		REV. HISTORY	BY:	REV.
AIRS0672	TRANE PERFORMANCE CLIMATE CHANGER AIR HANDLER - SIZE 50 STACKED UNIT	TRANE US Inc.	---	K.YUVARAJA	A
SHEET 14 OF 47 / SECTION			MOCK UPDWG SHEET REF: 7,8 OF 63	SCALE: NTS	DATE 06-SEP-2013

TYPICAL WALL PANEL LAYOUT & SUPPORT STRUCTURE FOR BACK TO BACK REMOVABLE PANEL

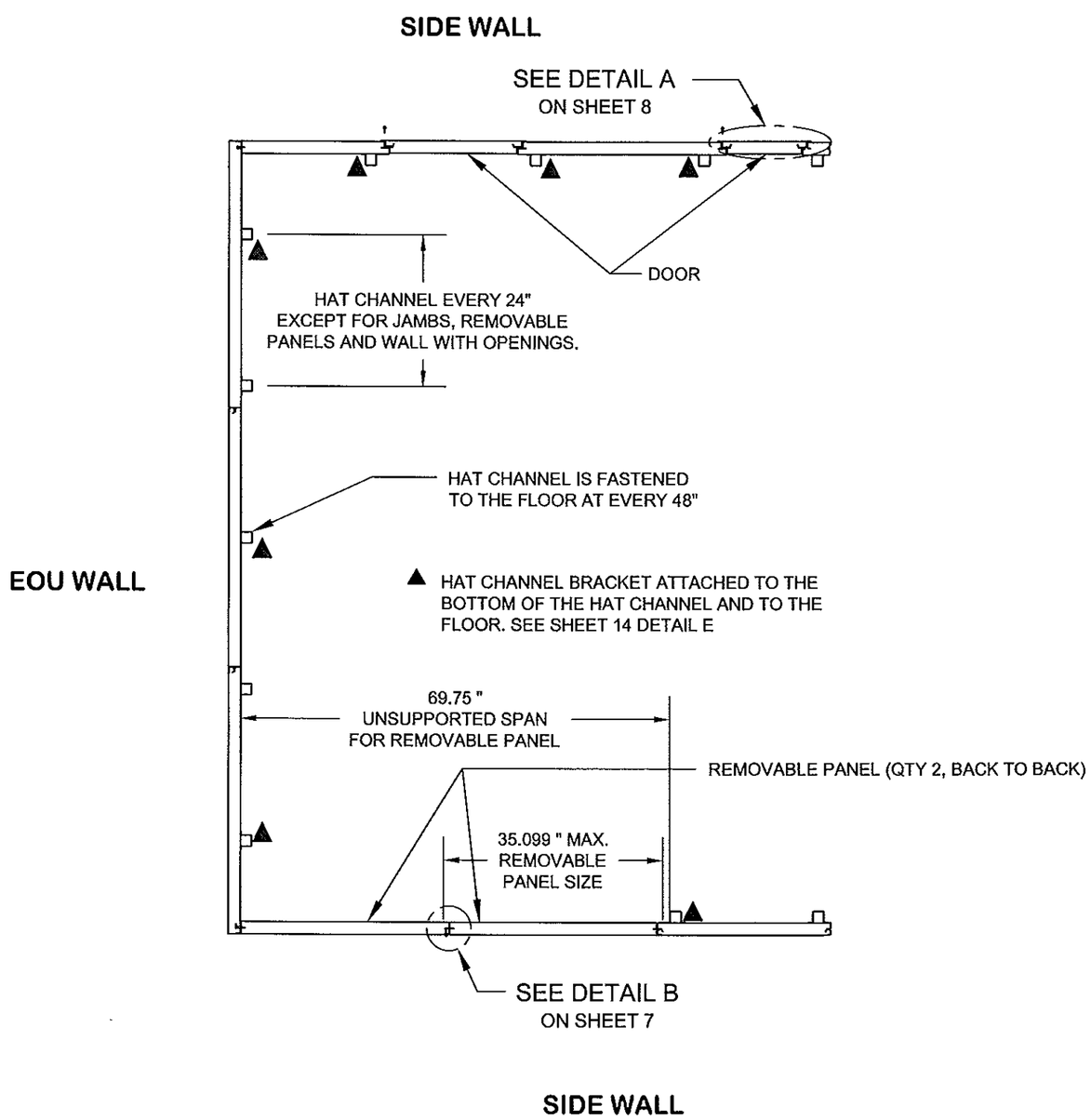

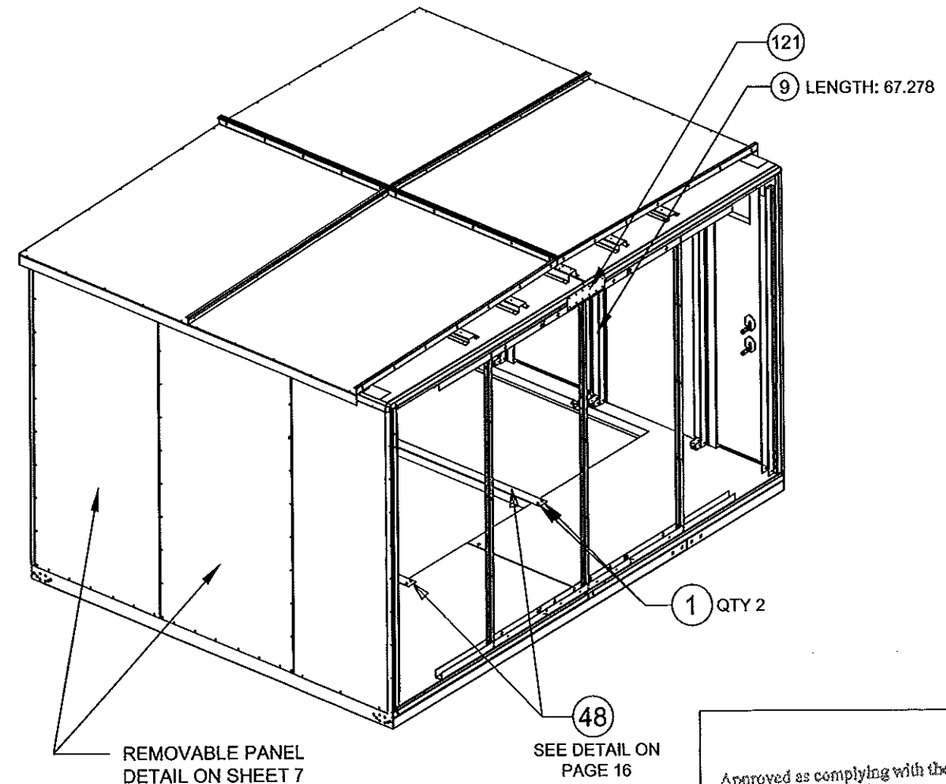

Approved as complying with the Florida Building Code
Date 11/21/2013
NOA# 13-0629.02
Miami Dade Product Control
By

PRODUCT REVISED
as complying with the Florida Building Code
Acceptance No 14-1120.13
Expiration Date 11/21/2018
By
Miami Dade Product Control

SCOTT WOLTERS
FL PE# 62354
WOLTERS ENGINEERING, INC.
(COA# 27194)
5358 SW 32ND TERRACE
FT. LAUDERDALE, FL 33312
NOV 05 2013

DRAWING #	DESC.		REV. HISTORY	BY:	REV.
AIRS0672	TRANE PERFORMANCE CLIMATE CHANGER AIR HANDLER - SIZE 50 STACKED UNIT	TRANE US Inc.	---	K.YUVARAJA	A
SHEET 15 OF 47 / SECTION			MOCK UPDWG SHEET REF: 9, 10 OF 63	SCALE: NTS	DATE 06-SEP-2013

OPENING SIZES & MULLION DETAILS ON BASE AND ROOF

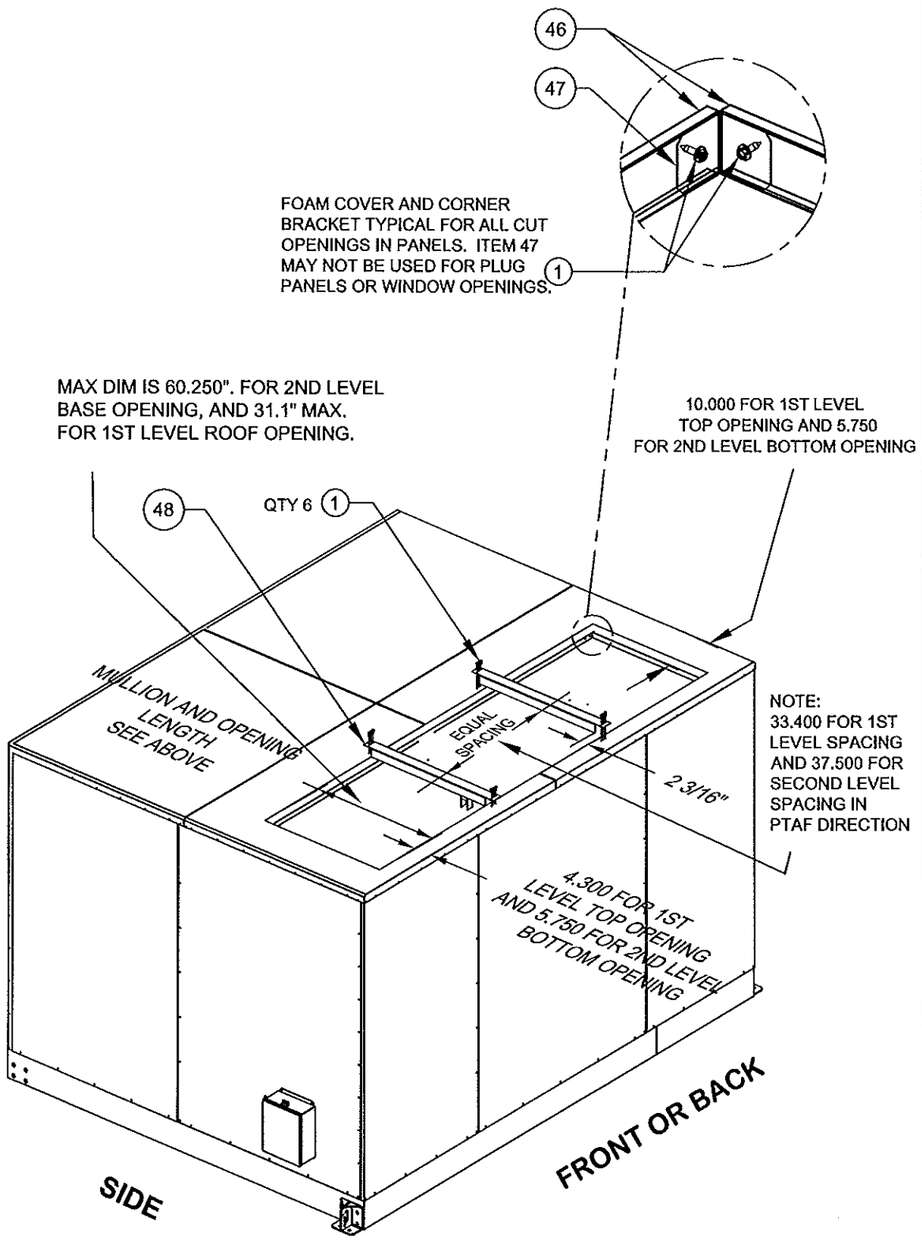

DETAIL D.
MULLION DETAIL

OPENING BORDER DIMENSIONS APPLICABLE TO UNIT SIZES 50 AND BELOW

OTHER GENERIC COMPONENT

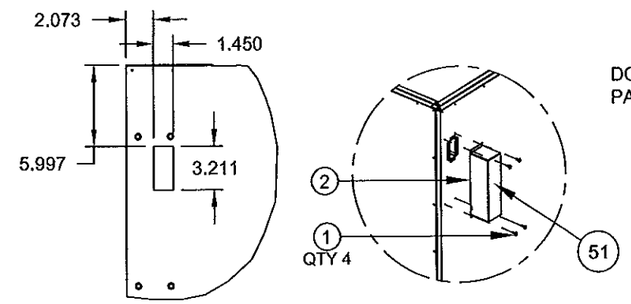

DETAIL A. RACEWAY DETAIL
(ATTACHED TO BACK OR FRONT OF THE UNIT)
IT IS PENETRATION CORE ON THE UNIT TO RUN THE CABLES TO STACKED UNITS

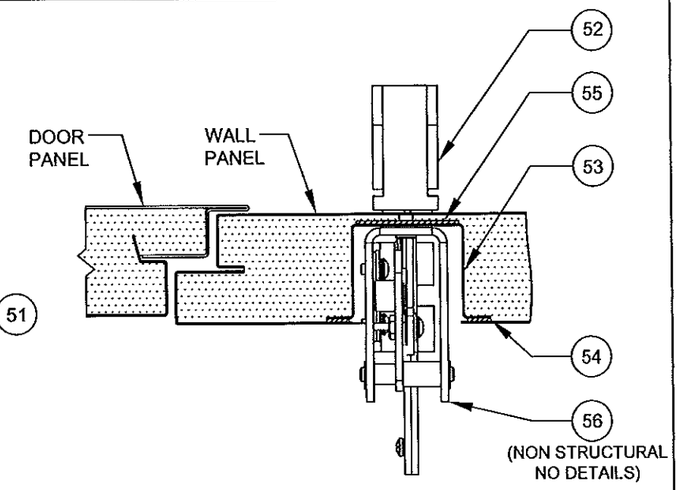

DETAIL C. DISCONNECT HANDLE
APPLICABLE TO ALL THE UNITS

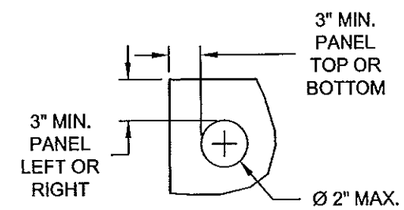

DETAIL B. FIELD-DRILLED HOLE DETAIL
APPLICABLE TO ALL PANELS

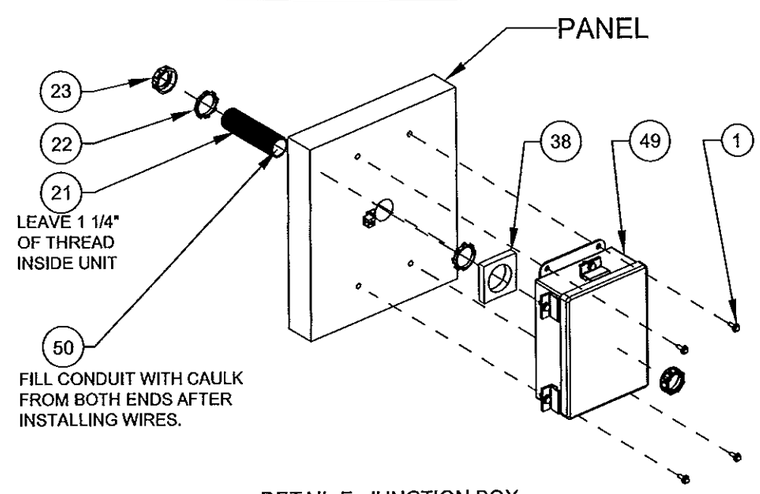

DETAIL E. JUNCTION BOX
APPLICABLE TO ALL THE UNITS

PRODUCT REVISED
as complying with the Florida Building Code
Acceptance No 14-1120.13
Expiration Date 11/21/2018
By
Miami Dade Product Control

Approved as complying with the Florida Building Code
Date 11/21/2013
NOA# 12-0629.02
Miami Dade Product Control
By

SCOTT WOLTERS
FL PE# 62354
WOLTERS ENGINEERING, INC.
(COA# 27194)
5358 SW 32ND TERRACE
FT. LAUDERDALE, FL 33312
NOV 06 2013

DRAWING #	DESC.		REV. HISTORY	BY:	REV.
AIRS0672	TRANE PERFORMANCE CLIMATE CHANGER AIR HANDLER - SIZE 50 STACKED UNIT	TRANE US Inc.	---	K.YUVARAJA	A
SHEET 16 OF 47 / SECTION			MOCK UPDWG SHEET REF: 7, 10, 12, 22, 23 OF 63	SCALE: NTS	DATE 06-SEP-2013

WALL SUPPORT STRUCTURE INSTALL

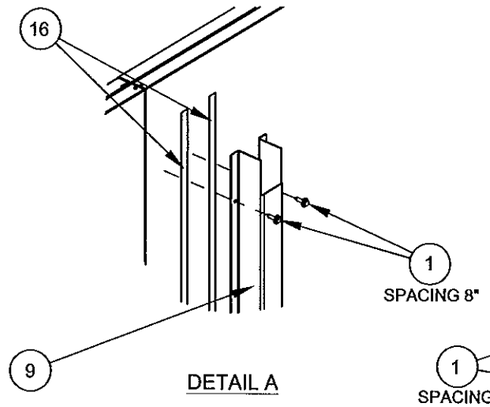

DETAIL A

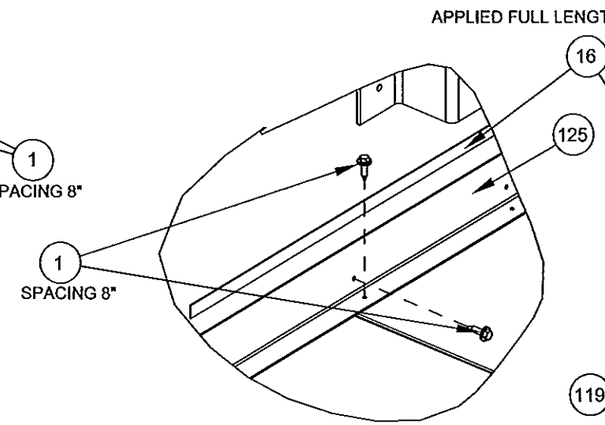

DETAIL C

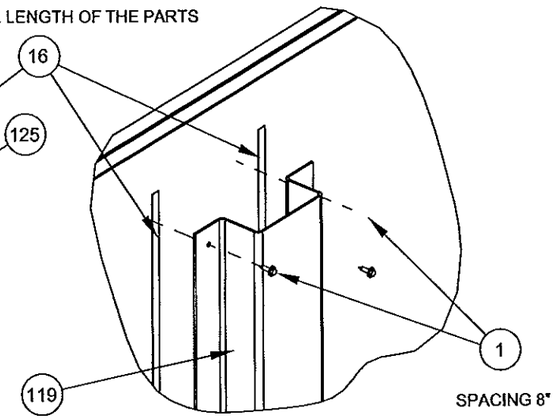

DETAIL B

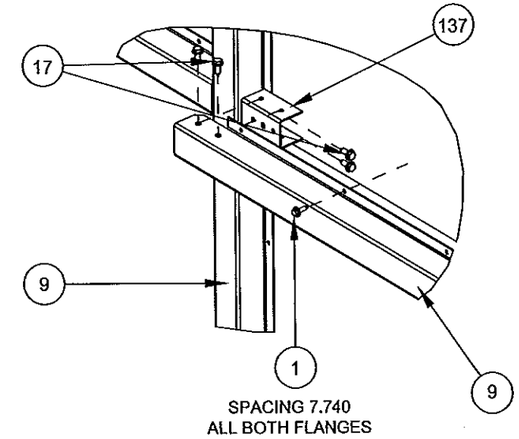

DETAIL D

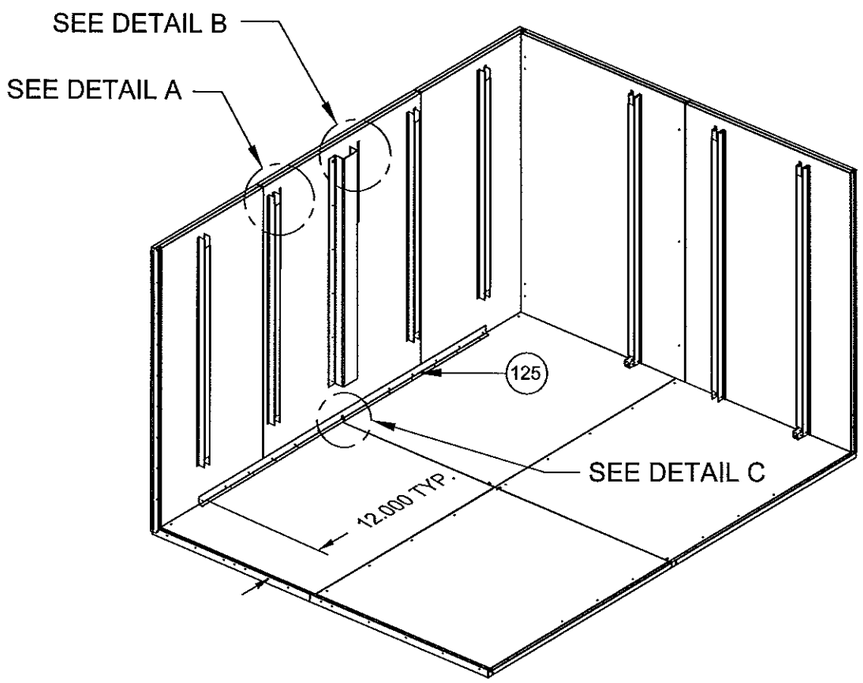

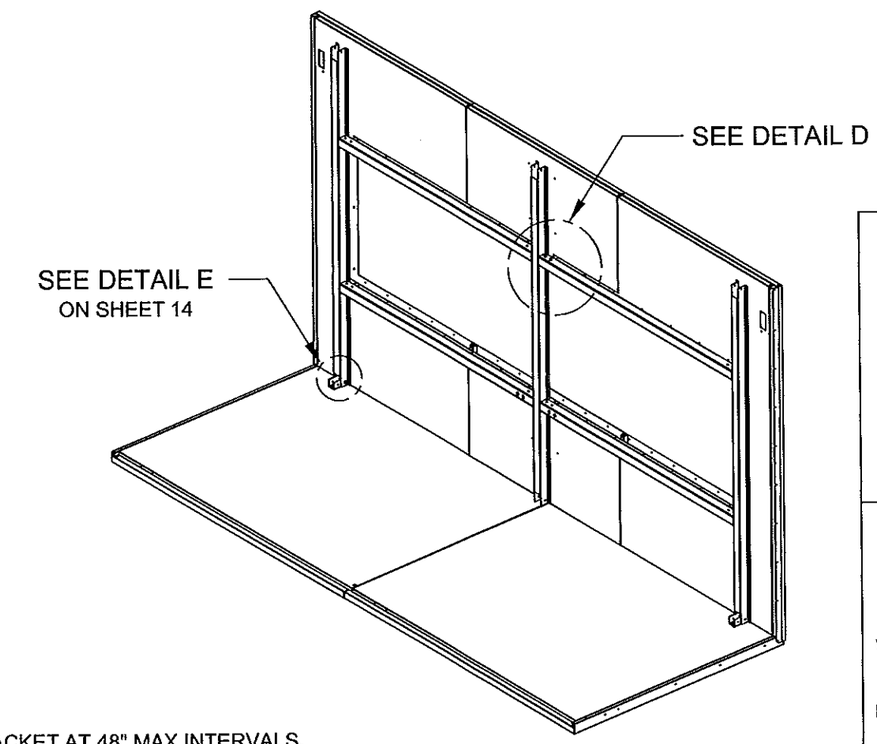

PRODUCT REVISED
as complying with the Florida
Building Code
Acceptance No 14-1120.13
Expiration Date 11/21/2018
By
Miami Dade Product Control

Approved as complying with the
Florida Building Code
Date 11/21/2013
NOA# 12-0629.02
Miami Dade Product Control
By

SCOTT WOLTERS
FL PE# 62354
WOLTERS ENGINEERING, INC.
(COA# 27194)
5358 SW 32ND TERRACE
FT. LAUDERDALE, FL 33312

NOV 06 2013

NOTES:
1. ALL HAT CHANNELS AND OPENING SUPPORT CHANNELS ARE ADHESIVED WITH ITEM 16.(TYPICAL)
2. HAT CHANNELS THAT DROPS DOWN TO THE FLOOR WILL BE ATTACHED TO THE FLOOR WITH A BRACKET AT 48" MAX INTERVALS. ITEM 9 AT THE ENDS OF THE OPENING WILL BE ATTACHED TO THE FLOOR AS WELL.

DRAWING # AIRS0672	DESC. TRANE PERFORMANCE CLIMATE CHANGER AIR HANDLER - SIZE 50 STACKED UNIT	TRANE US Inc.	REV. HISTORY ---	BY: K.YUVARAJA	REV. A
SHEET 17 OF 47 / SECTION			MOCK UPDWG SHEET REF: 39, 40 OF 63	SCALE: NTS	DATE 06-SEP-2013

ROOF PANEL CONSTRUCTION (B-B PAGE 5)

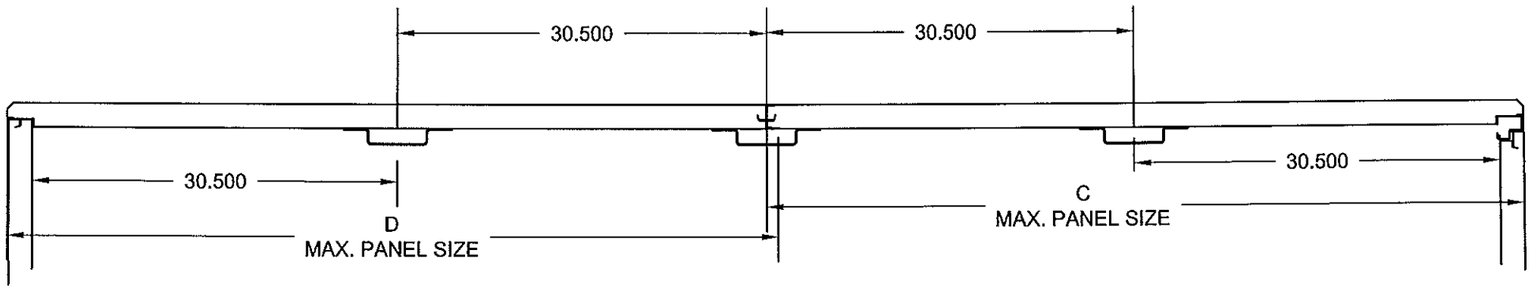

AIRFLOW DIRECTION IS INTO THE PAGE

ROOF PANEL MAX DIMENSIONS			
A	B	C	D
49.084	49.034	62.836	63.836

ROOF PANEL CONSTRUCTION (A-A PAGE 6)

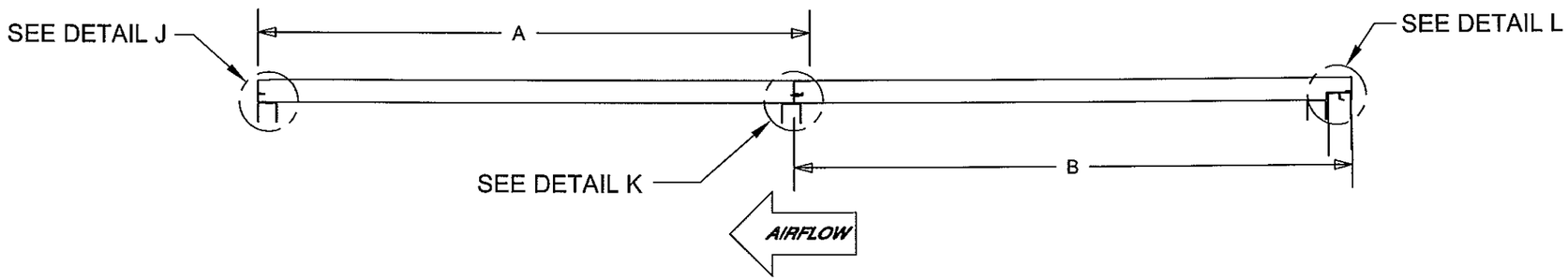

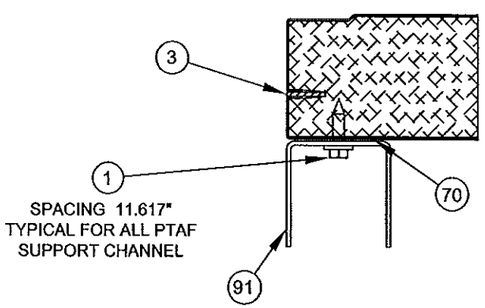

DETAIL J
SHIP SPLIT SUPPORT ANGLE
PTAF (91) ON ROOF

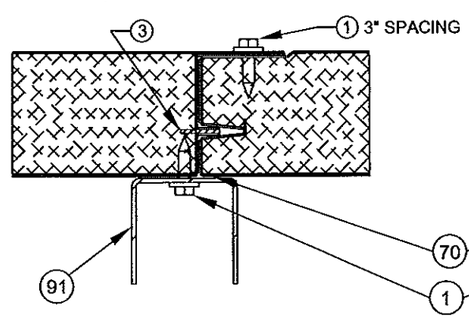

DETAIL K
INTERNAL SUPPORT ANGLE PTAF (91) ON ROOF
(THIS COMPONENTS MIMICS THE INTERNAL
COMPONENT ATTACHMENT ON THE ROOF)

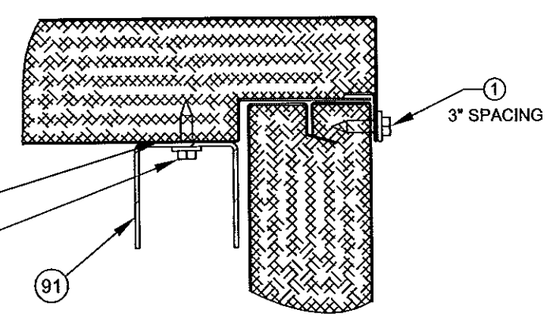

DETAIL L
EOU PTAF ON THE ROOF

PRODUCT REVISED
as complying with the Florida
Building Code
Acceptance No 14-1120.13
Expiration Date 11/21/2018
By
Miami Dade Product Control

Approved as complying with the
Florida Building Code
Date 11/21/2013
NOA# 12-0629.02
Miami Dade Product Control
By

SCOTT WOLTERS
FL PE# 62354
WOLTERS ENGINEERING, INC.
(COA# 27194)
5358 SW 32ND TERRACE
FT. LAUDERDALE, FL 33312
NOV 06 2013

DRAWING #	DESC.		REV. HISTORY	BY:	REV.
AIRS0672	TRANE PERFORMANCE CLIMATE CHANGER AIR HANDLER - SIZE 50 STACKED UNIT	TRANE US Inc.	---	K.YUVARAJA	A
SHEET 18 OF 47 / SECTION			MOCK UPDWG SHEET REF: 35, 36 OF 63	SCALE: NTS	DATE 06-SEP-2013

ROOF AND OPENING SUPPORT STRUCTURE

(VARIOUS ROOF SUPPORT STRUCTURE SEEN FROM INSIDE THE UNIT)

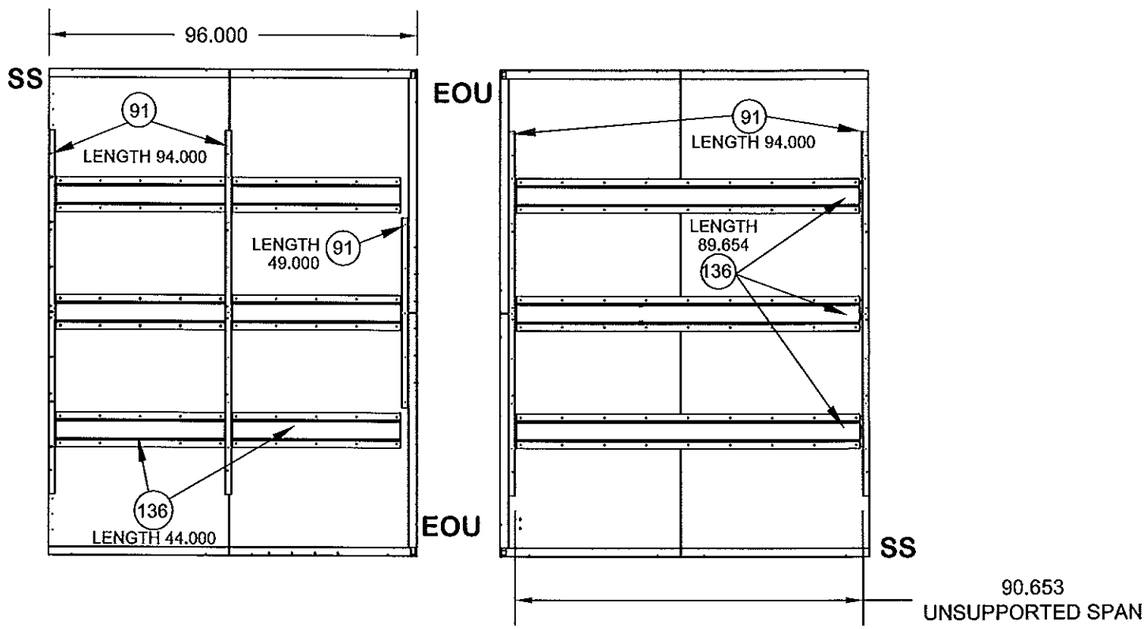

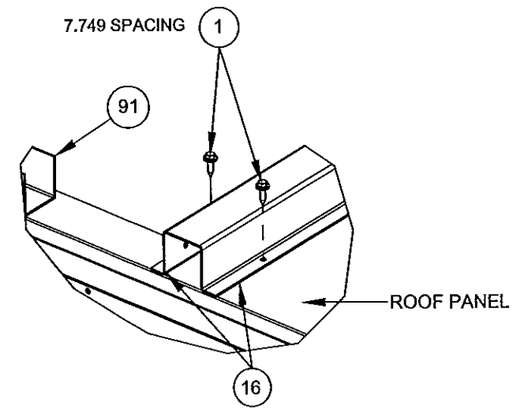

DETAIL A

PTAF AND DOAF SUPPORT
CHANNEL INSTALL GENERIC

EOU - END OF UNIT
SS - SHIPPING SPLIT

PRODUCT REVISED
as complying with the Florida
Building Code
Acceptance No 14-1120.13
Expiration Date 11/21/2018
By
Miami Dade Product Control

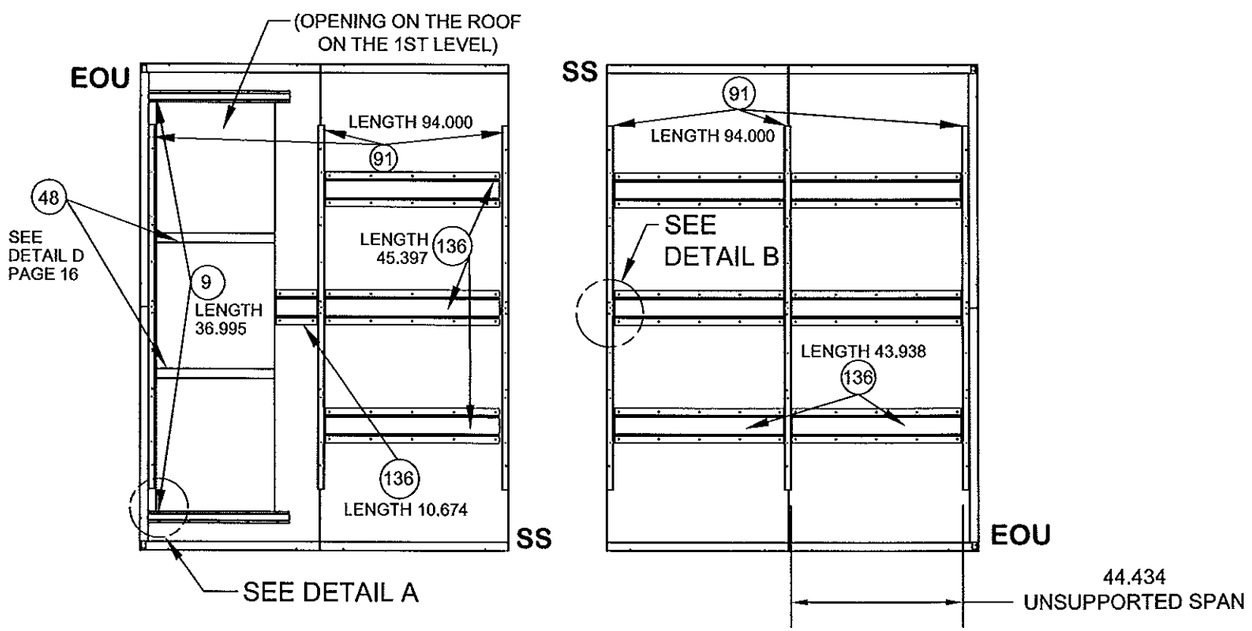

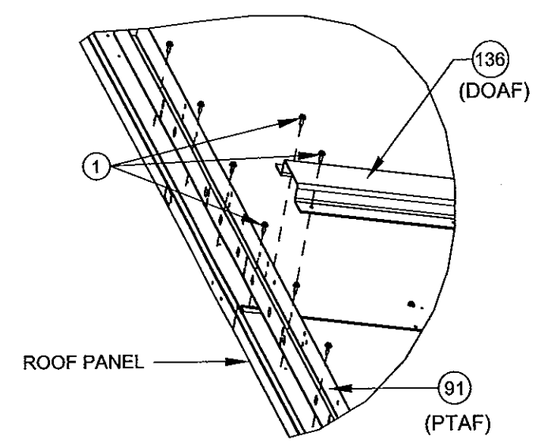

DETAIL B

Approved as complying with the
Florida Building Code
Date 11/21/2013
NOA# 12-0629.02
Miami Dade Product Control
By

SCOTT WOLTERS
FL PE# 62354
WOLTERS ENGINEERING, INC.
(COA# 27194)
5358 SW 32ND TERRACE
FT. LAUDERDALE, FL 33312
NOV 06 2013

DRAWING #	DESC.		REV. HISTORY	BY:	REV.
AIRS0672	TRANE PERFORMANCE CLIMATE CHANGER AIR HANDLER - SIZE 50 STACKED UNIT	TRANE US Inc.	---	K.YUVARAJA	A
SHEET 19 OF 47 / SECTION			MOCK UPDWG SHEET REF: 37, 38 OF 63	SCALE: NTS	DATE 06-SEP-2013

OUTDOOR ROOF TO ROOF PANEL

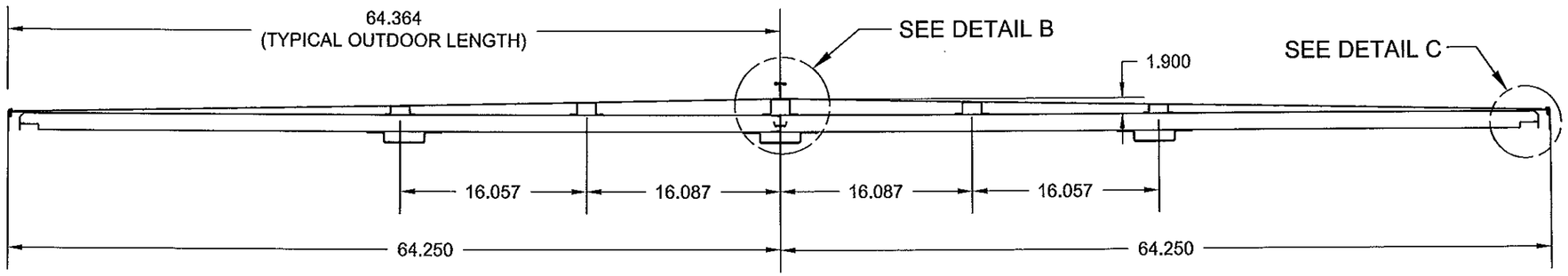

SECTION B-B
(ROOF PANEL WITH OUTDOOR ROOF)

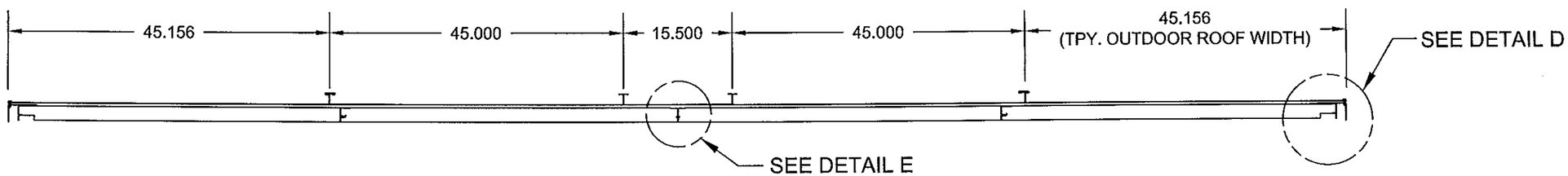

SECTION A-A
(ROOF PANEL WITH OUTDOOR ROOF)

PRODUCT REVISED
as complying with the Florida
Building Code
Acceptance No 14-1120.13
Expiration Date 11/21/2018
By
Miami Dade Product Control

Approved as complying with the
Florida Building Code
Date 11/21/2013
NOA# 12-0629.02
Miami Dade Product Control
By

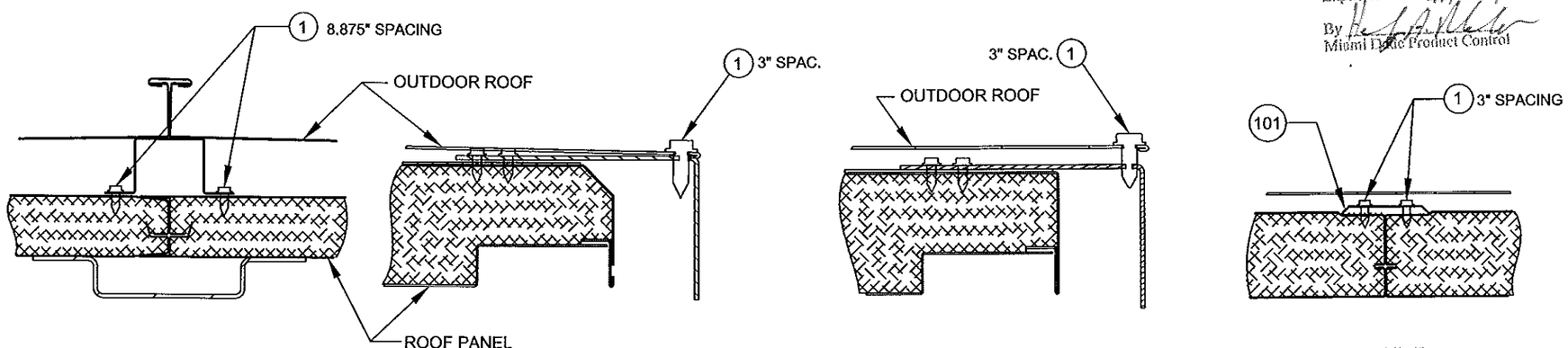

DETAIL B

DETAIL C

DETAIL D

DETAIL E
(TYPICAL SHIPPING SLPLIT JOINT)

SCOTT WOLTERS
FL PE# 62354
WOLTERS ENGINEERING, INC.
(COA# 27194)
5358 SW 32ND TERRACE
FT. LAUDERDALE, FL 33312

NOV 06 2013

DRAWING #	DESC.		REV. HISTORY	BY:	REV.
AIRS0672	TRANE PERFORMANCE CLIMATE CHANGER AIR HANDLER - SIZE 50 STACKED UNIT	TRANE US Inc.	---	K.YUVARAJA	A
SHEET 20 OF 47 / SECTION			MOCK UPDWG SHEET REF: 34 OF 63	SCALE: NTS	DATE 06-SEP-2013

OUTDOOR ROOF DETAILS

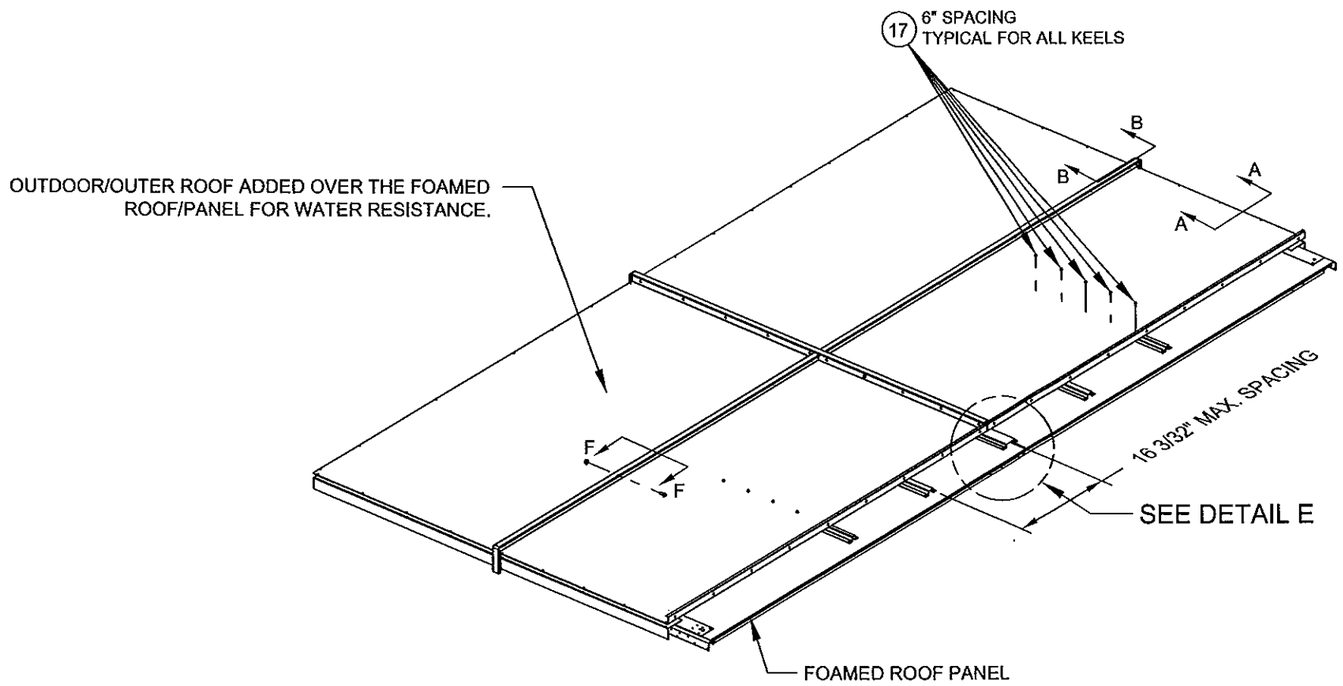

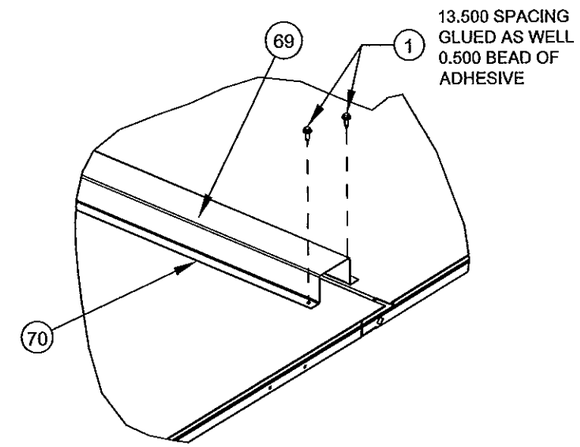

DETAIL E

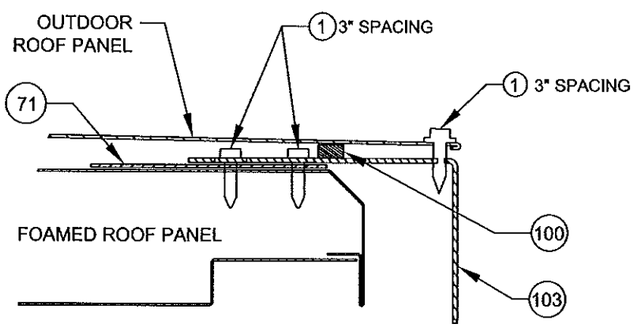

SECTION A-A

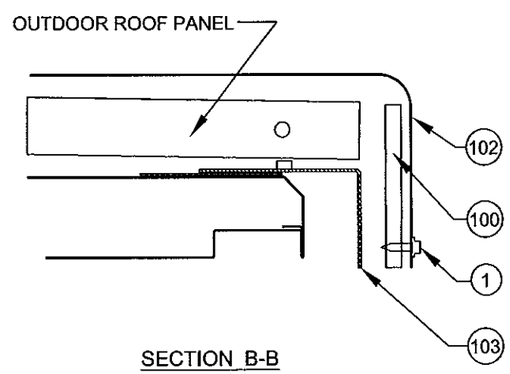

SECTION B-B

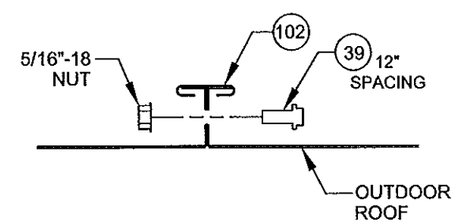

SECTION F-F

PRODUCT REVISED
as complying with the Florida
Building Code
Acceptance No 14-1120.13
Expiration Date 11/21/2018
By
Miami Dade Product Control

Approved as complying with the
Florida Building Code
Date 11/21/2013
NOA# 12-0629.02
Miami Dade Product Control
By

SCOTT WOLTERS
FL PE# 62354
WOLTERS ENGINEERING, INC.
(COA# 27194)
5358 SW 32ND TERRACE
FT. LAUDERDALE, FL 33312
NOV 06 2013

DRAWING #	DESC.		REV. HISTORY	BY:	REV.
AIRS0672	TRANE PERFORMANCE CLIMATE CHANGER AIR HANDLER - SIZE 50 STACKED UNIT	TRANE US Inc.	---	K.YUVARAJA	A
SHEET 21 OF 47 / SECTION			MOCK UPDWG SHEET REF: 30, 32-34 OF 63	SCALE: NTS	DATE 06-SEP-2013

BUILD GROUP / SHIPPING SPLIT CONSTRUCTION
DETAILS FOR STANDARD UNIT

NOTES:
1. GUSSETS ARE APPLIED ON 1ST LEVEL ONLY.

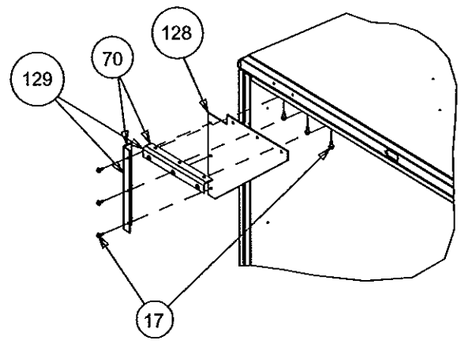

DETAIL A
GUSSET INSTALL

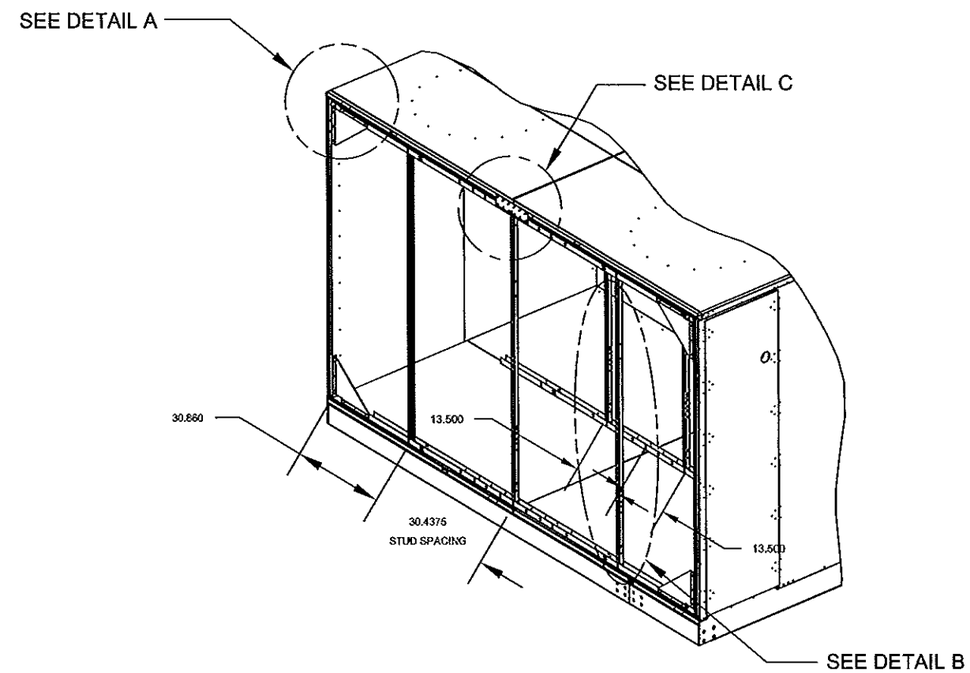

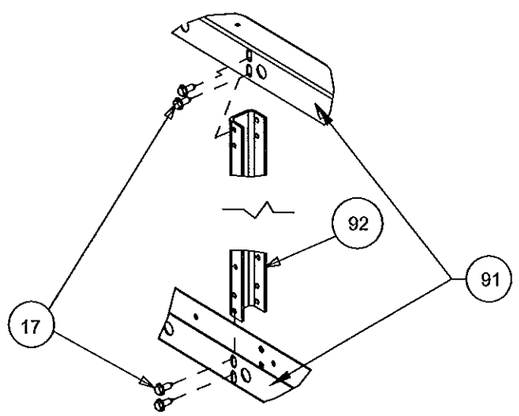

DETAIL B
SHIP SPLIT VERT. CHANNEL INSTALL

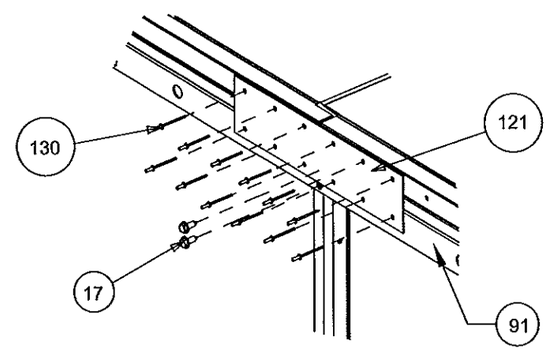

DETAIL C
SPLICE PLATE INSTALL
NOTE: APPLICABLE
TO 2ND LEVEL ONLY

Approved as complying with the
Florida Building Code
Date 11/21/2013
NOA# 13-0629.02
Miami Dade Product Control
By

PRODUCT REVISED
as complying with the Florida
Building Code
Acceptance No 14-1120.13
Expiration Date 11/21/2018
By
Miami Dade Product Control

SCOTT WOLTERS
FL PE# 62354
WOLTERS ENGINEERING, INC.
(COA# 27194)
5358 SW 32ND TERRACE
FT. LAUDERDALE, FL 33312
NOV 06 2013

DRAWING # AIRS0672		DESC. TRANE PERFORMANCE CLIMATE CHANGER AIR HANDLER - SIZE 50 STACKED UNIT	TRANE US Inc.	REV. HISTORY ---	BY: K.YUVARAJA	REV. A
SHEET 22 OF 47	SECTION			MOCK UPDWG SHEET REF: 41, 51 OF 63	SCALE: NTS	DATE 06-SEP-2013

BUILD GROUP/ SHIPPING SPLIT JOIN DETAILS AT THE BASE RAIL.

USE THREADED ROD TO PULL BUILD GROUPS TOGETHER (1ST LEVEL)

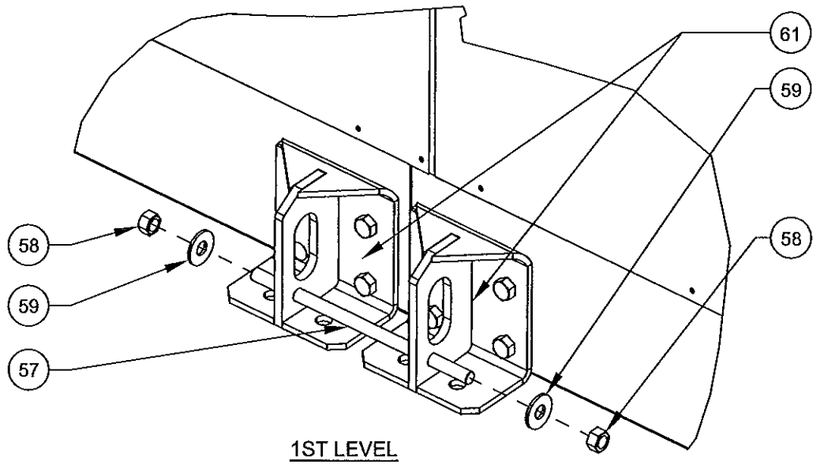

1ST LEVEL

REMOVE LUG FIXTURES AND INSTALL SPLICE PLATE TO HOLD THE BUILD GROUP BASES TOGETHER. IF A LUG IS REQUIRED AT THAT LOCATION, IT SHALL BE CENTERED ON THE SPLICE PLATE.

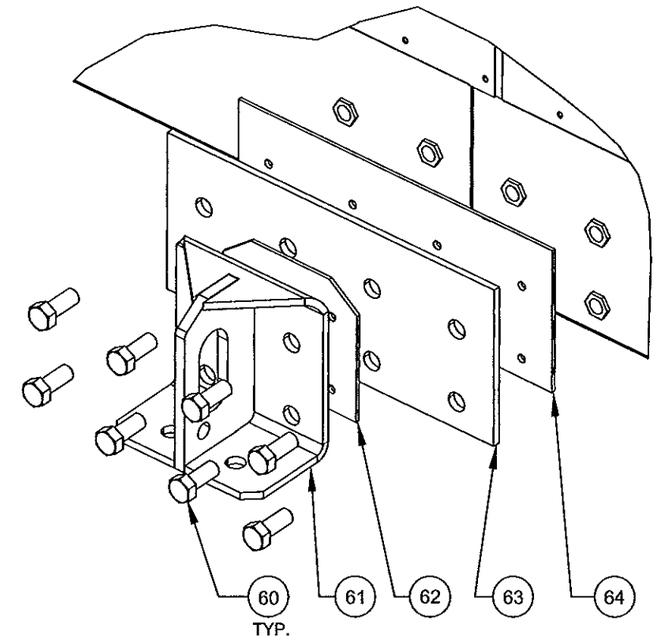

1ST LEVEL

NOTES:
1. SECTIONS / BUILDGROUPS PULLED TOGETHER WITH THREADED ROD.

2. IF NEEDED, THIS CAN BE WITH ITEM 63 OR LEAVE IT AS IS WITH THREADED ROD.

3. FOR 2ND LEVEL, THE THREADED BOLT IS USED TO PULL THE SECTION / BUILD GROUPS TOGETHER AND ONCE FASTENED TOGETHER, THE LIFITING LUGS 68 CAN BE REPLACED BY ITEM 41. SEE THAT ATTACHMENT DETAIL H ON THIS SHEET.

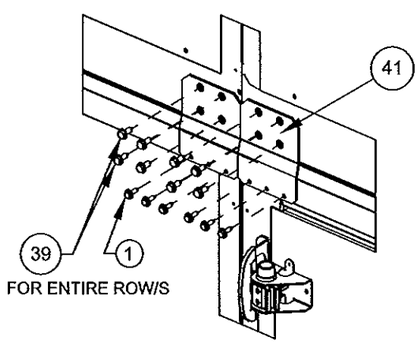

DETAIL H. STACKED UNIT BRACKET AT SHIPPING SPLIT DETAIL

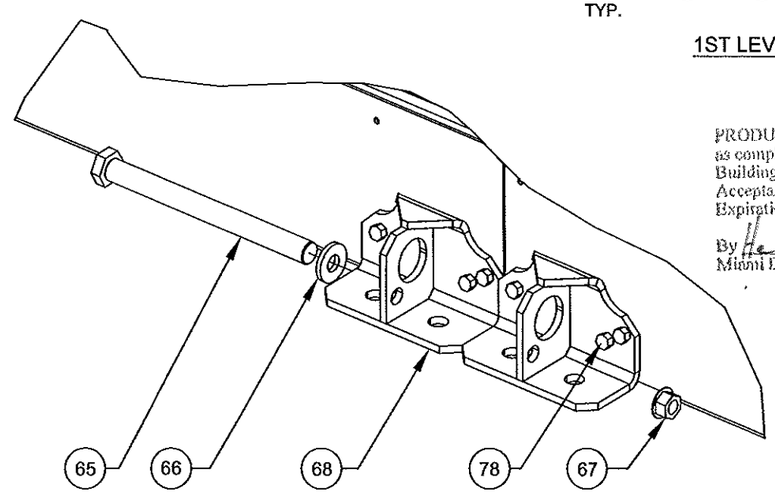

USE HEX MACHINE BOLT TO PULL BUILD GROUPS TOGETHER (2ND LEVEL)

PRODUCT REVISED
as complying with the Florida Building Code
Acceptance No 14-1120.13
Expiration Date 11/21/2018
By
Miami Dade Product Control

Approved as complying with the Florida Building Code
Date 11/21/2013
NOA# 12-0629.02
Miami Dade Product Control
By

SCOTT WOLTERS
FL PE# 62354
WOLTERS ENGINEERING, INC.
(COA# 27194)
5358 SW 32ND TERRACE
FT. LAUDERDALE, FL 33312
NOV 06 2013

DRAWING #	DESC.		REV. HISTORY	BY:	REV.
AIRS0672	TRANE PERFORMANCE CLIMATE CHANGER AIR HANDLER - SIZE 50 STACKED UNIT	TRANE US Inc.	---	K.YUVARAJA	A
SHEET 23 OF 47 / SECTION			MOCK UPDWG SHEET REF: 28, 52 OF 63	SCALE: NTS	DATE 06-SEP-2013

HOOD ATTACHMENT FEATURES

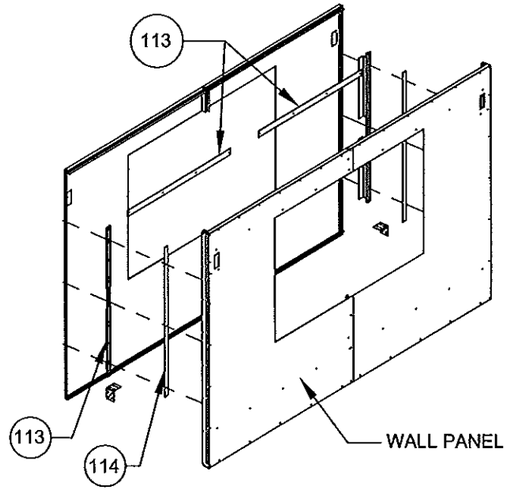

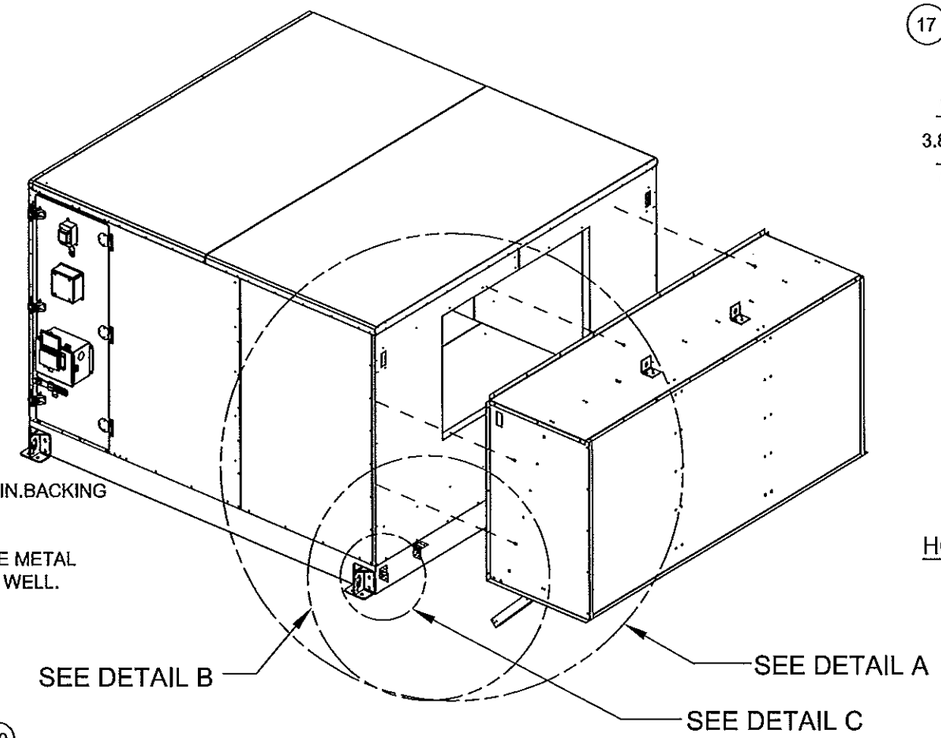

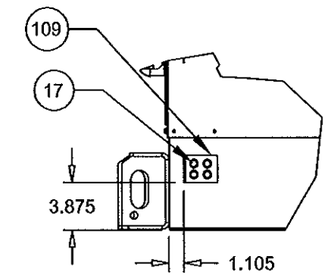

DETAIL C

HOOD ATTACHMENT

NOTES:
1. BACKING PLATE IN WALL PANEL ATTACHED WITH DOUBLE SIDED TAPE TO THE OUTER SKIN.BACKING PLATE AND WALL ANCHOR LOCATED IN THE PANEL MATCHING THE HOOD PERIMETER.

2. THE L ANGLES (ITEM 110) IN HOODS ARE SANDWICHED BETWEEN THE A FRAMES AND THE METAL SKINS. ADHESIVE (ITEM 70) IS APPLIED BETWEEN THE ANGLES AND THE METAL SKINS AS WELL.

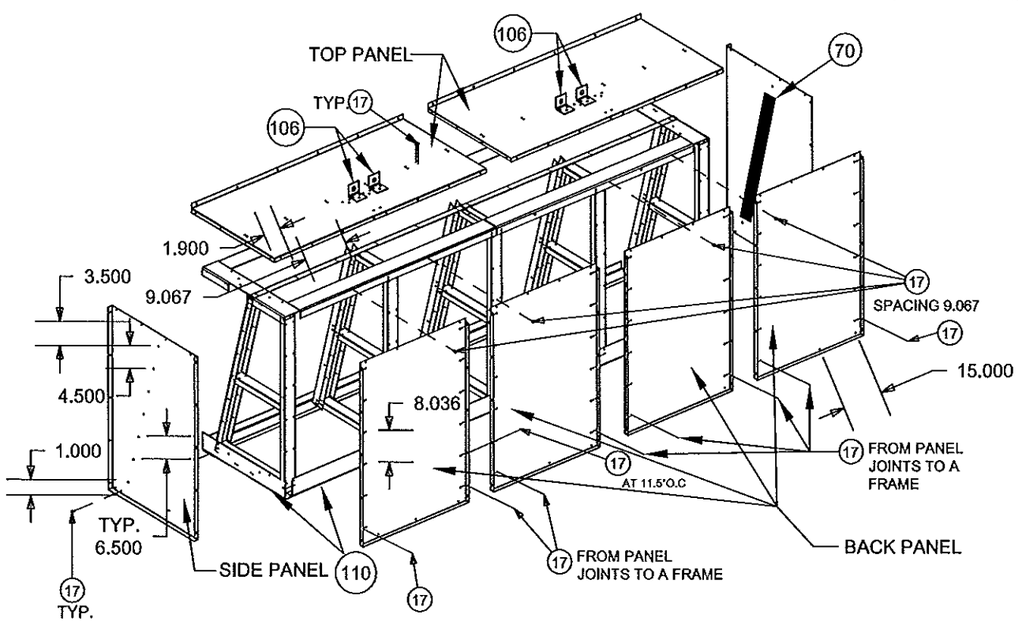

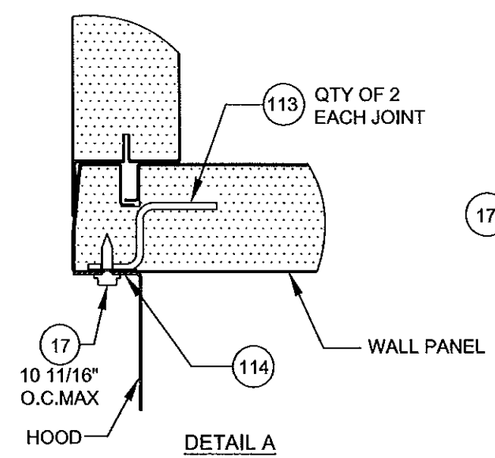

DETAIL A

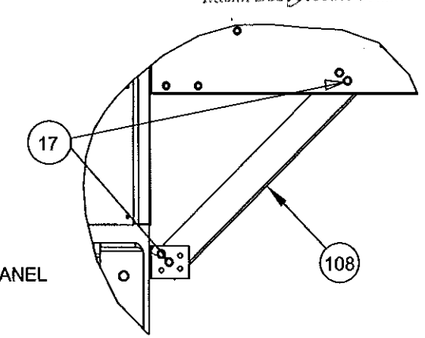

DETAIL B

FRONT/BACK HOODS ONLY

PRODUCT REVISED
as complying with the Florida Building Code
Acceptance No 14-1120.13
Expiration Date 11/21/2018
By
Miami Dade Product Control

Approved as complying with the Florida Building Code
Date 11/21/2013
NOA# 12-0629.02
Miami Dade Product Control
By

SCOTT WOLTERS
FL PE# 62354
WOLTERS ENGINEERING, INC.
(COA# 27194)
5358 SW 32ND TERRACE
FT. LAUDERDALE, FL 33312
NOV 06 2013

DRAWING #	DESC.		REV. HISTORY	BY:	REV.
AIRS0672	TRANE PERFORMANCE CLIMATE CHANGER AIR HANDLER - SIZE 50 STACKED UNIT	TRANE US Inc.	---	K.YUVARAJA	A
SHEET 24 OF 47 / SECTION			MOCK UPDWG SHEET REF: 48, 50 OF 63	SCALE: NTS	DATE 06-SEP-2013

HOOD ASSEMBLY DETAILS

NOTES:
1. SEE TABLE FOR MAX HOOD SIZES.
2. ALL METAL SKINS ARE ATTACHED WITH 1/4" SCREWS.
3. ALL A-FRAME PARTS ARE ASSEMBLED WITH ITEM 17.
4. ITEM 110 ATTACHED TO THE SIDE HOOD BOTTOM PANEL WITH ITEM 17 AT 12" O.C.
5. ITEM 110 ATTACHED TO THE BACK/FRONT HOOD BOTTOM PANEL WITH SCREWS AT 24 " SPACING.

HOOD DESCRIPTION	LENGTH	WIDTH	HEIGHT
BACK/FRONT HOOD	125 15/32"	29.5"	47.5"
SIDE HOOD	38 5/8"	39 5/8"	66.25"

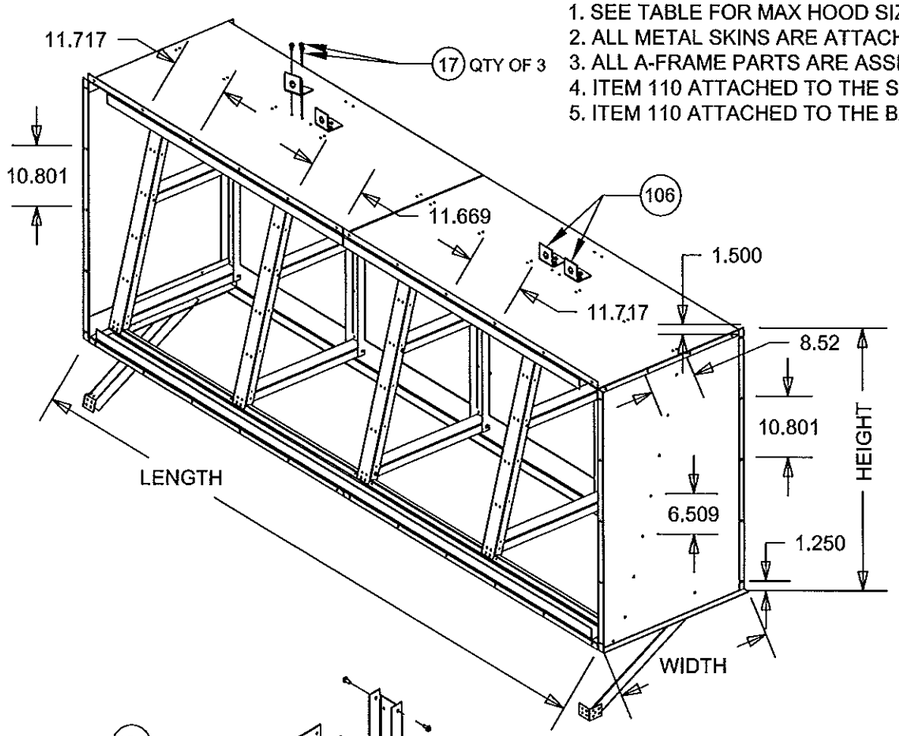

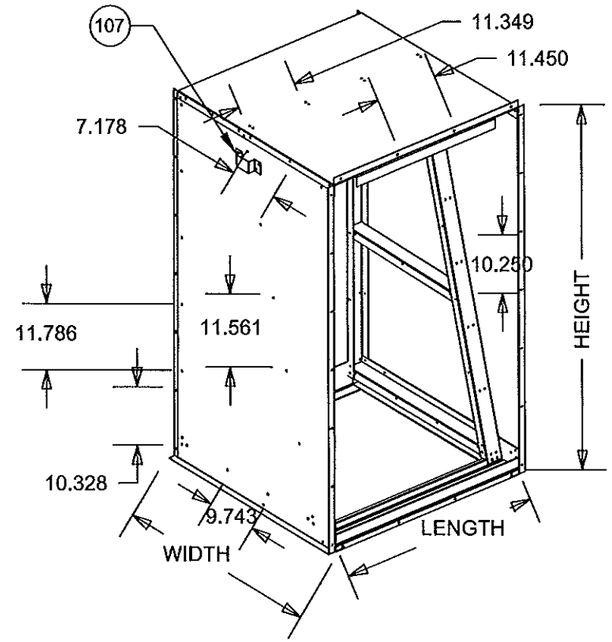

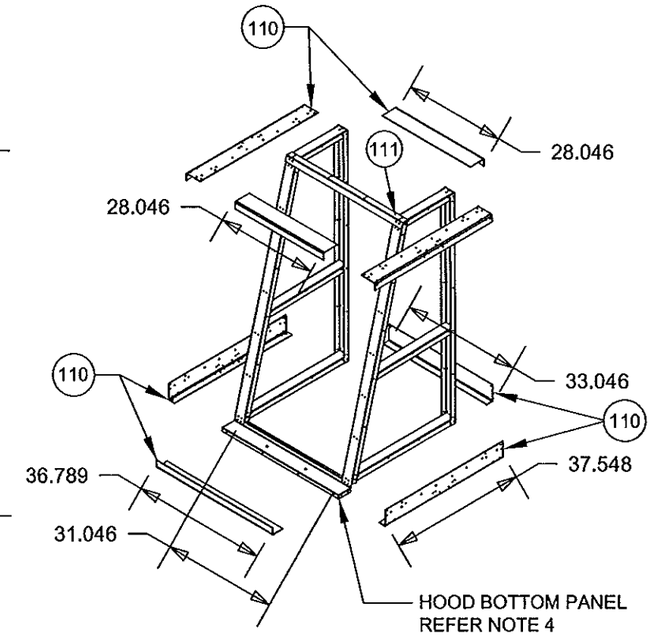

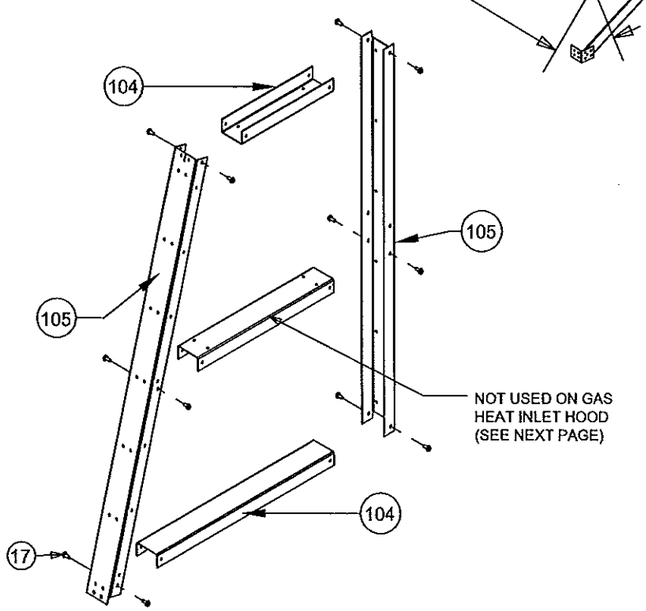

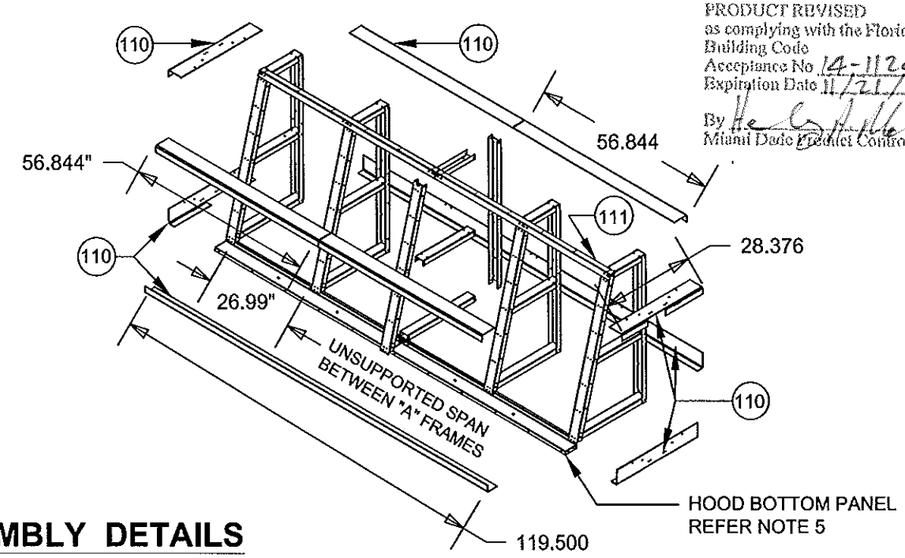

PRODUCT REVISED
as complying with the Florida
Building Code
Acceptance No 14-1120.13
Expiration Date 11/21/2018
By
Miami Dade Product Control

Approved as complying with the
Florida Building Code
Date 11/21/2013
NOA# 12-0629.02
Miami Dade Product Control
By

SCOTT WOLTERS
FL PE# 62354
WOLTERS ENGINEERING, INC.
(COA# 27194)
5358 SW 32ND TERRACE
FT. LAUDERDALE, FL 33312
NOV 06 2013

HOOD ASSEMBLY DETAILS

DRAWING #	DESC.		REV. HISTORY	BY:	REV.
AIRS0672	TRANE PERFORMANCE CLIMATE CHANGER AIR HANDLER - SIZE 50 STACKED UNIT	TRANE US Inc.	---	K.YUVARAJA	A
SHEET 25 OF 47 / SECTION			MOCK UPDWG SHEET REF: 43-46 OF 63	SCALE: NTS	DATE 06-SEP-2013

GAS HEAT INTAKE HOOD ASSEMBLY DETAILS

NOTES:
1. SKINS ARE ADHERED WITH STRUCTURAL GLUE.
2. ALL METAL SKINS ARE ATTACHED WITH 1/4" SCREWS.
3. ALL A-FRAME PARTS ARE ASSEMBLED WITH ITEM 17.
4. NO BACKING PLATE REQUIRED WHEN INLET IS ATTACHED TO DOOR.
5. NO ITEM 110 (L ANGLE) USED FOR THIS HOOD.

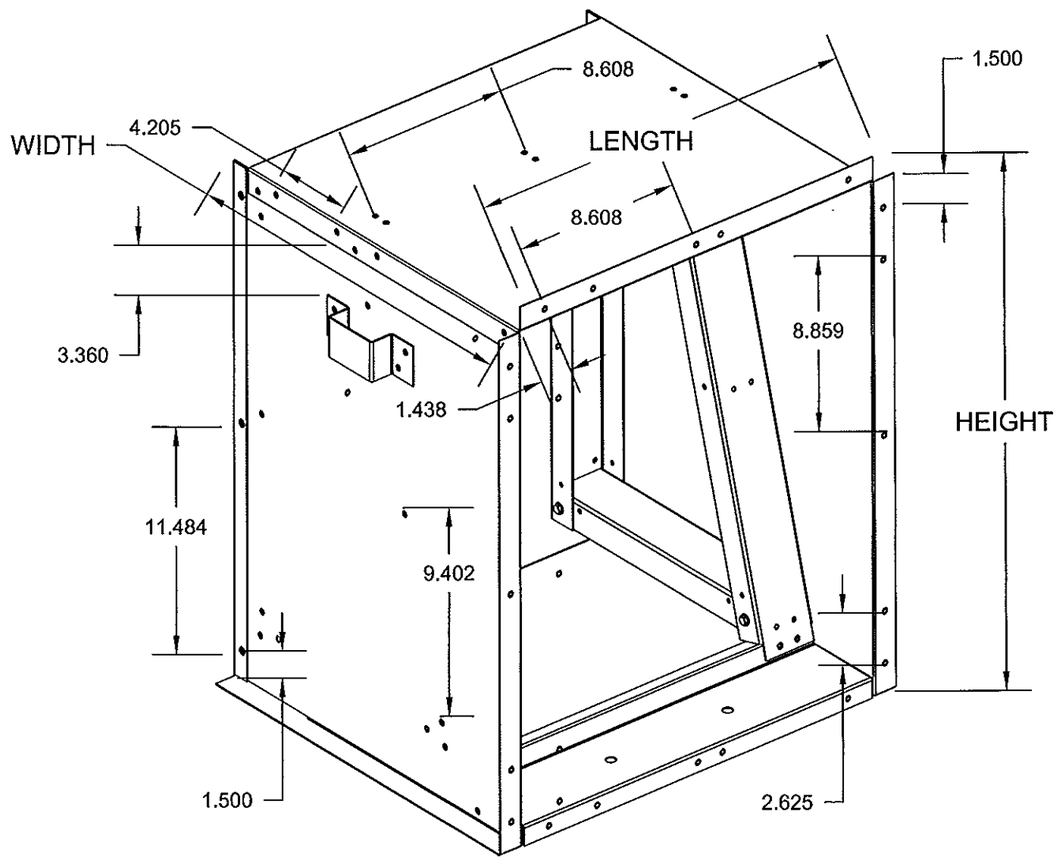

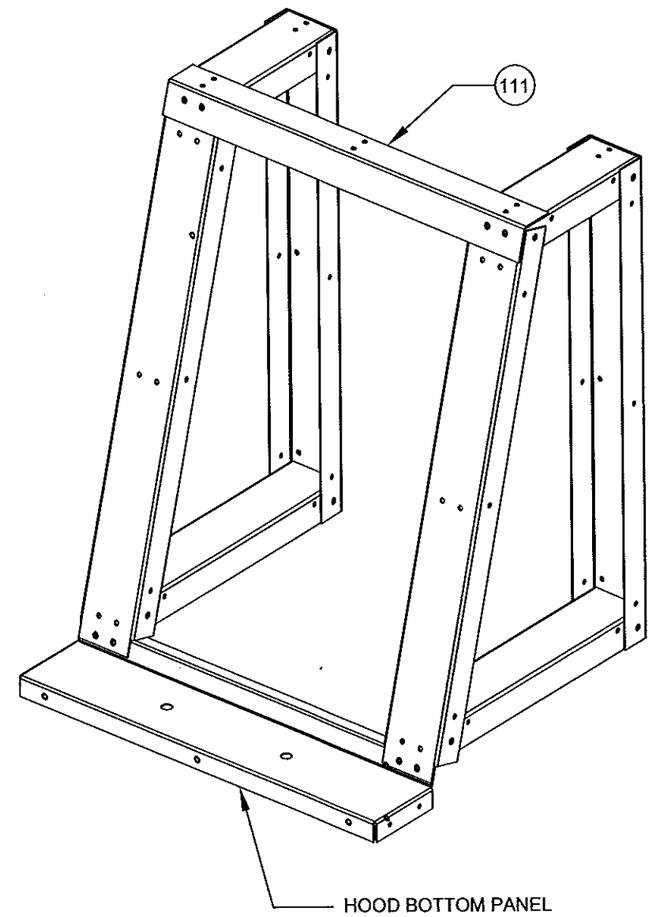

A FRAME ASSEMBLY

HOOD DESCRIPTION	LENGTH	WIDTH	HEIGHT
GAS HEAT INLET HOOD	22.780"	19.646"	27.250"

PRODUCT REVISED
as complying with the Florida
Building Code
Acceptance No 14-1120.13
Expiration Date 11/21/2018
By
Miami Dade Product Control

Approved as complying with the
Florida Building Code
Date 11/21/2013
NOA# 12-0629.02
Miami Dade Product Control
By

SCOTT WOLTERS
FL PE# 62354
WOLTERS ENGINEERING, INC.
(COA# 27194)
5358 SW 32ND TERRACE
FT. LAUDERDALE, FL 33312
NOV 0 7 2013

DRAWING #	DESC.		REV. HISTORY	BY:	REV.
AIRS0672	TRANE PERFORMANCE CLIMATE CHANGER AIR HANDLER - SIZE 50 STACKED UNIT	TRANE US Inc.	---	K.YUVARAJA	A
SHEET 26 OF 47 / SECTION			MOCK UPDWG SHEET REF: 47 OF 63	SCALE: NTS	DATE 06-SEP-2013

PIPE CABINET

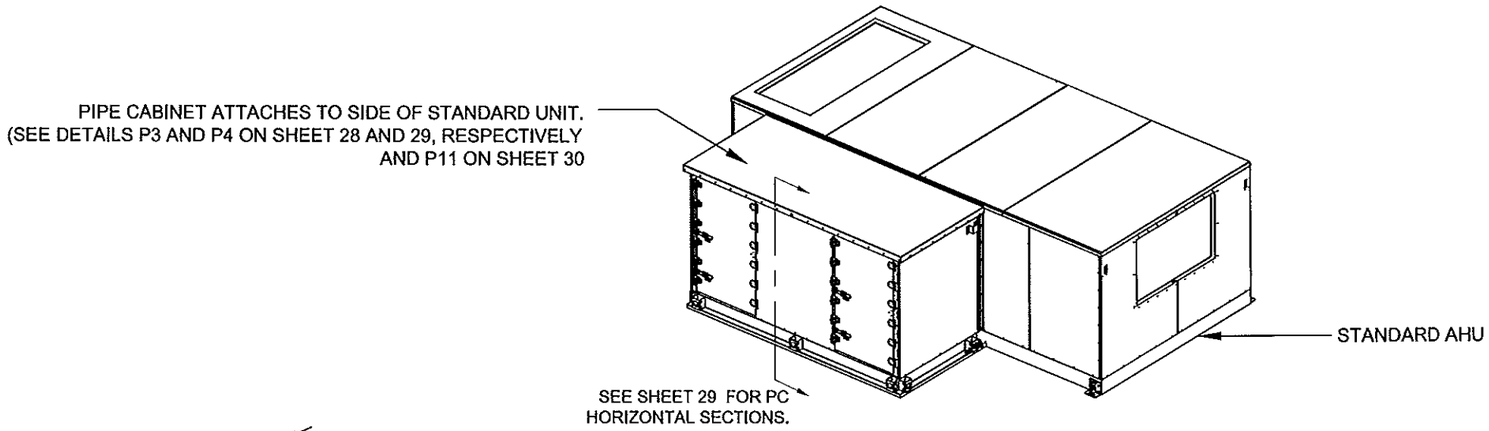

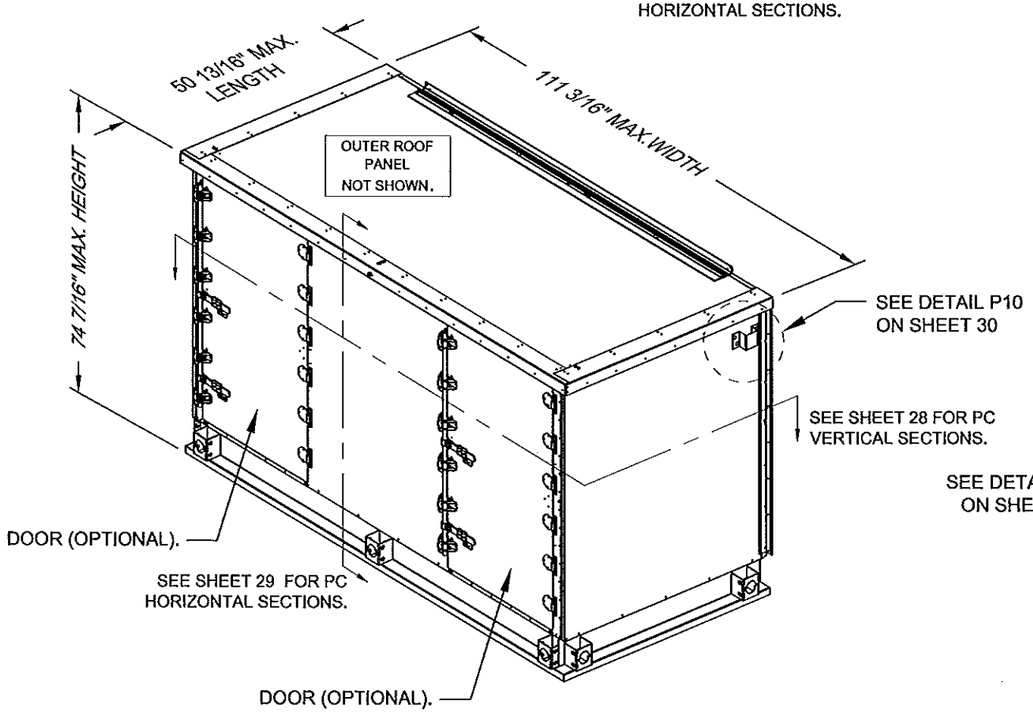

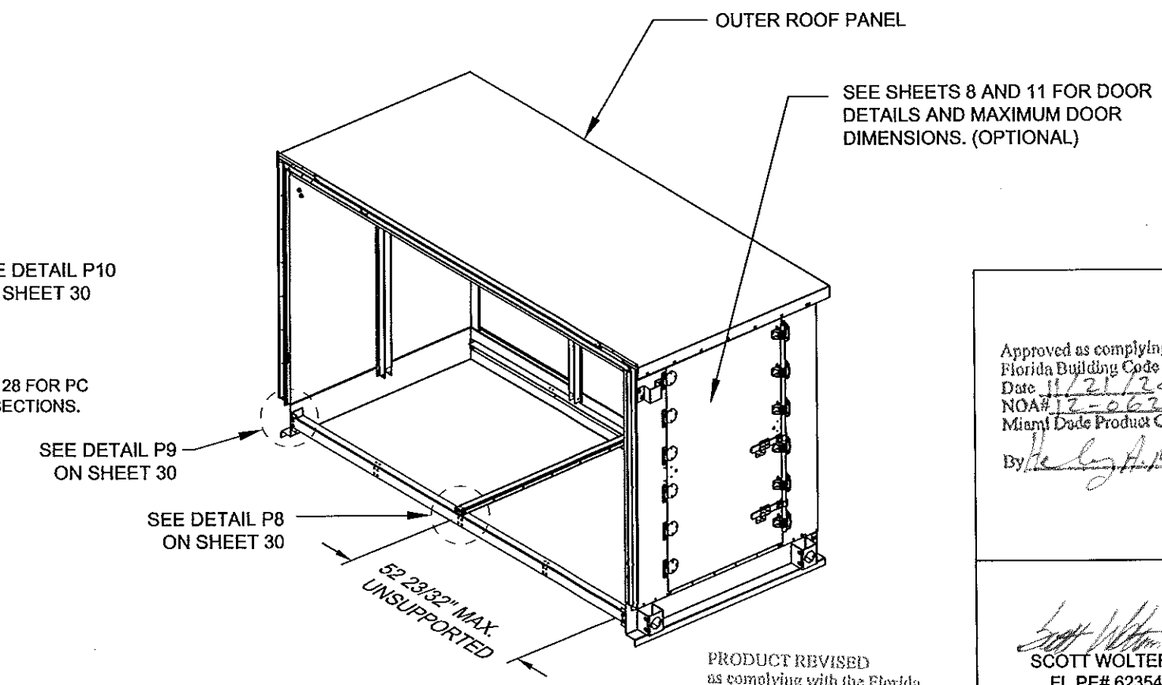

Approved as complying with the Florida Building Code
Date 11/21/2013
NOA# 12-0629.02
Miami Dade Product Control
By

PRODUCT REVISED
as complying with the Florida Building Code
Acceptance No 14-1120.13
Expiration Date 11/21/2018
By
Miami Dade Product Control

SCOTT WOLTERS
FL PE# 62354
WOLTERS ENGINEERING, INC.
(COA# 27194)
5358 SW 32ND TERRACE
FT. LAUDERDALE, FL 33312
NOV 15 2013

DRAWING #	DESC.		REV. HISTORY	BY:	REV.
AIRS0672	TRANE PERFORMANCE CLIMATE CHANGER AIR HANDLER - SIZE 50 STACKED UNIT	TRANE US Inc.	---	K.YUVARAJA	A
SHEET 27 OF 47 / SECTION			MOCK UPDWG SHEET REF: 2, 4, 5 OF 19	SCALE: NTS	DATE 06-SEP-2013

PIPE CABINET DETAILS

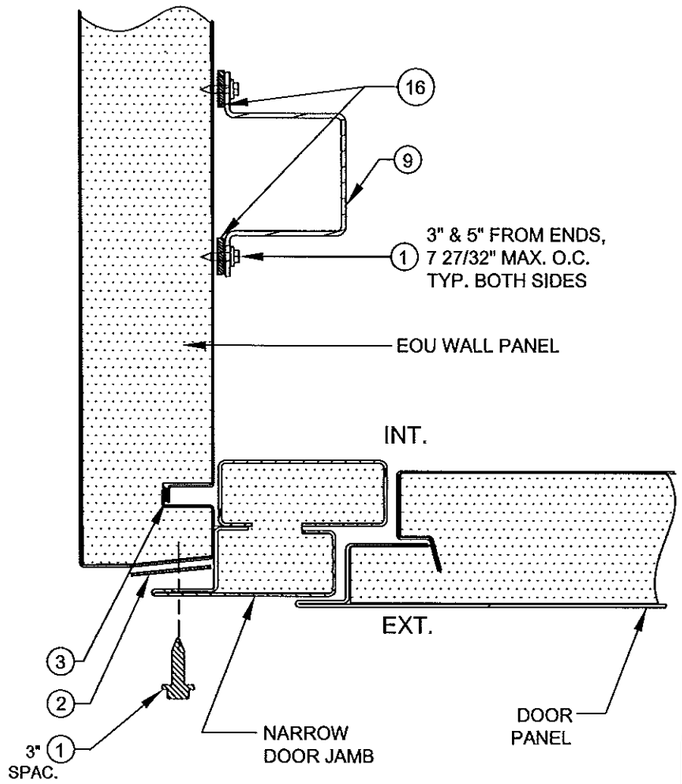

DETAIL P1. DOOR TO EOU

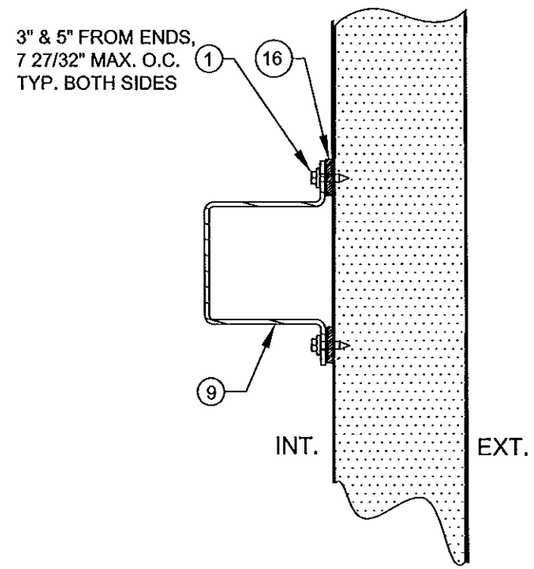

DETAIL P2. HAT CHANNEL TO WALL

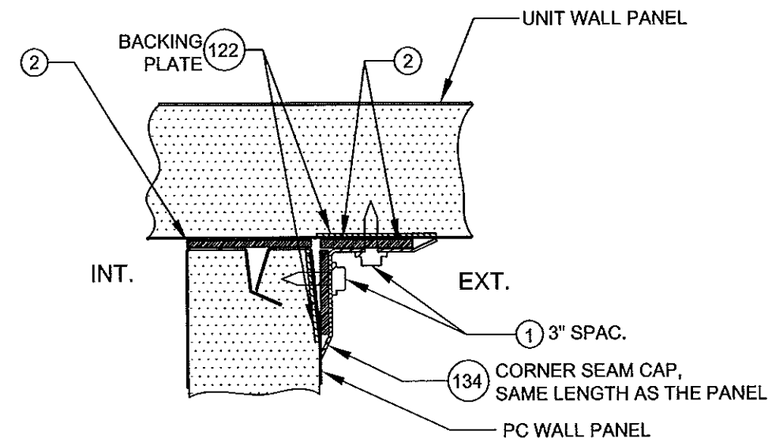

DETAIL P3. PC WALL TO UNIT WALL

TOP VIEW

PRODUCT REVISED
as complying with the Florida
Building Code
Acceptance No 14-1120.13
Expiration Date 11/21/2018
By
Miami Dade Product Control

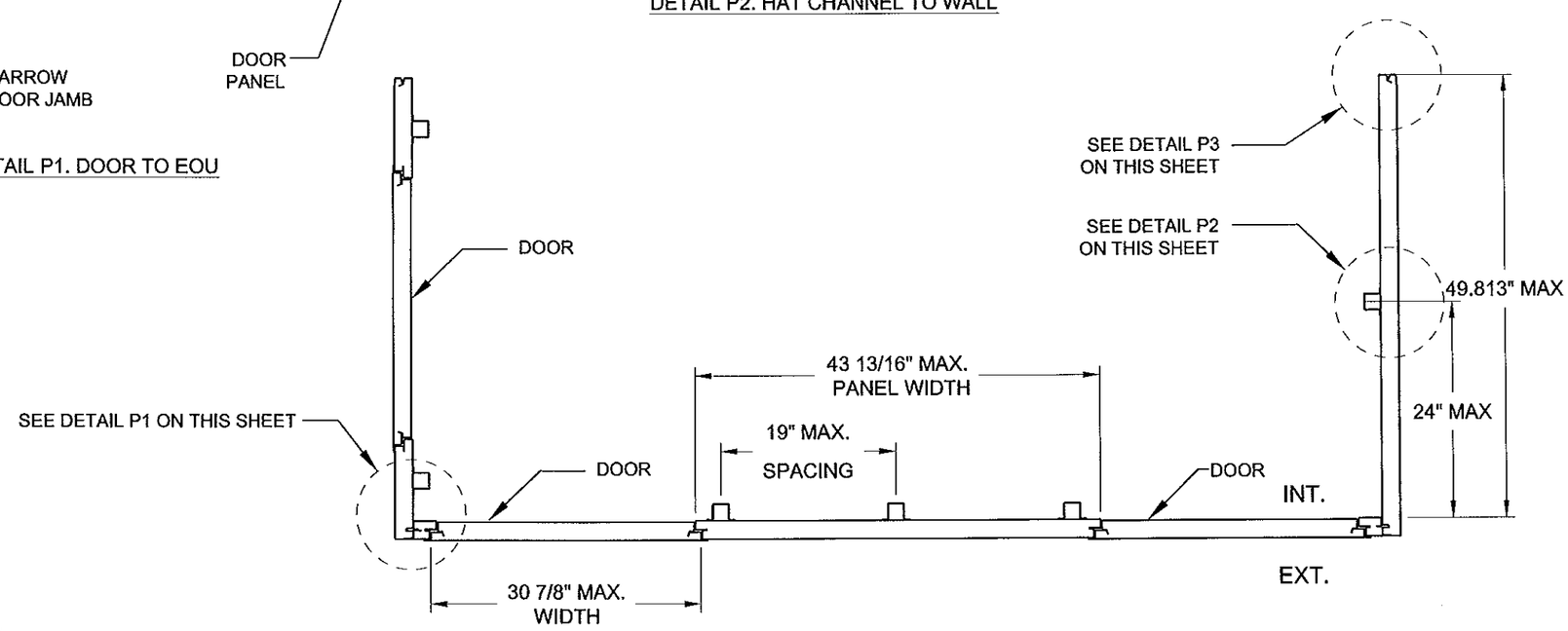

NOTES:
1. DOORS ARE OPTIONAL .

PC VERTICAL SECTIONS

Approved as complying with the
Florida Building Code
Date 11/21/2013
NOA# 12-0629.02
Miami Dade Product Control
By

SCOTT WOLTERS
FL PE# 62354
WOLTERS ENGINEERING, INC.
(COA# 27194)
5358 SW 32ND TERRACE
FT. LAUDERDALE, FL 33312
NOV 06 2013

DRAWING # AIRS0672	DESC. TRANE PERFORMANCE CLIMATE CHANGER AIR HANDLER - SIZE 50 STACKED UNIT	TRANE US Inc.	REV. HISTORY ---	BY: K.YUVARAJA	REV. A
SHEET 28 OF 47 / SECTION			MOCK UPDWG SHEET REF: 3, 7 OF 19	SCALE: NTS	DATE 06-SEP-2013

PIPE CABINET DETAILS

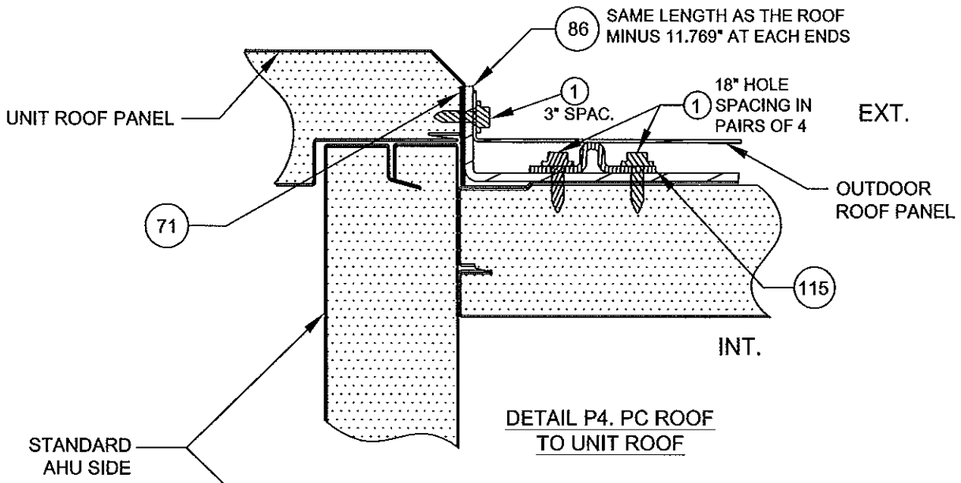

DETAIL P4. PC ROOF TO UNIT ROOF

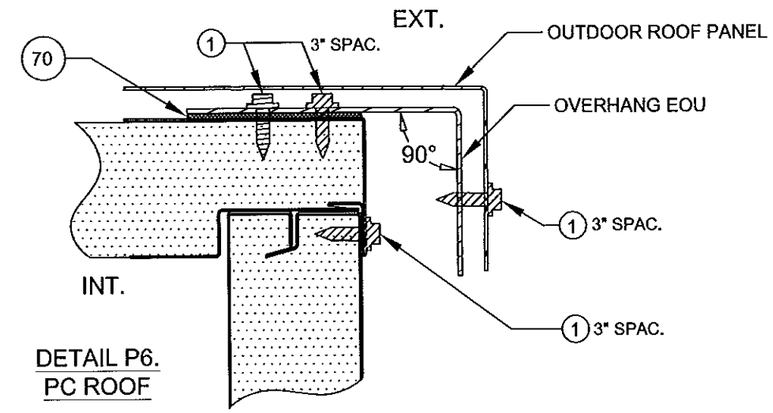

DETAIL P6. PC ROOF

STANDARD AHU SIDE

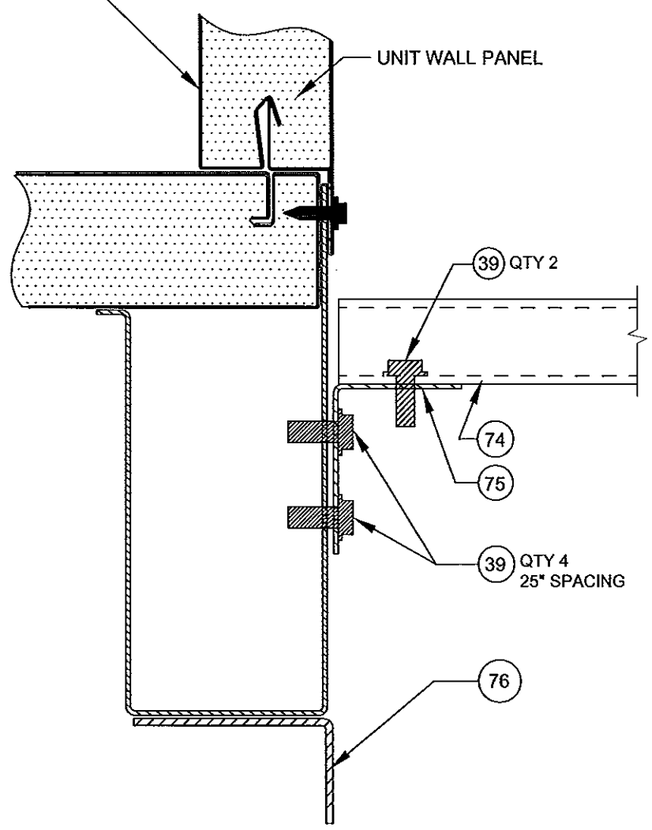

DETAIL P5. PC TO UNIT BASE

PC HORIZONTAL SECTIONS

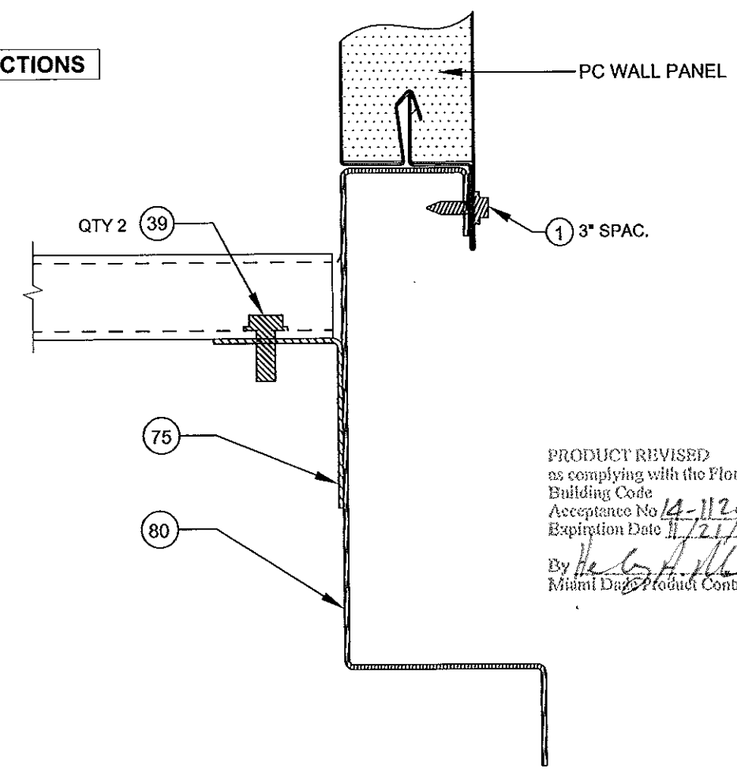

DETAIL P7. PC BASE

Approved as complying with the Florida Building Code
Date 11/21/2013
NOA# 13-0629.02
Miami Dade Product Control
By

PRODUCT REVISED
as complying with the Florida Building Code
Acceptance No 14-1120.13
Expiration Date 11/21/2018
By
Miami Dade Product Control

SCOTT WOLTERS
FL PE# 62354
WOLTERS ENGINEERING, INC.
(COA# 27194)
5358 SW 32ND TERRACE
FT. LAUDERDALE, FL 33312

NOV 06 2013

DRAWING #	DESC.		REV. HISTORY	BY:	REV.
AIRS0672	TRANE PERFORMANCE CLIMATE CHANGER AIR HANDLER - SIZE 50 STACKED UNIT	TRANE US Inc.	---	K.YUVARAJA	A
SHEET 29 OF 47 / SECTION			MOCK UPDWG SHEET REF: 4, 11-13 OF 19	SCALE: NTS	DATE 06-SEP-2013

PIPE CABINET DETAILS

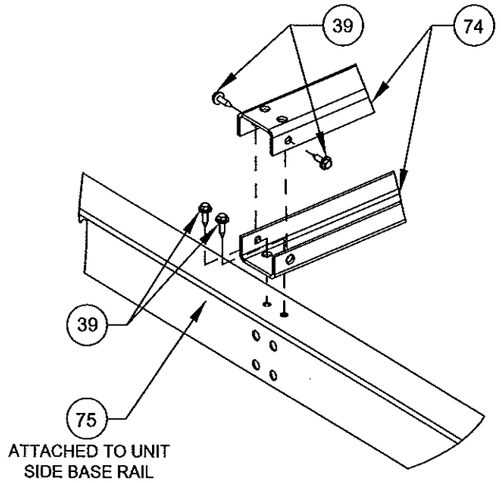

DETAIL P8. MULLION ASSEMBLY ATTACHMENT

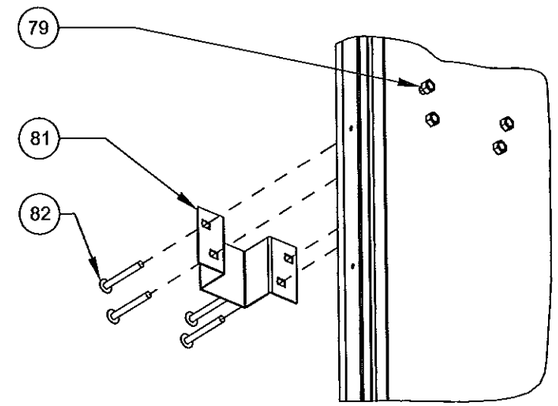

DETAIL P10. CHAIN GUIDE/GUARD ATTACHMENT

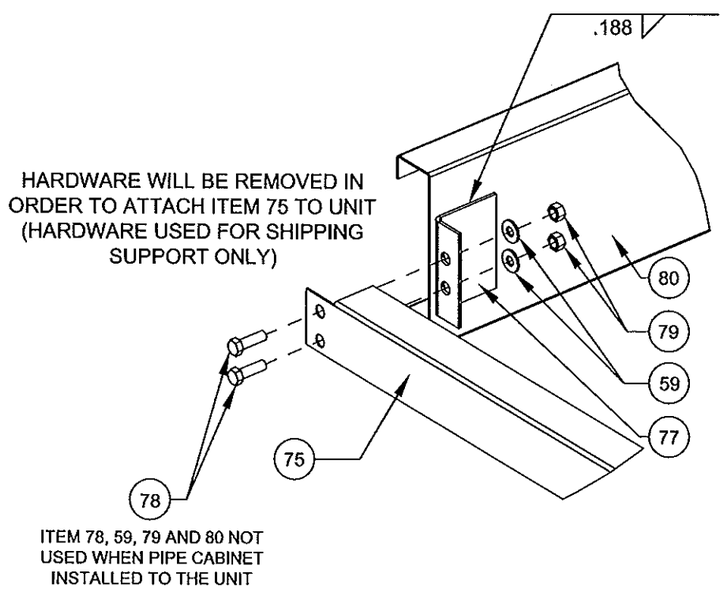

DETAIL P9. SHIPPING CORNER

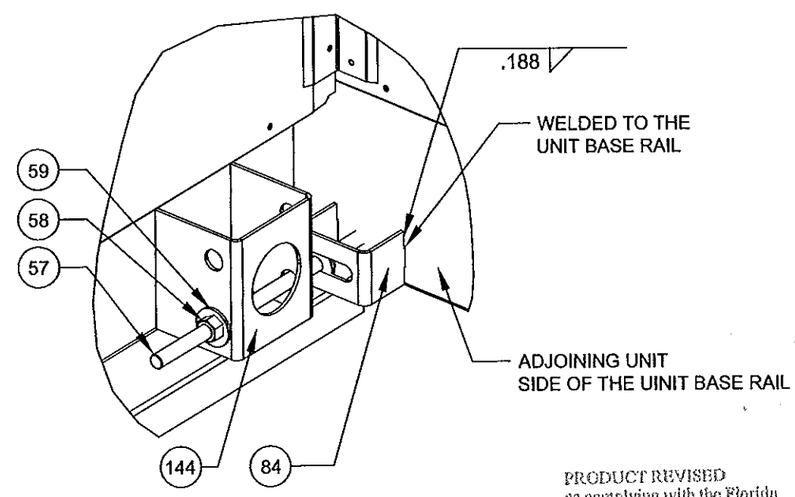

DETAIL P11. LUG CONNECTION

Approved as complying with the
Florida Building Code
Date 11/21/2013
NOA# 12-0629.02
Miami Dade Product Control
By

PRODUCT REVISED
as complying with the Florida
Building Code
Acceptance No 14-1120.13
Expiration Date 11/21/2018
By
Miami Dade Product Control

SCOTT WOLTERS
FL PE# 62354
WOLTERS ENGINEERING, INC.
(COA# 27194)
5358 SW 32ND TERRACE
FT. LAUDERDALE, FL 33312

NOV 06 2013

DRAWING #	DESC.		REV. HISTORY	BY:	REV.
AIRS0672	TRANE PERFORMANCE CLIMATE CHANGER AIR HANDLER - SIZE 50 STACKED UNIT	TRANE US Inc.	---	K.YUVARAJA	A
SHEET 30 OF 47 / SECTION			MOCK UPDWG SHEET REF: 3, 6 OF 19	SCALE: NTS	DATE 06-SEP-2013

GAS HEAT FLUE DUCT DETAILS

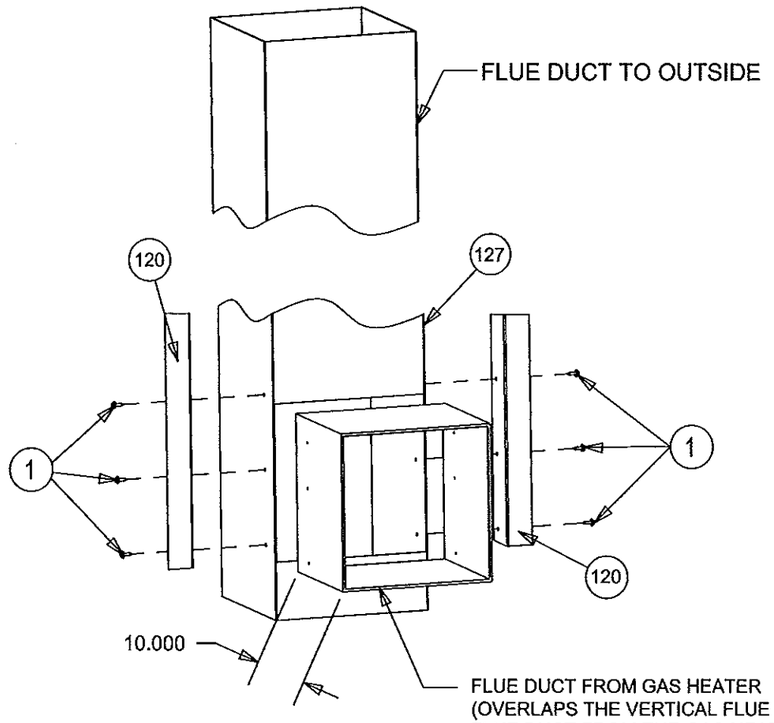

FLUE DUCT FROM GAS HEATER
(OVERLAPS THE VERTICAL FLUE DUCT BY 4")
FLUE DUCT FROM THE GAS HEATER COMES FROM INSIDE THE UNIT
AND IT IS ATTACHED TO THE VERTICAL FLUE DUCT. ITEM 120
ATTACHED TO THE FLUE DUCT AND THE UNIT SIDE WALL.

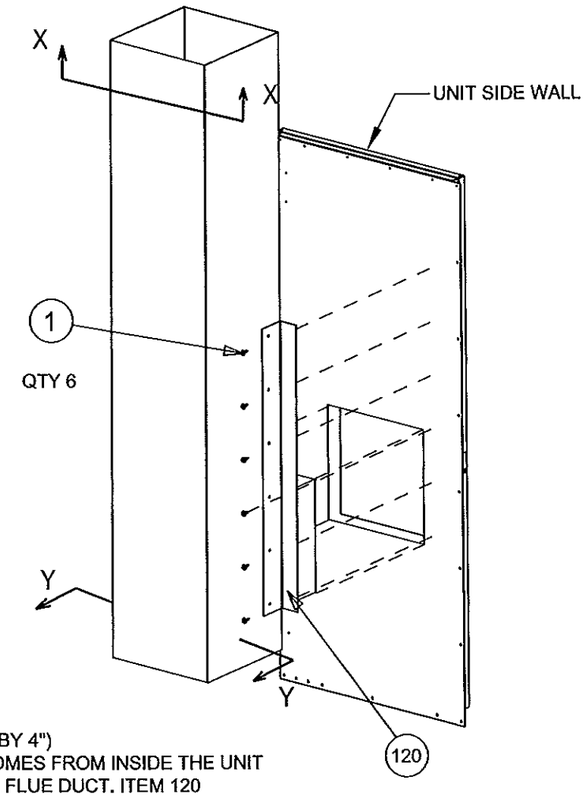

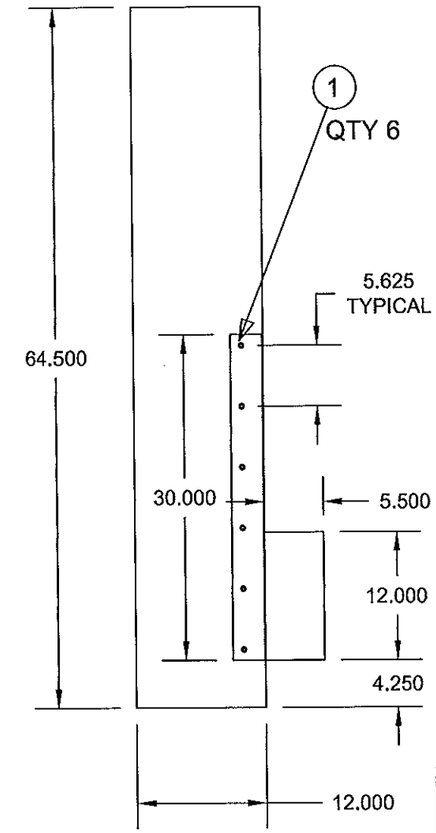

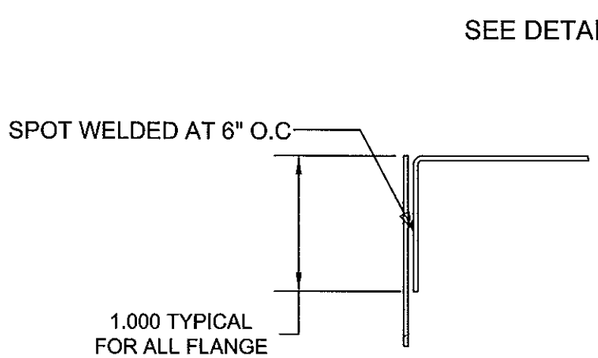

DETAIL A

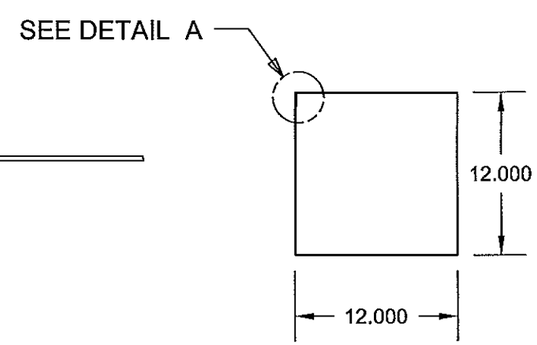

SECTION X-X

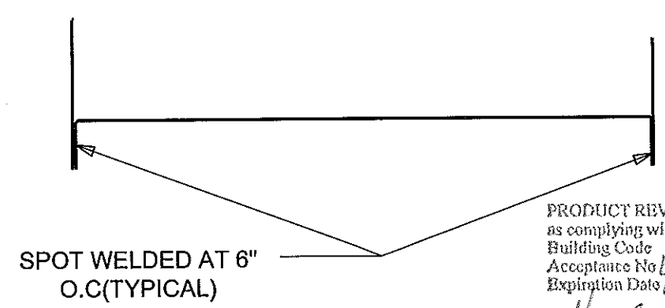

SECTION Y-Y

Approved as complying with the Florida Building Code
Date 11/21/2013
NOA# 12-0629.02
Miami Dade Product Control
By

PRODUCT REVISED
as complying with the Florida Building Code
Acceptance No 14-1120.13
Expiration Date 11/21/2018
By
Miami Dade Product Control

SCOTT WOLTERS
FL PE# 62354
WOLTERS ENGINEERING, INC.
(COA# 27194)
5358 SW 32ND TERRACE
FT. LAUDERDALE, FL 33312

NOV 06 2013

DRAWING # AIRS0672		DESC. TRANE PERFORMANCE CLIMATE CHANGER AIR HANDLER - SIZE 50 STACKED UNIT	TRANE US Inc.	REV. HISTORY ---	BY: K.YUVARAJA	REV. A
SHEET 31 OF 47	SECTION			MOCK UPDWG SHEET REF: 21 OF 63	SCALE: NTS	DATE 06-SEP-2013

ENERGY WHEEL SECTION

NOTES:
1. THIS ENERGY WHEEL SECTION IS COMMONLY REFERENCED AS 2-LEVEL SECTION, THUS THE INTERNAL COMPONENTS ARE NOT LIMITED TO ENERGY WHEEL APPLICATION PROVIDED THAT EXTERNAL STRUCTURE IS AS INDICATED HERE.

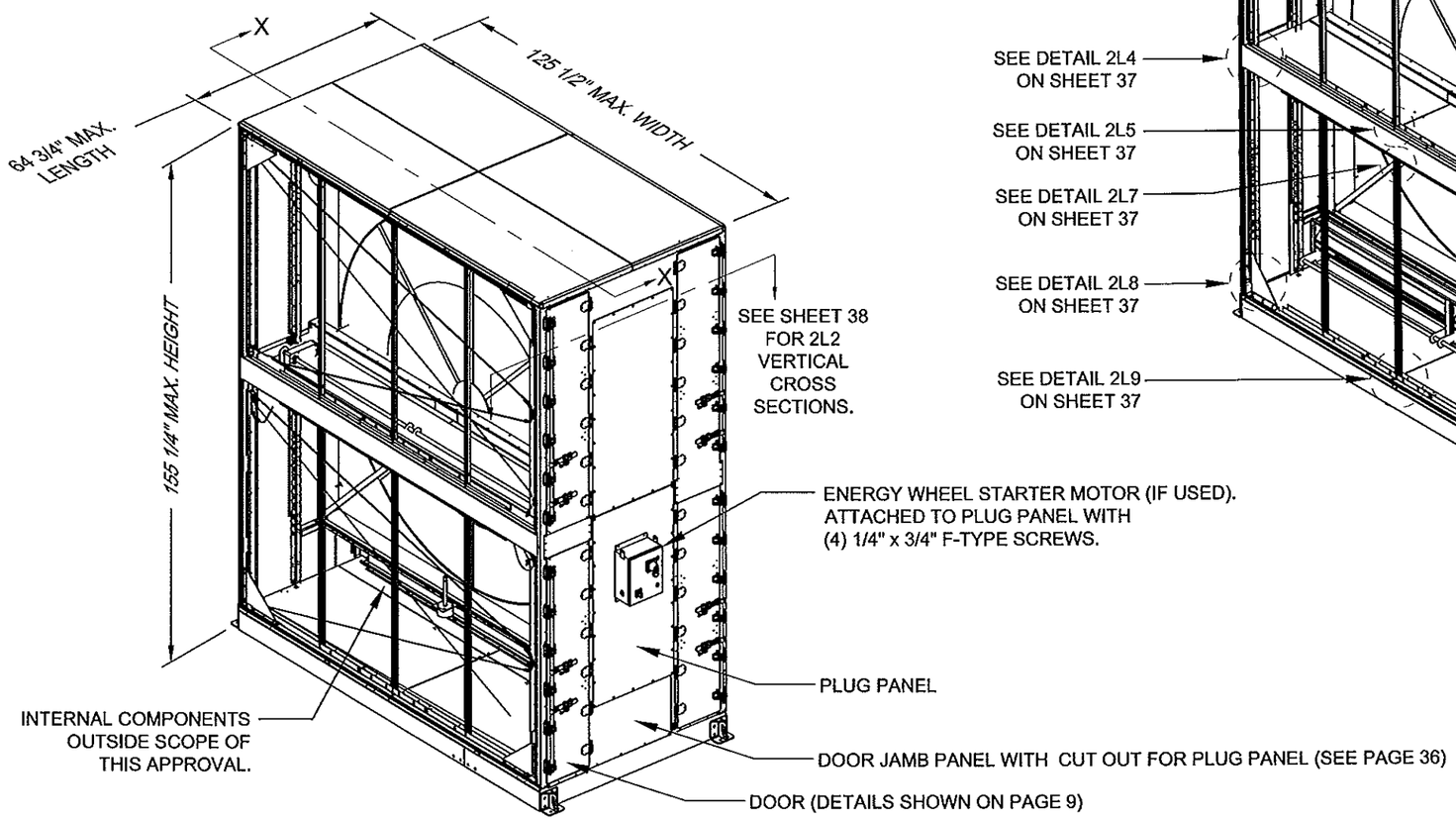

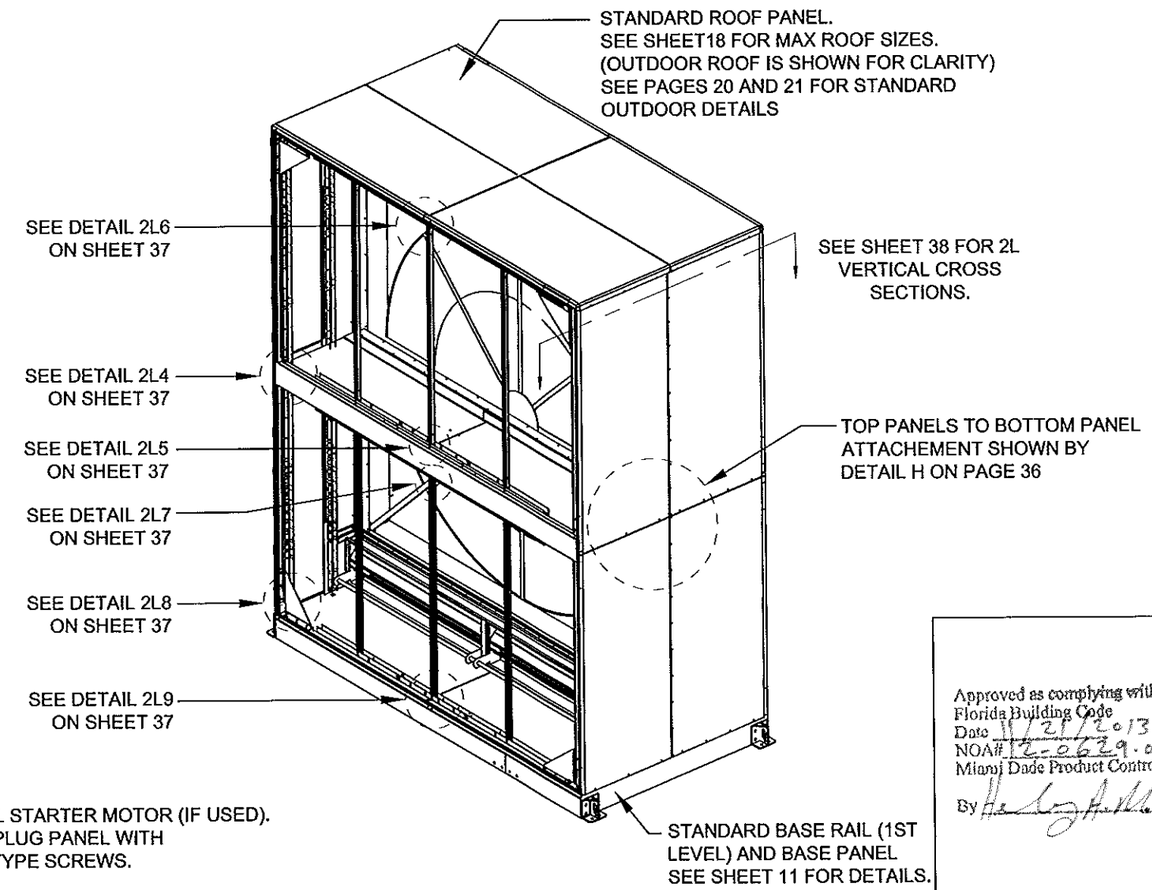

Approved as complying with the Florida Building Code
Date 11/21/2013
NOA# 12-0629.02
Miami Dade Product Control
By

PRODUCT REVISED
as complying with the Florida Building Code
Acceptance No 14-1120.13
Expiration Date 11/21/2018
By
Miami Dade Product Control

SCOTT WOLTERS
FL PE# 62354
WOLTERS ENGINEERING, INC.
(COA# 27194)
5358 SW 32ND TERRACE
FT. LAUDERDALE, FL 33312
NOV 06 2013

DRAWING #	DESC.		REV. HISTORY	BY:	REV.
AIRS0672	TRANE PERFORMANCE CLIMATE CHANGER AIR HANDLER - SIZE 50 STACKED UNIT	TRANE US Inc.	---	K.YUVARAJA	A
SHEET 32 OF 47 / SECTION			MOCK UPDWG SHEET REF: 3 OF 35	SCALE: NTS	DATE 06-SEP-2013

ENERGY WHEEL SIDE WALL DETAILS
(Vertical cross sections with internal supports)

NOTES:
1. HERE WE ARE SHOWING VERTICAL CROSS SECTIONS (TOP VIEW) TO SHOW THE PANEL IN WIDTH AND VERTICAL CHANNEL ATTACHMENT TO SLIP FIT CHANNEL AND TO SIDE WALL.

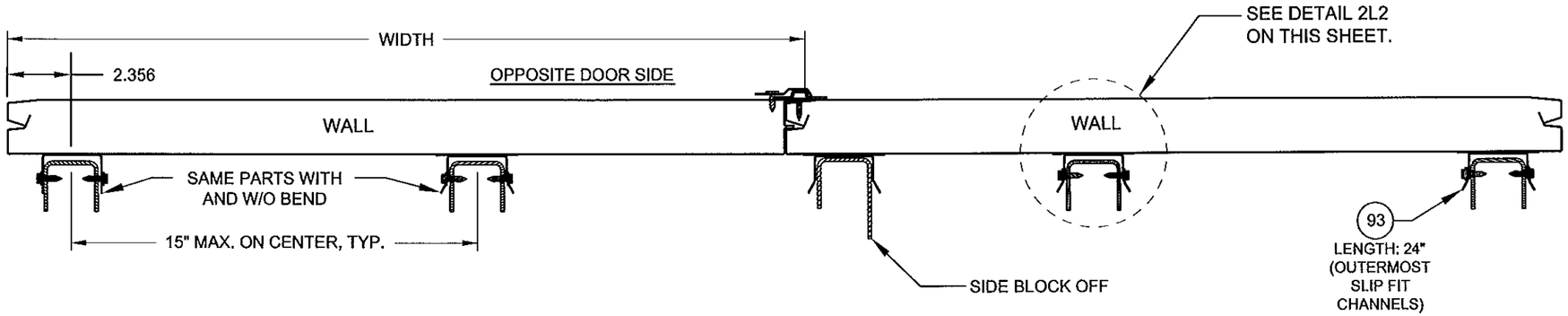

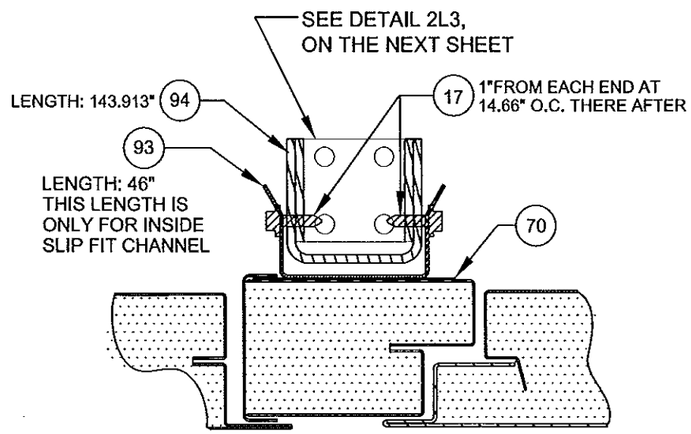

DETAIL 2L1

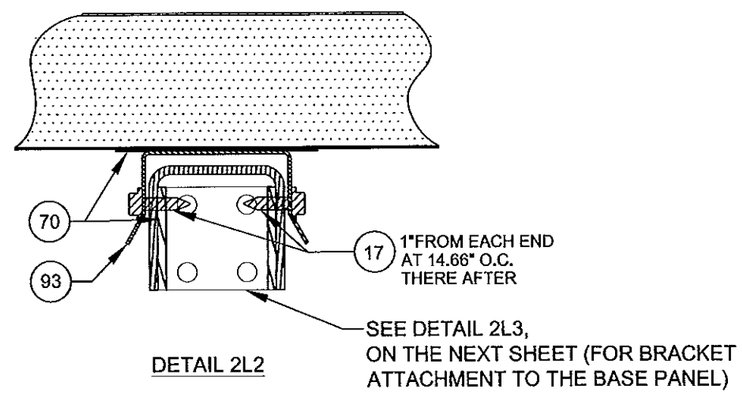

DETAIL 2L2

PRODUCT REVISED
as complying with the Florida
Building Code
Acceptance No 14-1120.13
Expiration Date 11/21/2018
By
Miami Dade Product Control

Approved as complying with the
Florida Building Code
Date 11/21/2013
NOA# 12-0629.02
Miami Dade Product Control
By

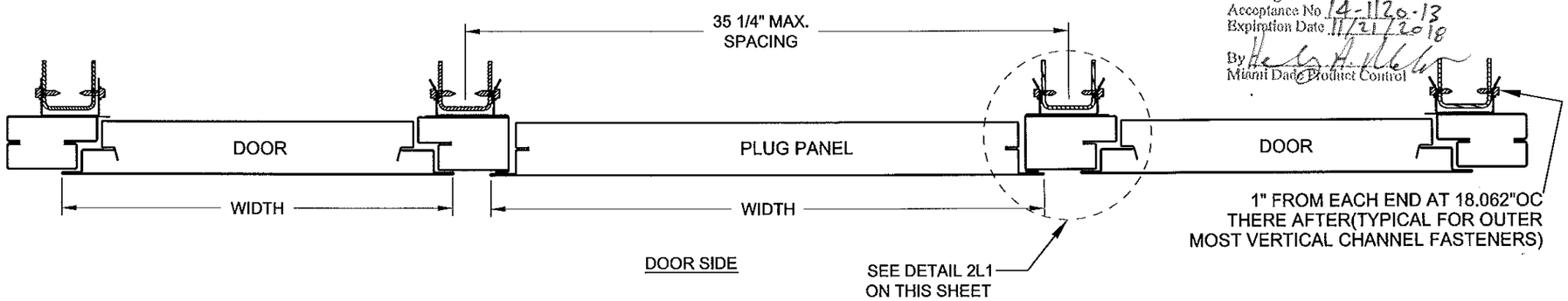

SCOTT WOLTERS
FL PE# 62354
WOLTERS ENGINEERING, INC.
(COA# 27194)
5358 SW 32ND TERRACE
FT. LAUDERDALE, FL 33312

NOV 06 2013

DRAWING #	DESC.		REV. HISTORY	BY:	REV.
AIRS0672	TRANE PERFORMANCE CLIMATE CHANGER AIR HANDLER - SIZE 50 STACKED UNIT	TRANE US Inc.	---	K.YUVARAJA	A
SHEET 33 OF 47 / SECTION			MOCK UPDWG SHEET REF: 6, 7, 17 OF 35	SCALE: NTS	DATE 06-SEP-2013

ENERGY WHEEL INTERNAL STRUCTURE CONSTRUCTION.

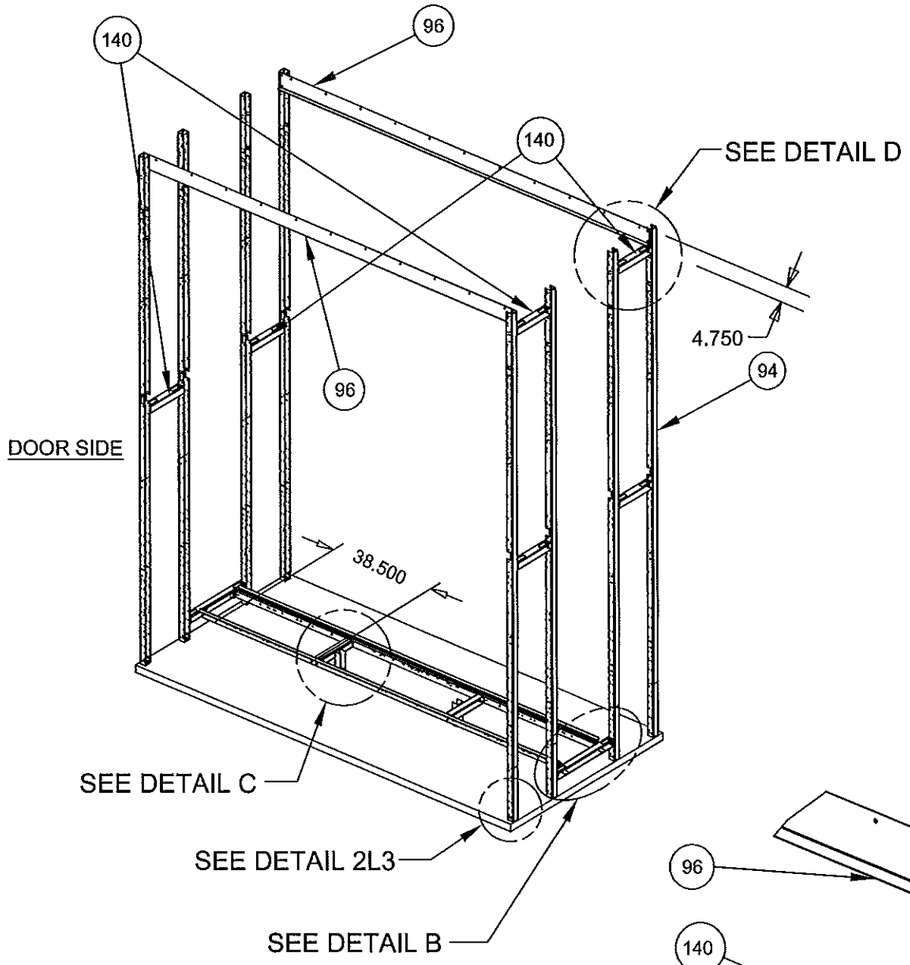

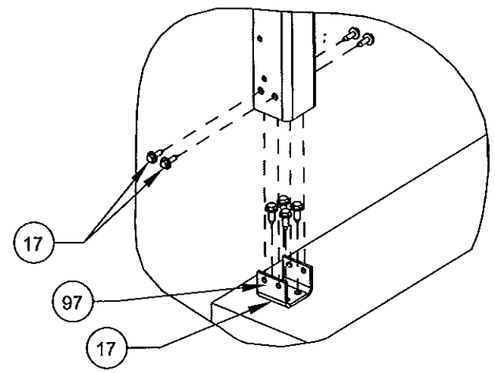

DETAIL 2L3

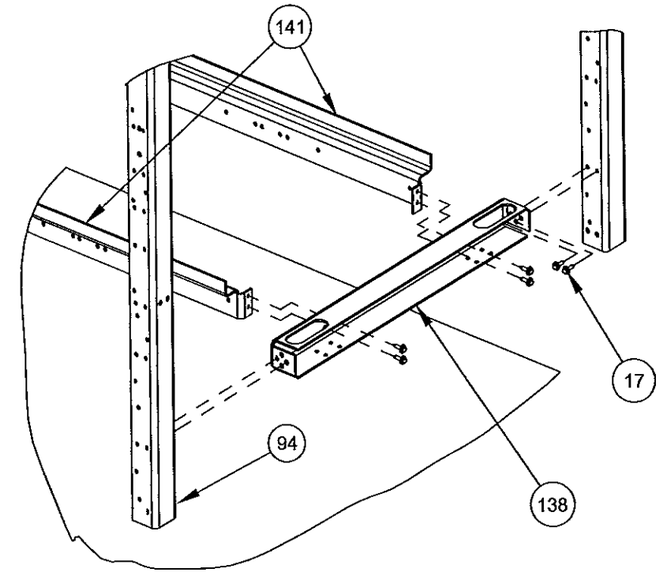

DETAIL B

PRODUCT REVISED
as complying with the Florida
Building Code
Acceptance No 14-1120.13
Expiration Date 11/21/2018
By
Miami Dade Product Control

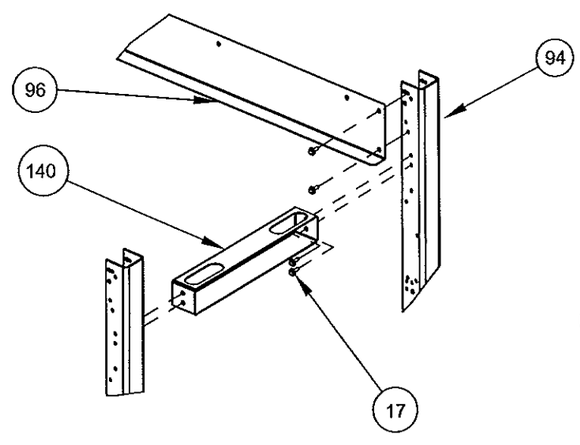

DETAIL D

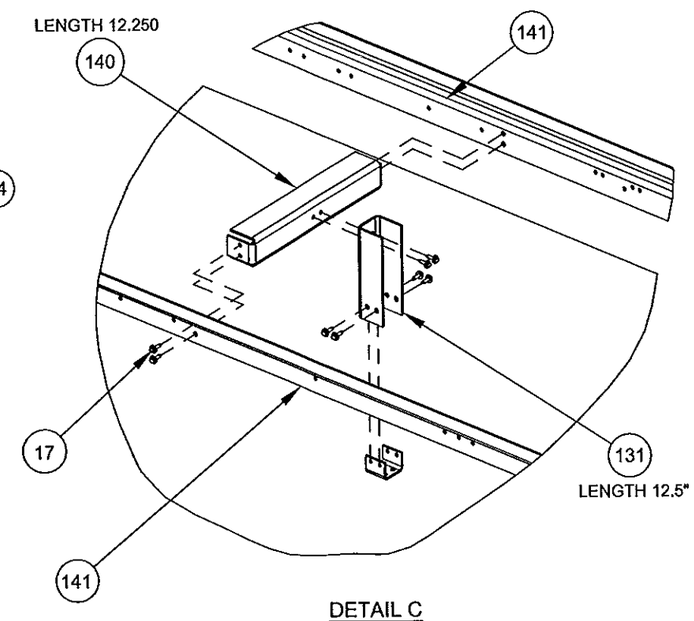

DETAIL C

Approved as complying with the
Florida Building Code
Date 11/21/2013
NOA# 12-0629.02
Miami Dade Product Control
By

NOTES:
1. ALL OF THESE STRUCTURES ATTACHED WITH ITEM 17.

SCOTT WOLTERS
FL PE# 62354
WOLTERS ENGINEERING, INC.
(COA# 27194)
5358 SW 32ND TERRACE
FT. LAUDERDALE, FL 33312
NOV 06 2013

DRAWING # AIRS0672	DESC. TRANE PERFORMANCE CLIMATE CHANGER AIR HANDLER - SIZE 50 STACKED UNIT	TRANE US Inc.	REV. HISTORY ---	BY: K.YUVARAJA	REV. A	
SHEET 34 OF 47 / SECTION			MOCK UPDWG SHEET REF: 7 OF 35	SCALE: NTS	DATE 06-SEP-2013	

ENERGY WHEEL SEPTUM INSTALLATION
(PARTS ARE EXPLODED FOR CLARITY)

NOTES:
1. ALL OF THESE STRUCTURES ATTACHED WITH ITEM 17.
2. 2-L SECTION HAS ROOF PANELS AND BASE PANELS, AND INBETWEEN THERE ARE FOAMED PANELS DIVIDES THE AIR FLOW, WHICH ARE CALLED SEPTUM PANELS.

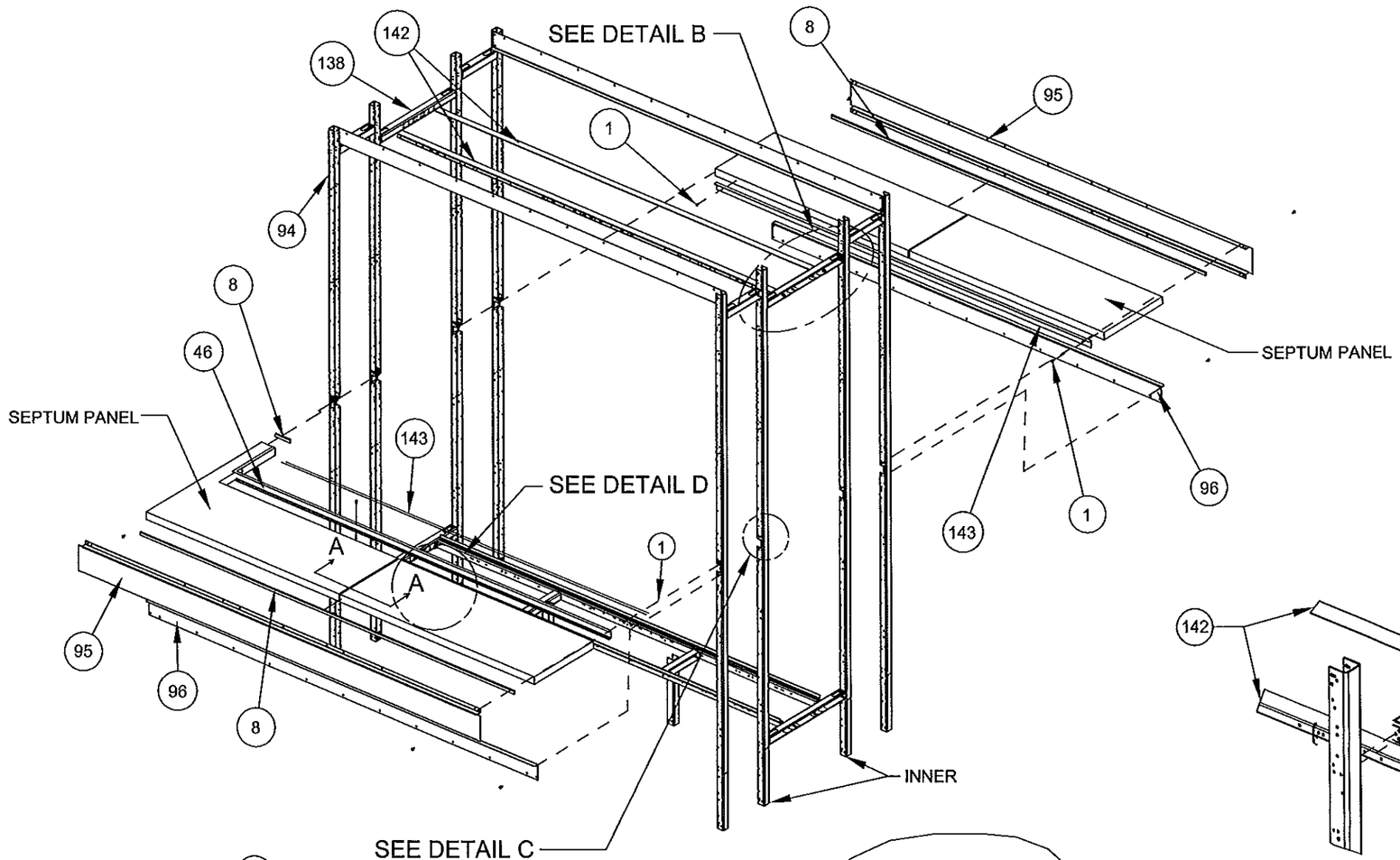

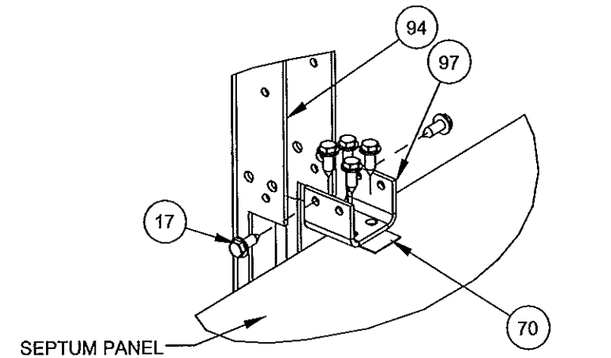

DETAIL C

NOTE:
APPLICABLE TO INNER 4 VERTICAL CHANNEL ONLY

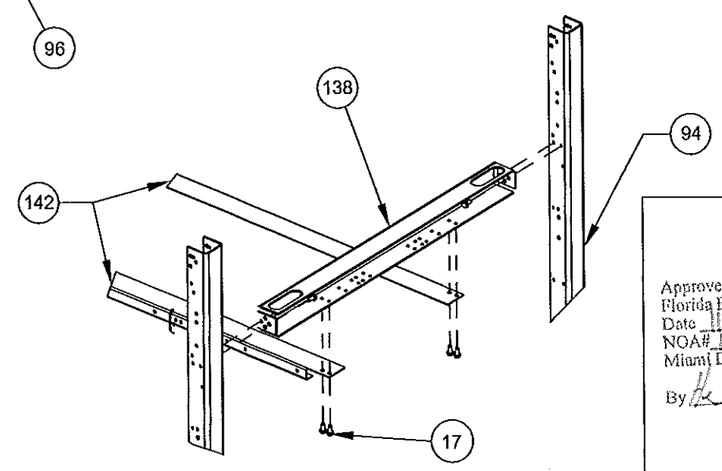

DETAIL B

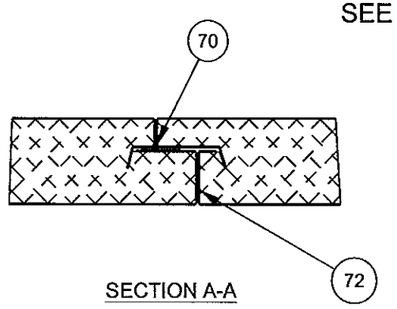

SECTION A-A

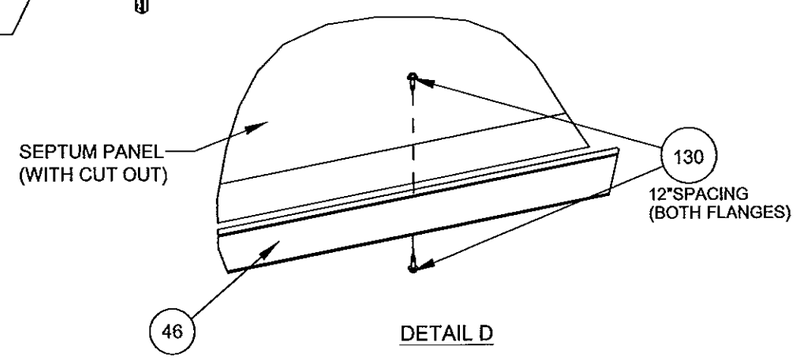

DETAIL D

Approved as complying with the Florida Building Code
Date 11/21/2013
NOA# 12-0623.02
Miami Dade Product Control
By

PRODUCT REVISED
as complying with the Florida Building Code
Acceptance No 14-1120.13
Expiration Date 11/21/2018
By
Miami Dade Product Control

SCOTT WOLTERS
FL PE# 62354
WOLTERS ENGINEERING, INC.
(COA# 27194)
5358 SW 32ND TERRACE
FT. LAUDERDALE, FL 33312
NOV 06 2013

DRAWING #	DESC.		REV. HISTORY	BY:	REV.
AIRS0672	TRANE PERFORMANCE CLIMATE CHANGER AIR HANDLER - SIZE 50 STACKED UNIT	TRANE US Inc.	---	K.YUVARAJA	A
SHEET 35 OF 47 / SECTION			MOCK UPDWG SHEET REF: 9 OF 35	SCALE: NTS	DATE 06-SEP-2013

ENERGY WHEEL CROSS SECTION X-X

FROM PAGE 32

(Foam Panel only- Corner Cross Sections are the same as typical base and foamed roof corners of 1st level AHU. See page 5)

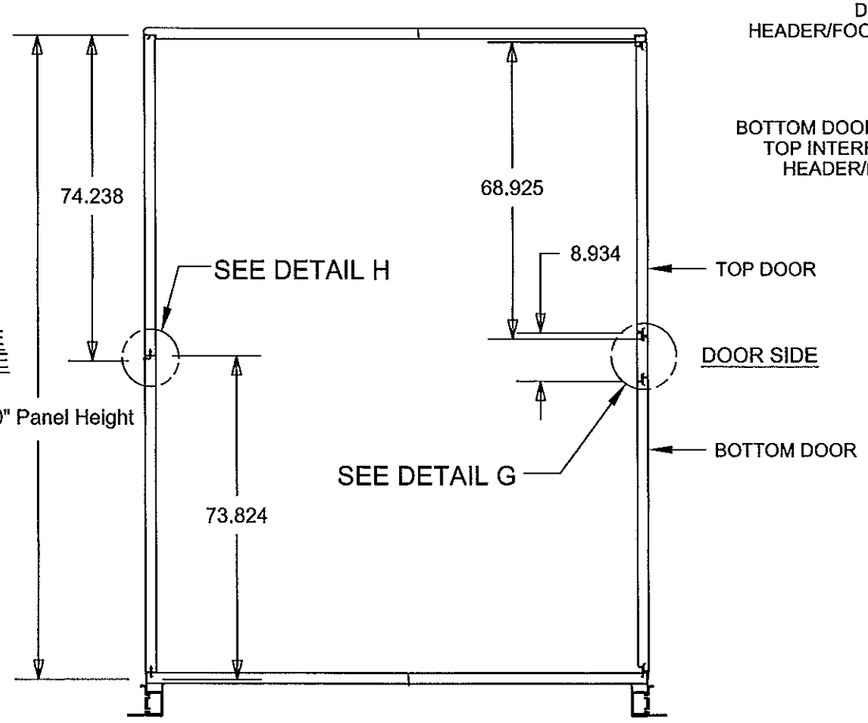

SECTION VIEW X-X

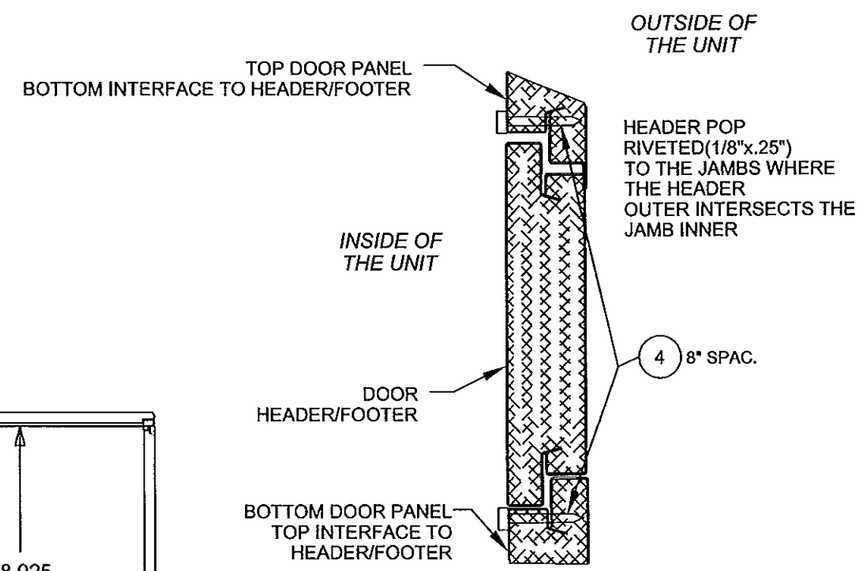

DETAIL G

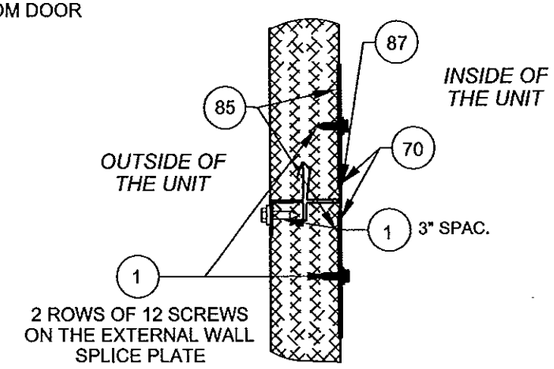

DETAIL H

ENERGY WHEEL PLUG PANEL INSTALL

SEE PAGE 32 DOOR SIDE

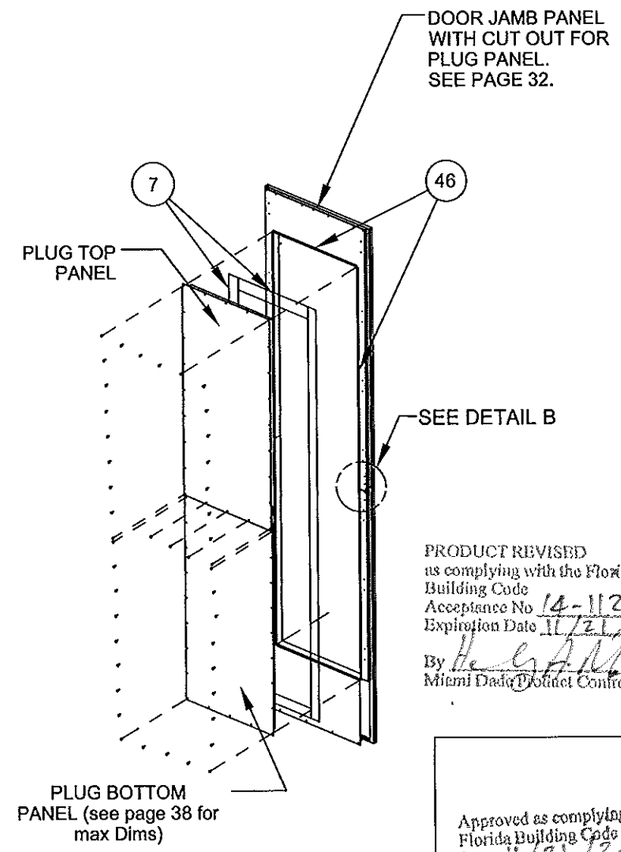

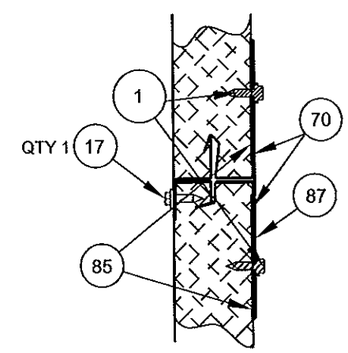

DETAIL B

PRODUCT REVISED
as complying with the Florida
Building Code
Acceptance No 14-1120.13
Expiration Date 11/21/2018
By
Miami Dade Product Control

Approved as complying with the
Florida Building Code
Date 11/21/2013
NOA# 12-0629.02
Miami Dade Product Control
By

SCOTT WOLTERS
FL PE# 62354
WOLTERS ENGINEERING, INC.
(COA# 27194)
5358 SW 32ND TERRACE
FT. LAUDERDALE, FL 33312
NOV 06 2013

DRAWING # AIRS0672	DESC. TRANE PERFORMANCE CLIMATE CHANGER AIR HANDLER - SIZE 50 STACKED UNIT	TRANE US Inc.	REV. HISTORY ---	BY: K.YUVARAJA	REV. A
SHEET 36 OF 47 / SECTION			MOCK UPDWG SHEET REF: 20, 23 OF 35	SCALE: NTS	DATE 06-SEP-2013

ENERGY WHEEL SHIPPING SPLIT DETAILS

REFER TO PAGE 32

STEP 1

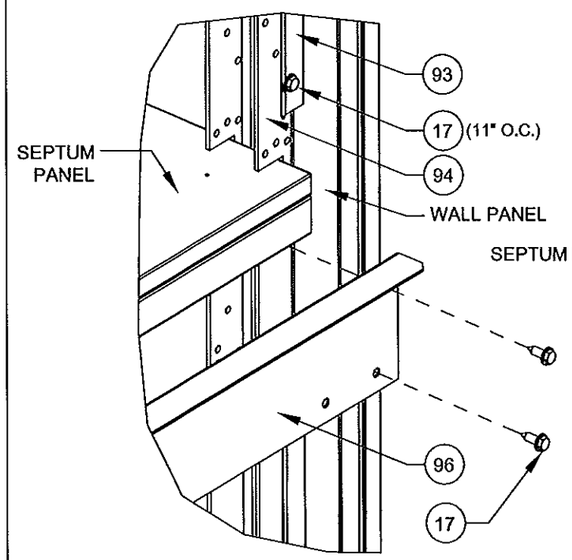

STEP 2

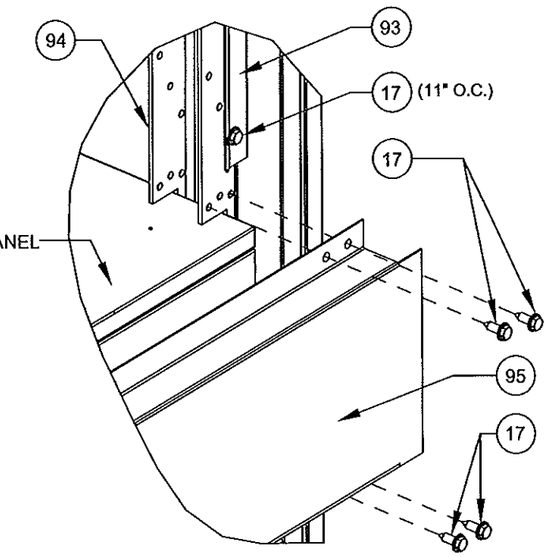

DETAIL 2L4

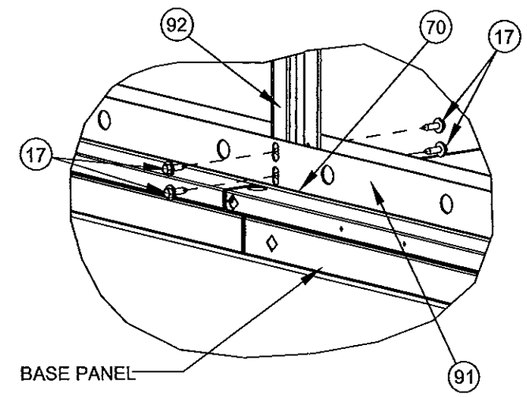

DETAIL 2L9

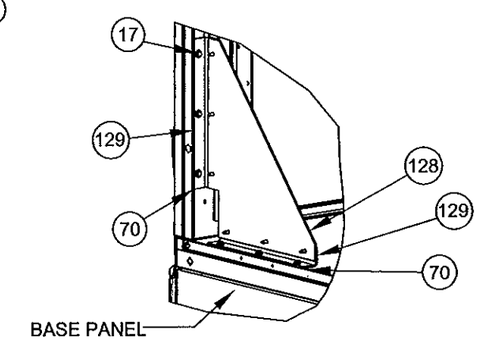

DETAIL 2L8

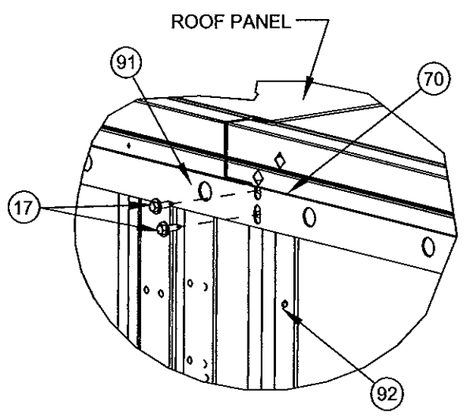

DETAIL 2L6

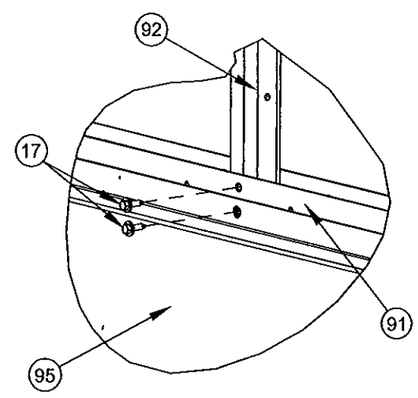

DETAIL 2L5

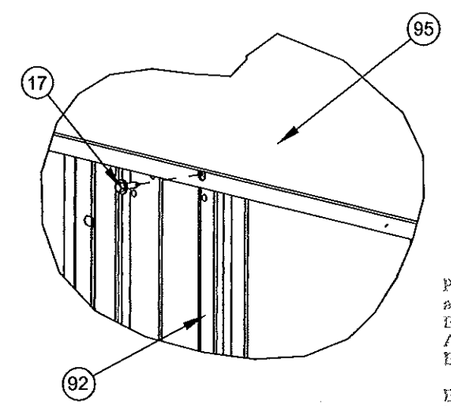

DETAIL 2L7

Approved as complying with the Florida Building Code
Date 11/21/2013
NOA# 12-0629.02
Miami Dade Product Control
By

PRODUCT REVISED
as complying with the Florida Building Code
Acceptance No 14-1120.13
Expiration Date 11/21/2016
By
Miami Dade Product Control

SCOTT WOLTERS
FL PE# 62354
WOLTERS ENGINEERING, INC.
(COA# 27194)
5358 SW 32ND TERRACE
FT. LAUDERDALE, FL 33312
NOV 06 2013

DRAWING #	DESC.		REV. HISTORY	BY:	REV.
AIRS0672	TRANE PERFORMANCE CLIMATE CHANGER AIR HANDLER - SIZE 50 STACKED UNIT	TRANE US Inc.	---	K.YUVARAJA	A
SHEET 37 OF 47 / SECTION			MOCK UPDWG SHEET REF: 12, 15 OF 35	SCALE: NTS	DATE 06-SEP-2013

ENERGY WHEEL SIDE WALL DETAILS
(Vertical Cross Sections)

NOTES:
1. SHOWING TOP VIEW FOR PANEL JOIN AND DIMENSIONS.

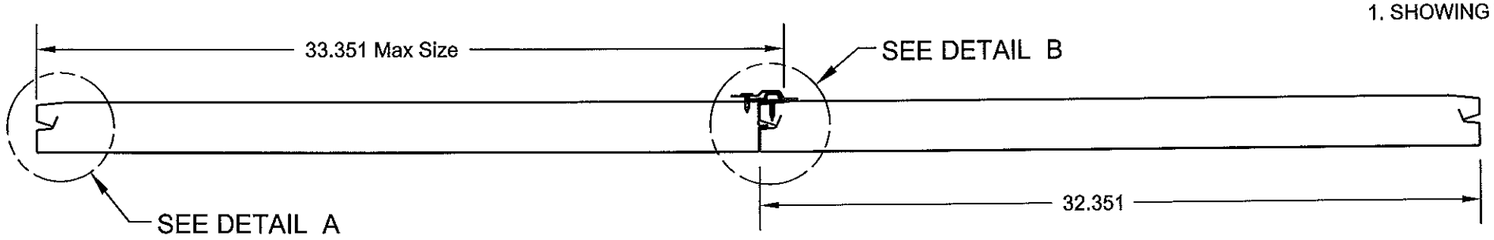

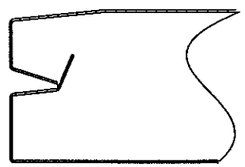

SHIPPING SPLIT WALL PANEL DETAIL A

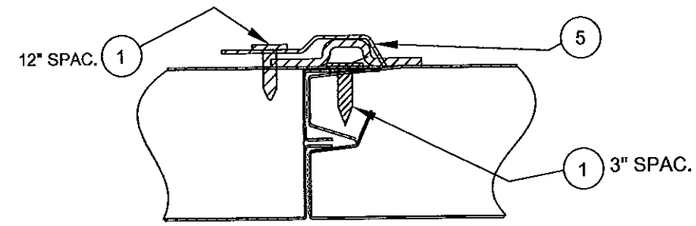

WALL JOINT TONGUE AND GROOVE DETAIL B

DETIAL 2L

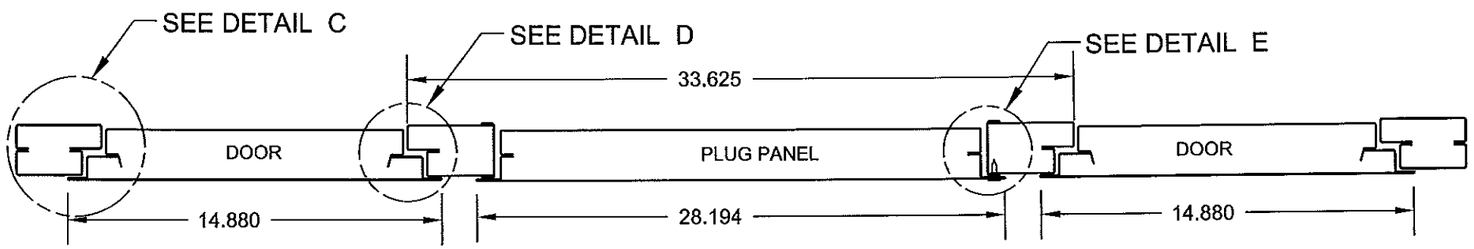

DOOR HEIGHT IS 68.925
QTY OF 2

PLUG PANEL TOP PORTION (L=56.013)
PLUG PANEL BOTTOM PORTION (L=59.041)

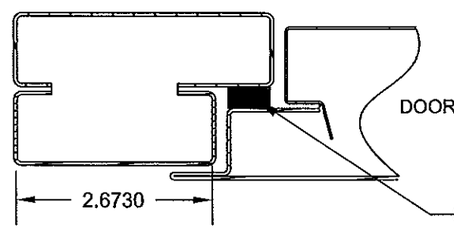

DETAIL C. NARROW DOOR JAMB TO DOOR

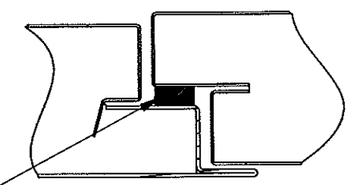

DETAIL D. DOOR TO WALL

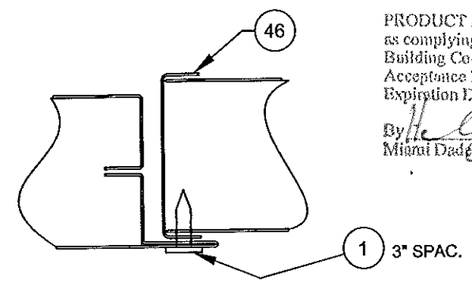

DETAIL E. PLUG PANEL TO WALL

DETIAL 2L2

PRODUCT REVISED
as complying with the Florida
Building Code
Acceptance No 14-1120.13
Expiration Date 11/21/2018
By
Miami Dade Product Control

Approved as complying with the
Florida Building Code
Date 11/21/2013
NOA# 12-0629.02
Miami Dade Product Control
By

SCOTT WOLTERS
FL PE# 62354
WOLTERS ENGINEERING, INC.
(COA# 27194)
5358 SW 32ND TERRACE
FT. LAUDERDALE, FL 33312
NOV 06 2013

DRAWING # AIRS0672	DESC. TRANE PERFORMANCE CLIMATE CHANGER AIR HANDLER - SIZE 50 STACKED UNIT	TRANE US Inc.	REV. HISTORY ---	BY: K.YUVARAJA	REV. A
SHEET 38 OF 47	SECTION		MOCK UPDWG SHEET REF: 16 OF 35	SCALE: NTS	DATE 06-SEP-2013

NOTE:
1. UNIT MAY BE INSTALLED ONTO CONCRETE (3.2 KSI MIN. COMPRESSIVE STRENGTH) OR 1/4" THICK STEEL (36 KSI MIN YIELD) SUBSTRATES WITH ANCHORS THROUGH LIFTING LUGS AND ANGLE CLIPS ATTACHED TO FIRST LEVEL BASE RAIL AS SHOWN IN THIS SHEET. UNIT MAY ALSO BE INSTALLED ONTO A 36KSI YIELD STEEL CURB BY OTHERS, WITH ITEM 17 SMS AS SHOWN IN DETAIL B. FOR PIPE CABINET ANCHORAGE SEE DETAILS P12 AND P13.

STANDARD UNIT AND ENERGY WHEEL SECTIONS ANCHORAGE DETAILS

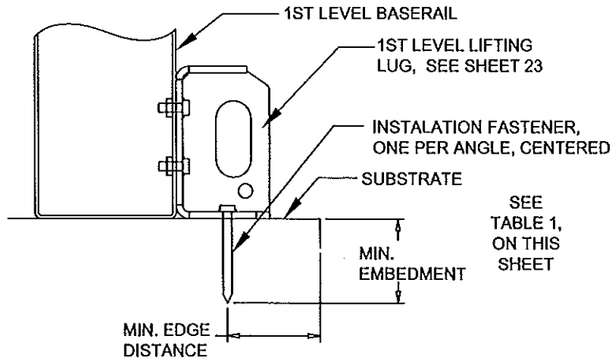

DETAIL A. TYPICAL ANCHORAGE AT LUGS

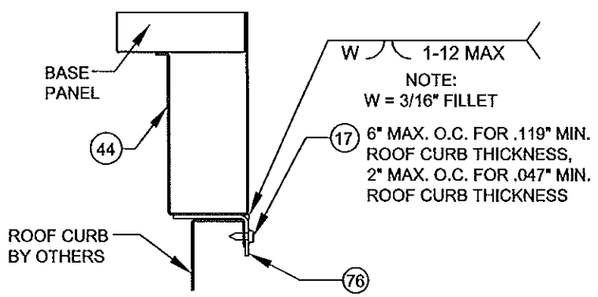

DETAIL B. TYPICAL INSTALLATION BASE RAIL TO CURB

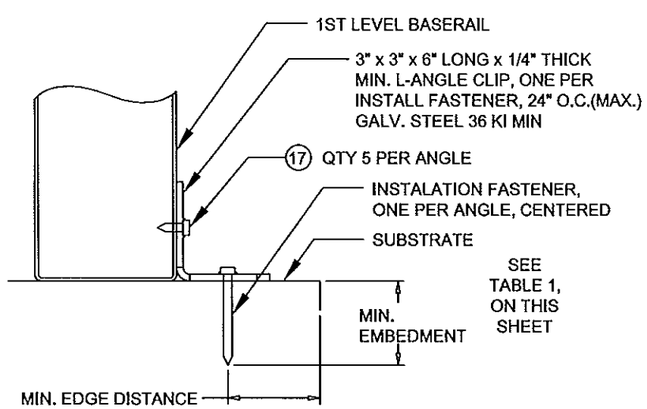

DETAIL C: TYPICAL ANCHORAGE AT ANGLE CLIPS

TABLE 1. INSTALLATION ANCHOR INFORMATION

ANCHOR / SUBSTRATE	MIN. EMBED.	MIN. EDGE DIST.
1/2" POWERS CHEM- STUD THREADED ROD INSTALLED WITH CHEM-STUD ADHESIVE CAPSULE IN 3.2 KSI MIN CONCRETE SUBSTRATE	1 1/2"	6"
1/2" HH. F-TYPE THREAD CUTTING SCREW INSTALLED IN 36 KSI MIN STEEL 1/4" THICK MIN. (FULL THREAD ENGAGEMENT)	1/4"	1 1/4"

PIPE CABINET ANCHORAGE DETAILS

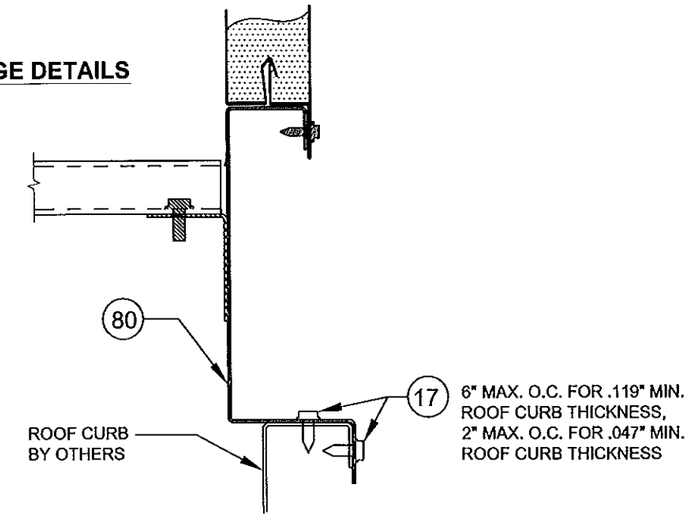

DETAIL P12. ANCHORAGE TO ROOF CURB

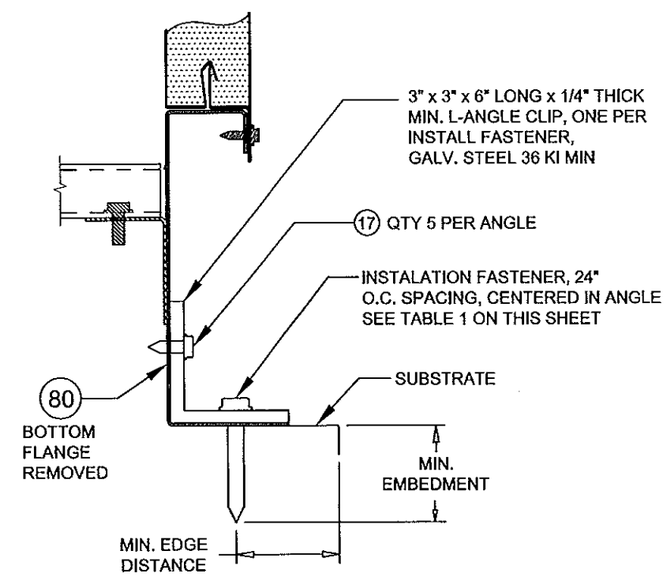

DETAIL P13. DIRECT ANCHORAGE TO SUBSTRATE

PRODUCT REVISED
as complying with the Florida Building Code
Acceptance No 14-1120.13
Expiration Date 11/21/2018
By
Miami Dade Product Control

Approved as complying with the Florida Building Code
Date 11/21/2013
NOA# 12-0629.02
Miami Dade Product Control
By

SCOTT WOLTERS
FL PE# 62354
WOLTERS ENGINEERING, INC.
(COA# 27194)
5358 SW 32ND TERRACE
FT. LAUDERDALE, FL 33312

NOV 06 2015

DRAWING #	DESC.		REV. HISTORY	BY:	REV.
AIRS0672	TRANE PERFORMANCE CLIMATE CHANGER AIR HANDLER - SIZE 50 STACKED UNIT	TRANE US Inc.	---	K.YUVARAJA	A
SHEET 39 OF 47 / SECTION			MOCK UPDWG SHEET REF: 25, 26, 29, 35, 36 OF 63	SCALE: NTS	DATE 06-SEP-2013

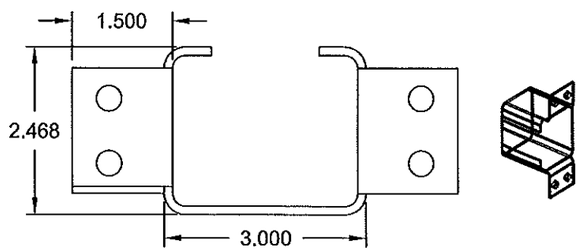

90. CROSS BEAM (2ND LEVEL) GALV .122

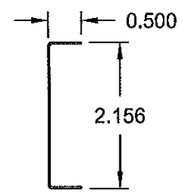

46. FOAM COVER GALV .027

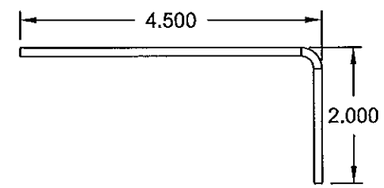

110. HOOD L ANGLE GALV .124

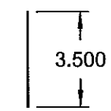

71. BACKING PLATE (ROOF) GALV .046

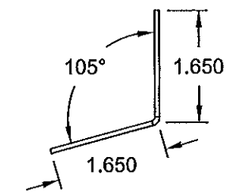

111. HOOD SUPPORT TOP CHANNEL GALV .068

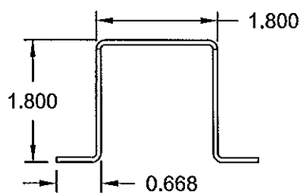

9. HAT CHANNEL GALV .070

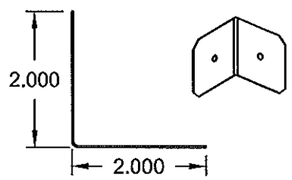

47. FOAM COVER CORNER GALV .027

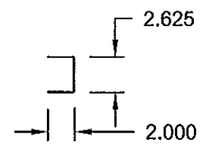

48. MULLION GALV .055

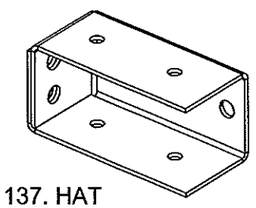

137. HAT CHANNEL BRACKET 3" X 1.5" X1.5" STEEL .067

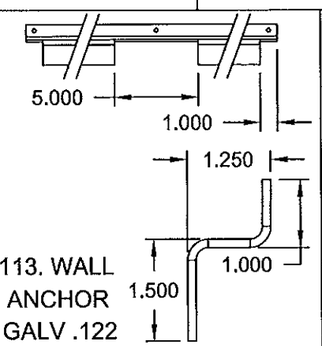

113. WALL ANCHOR GALV .122

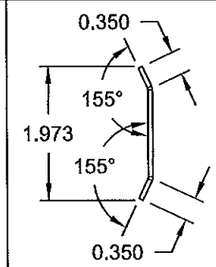

99/101. SEAM CAP GALV .068

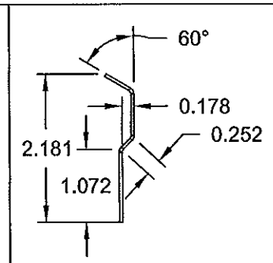

5. DECORATIVE COVER GALV .044

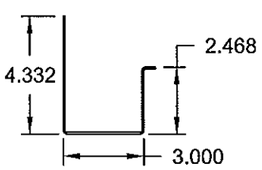

40. 2ND LEVEL BASE RAIL GALV .070

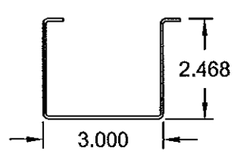

40. 2ND LEVEL BASE RAIL GALV .070

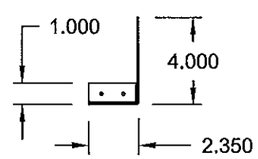

103. OVERHANG GALV .068

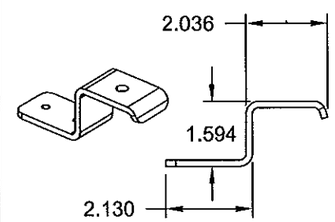

35. PADLOCK BRACKET GALV 0.156 MIN

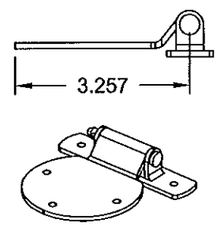

10. DOOR HINGE GALV 0.110

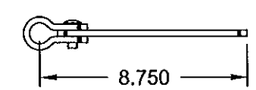

32.GANGED OPERATING HANDLE GALV 0.250

PRODUCT REVISED
as complying with the Florida Building Code
Acceptance No 14-1120.13
Expiration Date 11/21/2018
By
Miami Dade Product Control

Approved as complying with the Florida Building Code
Date 11/21/2013
NOA# 13-0629.02
Miami Dade Product Control
By

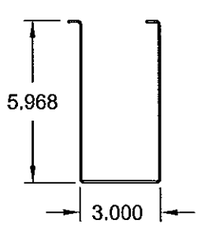

44. 1ST LEVEL BASE RAIL GALV .070

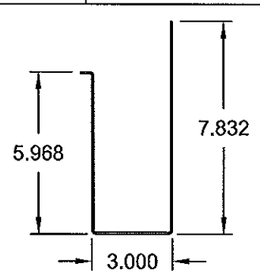

44. 1ST LEVEL BASE RAIL GALV .070

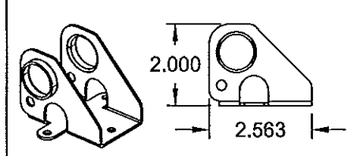

11/117. DOOR CAM BRACKET GALV 0.060

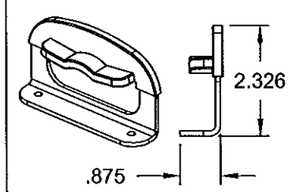

12. STRIKER PLATE GALV 0.110 MIN

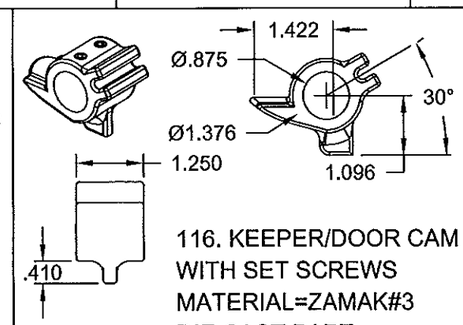

116. KEEPER/DOOR CAM WITH SET SCREWS MATERIAL=ZAMAK#3 DIE CAST PART

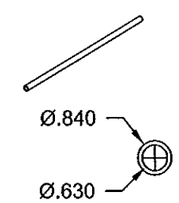

149. DOOR TUBE STEEL

SCOTT WOLTERS
FL PE# 62354
WOLTERS ENGINEERING, INC.
(COA# 27194)
5358 SW 32ND TERRACE
FT. LAUDERDALE, FL 33312

NOV 06 2013

DRAWING #	DESC.		REV. HISTORY	BY:	REV.
AIRS0672	TRANE PERFORMANCE CLIMATE CHANGER AIR HANDLER - SIZE 50 STACKED UNIT	TRANE US Inc.	---	K.YUVARAJA	A
SHEET 40 OF 47 / SECTION			MOCK UPDWG SHEET REF: 61 OF 63	SCALE: NTS	DATE 06-SEP-2013

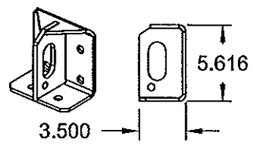

61. LIFTING LUG (1ST LEVEL) GALV .025

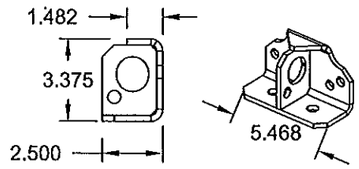

68. LIFTING LUG (2ND LEVEL) GALV .250

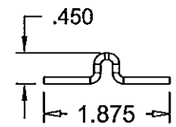

115. PC ROOF KEEL, ALUMINUM .100

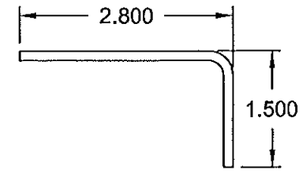

76. DRIP LIP GALV .124

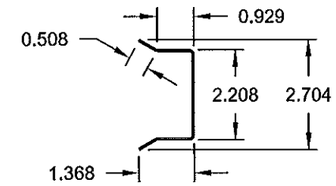

93. SLIP FIT CHANNEL GALV. .070

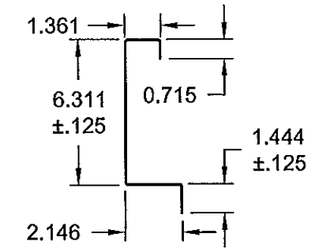

80. PC BASERAIL GALV. .070

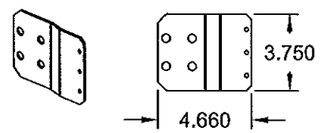

41. STACKED UNIT BRACKET GALV .124

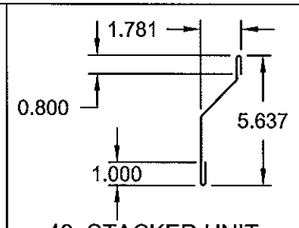

43. STACKED UNIT SKIRT GALV .068

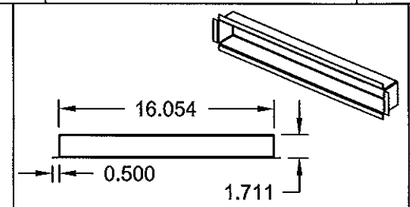

53. DISCONNECT BLOCK OFF GALV .028

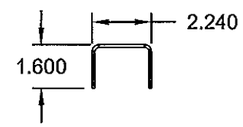

118. CROSS BEAM BRACKET GALV .124

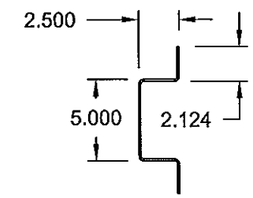

119. SUPPORT CHANNEL GALV .124

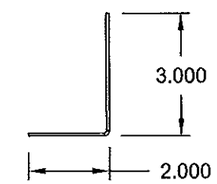

120. FLUE DUCT L ANGLE GALV .068

PRODUCT REVISED
as complying with the Florida
Building Code
Acceptance No 14-1120.13
Expiration Date 11/21/2018
By
Miami Dade Product Control

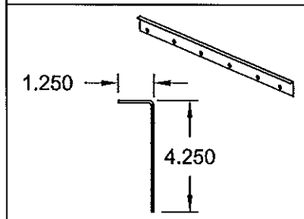

96. TOP L ANGLE / SEPTUM L ANGLE GALV .068

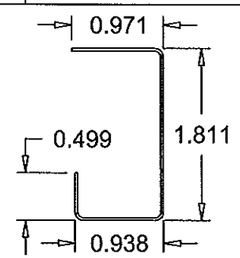

133. INNER DOOR HEADER (OLDER STYLE) GALV .028

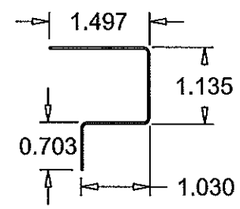

133. OUTER DOOR HEADER (OLDER STYLE) GALV .028

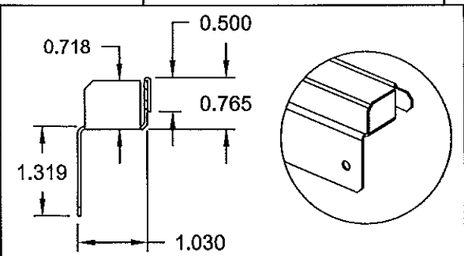

73. DOOR FOOTER GALV .045

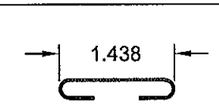

102. ROOFSTRIP GALV .027

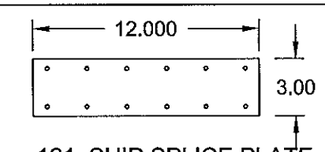

121. SHIP SPLICE PLATE GALV .044

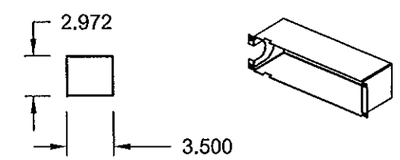

51. RACEWAY BOX GALV .043

Approved as complying with the
Florida Building Code
Date 11/21/2013
NOA# 12-0629.02
Miami Dade Product Control
By

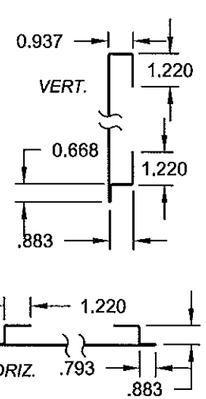

DOOR OUTER METAL EDGES GALV .028

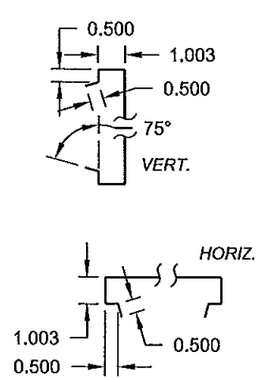

DOOR INNER METAL EDGES GALV .028

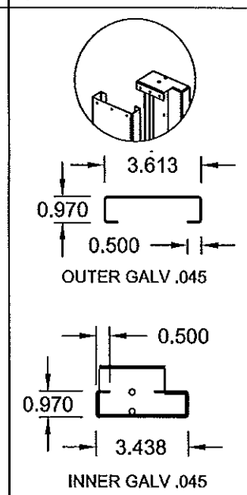

NARROW DOOR JAMB

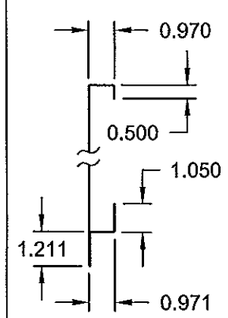

WALL PANEL OUTER METAL EDGES VERT. SECT. GALV .028

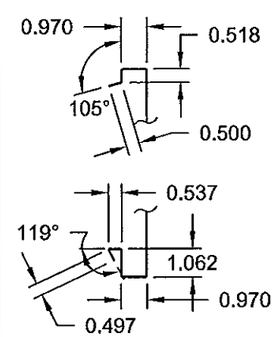

WALL PANEL INNER METAL EDGES VERT. SECT. GALV .028

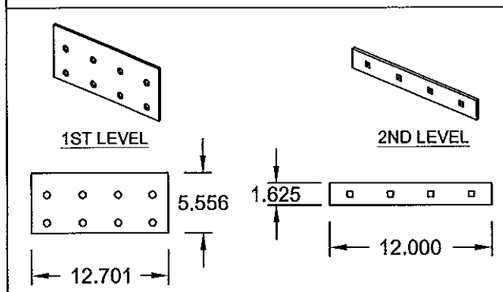

63. BASE RAIL SPLICE GALV .250

SCOTT WOLTERS
FL PE# 62354
WOLTERS ENGINEERING, INC.
(COA# 27194)
5358 SW 32ND TERRACE
FT. LAUDERDALE, FL 33312
NOV 06 2013

DRAWING # AIRS0672	DESC. TRANE PERFORMANCE CLIMATE CHANGER AIR HANDLER - SIZE 50 STACKED UNIT	TRANE US Inc.	REV. HISTORY ---	BY: K.YUVARAJA	REV. A
SHEET 41 OF 47 / SECTION			MOCK UPDWG 61 - 63 OF 63 / SHEET REF: 29 OF 35, AND 13 OF 19	SCALE: NTS	DATE 06-SEP-2013

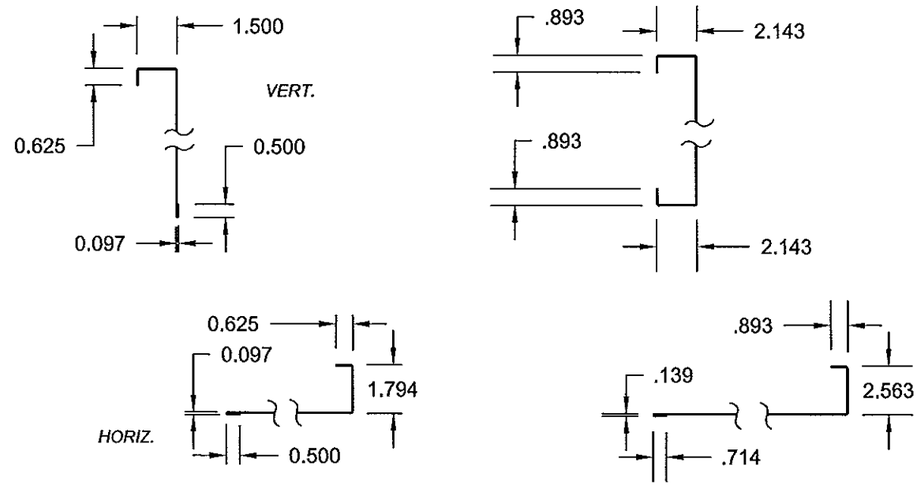

OUTDOOR ROOF DETIALS (ALL .043 GALV.)

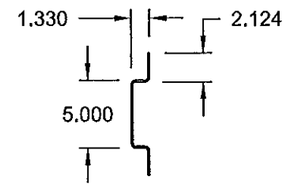

136. DOAF ROOF SUPPORT CHANNEL GALV .068

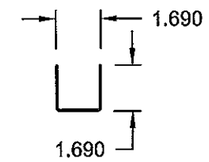

91. SHIPPING SPLIT SUPPORT ANGLE PTAF STEEL .068

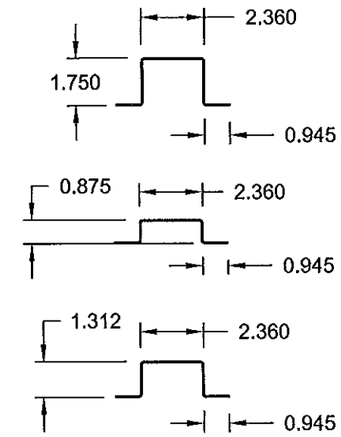

69. ROOF KEEL GALV .055

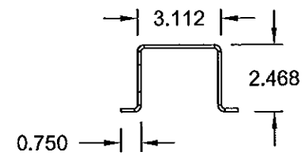

145. DOAF BASE SUPPORT CHANNEL GALV .68

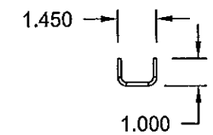

92. SHIPPING SPLIT VERTICAL CHANNEL STEEL .124

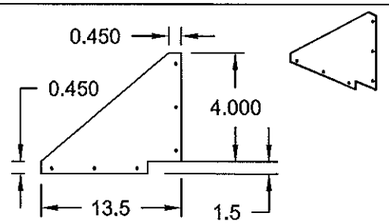

128. SUPPORT GUSSET (ALL .124 GALV.)

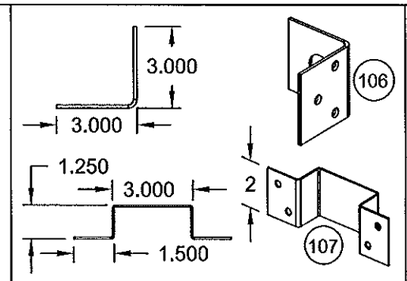

HOOD LIFTING LUGS GALV .124

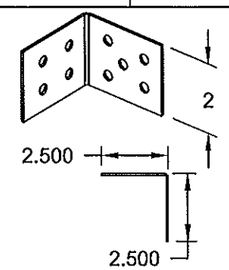

109. HOOD BRACKET GALV .070

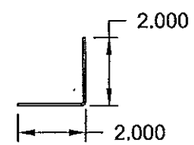

108. HOOD SUPPORT GALV .070

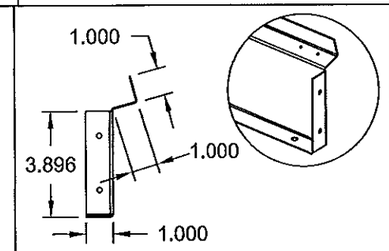

HOOD BOTTOM PANEL GALV .043

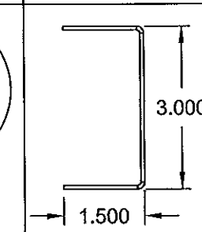

105. A FRAME VERTICAL GALV .070

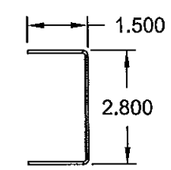

104. A FRAME HORIZONTAL GALV .070

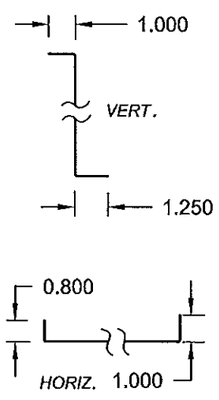

HOOD BACK PANEL GALV .043

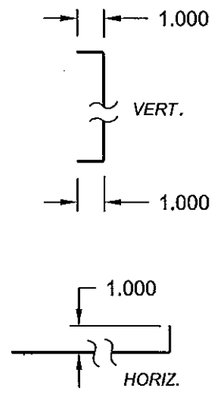

HOOD BACK PANEL GALV .043

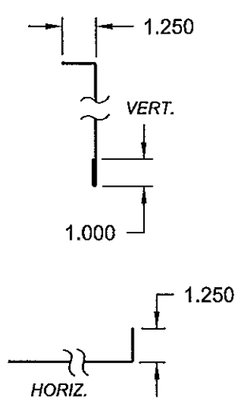

HOOD SIDE PANEL GALV .043

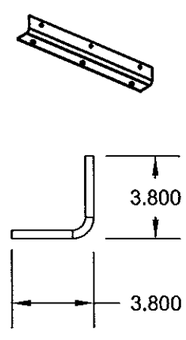

129. SUPPORT GUSSET BRACKET (ALL .124 GALV.)

2ND LEVEL

(147)

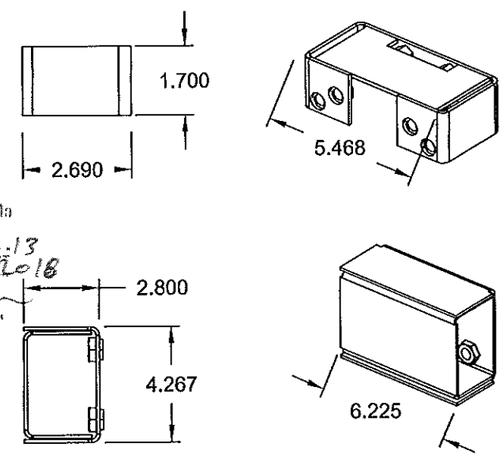

PRODUCT REVISED
as complying with the Florida Building Code
Acceptance No 14-1120.13
Expiration Date 11/21/2018
By
Miami Dade Product Control

1ST LEVEL

(148)

CORNER BLOCK GALV .124

Approved as complying with the Florida Building Code
Date 11/21/2013
NOA# 12-0629.02
Miami Dade Product Control
By

SCOTT WOLTERS
FL PE# 62354
WOLTERS ENGINEERING, INC.
(COA# 27194)
5358 SW 32ND TERRACE
FT. LAUDERDALE, FL 33312

NOV 15 2013

DRAWING # AIRS0672	DESC. TRANE PERFORMANCE CLIMATE CHANGER AIR HANDLER - SIZE 50 STACKED UNIT	TRANE US Inc.	REV. HISTORY ---	BY: K.YUVARAJA	REV. A
SHEET 42 OF 47 / SECTION			MOCK UPDWG SHEET REF: 58 - 60 OF 63	SCALE: NTS	DATE 06-SEP-2013

BASE PANEL METAL EDGE DETAILS
SECTION 1 (ALL .028 GALV.)

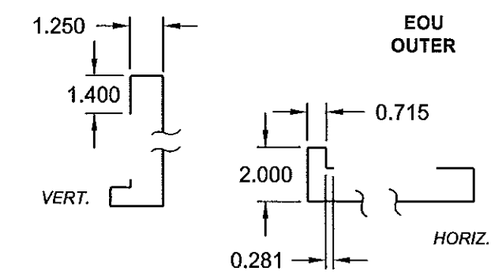

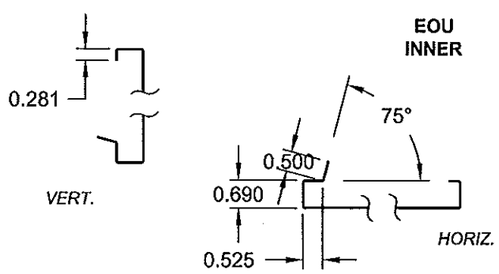

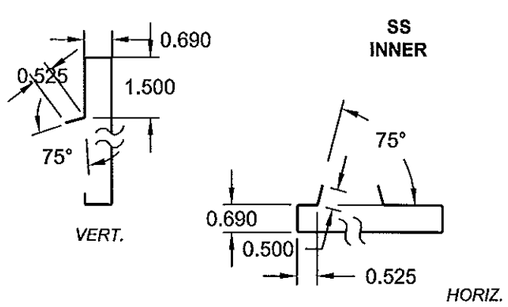

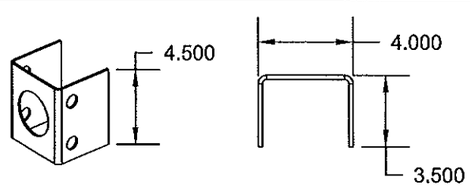

144. PC LIFFING LUG
GALV .124

BASE PANEL METAL EDGE DETAILS
SECTION 2 (ALL .028 GALV.)

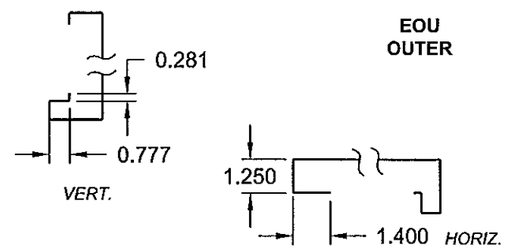

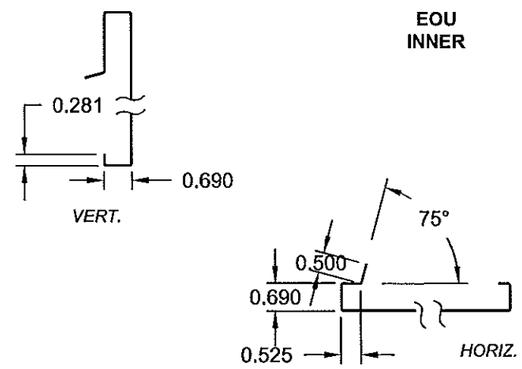

BASE PANEL METAL EDGE DETAILS
SECTION 3 (ALL .028 GALV.)

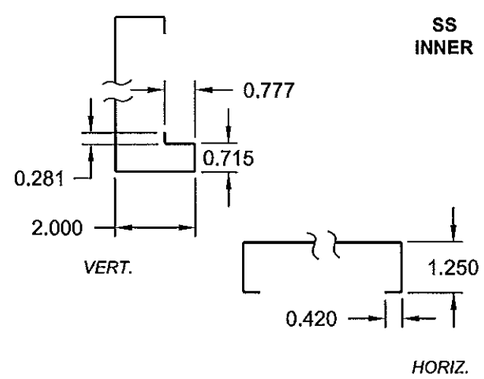

BASE PANEL METAL EDGE DETAILS
SECTION 4 (ALL .028 GALV.)

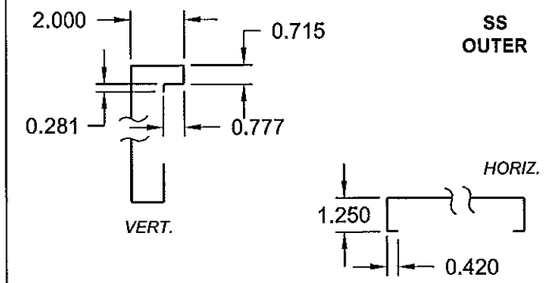

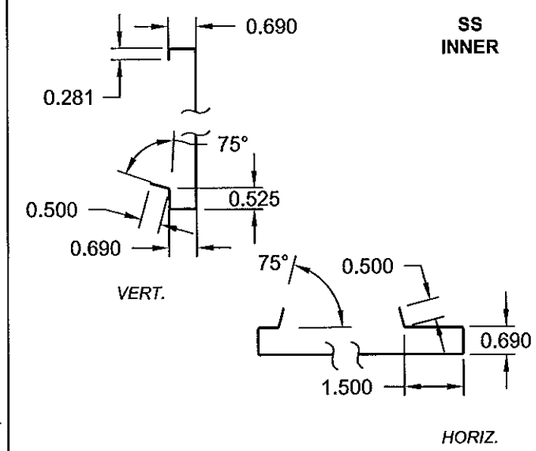

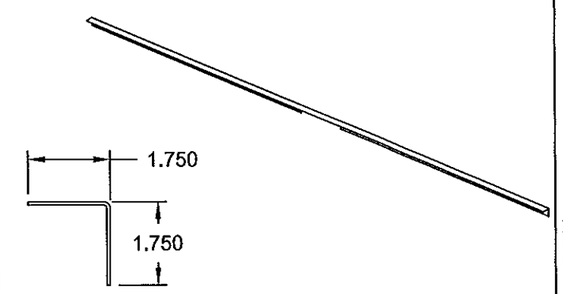

143.CASSETTE/SEPTUM
L ANGLE
GALV .068
LENGTH: 115"

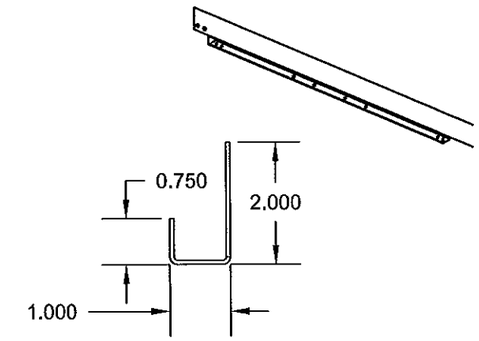

142. TOP CASSETTE TRACK
GALV .068

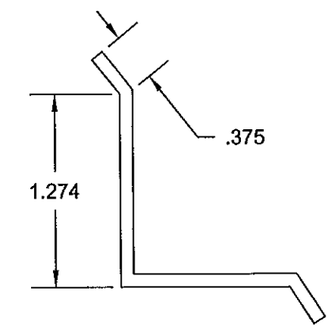

134. CORNER SEAM CAP
GALV .070

Approved as complying with the Florida Building Code
Date 11/21/2013
NOA# 12-0629.02
Miami Dade Product Control
By

PRODUCT REVISED
as complying with the Florida Building Code
Acceptance No 14-1120.13
Expiration Date 11/21/2018
By
Miami Dade Product Control

SCOTT WOLTERS
FL PE# 62354
WOLTERS ENGINEERING, INC.
(COA# 27194)
5358 SW 32ND TERRACE
FT. LAUDERDALE, FL 33312
NOV 06 2013

DRAWING #	DESC.		REV. HISTORY	BY:	REV.
AIRS0672	TRANE PERFORMANCE CLIMATE CHANGER AIR HANDLER - SIZE 50 STACKED UNIT	TRANE US Inc.	---	K.YUVARAJA	A
SHEET 43 OF 47 / SECTION			MOCK UPDWG SHEET REF: 27, 30 OF 35 54 OF 63	SCALE: NTS	DATE 06-SEP-2013

ROOF PANEL DETIAL
SECTION 5 (ALL .028 GALV.)

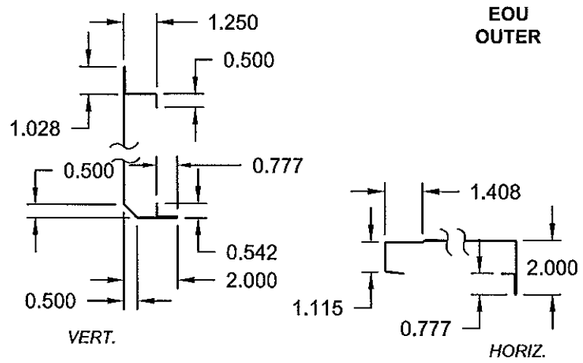

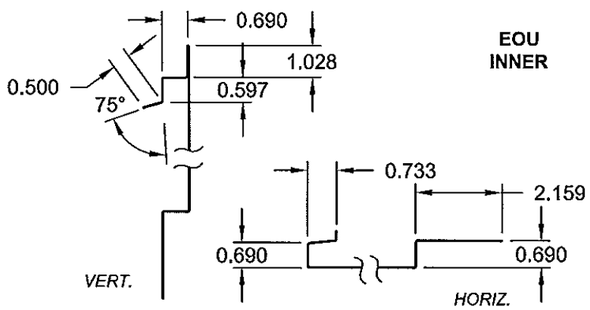

ROOF PANEL DETIAL
SECTION 6 (ALL .028 GALV.)

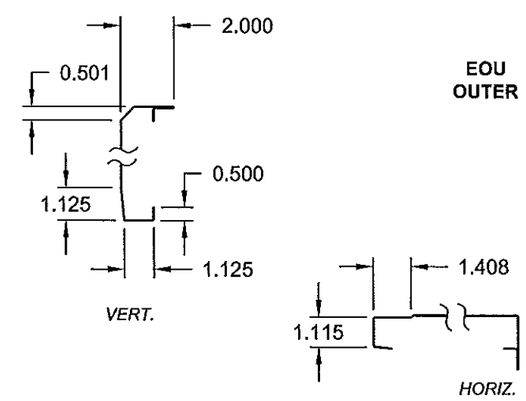

ROOF PANEL DETIAL
SECTION 6 (ALL .028 GALV.)

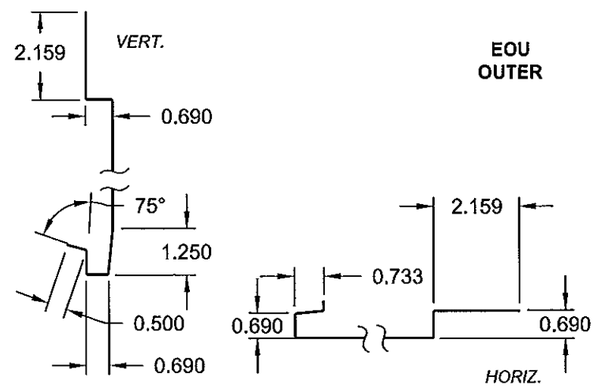

ROOF PANEL DETIAL
SECTION 7 (ALL .028 GALV.)

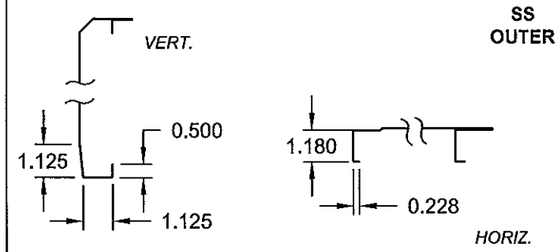

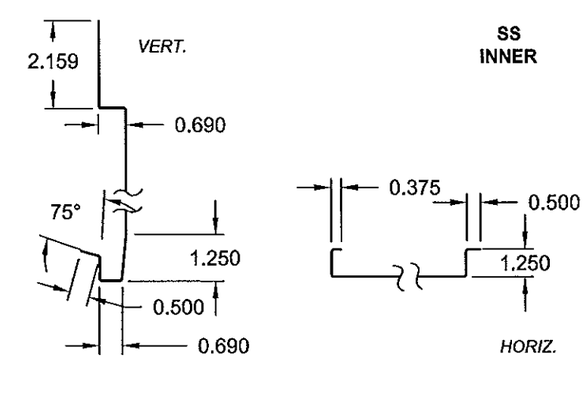

ROOF PANEL DETIAL
SECTION 8 (ALL .028 GALV.)

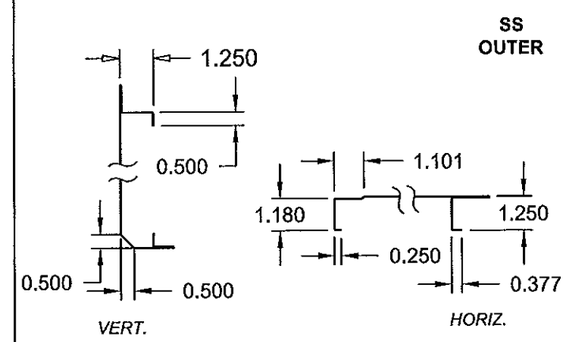

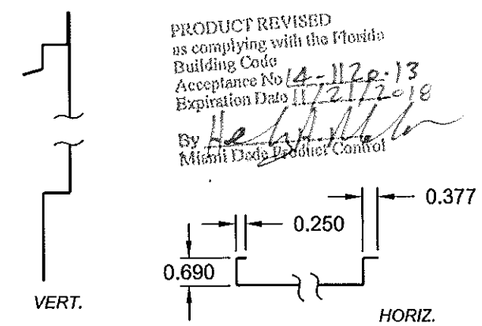

PRODUCT REVISED
as complying with the Florida
Building Code
Acceptance No 14-1120.13
Expiration Date 11/21/2018
By
Miami Dade Product Control

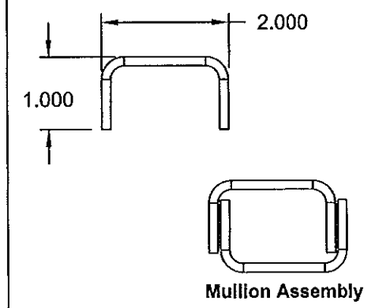

74. PIPE CABINET MULLION
ASSEMBLY (2 MULLION NESTED)
GALV. 0.122

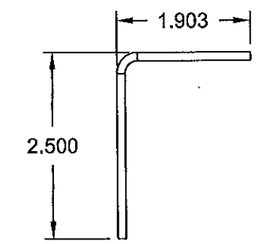

75. BASE SUPPORT CHANNEL
(PC BASE L ANGLE)
GALV. 0.070

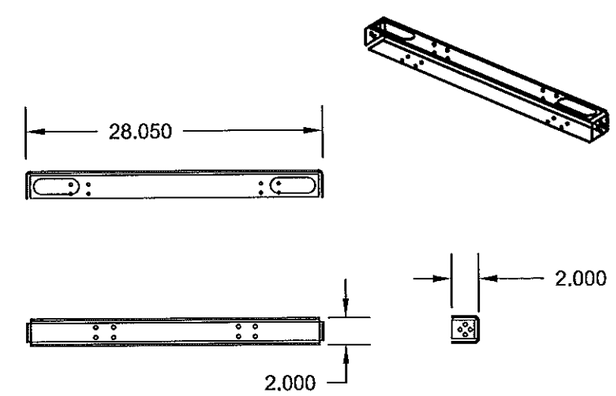

138. COLUMN SPACER
GALV .124

Approved as complying with the
Florida Building Code
Date 11/21/2013
NOA# 12-0629.02
Miami Dade Product Control
By

SCOTT WOLTERS
FL PE# 62354
WOLTERS ENGINEERING, INC.
(COA# 27194)
5358 SW 32ND TERRACE
FT. LAUDERDALE, FL 33312

NOV 06 2013

DRAWING #	DESC.		REV. HISTORY	BY:	REV.
AIRS0672	TRANE PERFORMANCE CLIMATE CHANGER AIR HANDLER - SIZE 50 STACKED UNIT	TRANE US Inc.	---	K.YUVARAJA	A
SHEET 44 OF 47 / SECTION			MOCK UPDWG 27 OF 35 / SHEET REF: 55, 56 OF 63	SCALE: NTS	DATE 06-SEP-2013

WALL PANEL DETIAL
(ALL .028 GALV.)

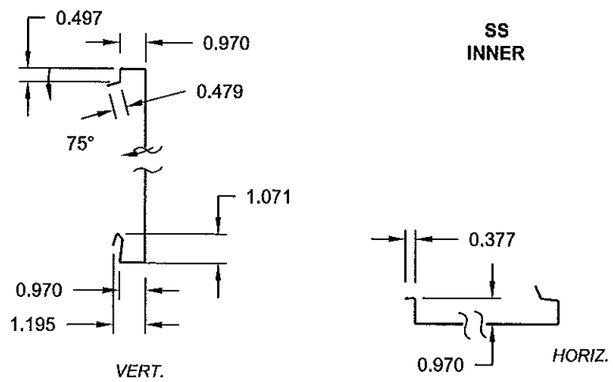

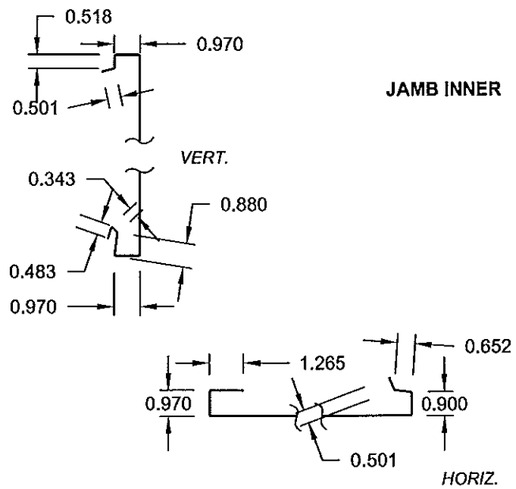

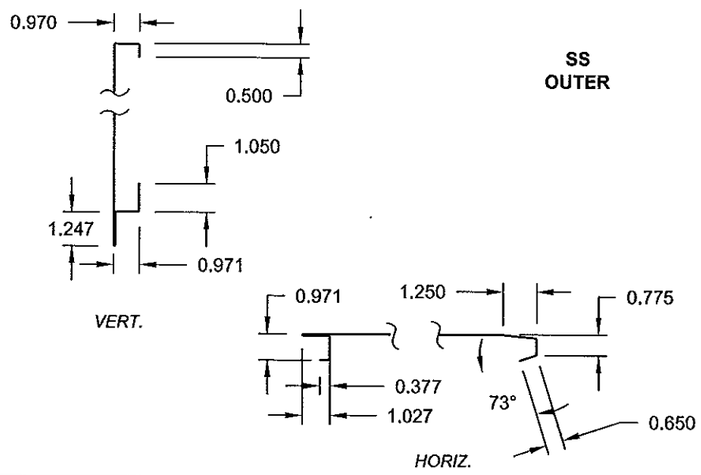

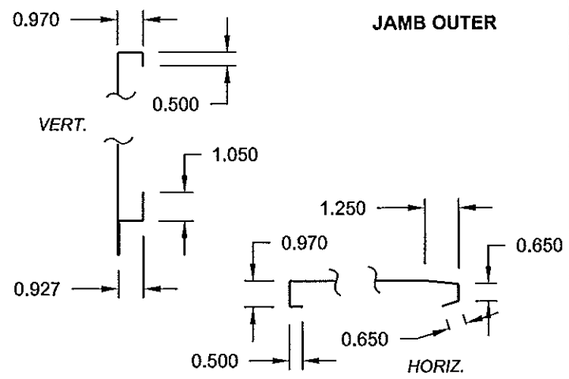

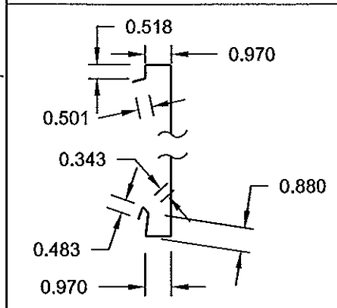

EOU INNER
GALV .028

PRODUCT REVISED
as complying with the Florida
Building Code
Acceptance No 14-1129.13
Expiration Date 11/21/2016
By
Miami Dade Product Control

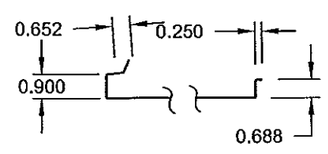

48. MULLION
GALV. 055
LENGTH: 30.939 & 60.090

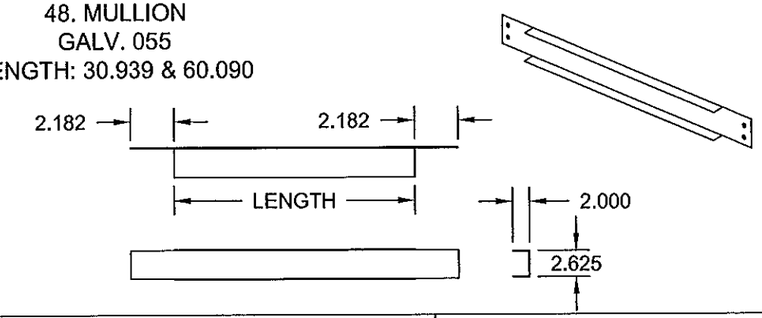

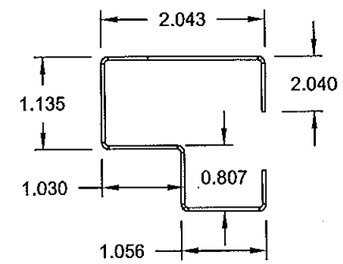

123. DETAIL OF NEW DOOR
HEADER
GALV .043

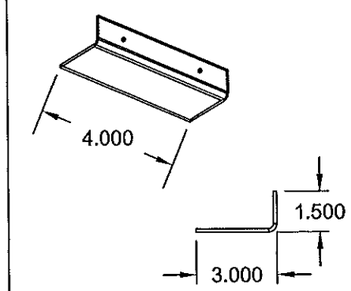

77. PC SHIPPING BRACKET
GALV. 0.124

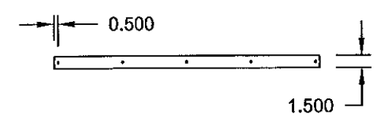

122. PC BACKING PLATE
GALV .068

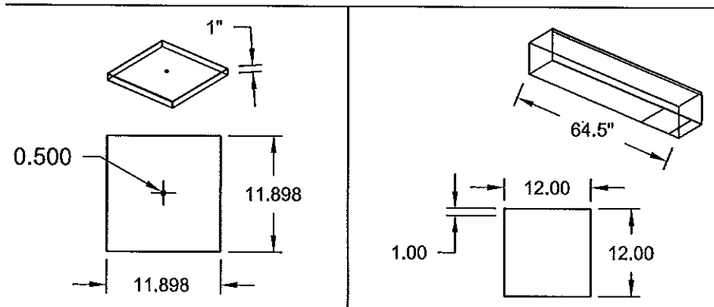

126. BOTTOM CAP
STAINLESS STEEL 0.034

127. FLUE DUCT
STAINLESS STEEL 0.034

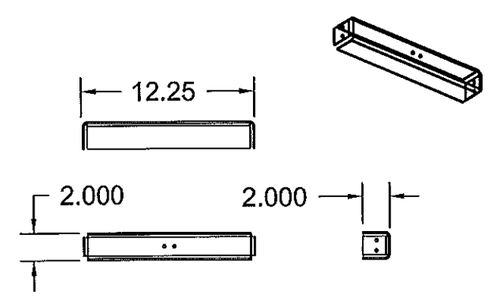

139. TRACK SUPPORT DOAF
GALV .124

Approved as complying with the
Florida Building Code
Date 11/21/2013
NOA# 12-0629.02
Miami Dade Product Control
By

SCOTT WOLTERS
FL PE# 62354
WOLTERS ENGINEERING, INC.
(COA# 27194)
5358 SW 32ND TERRACE
FT. LAUDERDALE, FL 33312
NOV 06 2013

DRAWING # AIRS0672	DESC. TRANE PERFORMANCE CLIMATE CHANGER AIR HANDLER - SIZE 50 STACKED UNIT	TRANE US Inc.	REV. HISTORY ---	BY: K.YUVARAJA	REV. A
SHEET 45 OF 47 / SECTION			MOCK UPDWG 27 OF 35 / SHEET REF: 57 OF 63	SCALE: NTS	DATE 06-SEP-2013

BASE PANEL METAL EDGE DETAILS (ALL .028 GALV.) (PIPE CABINET PARTS)

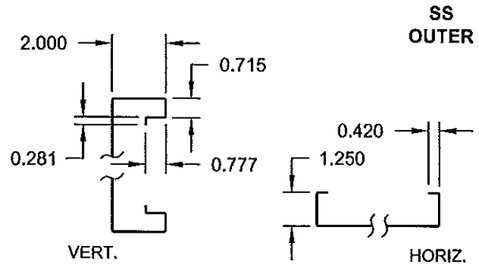

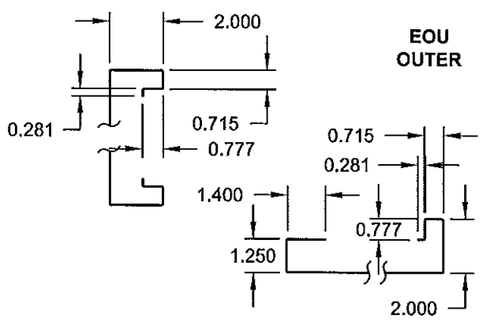

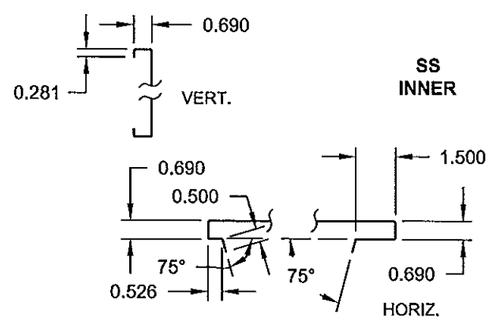

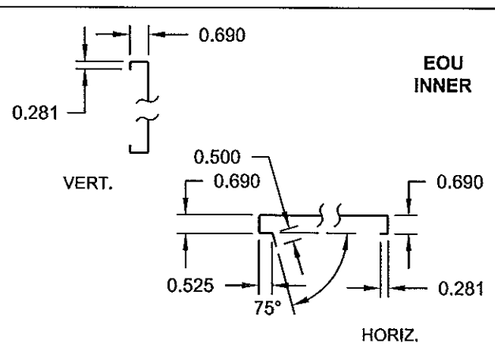

NARROW DOOR JAMB (PIPE CABINET PARTS)

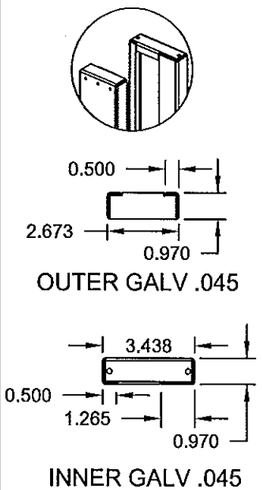

WALL PANEL METAL EDGES HORIZONTAL SECTIONS (ALL .028 GALV.) (PIPE CABINET PARTS)

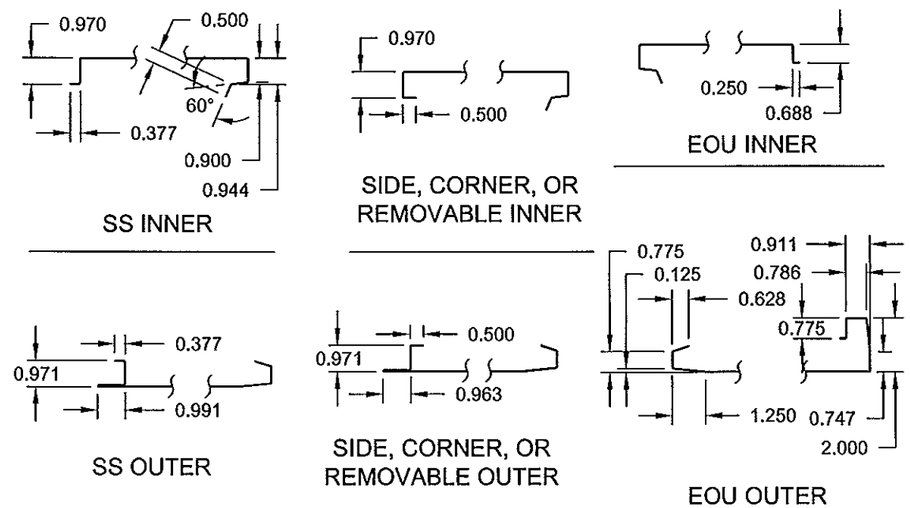

ROOF PANEL METAL EDGES HORIZONTAL SECTIONS (ALL .028 GALV.) (PIPE CABINET PARTS)

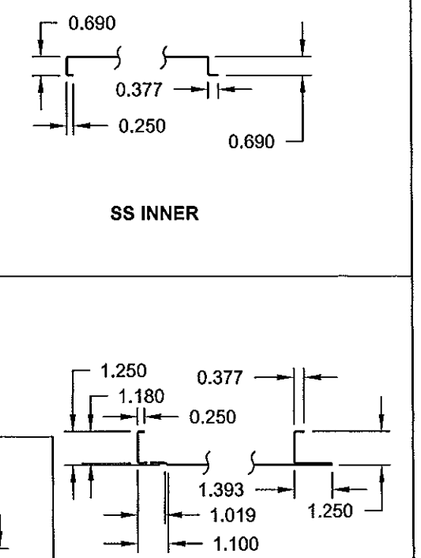

OUTDOOR ROOF METAL EDGE DETAILS (ALL .043 GALV.) (PIPE CABINET PARTS)

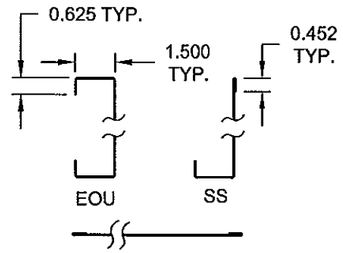

ROOF PANEL OUTER METAL EDGES VERT. SECT. GALV .028 (PIPE CABINET PARTS)

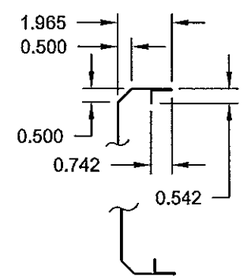

ROOF PANEL INNER METAL EDGES VERT. SECT. GALV .028 (PIPE CABINET PARTS)

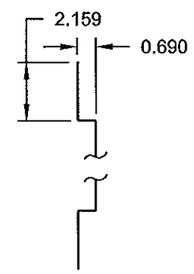

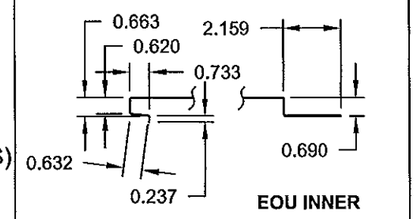

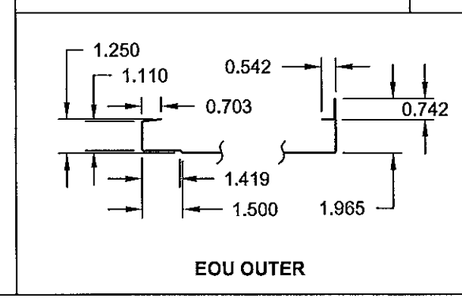

Approved as complying with the Florida Building Code
Date 11/21/2013
NOA# 13-0629.02
Miami Dade Product Control
By

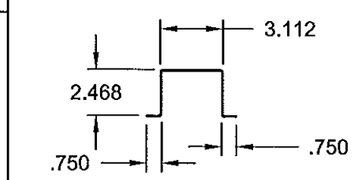

145. DOAF BASE SUPPORT CHANNEL GALV. .068

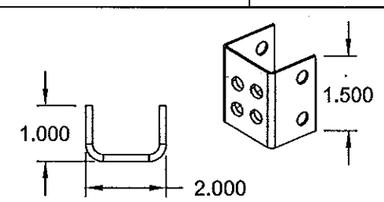

97. VERTICAL CHANNEL BRACKET GALV 0.122

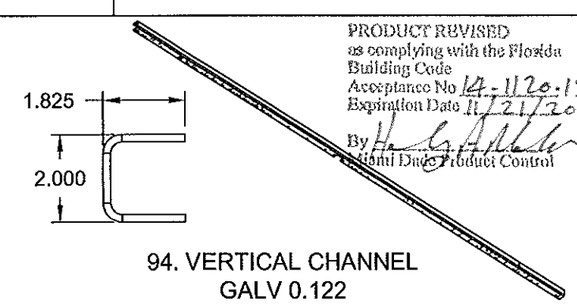

94. VERTICAL CHANNEL GALV 0.122

PRODUCT REVISED
as complying with the Florida Building Code
Acceptance No 14-1120.13
Expiration Date 11/21/2018
By
Miami Dade Product Control

SCOTT WOLTERS
FL PE# 62354
WOLTERS ENGINEERING, INC.
(COA# 27194)
5358 SW 32ND TERRACE
FT. LAUDERDALE, FL 33312
NOV 06 2013

DRAWING # AIRS0672	DESC. TRANE PERFORMANCE CLIMATE CHANGER AIR HANDLER - SIZE 50 STACKED UNIT	TRANE US Inc.	REV. HISTORY ---	BY: K.YUVARAJA	REV. A
SHEET 46 OF 47 / SECTION			MOCK UPDWG SHEET REF: 13 - 19 OF 19, 29 OF 35, AND 60 OF 63	SCALE: NTS	DATE 06-SEP-2013

85. EXTERNAL WALL SPLICE PLATE

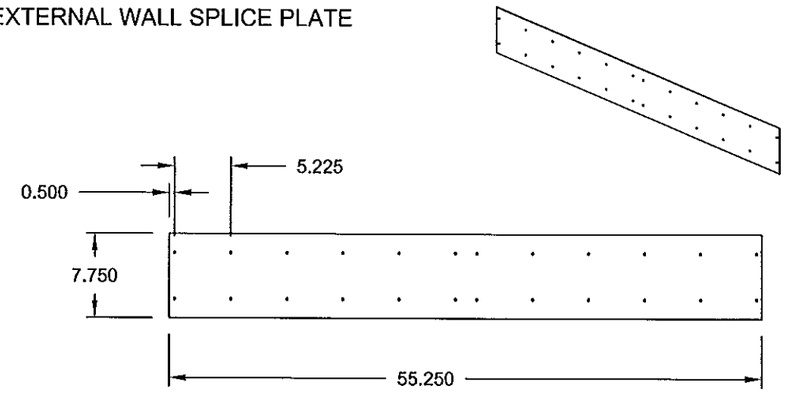

USED ON WALL PANEL
WITHOUT PLUG OPENING
GALV .044

85. INTERNAL WALL SPLICE PLATE

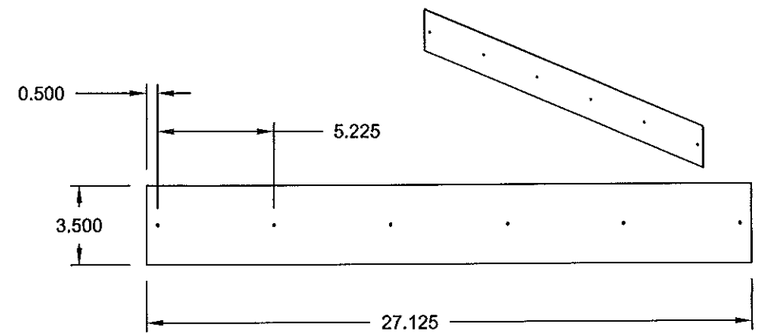

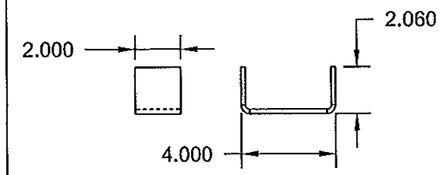

84. UNIT WELD BRACKET
GALV .124

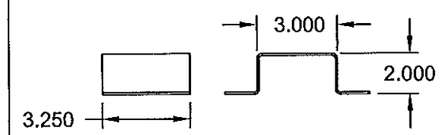

81. CHAIN GUDIE/GUARD
GALV .067

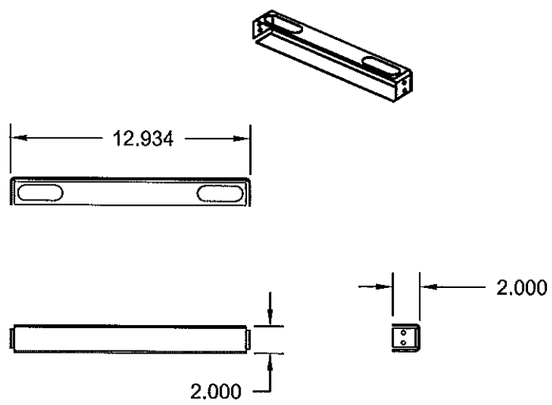

140. HORIZONTAL SUPPORT CHANNEL
GALV .068

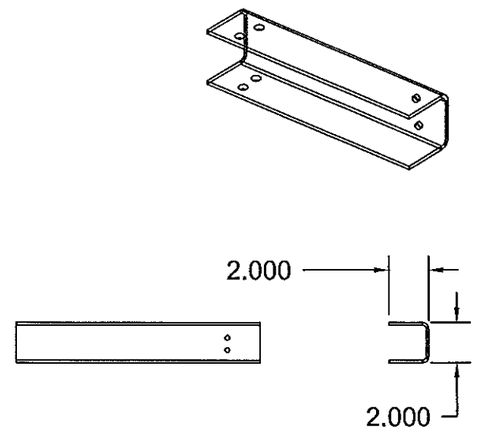

131. CASSETTE TRACK VERTICAL SUPPORT
GALV .124

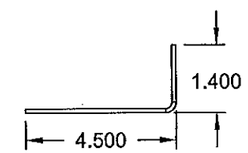

86. PC ROOF ANGLE
GALV .122

PRODUCT REVISED
as complying with the Florida
Building Code
Acceptance No 14-1120.13
Expiration Date 11/21/2018
By
Miami Dade Product Control

Approved as complying with the
Florida Building Code
Date 11/21/2013
NOA# 12-0629.02
Miami Dade Product Control
By

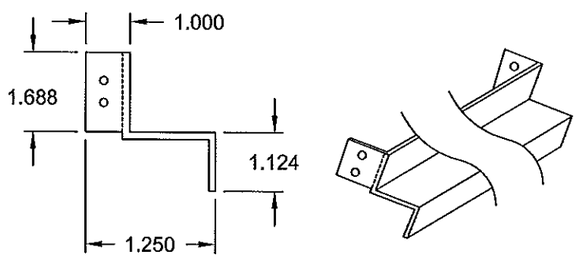

141. CASSETTE TRACK
GALV .124

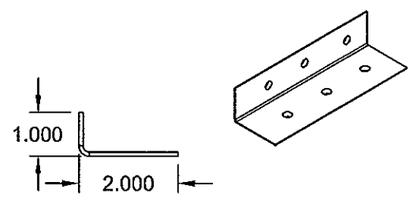

125. BOTTOM SMALL L ANGLE
GALV .068

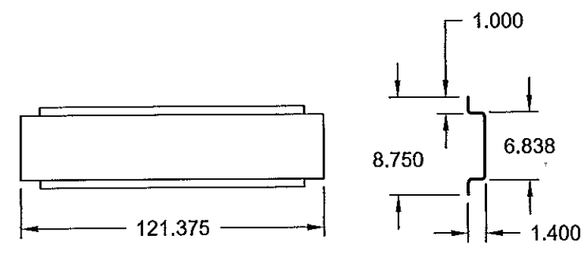

95. TRANSITION HAT CHANNEL
GALV .044

SCOTT WOLTERS
FL PE# 62354
WOLTERS ENGINEERING, INC.
(COA# 27194)
5358 SW 32ND TERRACE
FT. LAUDERDALE, FL 33312

NOV 06 2013

DRAWING #	DESC.		REV. HISTORY	BY:	REV.
AIRS0672	TRANE PERFORMANCE CLIMATE CHANGER AIR HANDLER - SIZE 50 STACKED UNIT	TRANE US Inc.	---	K.YUVARAJA	A
SHEET 47 OF 47 / SECTION			MOCK UPDWG SHEET REF: 28, 30 OF 35	SCALE: NTS	DATE 06-SEP-2013