MIAMI-DADE COUNTY
DEPARTMENT OF REGULATORY AND ECONOMIC RESOURCES (RER)
BOARD AND CODE ADMINISTRATION DIVISION

MIAMI-DADE COUNTY
PRODUCT CONTROL SECTION
11805 SW 26 Street, Room 208
T (786) 315-2590 F (786) 315-2599
www.miamidade.gov/economy

NOTICE OF ACCEPTANCE (NOA)

CGI Windows & Doors
10100 NW 25th Street
Miami, FL 33172

SCOPE:

This NOA is being issued under the applicable rules and regulations governing the use of construction materials. The documentation submitted has been reviewed and accepted by Miami-Dade County RER - Product Control Section to be used in Miami Dade County and other areas where allowed by the Authority Having Jurisdiction (AHJ).

This NOA shall not be valid after the expiration date stated below. The Miami-Dade County Product Control Section (In Miami Dade County) and/or the AHJ (in areas other than Miami Dade County) reserve the right to have this product or material tested for quality assurance purposes. If this product or material fails to perform in the accepted manner, the manufacturer will incur the expense of such testing and the AHJ may immediately revoke, modify, or suspend the use of such product or material within their jurisdiction. RER reserves the right to revoke this acceptance, if it is determined by Miami-Dade County Product Control Section that this product or material fails to meet the requirements of the applicable building code.

This product is approved as described herein, and has been designed to comply with the Florida Building Code, including the High Velocity Hurricane Zone.

DESCRIPTION: Series "Targa 7200" White PVC Horizontal Rolling Window – L.M.I.

APPROVAL DOCUMENT: Drawing No. **W13-42**, titled "Series 'Targa 7200' PVC Horiz. Roller Wdw. (L.M.I./S.M.I.)", sheets 1 through 11 of 11, dated 07/30/13, with revision B dated 10/16/14, prepared by Al-Farooq Corporation, signed and sealed by Javad Ahmad, P.E., bearing the Miami–Dade County Product Control Section Revision stamp with the Notice of Acceptance number and expiration date by the Miami–Dade County Product Control Section.

MISSILE IMPACT RATING: Large and Small Missile Impact Resistant

LABELING: Each unit shall bear a permanent label with the manufacturer's name or logo, city, state, model/series, and following statement: "Miami-Dade County Product Control Approved", unless otherwise noted herein.

RENEWAL of this NOA shall be considered after a renewal application has been filed and there has been no change in the applicable building code negatively affecting the performance of this product.

TERMINATION of this NOA will occur after the expiration date or if there has been a revision or change in the materials, use, and/or manufacture of the product or process. Misuse of this NOA as an endorsement of any product, for sales, advertising or any other purposes shall automatically terminate this NOA. Failure to comply with any section of this NOA shall be cause for termination and removal of NOA.

ADVERTISEMENT: The NOA number preceded by the words Miami-Dade County, Florida, and followed by the expiration date may be displayed in advertising literature. If any portion of the NOA is displayed, then it shall be done in its entirety.

INSPECTION: A copy of this entire NOA shall be provided to the user by the manufacturer or its distributors and shall be available for inspection at the job site at the request of the Building Official.

This NOA **revises NOA# 13-1115.07** and consists of this page 1 and evidence pages E-1 and E-2, as well as approval document mentioned above.

The submitted documentation was reviewed by **Manuel Perez, P.E.**

MIAMI-DADE COUNTY APPROVED

3/19/15

NOTICE OF ACCEPTANCE: EVIDENCE SUBMITTED

A. DRAWINGS

1. Manufacturer's die drawings and sections.
2. Drawing No. **W13-42**, titled "Series 'Targa 7200' PVC Horiz. Roller Wdw. (L.M.I./S.M.I.)", sheets 1 through 11 of 11, dated 07/30/13, with revision B dated 10/16/14, prepared by Al-Farooq Corporation, signed and sealed by Javad Ahmad, P.E.

B. TESTS

1. Test reports on: 1) Air Infiltration Test, per FBC, TAS 202–94
   2) Uniform Static Air Pressure Test, Loading per FBC, TAS 202–94
   3) Water Resistance Test, per FBC, TAS 202–94
   4) Large Missile Impact Test per FBC, TAS 201–94
   5) Cyclic Wind Pressure Loading per FBC, TAS 203–94
   6) Forced Entry Test, per FBC 2411.3.2.1, and TAS 202–94

   along with marked–up drawings and installation diagram of extruded vinyl equal leg,/fin/flange frame horizontal sliding windows, prepared by Element Materials Technology., Test Report No. **CTLA-3033W** dated 09/05/14, signed and sealed by Ramesh C. Patel, P.E.
2. Test reports on: 1) Air Infiltration Test, per FBC, TAS 202–94
   2) Uniform Static Air Pressure Test, Loading per FBC, TAS 202–94
   3) Water Resistance Test, per FBC, TAS 202–94
   4) Large Missile Impact Test per FBC, TAS 201–94
   5) Cyclic Wind Pressure Loading per FBC, TAS 203–94
   6) Forced Entry Test, per FBC 2411.3.2.1, and TAS 202–94

   along with marked–up drawings and installation diagram of extruded vinyl equal leg,/fin/flange frame horizontal sliding windows, prepared by Element Materials Technology., Test Report No. **EMT-ESP014637P,** dated 10/04/13, signed and sealed by Ramesh C. Patel, P.E.

   (Submitted under previous NOA No. 13-1115.07)

C. CALCULATIONS

1. Anchor verification calculations and structural analysis, complying with **FBC-5th Edition (2014)**, dated 10/11/14, prepared by Al-Farooq Corporation, signed and sealed by Javad Ahmad, P.E.
2. Glazing complies with **ASTM E1300-09**

D. QUALITY ASSURANCE

1. Miami-Dade Department of Regulatory and Economic Resources (RER).

Manuel Perez

Manuel Perez, P.E.
Product Control Examiner
NOA No. 14-1204.09
Expiration Date: February 20, 2019
Approval Date: March 26, 2015

NOTICE OF ACCEPTANCE: EVIDENCE SUBMITTED

E. MATERIAL CERTIFICATIONS

1. Notice of Acceptance No. **11-0624.02** issued to **E.I. DuPont DeNemours & Co.**, Inc. for their "**DuPont SentryGlas® Interlayer**" dated 08/25/11, expiring on 01/14/17.
2. Notice of Acceptance No. **14-0423.15** issued to **Eastman Chemical Company (MA)** for their "**Saflex CP - Saflex and Saflex HP Composite Glass Interlayers with PET Core**" dated 06/19/14, expiring on 12/11/18.
3. Notice of Acceptance No. **14-0423.17** issued to **Eastman Chemical Company (MA)** for their "**Saflex Clear and Color Glass Interlayers**" dated 06/19/14, expiring on 05/21/16.
4. Notice of Acceptance No. **13-1203.02** issued to Deceuninck North America, LLC for their "**White Rigid PVC Exterior Extrusions for Windows and Doors**" dated 02/20/14, expiring on 02/19/19.

F. STATEMENTS

1. Statement letter of conformance, complying with **FBC-5th Edition (2014)**, and of no financial interest, dated October 11, 2014, issued by Al-Farooq Corporation, signed and sealed by Javad Ahmad, P.E.
2. Approved Proposal issued by Product Control Section, dated 06/10/14, signed by Jaime Gascon, P.E., Supervisor, Product Control Section.

G. OTHERS

1. Notice of Acceptance No. **13-1115.07**, issued to CGI Windows & Doors, Inc. for their Series "Targa 7200" White PVC Horizontal Rolling Window - L.M.I., approved on 02/20/14 and expiring on 02/20/19.

Manuel Perez

Manuel Perez, P.E.
Product Control Examiner
NOA No. 14-1204.09
Expiration Date: February 20, 2019
Approval Date: March 26, 2015

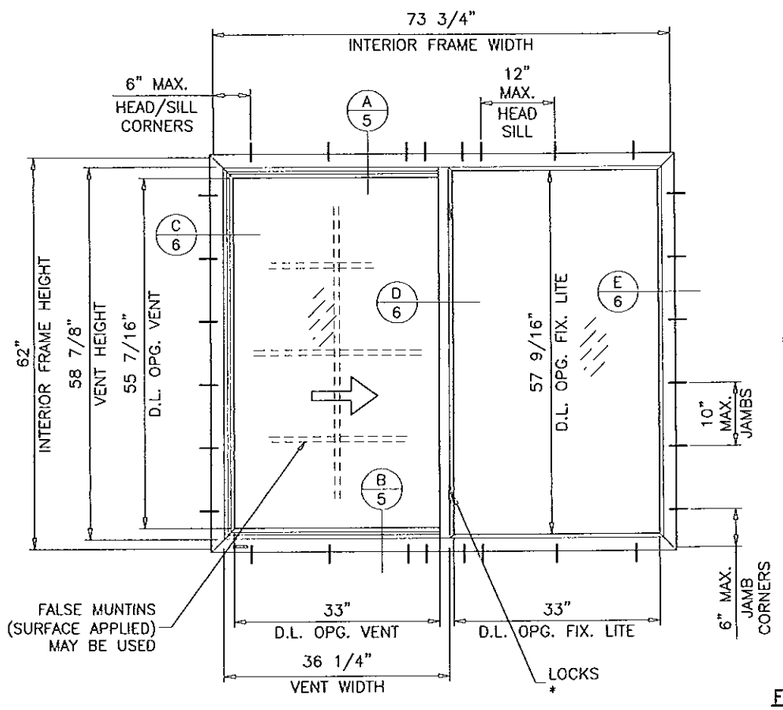

FLANGE FRAMES

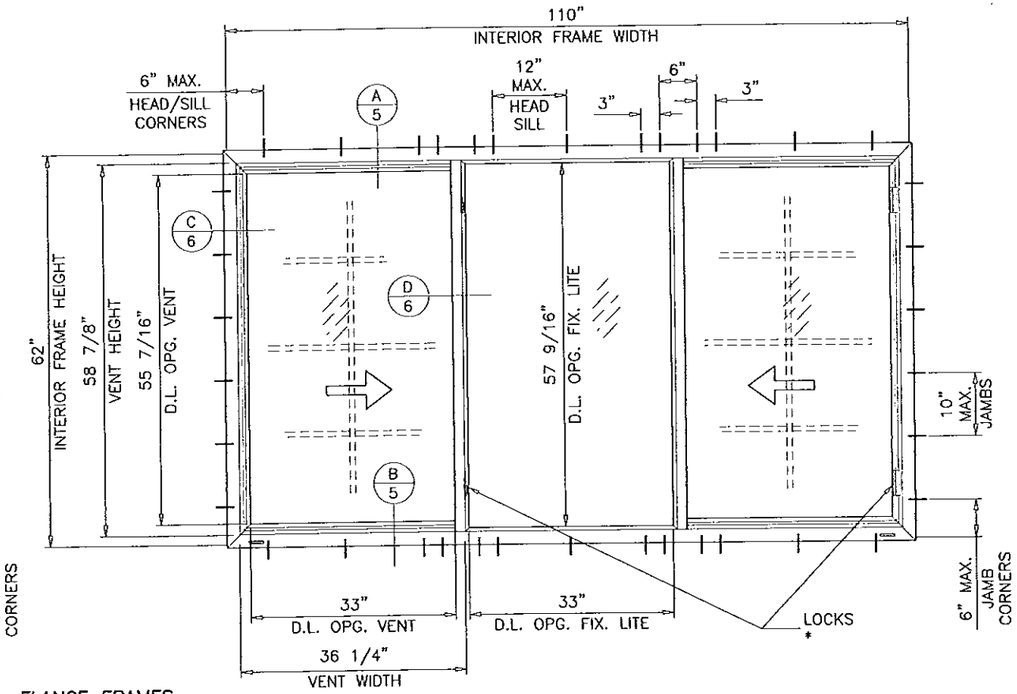

TYPICAL ELEVATIONS

* LOCKS
(1) PER VENT FOR WDW. HT. UPTO 25" AT MID HEIGHT
(2) PER VENT FOR WDW. HT. ABOVE 25"
AT 7" FROM TOP & BOTTOM

THESE WINDOWS ARE RATED FOR LARGE & SMALL MISSILE IMPACT. SHUTTERS ARE NOT REQUIRED.

SERIES 'TARGA 7200'
WHITE PVC HORIZONTAL ROLLER WINDOW

DESIGN LOAD RATINGS FOR THESE WINDOWS TO BE AS PER CHARTS SHOWN ON SHEET 3.

APPROVAL APPLIES TO SINGLE UNITS OR SIDE BY SIDE COMBINATIONS OF H.R./H.R. OR HORIZONTAL ROLLING WITH OTHER WINDOW TYPES IN MODULES OF TWO OR MORE WINDOWS USING MIAMI-DADE COUNTY APPROVED CLIPPED MULLIONS IN BETWEEN. LOWER DESIGN PRESSURE FROM WINDOWS OR MULLION APPROVAL WILL APPLY TO ENTIRE SYSTEM.

THIS PRODUCT HAS BEEN DESIGNED AND TESTED TO COMPLY WITH THE REQUIREMENTS OF THE FLORIDA BUILDING CODE INCLUDING HIGH VELOCITY HURRICANE ZONE (HVHZ).

WOOD BUCKS BY OTHERS, MUST BE ANCHORED PROPERLY TO TRANSFER LOADS TO THE STRUCTURE.

ANCHORS SHALL BE AS LISTED, SPACED AS SHOWN ON DETAILS, ANCHORS EMBEDMENT TO BASE MATERIAL SHALL BE BEYOND WALL DRESSING OR STUCCO.

ANCHORING OR LOADING CONDITIONS NOT SHOWN IN THESE DETAILS ARE NOT PART OF THIS APPROVAL.

A LOAD DURATION INCREASE IS USED IN DESIGN OF ANCHORS INTO WOOD ONLY.

ALL SHIMS TO BE HIGH IMPACT, NON-METALLIC AND NON-COMPRESSIBLE.

MATERIALS INCLUDING BUT NOT LIMITED TO STEEL/METAL SCREWS, THAT COME INTO CONTACT WITH OTHER DISSIMILAR MATERIALS SHALL MEET THE REQUIREMENTS OF THE FLORIDA BLDG. CODE.

DAYLITE OPENINGS:

$$\text{DLO WIDTH} = \frac{\text{INTERIOR FRAME WIDTH} - 7.750}{2}$$

DLO HEIGHT = INTERIOR FRAME HEIGHT − 6.562 (VENT)
= INTERIOR FRAME HEIGHT − 4.438 (FIXED LITE)

DAYLITE OPENINGS:

$$\text{DLO WIDTH} = \frac{\text{INTERIOR FRAME WIDTH} - 11}{3}$$

DLO HEIGHT = INTERIOR FRAME HEIGHT − 6.562 (VENT)
= INTERIOR FRAME HEIGHT − 4.438 (FIXED LITE)

INDEX OF DRAWING

SHEET NO.	DESCRIPTION
1	GENERAL NOTES, FLANGE FRAME ELEVATIONS
2	FLUSH FRAME AND FIN FRAME ELEVATIONS
3	WINDOWS CAPACITY CHARTS
4	GLAZING DETAILS
5 & 6	FLANGE FRAME DETAILS
7	FLUSH FRAME DETAILS
8	FIN FRAME DETAILS
9	BILL OF MATERIALS
10	EXTRUSION DETAILS
11	VENT AND FRAME CORNER CONSTRUCTION DETAILS

LAMINATED GLASS
INSULATING LAMINATED GLASS
LARGE & SMALL MISSILE IMPACT

Engr: JAVAD AHMAD
CIVIL
FLA. PE # 70592
C.A.N. 3588
NOV 3 2014

PRODUCT REVISED
as complying with the Florida
Building Code
Acceptance No 14-1204.09
Expiration Date Feb. 20, 2019
By Manuel Perez
Miami/Dade Product Control

AL-FAROOQ CORPORATION
ENGINEERS & PRODUCT DEVELOPMENT
1235 S.W. 87 AVE
MIAMI, FLORIDA 33174
TEL. (305) 264-8100 FAX. (305) 262-6978
COMP-ANL\W13-42CGI

SERIES 'TARGA 7200' PVC HORIZ. ROLLER WDW. (L.M.I./S.M.I.)

CGI WINDOWS & DOORS
10100 N.W. 25TH STREET
MIAMI, FL. 33172
TEL. (305) 593-6590 FAX. (305) 593-6592

revisions:

no	date	by	description
A	01.20.14		REV. PER RER COMMENTS
B	10.16.14		GENERAL REVISION

date: 07-30-13
scale: 1/2"=1'-0"
dr. by: HAMID
chk. by:

drawing no.
W13-42

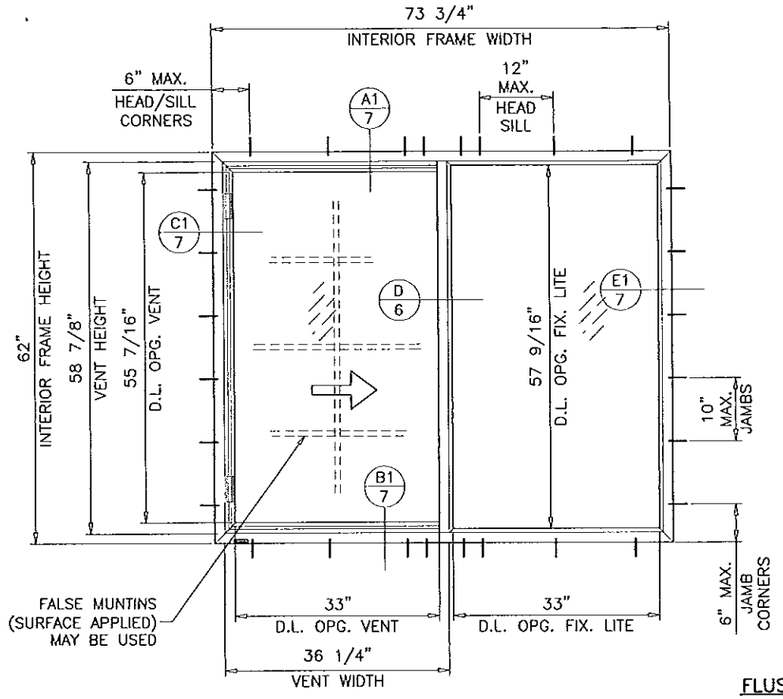

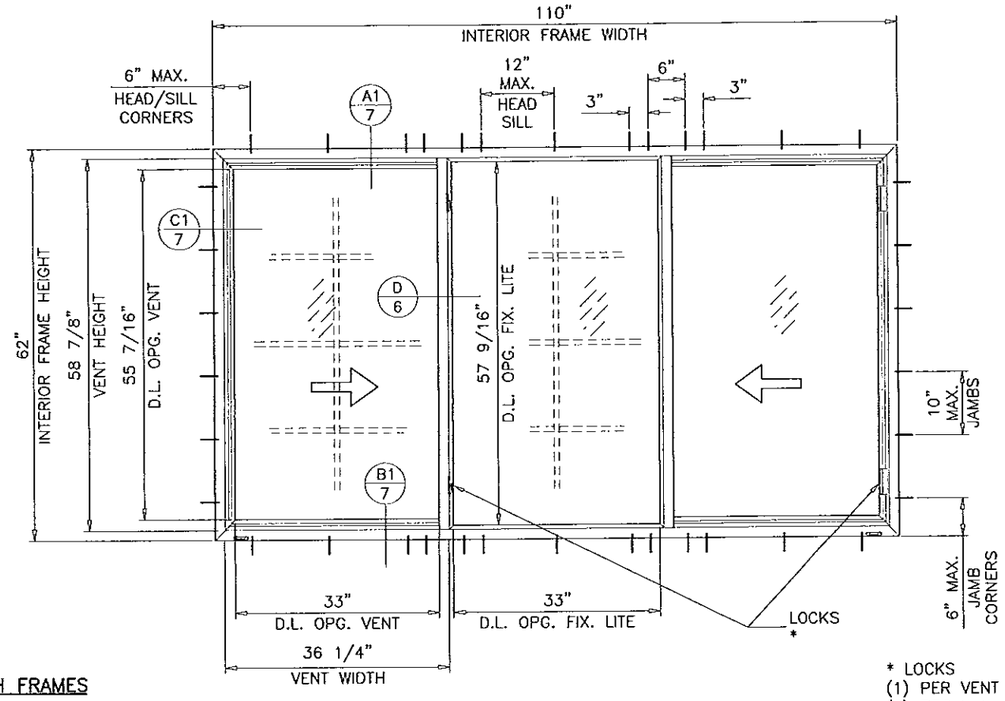

FLUSH FRAMES

* LOCKS
(1) PER VENT FOR WDW. HT. UPTO 25" AT MID HEIGHT
(2) PER VENT FOR WDW. HT. ABOVE 25"
AT 7" FROM TOP & BOTTOM

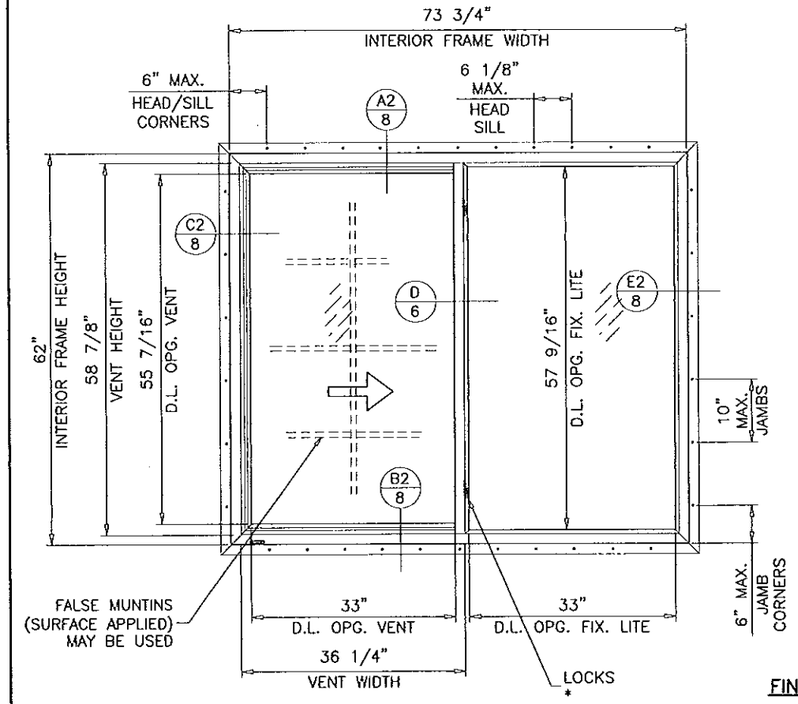

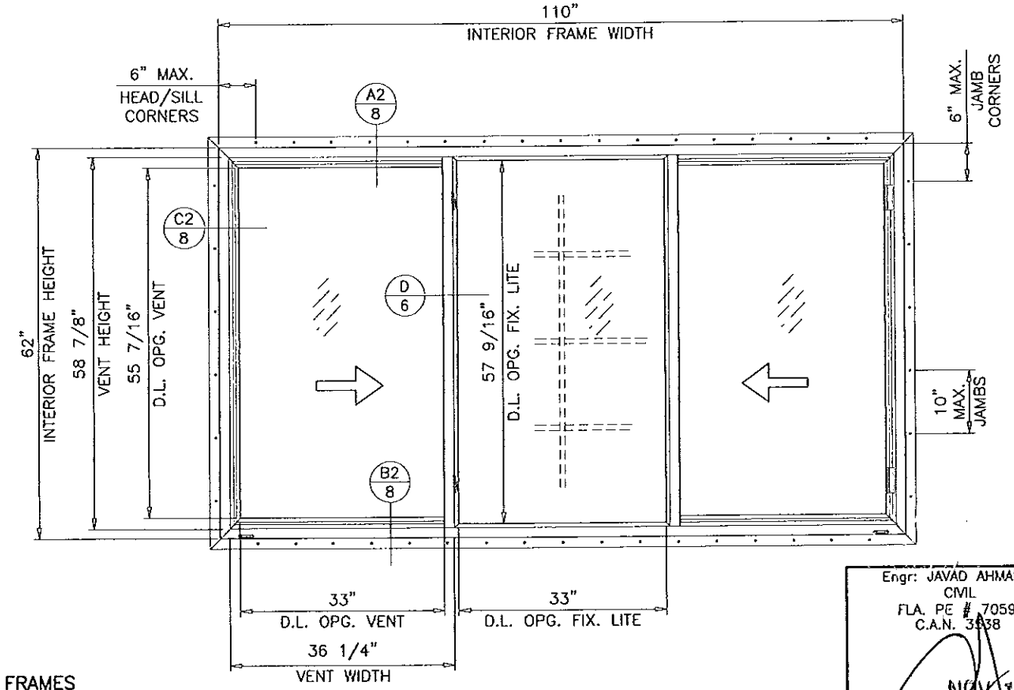

FIN FRAMES

TYPICAL ELEVATIONS

Engr: JAVAD AHMAD
CIVIL
FLA. PE # 70592
C.A.N. 3838

NOV 11 2014

PRODUCT REVISED
as complying with the Florida
Building Code
Acceptance No 14-1204.09
Expiration Date Feb 20, 2019
By Manuel Sera
Miami Dade Product Control

AL-FAROOQ CORPORATION
ENGINEERS & PRODUCT DEVELOPMENT
1235 S.W. 87 AVE
MIAMI, FLORIDA 33174
TEL. (305) 264-8100 FAX. (305) 262-6978

COMP-ANL\W13-42CGI

SERIES 'TARGA 7200' PVC HORIZ. ROLLER WDW. (L.M.I./S.M.I.)

CGI WINDOWS & DOORS
10100 N.W. 25TH STREET
MIAMI, FL. 33172
TEL. (305) 593-6590 FAX. (305) 593-6592

revisions:

no	date	by	description
A	01.20.14		REV. PER RER COMMENTS
B	10.16.14		GENERAL REVISION

date: 07-30-13
scale: -
dr. by: HAMID
chk. by:

drawing no.
W13-42

DESIGN LOAD CAPACITY – PSF (XO OR OX SIZES)

INTERIOR FRAME DIMENSIONS		GLASS TYPES 'A', 'A1', 'B', 'B1'		GLASS TYPES 'C', 'C1', 'D'	
WIDTH	HEIGHT	EXT.(+)	INT.(–)	EXT.(+)	INT.(–)
25–1/2"	25"	60.0	60.0	70.0	75.0
36"		60.0	60.0	70.0	75.0
52–1/8"		60.0	60.0	70.0	75.0
73–3/4"		60.0	60.0	70.0	75.0
25–1/2"	37–3/8"	60.0	60.0	70.0	75.0
36"		60.0	60.0	70.0	75.0
52–1/8"		60.0	60.0	70.0	75.0
73–3/4"		60.0	60.0	70.0	75.0
25–1/2"	49–5/8"	60.0	60.0	70.0	75.0
36"		60.0	60.0	70.0	75.0
52–1/8"		60.0	60.0	70.0	75.0
73–3/4"		60.0	60.0	70.0	75.0
25–1/2"	62"	60.0	60.0	70.0	75.0
36"		60.0	60.0	70.0	75.0
52–1/8"		60.0	60.0	70.0	75.0
73–3/4"		60.0	60.0	70.0	75.0
23"	23"	60.0	60.0	70.0	75.0
31"		60.0	60.0	70.0	75.0
47"		60.0	60.0	70.0	75.0
73"		60.0	60.0	70.0	75.0
23"	35"	60.0	60.0	70.0	75.0
31"		60.0	60.0	70.0	75.0
47"		60.0	60.0	70.0	75.0
73"		60.0	60.0	70.0	75.0
23"	47"	60.0	60.0	70.0	75.0
31"		60.0	60.0	70.0	75.0
47"		60.0	60.0	70.0	75.0
73"		60.0	60.0	70.0	75.0
23"	59"	60.0	60.0	70.0	75.0
31"		60.0	60.0	70.0	75.0
47"		60.0	60.0	70.0	75.0
73"		60.0	60.0	70.0	75.0

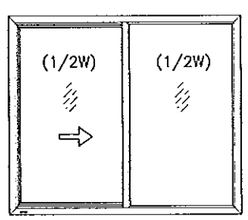

OPERATING VENT TO BE 1/2 OF THE WDW. WIDTH

'XO OR OX'

DESIGN LOAD CAPACITY – PSF (XO OR OX SIZES)

INTERIOR FRAME DIMENSIONS		GLASS TYPES 'A', 'A1', 'B', 'B1'		GLASS TYPES 'C', 'C1', 'D'	
WIDTH	HEIGHT	EXT.(+)	INT.(–)	EXT.(+)	INT.(–)
25–1/2"	25"	60.0	60.0	70.0	75.0
36"		60.0	60.0	70.0	75.0
52–1/8"		60.0	60.0	70.0	75.0
73–3/4"		60.0	60.0	70.0	75.0
25–1/2"	37–3/8"	60.0	60.0	70.0	75.0
36"		60.0	60.0	70.0	75.0
52–1/8"		60.0	60.0	70.0	75.0
73–3/4"		60.0	60.0	70.0	75.0
25–1/2"	49–5/8"	60.0	60.0	70.0	75.0
36"		60.0	60.0	70.0	75.0
52–1/8"		60.0	60.0	70.0	75.0
73–3/4"		–	–	60.0	60.0
25–1/2"	62"	60.0	60.0	70.0	75.0
36"		60.0	60.0	70.0	75.0
52–1/8"		60.0	60.0	70.0	75.0
73–3/4"		–	–	60.0	60.0
23"	23"	60.0	60.0	70.0	75.0
31"		60.0	60.0	70.0	75.0
47"		60.0	60.0	70.0	75.0
73"		60.0	60.0	70.0	75.0
23"	35"	60.0	60.0	70.0	75.0
31"		60.0	60.0	70.0	75.0
47"		60.0	60.0	70.0	75.0
73"		60.0	60.0	70.0	75.0
23"	47"	60.0	60.0	70.0	75.0
31"		60.0	60.0	70.0	75.0
47"		60.0	60.0	70.0	75.0
73"		–	–	60.0	60.0
23"	59"	60.0	60.0	70.0	75.0
31"		60.0	60.0	70.0	75.0
47"		60.0	60.0	70.0	75.0
73"		–	–	60.0	60.0

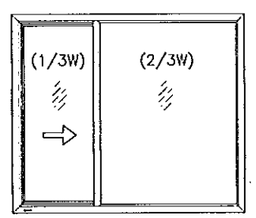

OPERATING VENT TO BE 1/3 OF THE WDW. WIDTH

'XO OR OX'

DESIGN LOAD CAPACITY – PSF (XOX SIZES)

INTERIOR FRAME DIMENSIONS		GLASS TYPES 'A', 'A1', 'B', 'B1'		GLASS TYPES 'C', 'C1', 'D'	
WIDTH	HEIGHT	EXT.(+)	INT.(–)	EXT.(+)	INT.(–)
73"	25"	60.0	60.0	70.0	75.0
105–1/4"		60.0	60.0	70.0	75.0
110"		60.0	60.0	70.0	75.0
73"	37–3/8"	60.0	60.0	70.0	75.0
105–1/4"		60.0	60.0	70.0	75.0
110"		60.0	60.0	70.0	75.0
73"	49–5/8"	60.0	60.0	70.0	75.0
105–1/4"		60.0	60.0	70.0	75.0
110"		60.0	60.0	70.0	75.0
73"	62"	60.0	60.0	70.0	75.0
105–1/4"		60.0	60.0	70.0	75.0
110"		60.0	60.0	70.0	75.0
65"	23"	60.0	60.0	70.0	75.0
77"		60.0	60.0	70.0	75.0
91"		60.0	60.0	70.0	75.0
101"		60.0	60.0	70.0	75.0
107"		60.0	60.0	70.0	75.0
65"	35"	60.0	60.0	70.0	75.0
77"		60.0	60.0	70.0	75.0
91"		60.0	60.0	70.0	75.0
101"		60.0	60.0	70.0	75.0
107"		60.0	60.0	70.0	75.0
65"	47"	60.0	60.0	70.0	75.0
77"		60.0	60.0	70.0	75.0
91"		60.0	60.0	70.0	75.0
101"		60.0	60.0	70.0	75.0
107"		60.0	60.0	70.0	75.0
65"	59"	60.0	60.0	70.0	75.0
77"		60.0	60.0	70.0	75.0
91"		60.0	60.0	70.0	75.0
101"		60.0	60.0	70.0	75.0
107"		60.0	60.0	70.0	75.0

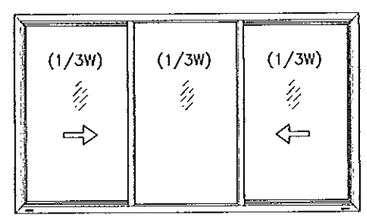

OPERATING VENTS TO BE 1/3 OF THE WDW. WIDTH

'XOX'

DESIGN LOAD CAPACITY – PSF (XOX SIZES)

INTERIOR FRAME DIMENSIONS		GLASS TYPES 'A', 'A1', 'B', 'B1'		GLASS TYPES 'C', 'C1', 'D'	
WIDTH	HEIGHT	EXT.(+)	INT.(–)	EXT.(+)	INT.(–)
73"	25"	60.0	60.0	70.0	75.0
105–1/4"		60.0	60.0	70.0	75.0
110"		60.0	60.0	70.0	75.0
73"	37–3/8"	60.0	60.0	70.0	75.0
105–1/4"		60.0	60.0	70.0	75.0
110"		60.0	60.0	70.0	75.0
73"	49–5/8"	60.0	60.0	70.0	75.0
105–1/4"		–	–	60.0	60.0
110"		–	–	60.0	60.0
73"	62"	60.0	60.0	70.0	75.0
105–1/4"		–	–	60.0	60.0
110"		–	–	60.0	60.0
65"	23"	60.0	60.0	70.0	75.0
77"		60.0	60.0	70.0	75.0
91"		60.0	60.0	70.0	75.0
101"		60.0	60.0	70.0	75.0
65"	35"	60.0	60.0	70.0	75.0
77"		60.0	60.0	70.0	75.0
91"		60.0	60.0	70.0	75.0
101"		60.0	60.0	70.0	75.0
65"	47"	60.0	60.0	70.0	75.0
77"		60.0	60.0	70.0	75.0
91"		60.0	60.0	70.0	75.0
101"		–	–	60.0	60.0
65"	59"	60.0	60.0	70.0	75.0
77"		60.0	60.0	70.0	75.0
91"		–	–	60.0	60.0
101"		–	–	60.0	60.0

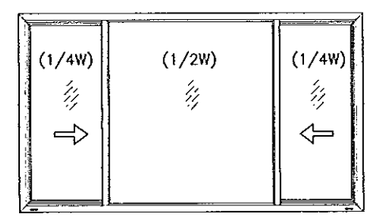

OPERATING VENTS TO BE 1/4 OF THE WDW. WIDTH

'XOX'

NOTE:
GLASS CAPACITIES ON THIS SHEET ARE BASED ON ASTM E1300–09 (3 SEC. GUSTS) AND FLORIDA BUILDING COMMISSION DECLARATORY STATEMENT DCA05–DEC–219

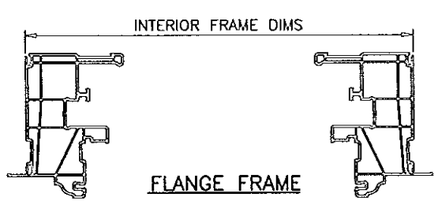

FLANGE FRAME

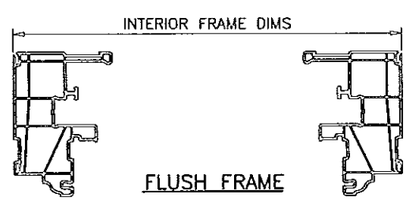

FLUSH FRAME

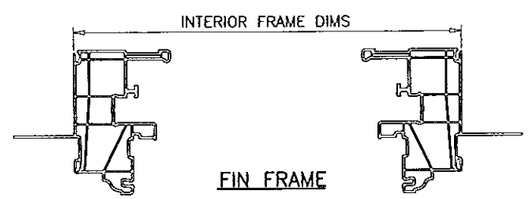

FIN FRAME

Engr: JAVAD AHMAD
CIVIL
FLA. PE # 70592
C.A.N. 3538
NOV 11 2014

PRODUCT REVISED
as complying with the Florida Building Code
Acceptance No 14-1204.09
Expiration Date Feb. 20, 2019
By Manuel Perez
Miami Dade Product Control

AL-FAROOQ CORPORATION
ENGINEERS & PRODUCT DEVELOPMENT
1235 S.W. 87 AVE
MIAMI, FLORIDA 33174
TEL. (305) 264-8100 FAX. (305) 262-6978
COMP–ANL\W13–42CGI

SERIES 'TARGA 7200' PVC HORIZ. ROLLER WDW. (L.M.I./S.M.I.)

CGI WINDOWS & DOORS
10100 N.W. 25TH STREET
MIAMI, FL. 33172
TEL. (305) 593–6590 FAX. (305) 593–6592

revisions:

no	date	by	description
A	01.20.14		NO CHANGE THIS SHEET
B	10.16.14		GENERAL REVISION

date: 07–30–13
scale: –
dr. by: HAMID
chk. by:

drawing no. W13–42

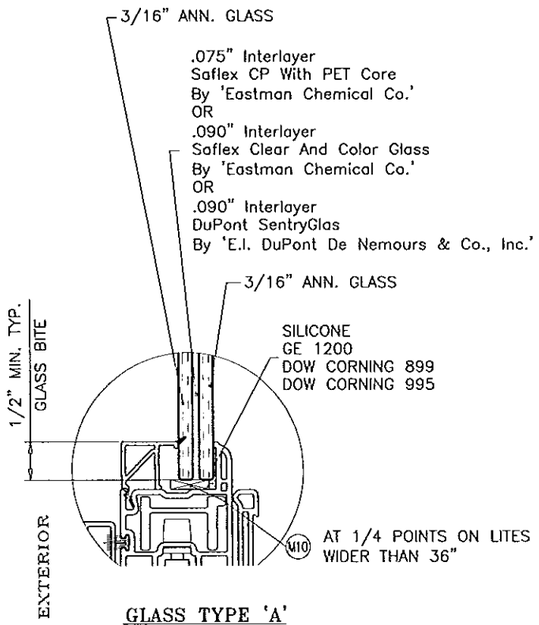

GLASS TYPE 'A'
7/16" OVERALL LAM. GLASS

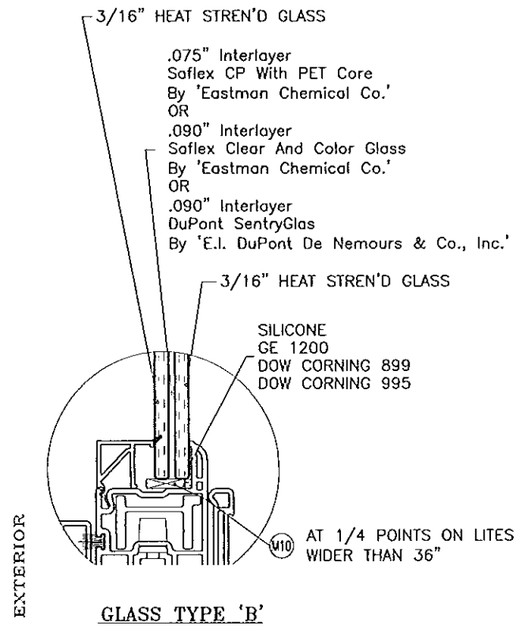

GLASS TYPE 'B'
7/16" OVERALL LAM. GLASS

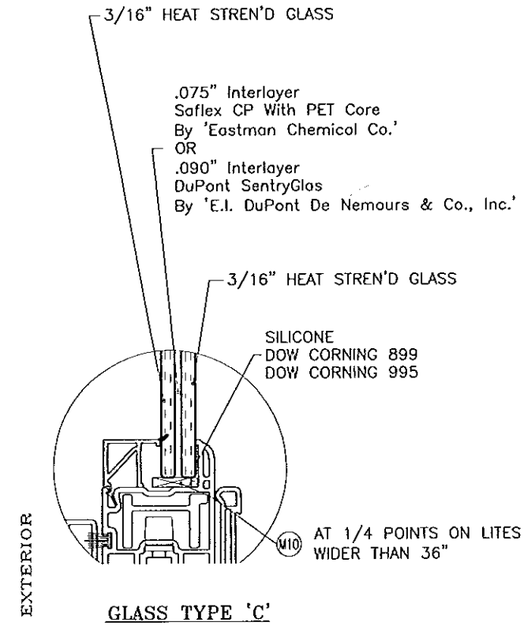

GLASS TYPE 'C'
7/16" OVERALL LAM. GLASS

(L.M.I & S.M.I.)

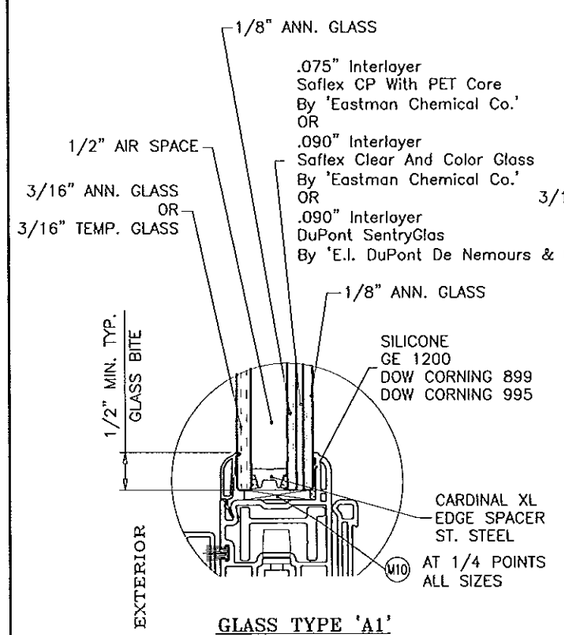

GLASS TYPE 'A1'
1" OVERALL INSUL. LAM. GLASS

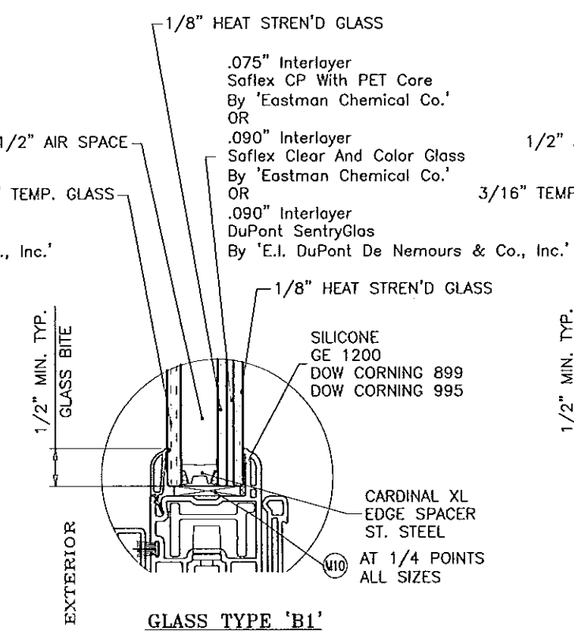

GLASS TYPE 'B1'
1" OVERALL INSUL. LAM. GLASS

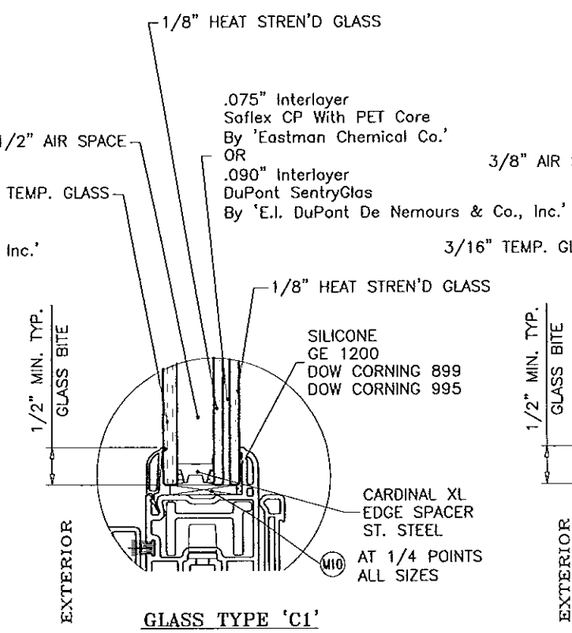

GLASS TYPE 'C1'
1" OVERALL INSUL. LAM. GLASS

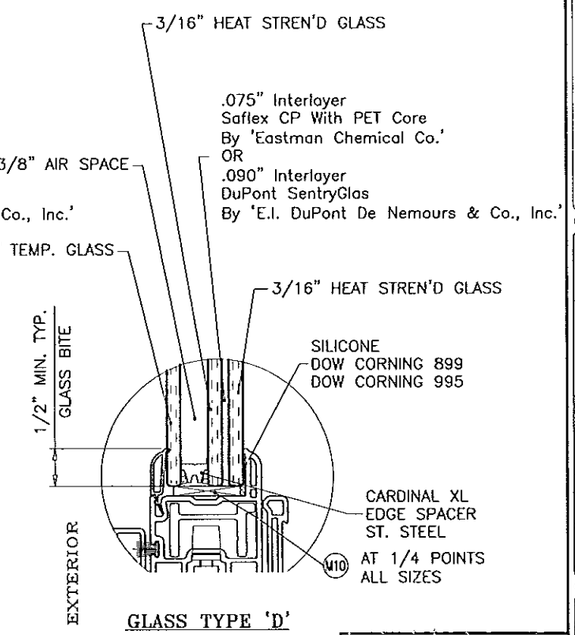

GLASS TYPE 'D'
1" OVERALL INSUL. LAM. GLASS

(L.M.I ONLY)

(S.M.I.)
IN ORDER TO QUALIFY FOR SMALL MISSILE IMPACT RATING
EXTERIOR PLY OF GLASS TYPE 'A1' MUST BE TEMPERED.

PRODUCT REVISED
as complying with the Florida
Building Code
Acceptance No 14-1204.09
Expiration Date Feb. 20, 2019
By Manuel Sera
Miami Dade Product Control

Engr: JAVAD AHMAD
CIVIL
FLA. PE # 70592
C.A.N. 3538
NOV 14 2014

AL-FAROOQ CORPORATION
ENGINEERS & PRODUCT DEVELOPMENT
1235 S.W. 87 AVE
MIAMI, FLORIDA 33174
TEL. (305) 264-8100 FAX. (305) 262-6978

COMP-ANL\W13-42CGI

SERIES 'TARGA 7200' PVC HORIZ. ROLLER WDW. (L.M.I./S.M.I.)

CGI WINDOWS & DOORS
10100 N.W. 25TH STREET
MIAMI, FL. 33172
TEL. (305) 593-6590 FAX. (305) 593-6592

revisions:

no	date	by	description
A	01.20.14		REV. PER RER COMMENTS
B	10.16.14		GENERAL REVISION

date: 07-30-13
scale: 1/2" = 1"
dr. by: HAMID
chk. by:

drawing no.
W13-42

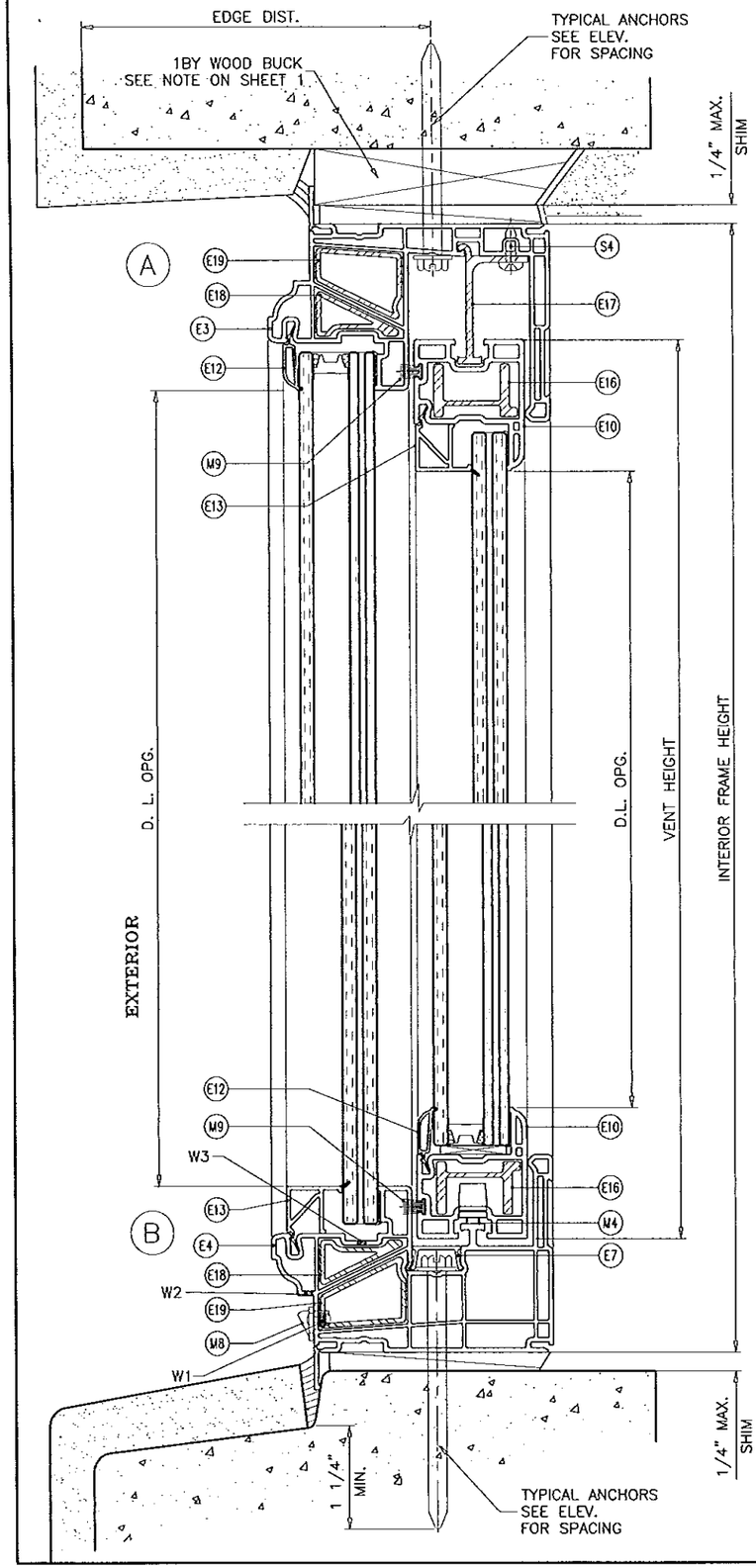

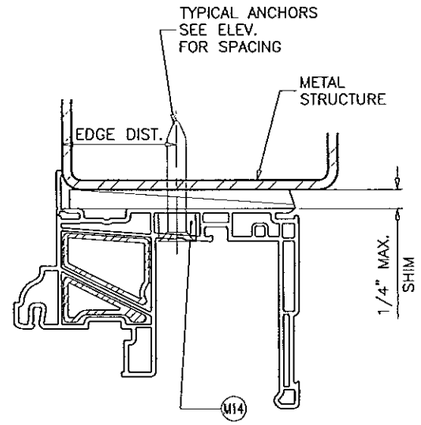

FLAT HEAD WITH BUSHING REQUIRED AT HEAD ABOVE FIXED LITE ONLY ON ALL STRUCTURE TYPES.

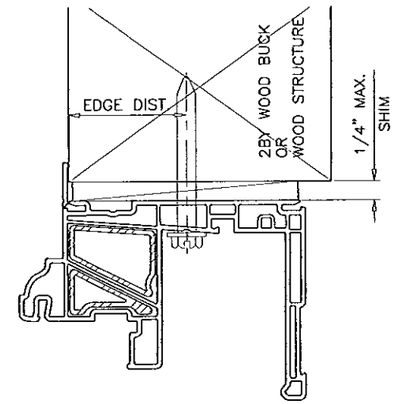

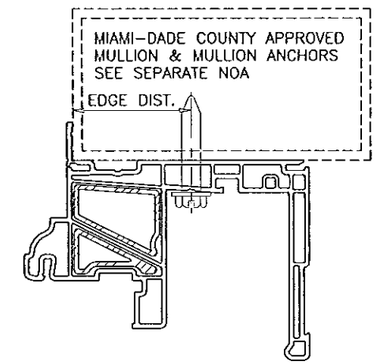

WOOD BUCKS AND METAL STRUCTURE NOT BY CGI WDW. MUST SUSTAIN LOADS IMPOSED BY GLAZING SYSTEM AND TRANSFER THEM TO THE BUILDING STRUCTURE.

WEEPHOLES:

W1 = 1/4" X 1-1/2" WEEP SLOT AT 4-1/8" FROM EACH END WITH PLASTIC COVER

W2 = 1/8" X 1/2" WEEP SLOT AT 3-1/4" FROM EACH END

W3 = 1/8" X 1/2" WEEP SLOT AT 3-1/4" FROM EACH END

SEALANTS:

ALL JOINTS AND FRAME CONNECTIONS SEALED WITH SILICONE SEALANT.

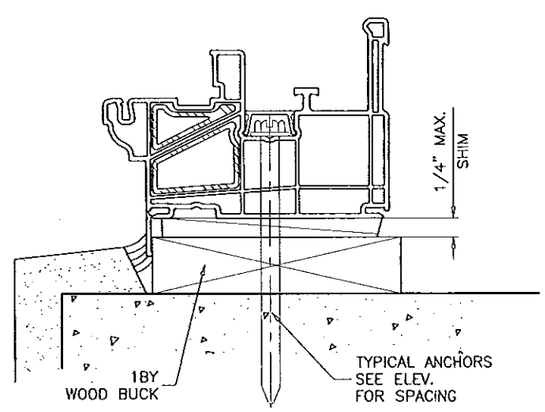

TYPICAL ANCHORS: SEE ELEV. FOR SPACING

1/4" DIA. TAPCON BY 'ITW' (Fu=125 KSI, Fy=100 KSI)

1/4" DIA. ULTRACON BY 'ELCO' (Fu=177 KSI, Fy=155 KSI)

1/4" DIA. AGGRE-GATOR BY 'ELCO' (Fu=95 KSI, Fy=57 KSI)

INTO 2BY WOOD BUCKS OR WOOD STRUCTURES
1-1/2" MIN. PENETRATION INTO WOOD

THRU 1BY BUCKS INTO CONC. OR MASONRY
1-1/4" MIN. EMBED INTO CONCRETE (HEAD/SILL)
1-1/4" MIN. EMBED INTO CONC. OR MASONRY (JAMBS)

DIRECTLY INTO CONC. OR MASONRY
1-1/4" MIN. EMBED INTO CONCRETE (HEAD/SILL)
1-1/4" MIN. EMBED INTO CONC. OR MASONRY (JAMBS)

#14 SMS OR SELF DRILLING SCREWS (GRADE 2 CRS)

INTO MIAMI-DADE COUNTY APPROVED MULLIONS (MIN. THK. = 1/8")

INTO METAL STRUCTURES
STEEL : 12 GA. MIN. (Fy = 36 KSI MIN.)
ALUMINUM : 1/8" THK. MIN. (6063-T5 MIN.)

TYPICAL EDGE DISTANCE

INTO CONCRETE AND MASONRY = 2-1/2" MIN.
INTO WOOD STRUCTURE = 1" MIN.
INTO METAL STRUCTURE = 3/4" MIN.

WOOD AT HEAD, SILL OR JAMBS SG = 0.55 MIN.
CONCRETE AT HEAD, SILL OR JAMBS f'c = 3000 PSI MIN.
C-90 HOLLOW/FILLED BLOCK AT JAMBS f'm = 2000 PSI MIN.

FLANGE FRAMES

Engr: JAVAD AHMAD
CIVIL
FLA. PE # 70592
C.A.N. 3538

NOV 17 2014

PRODUCT REVISED
as complying with the Florida Building Code
Acceptance No 14-1204.09
Expiration Date Feb. 20, 2019
By Manuel Perez
Miami Dade Product Control

AL-FAROOQ CORPORATION
ENGINEERS & PRODUCT DEVELOPMENT
1235 S.W. 87 AVE
MIAMI, FLORIDA 33174
TEL. (305) 264-8100 FAX. (305) 262-6978

COMP-ANL\W13-42CGI

SERIES "TARGA 7200" PVC HORIZ. ROLLER WDW. (L.M.I./S.M.I.)

CGI WINDOWS & DOORS
10100 N.W. 25TH STREET
MIAMI, FL. 33172
TEL. (305) 593-6590 FAX. (305) 593-6592

revisions:

no	date	by	description
A	01.20.14		REV. PER RER COMMENTS
B	10.16.14		GENERAL REVISION

date: 07-30-13
scale: 1/2" = 1"
dr. by: HAMID
chk. by:

drawing no.
W13-42

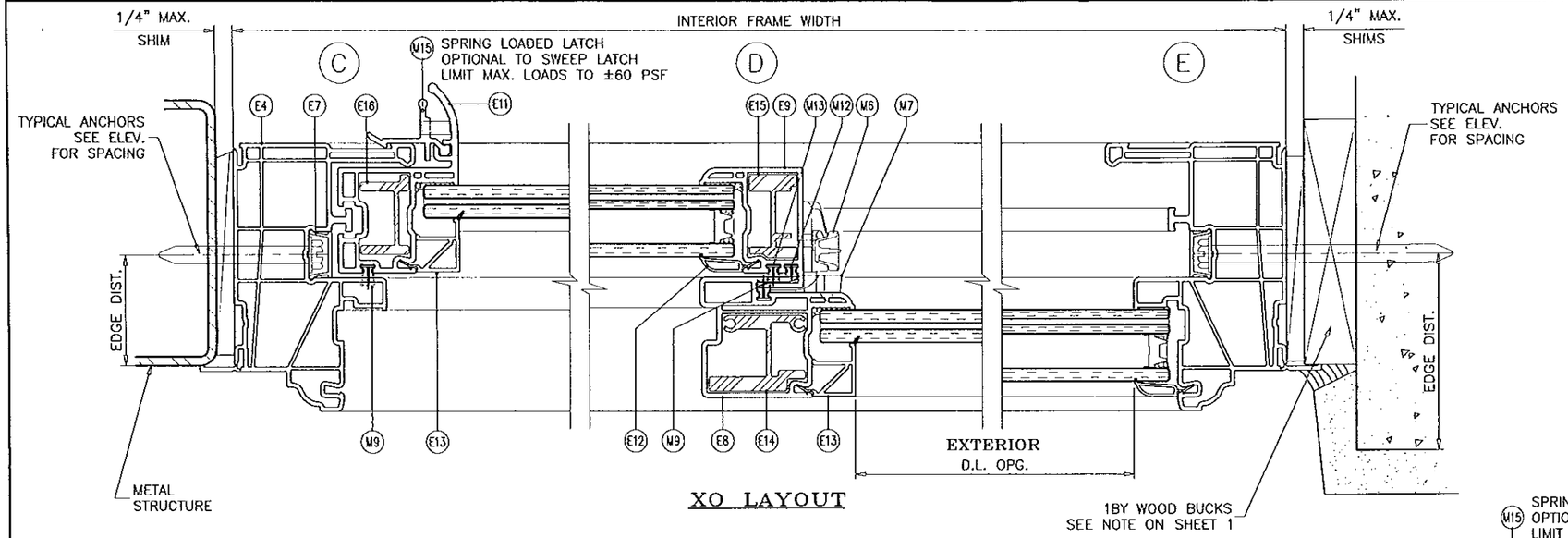

XO LAYOUT

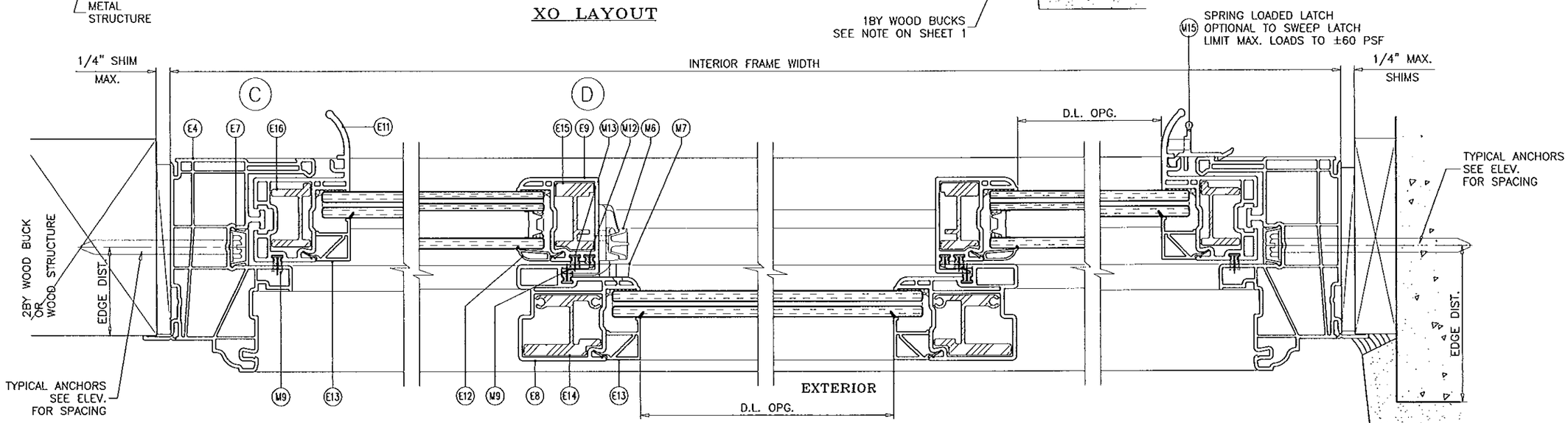

XOX LAYOUT

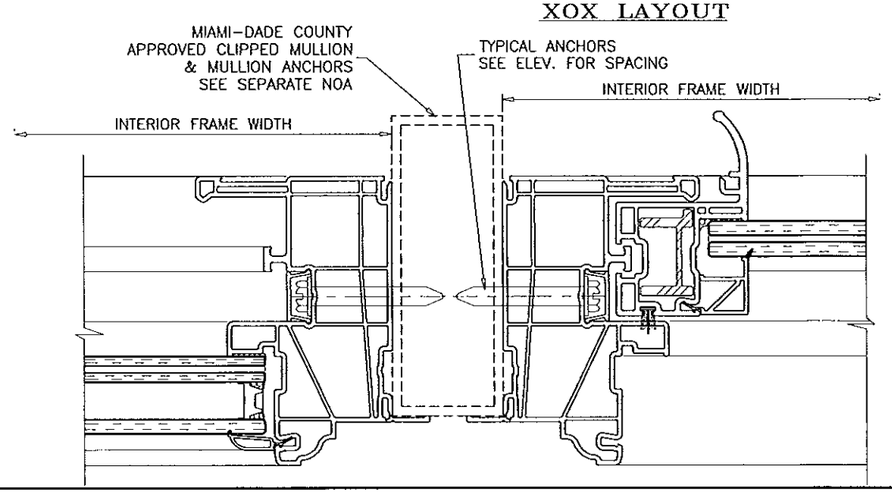

Engr: JAVAD AHMAD
CIVIL
FLA. PE # 70592
C.A.N. 3538

NOV 11 2014

PRODUCT REVISED
as complying with the Florida
Building Code
Acceptance No 14-1204.09
Expiration Date Feb. 20, 2019
By Manuel Perez
Miami Dade Product Control

AL-FAROOQ CORPORATION
ENGINEERS & PRODUCT DEVELOPMENT
1235 S.W. 87 AVE
MIAMI, FLORIDA 33174
TEL (305) 264-8100 FAX. (305) 262-6978
COMP-ANL\W13-42CGI

SERIES "TARGA 7200" PVC HORIZ. ROLLER WDW. (L.M.I./S.M.I.)

CGI WINDOWS & DOORS
10100 N.W. 25TH STREET
MIAMI, FL. 33172
TEL. (305) 593-6590 FAX. (305) 593-6592

revisions:

no	date	by	description
A	01.20.14		REV. PER RER COMMENTS
B	10.16.14		GENERAL REVISION

date: 07-30-13
scale: 1/2" = 1"
dr. by: HAMID
chk. by:

drawing no.
W13-42

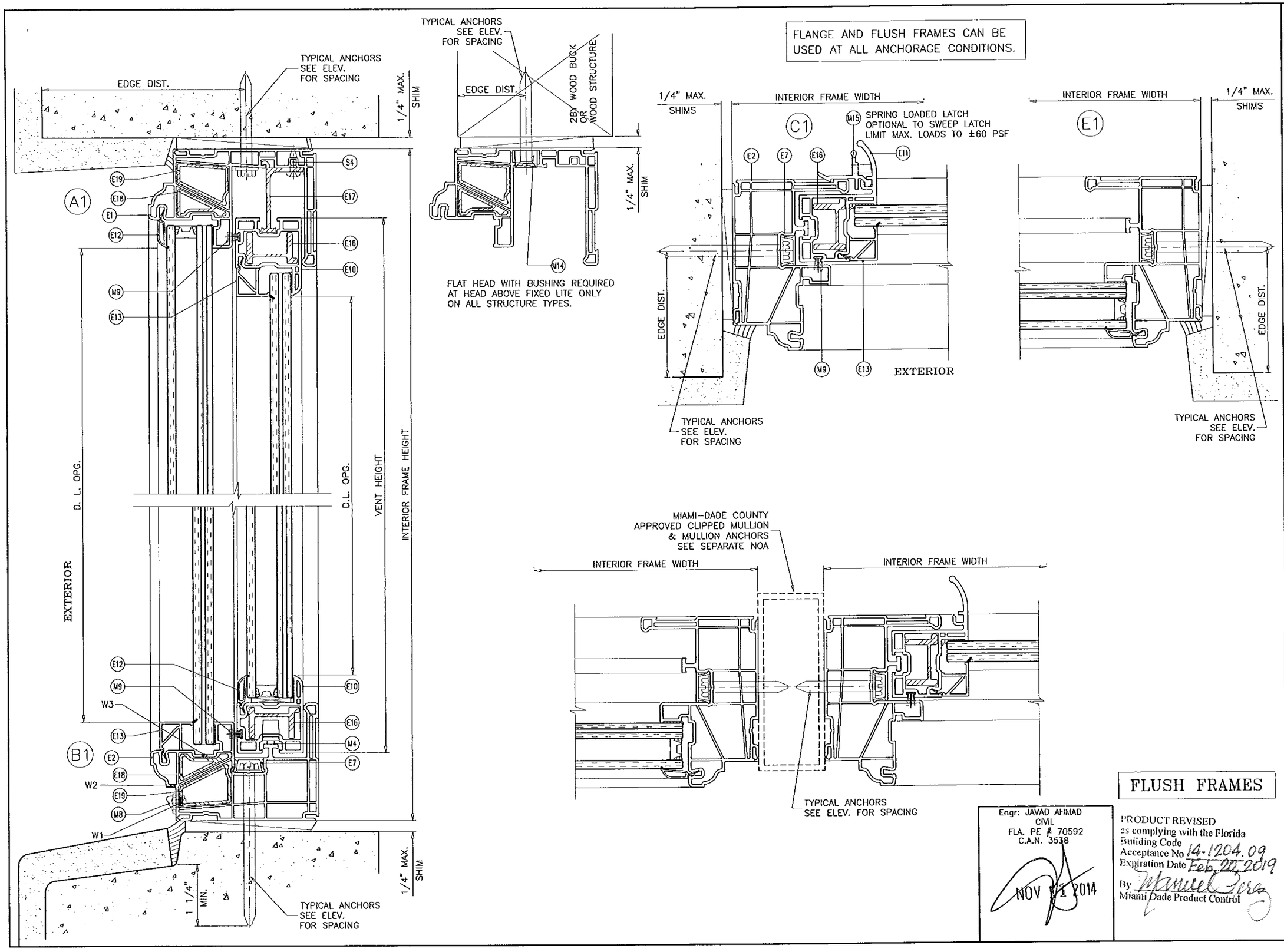

FLUSH FRAMES

Engr: JAVAD AHMAD
CIVIL
FLA. PE # 70592
C.A.N. 3538
NOV 11 2014

PRODUCT REVISED
as complying with the Florida Building Code
Acceptance No 14-1204.09
Expiration Date Feb. 20, 2019
By Manuel Perez
Miami Dade Product Control

AL-FAROOQ CORPORATION
ENGINEERS & PRODUCT DEVELOPMENT
1235 S.W. 87 AVE
MIAMI, FLORIDA 33174
TEL. (305) 264-8100 FAX. (305) 262-6978
COMP-ANL\W13-42CGI

SERIES "TARGA 7200" PVC HORIZ. ROLLER WDW. (L.M.I./S.M.I.)
CGI WINDOWS & DOORS
10100 N.W. 25TH STREET
MIAMI, FL. 33172
TEL. (305) 593-6590 FAX. (305) 593-6592

revisions:

no	date	by	description
A	01.20.14		REV. PER RER COMMENTS
B	10.16.14		GENERAL REVISION

date: 07-30-13
scale: 1/2" = 1"
dr. by: HAMID
chk. by:

drawing no. W13-42

sheet 7 of 11

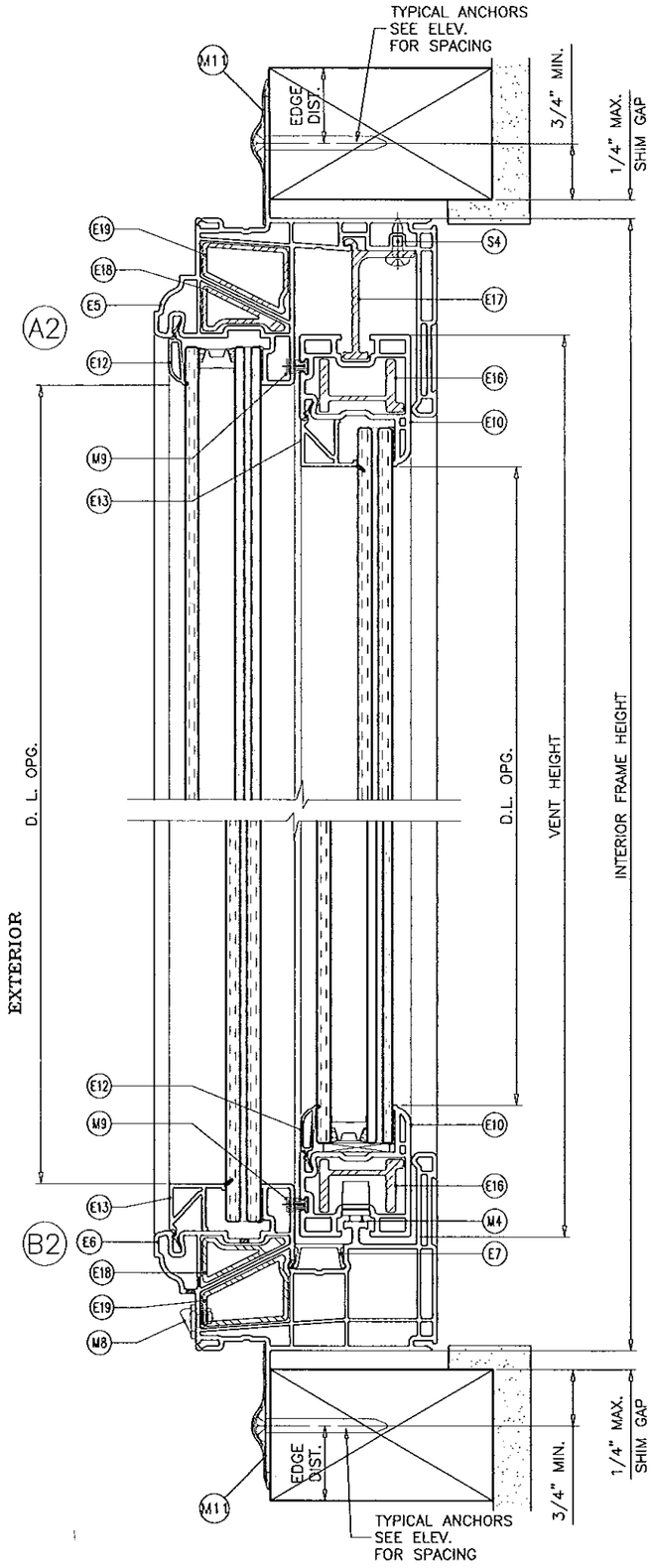

TYPICAL ANCHORS:

FIN FRAMES: SEE ELEV. FOR SPACING

#8 SMS/WOOD SCREWS (GRADE 2 CRS)

INTO 2BY WOOD BUCKS OR WOOD STRUCTURES
1-1/4" MIN. PENETRATION INTO WOOD
3/4" MIN. EDGE DISTANCE

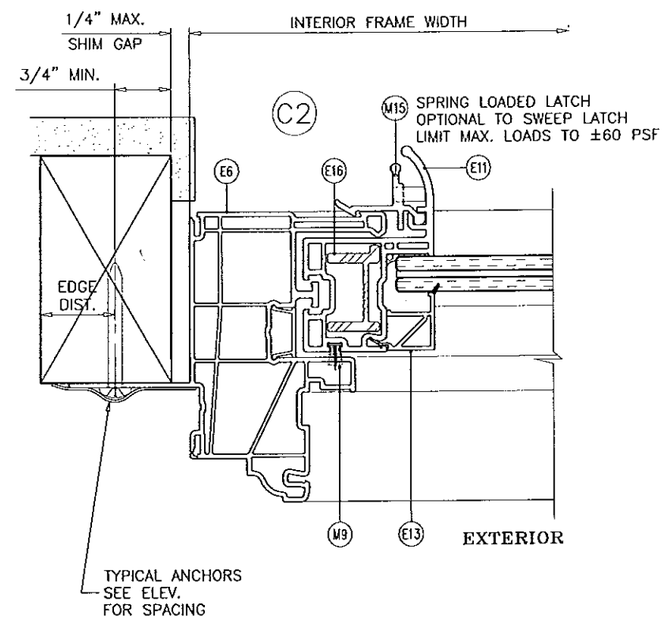

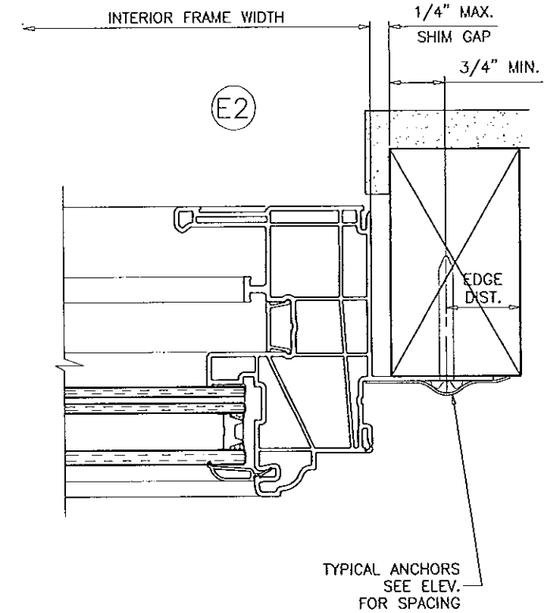

Engr: JAVAD AHMAD
CIVIL
FLA. PE # 70592
C.A.N. 3538

NOV 1 2014

FIN FRAMES

PRODUCT REVISED
as complying with the Florida
Building Code
Acceptance No 14-1004.09
Expiration Date Feb. 27, 2019
By Manuel Perez
Miami Dade Product Control

AL-FAROOQ CORPORATION
ENGINEERS & PRODUCT DEVELOPMENT
1235 S.W. 87 AVE
MIAMI, FLORIDA 33174
TEL. (305) 264-8100 FAX. (305) 262-6978

COMP-ANL\W13-42CGI

SERIES TARGA 7200' PVC HORIZ. ROLLER WDW. (L.M.I./S.M.I.)

CGI WINDOWS & DOORS
10100 N.W. 25TH STREET
MIAMI, FL. 33172
TEL. (305) 593-6590 FAX. (305) 593-6592

revisions:

no	date	by	description
A	01.20.14		REV. PER RER COMMENTS
B	10.16.14		GENERAL REVISION

date: 07-30-13
scale: 1/2" = 1"
dr. by: HAMID
chk. by:

drawing no.
W13-42

CODE	PART No.	DESCRIPTION	MATERIAL	MANUF.	REMARKS
E1	CGI-1009	EQUAL LEG FRAME HEAD	PVC	DECEUNINCK NORTH AMERICA LLC.	
E2	CGI-1002	EQUAL LEG FRAME JAMB / SILL	PVC	DECEUNINCK NORTH AMERICA LLC.	
E3	CGI-1016	FLANGE FRAME HEAD	PVC	DECEUNINCK NORTH AMERICA LLC.	
E4	CGI-1015	FLANGE FRAME JAMB / SILL	PVC	DECEUNINCK NORTH AMERICA LLC.	
E5	CGI-1021	FIN FRAME HEAD	PVC	DECEUNINCK NORTH AMERICA LLC.	
E6	CGI-1020	FIN FRAME JAMB / SILL	PVC	DECEUNINCK NORTH AMERICA LLC.	
E7	CGI-1003	SCREW COVER	PVC	DECEUNINCK NORTH AMERICA LLC.	
E8	CGI-1004	FIXED MEETING STILE	PVC	DECEUNINCK NORTH AMERICA LLC.	
E9	CGI-1005	LOCK STILE	PVC	DECEUNINCK NORTH AMERICA LLC.	
E10	CGI-1010	TOP / BOTTOM RAIL	PVC	DECEUNINCK NORTH AMERICA LLC.	
E11	CGI-1007	JAMB STILE	PVC	DECEUNINCK NORTH AMERICA LLC.	
E12	CGI-1008	IG GLAZING BEAD	PVC	DECEUNINCK NORTH AMERICA LLC.	
E13	CGI-1025	7/16" MONOLITHIC GLAZING BEAD	PVC	DECEUNINCK NORTH AMERICA LLC.	
E14	CGI-802	FIXED MTG. STILE REINFORCEMENT	6005A-T5	CGI EXTRUDER	
E15	CGI-807	LOCK STILE REINFORCEMENT	6005A-T5	CGI EXTRUDER	
E16	CGI-800	TOP/BTOOM RAIL & JAMB STILE REINFORCEMENT	6005A-T5	CGI EXTRUDER	
E17	CGI-803	HEAD TRACK	6005A-T5	CGI EXTRUDER	
E18	CGI-1026	FRAME REINFORCEMENT SMALL	6005A-T5	CGI EXTRUDER	6" LONG AT MTG. STILE LOCATION
E19	CGI-1027	FRAME REINFORCEMENT LARGE	6005A-T5	CGI EXTRUDER	6" LONG AT MTG. STILE LOCATION
M1	SCS 1200	GLAZING SILICONE (1/2" X 3/16" BEAD)	SILICONE	GENERAL ELECTRIC	
M2	DOW 995	GLAZING SILICONE (1/2" X 3/16" BEAD)	SILICONE	DOW CORNING	
M3	DOW 899	GLAZING SILICONE (1/2" X 3/16" BEAD)	SILICONE	DOW CORNING	
M4	70-10001	ROLLER	NYLON/SS	SULLIVAN OR EQUIV	
M6	70-10044	SWEEP LOCK	-	CGI CUSTOM	ATTACHED WITH (2) #6 X 3/4" FH SMS
M7	70-10045	KEEPER	-	CGI CUSTOM	ATTACHED WITH (2) #6 X 3/4" FH SMS
M8	146-1A	WEEP HOLE COVERS	PVC	CGI-CUSTOM	
M9	W43291NW	.187 x .290 WEATHERSTRIP PILE W/ CENTER FIN	WOOL	ULTRAFAB	
M10	-	SETTING BLOCK, 2 PER LITE	EPDM	-	DUROMETER 85±5
M11		PROTECTO WRAP WATERPROOFING OR EQUIV.			AT FIN FRAME
M12	W2315NW	.187 x .150 WEATHERSTRIP PILE W/ CENTER FIN	WOOL	ULTRAFAB	
M13	W23221NG	.187 x .220 WEATHERSTRIP PILE W/ CENTER FIN	WOOL	ULTRAFAB	
M14	71-10047	ANCHOR BUSHING	NYLON	CGI-CUSTOM	REQD. WITH FLAT HEAD ANCHORS AT FIX. LITE ONLY
M15	70-10002	SPRING LOADED LOCK, 4" LONG	6063-T5	CGI CUSTOM	-
S3		#8 X 3" TRUSS HEAD SMS - MEETING RAIL ATTACHEMENT		4 PER MTG RAIL	
S4		#8 X 1/2" PAN HEAD SMS - HEAD TRACK			
S5		#6 X 3/4" FLAT HEAD SMS - SWEEP LOCK/KEEPER			

WHITE PVC EXTRUSIONS TO BE LABELED WITH AAMA EXTRUDER CODE, EXTRUDER NAME, CITY, STATE AND 'MDCA'.

Engr: JAVAD AHMAD
CIVIL
FLA. PE # 70592
C.A.N. 3538

NOV 11 2014

PRODUCT REVISED
as complying with the Florida
Building Code
Acceptance No 14-1204.09
Expiration Date Feb. 20, 2019
By Manuel Perez
Miami Dade Product Control

AL-FAROOQ CORPORATION
ENGINEERS & PRODUCT DEVELOPMENT
1235 S.W. 87 AVE
MIAMI, FLORIDA 33174
TEL. (305) 264-8100 FAX. (305) 262-6978

COMP-ANL\W13-42CGI

SERIES "TARGA 7200" PVC HORIZ. ROLLER WDW. (L.M.I./S.M.I.)

CGI WINDOWS & DOORS
10100 N.W. 25TH STREET
MIAMI, FL. 33172
TEL. (305) 593-6590 FAX. (305) 593-6592

revisions:

no	date	by	description
A	01.20.14		REV. PER RER COMMENTS
B	10.16.14		GENERAL REVISION

date: 07-30-13
scale: 1/2" = 1"
dr. by: HAMID
chk. by:

drawing no.
W13-42

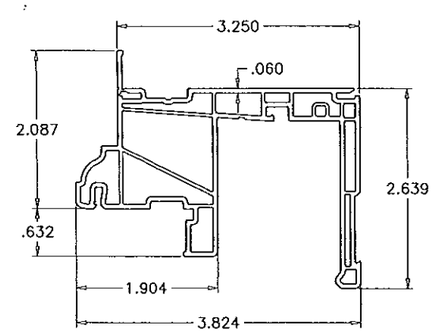

E3 FLANGE FRAME HEAD

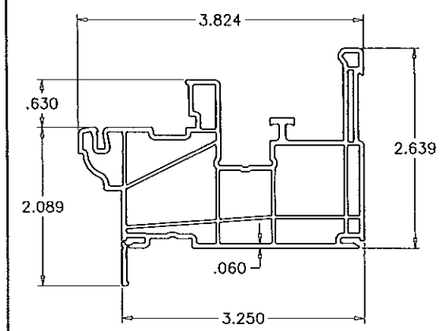

E4 FLANGE FRAME JAMB/SILL

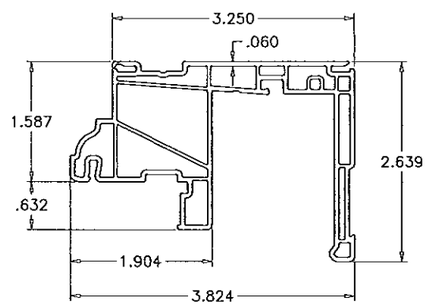

E1 FLUSH FRAME HEAD

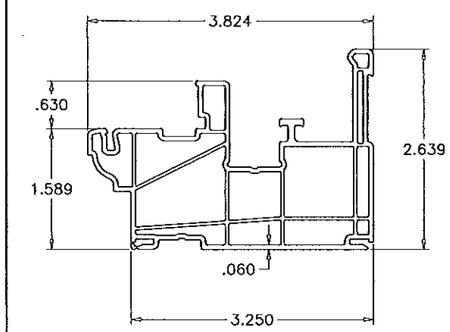

E2 FLUSH FRAME JAMB/SILL

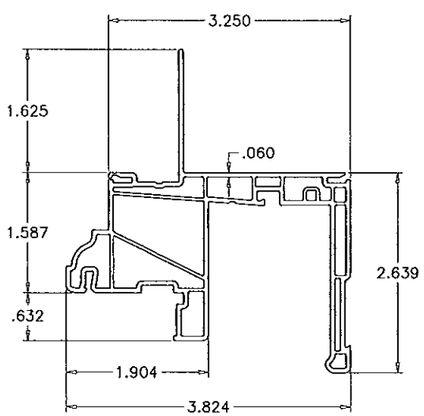

E5 FIN FRAME HEAD

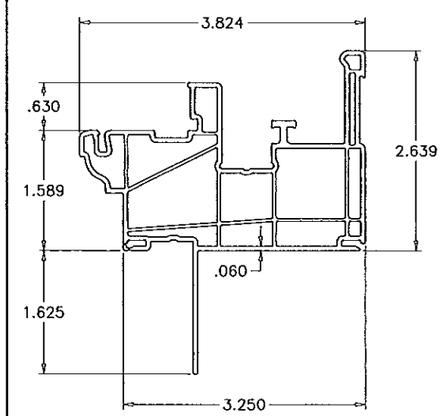

E6 FIN FRAME JAMB/SILL

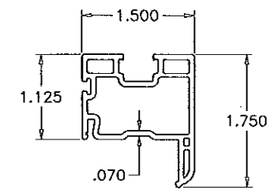

E10 VENT TOP/BOTTOM RAIL

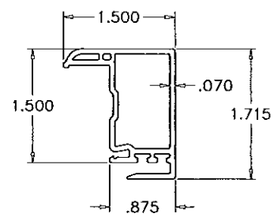

E9 LOCK STILE

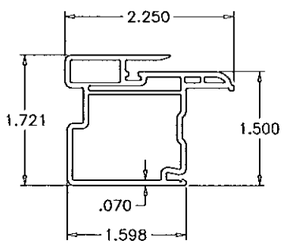

E8 FIXED STILE

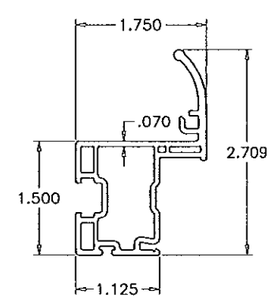

E11 JAMB STILE

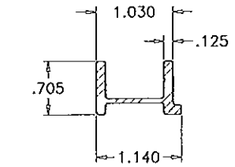

E16 TOP/BOTTOM RAIL REINFORCING
JAMB STILE REINFORCING

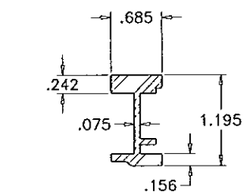

E15 LOCK STILE REINFORCING

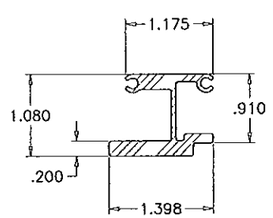

E14 FIXED STILE REINFORCING

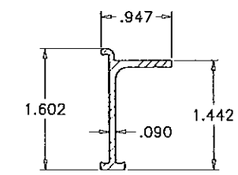

E17 HEAD TRACK

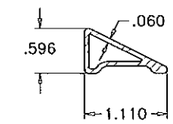

E18 FRAME REINF. SMALL

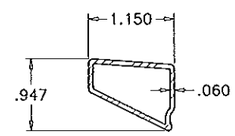

E19 FRAME REINF. LARGE

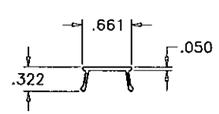

E7 SCREW COVER

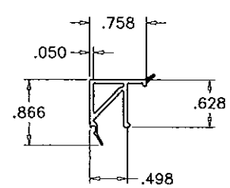

E13 GLAZING BEAD (LAM. GLASS)

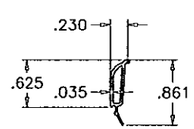

E12 GLAZING BEAD (INSUL. LAM. GLASS)

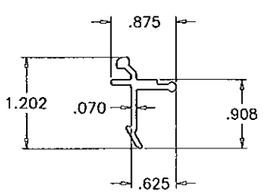

M15 SPRING LOADED LATCH

Engr: JAVAD AHMAD
CIVIL
FLA. PE # 70592
C.A.N. 3538

NOV 11 2014

PRODUCT REVISED
as complying with the Florida
Building Code
Acceptance No 14-1204.09
Expiration Date Feb. 20, 2019
By Manuel Perez
Miami-Dade Product Control

AL-FAROOQ CORPORATION
ENGINEERS & PRODUCT DEVELOPMENT
1235 S.W. 87 AVE
MIAMI, FLORIDA 33174
TEL. (305) 264-8100 FAX. (305) 262-6978

COMP-ANL\W13-42CGI

SERIES 'TARGA 7200' PVC HORIZ. ROLLER WDW. (L.M.I./S.M.I.)

CGI WINDOWS & DOORS
10100 N.W. 25TH STREET
MIAMI, FL. 33172
TEL. (305) 593-6590 FAX. (305) 593-6592

revisions:

no	date	by	description
A	01.20.14		REV. PER RER COMMENTS
B	10.16.14		GENERAL REVISION

date: 07-30-13
scale: 1/2" = 1"
dr. by: HAMID
chk. by:

drawing no.
W13-42

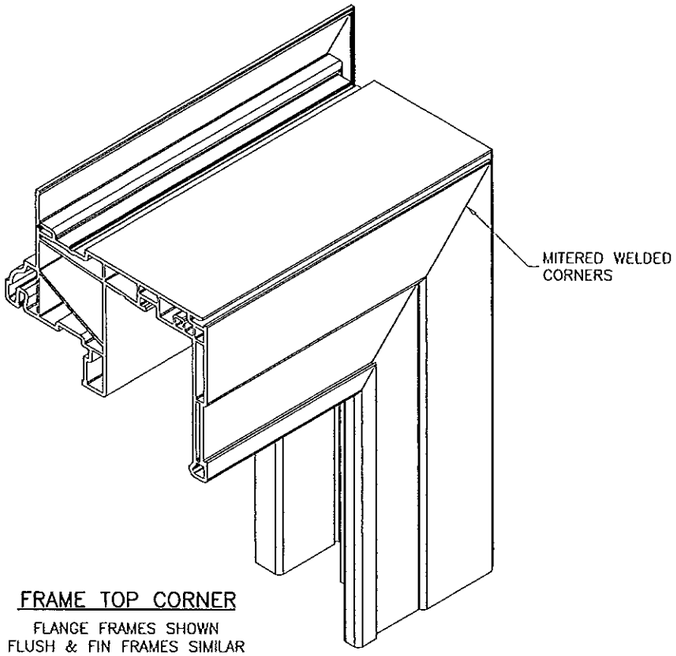

FRAME TOP CORNER

FLANGE FRAMES SHOWN
FLUSH & FIN FRAMES SIMILAR

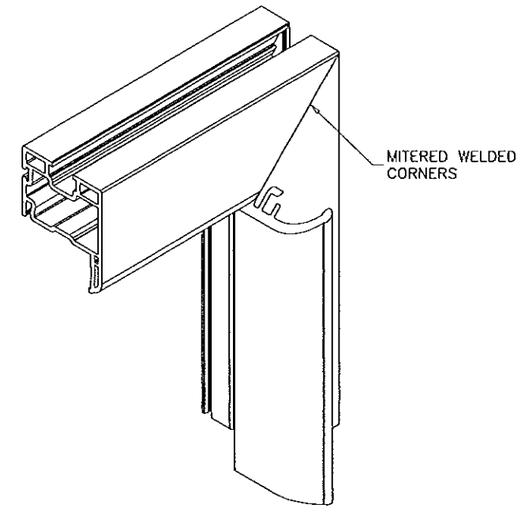

VENT TOP/BOTTOM CORNER

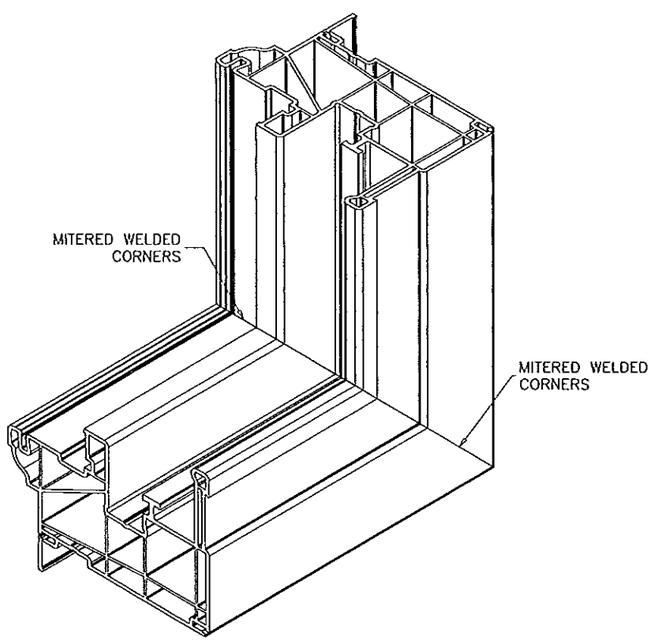

FRAME BOTTOM CORNER

FLANGE FRAMES SHOWN
FLUSH & FIN FRAMES SIMILAR

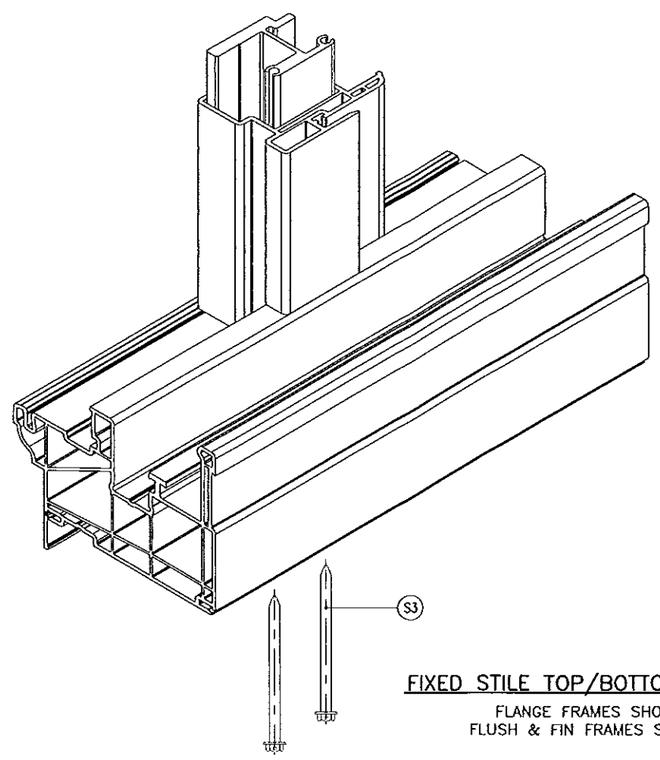

FIXED STILE TOP/BOTTOM CORNER

FLANGE FRAMES SHOWN
FLUSH & FIN FRAMES SIMILAR

Engr: JAVAD AHMAD
CIVIL
FLA. PE # 70592
C.A.N. 3538

NOV 11 2014

PRODUCT REVISED
as complying with the Florida
Building Code
Acceptance No 14-1204.09
Expiration Date Feb 20, 2019
By Manuel Perez
Miami Dade Product Control

AL-FAROOQ CORPORATION
ENGINEERS & PRODUCT DEVELOPMENT
1235 S.W. 87 AVE
MIAMI, FLORIDA 33174
TEL. (305) 264-8100 FAX. (305) 262-6978

COMP-ANL\W13-42CGI

SERIES "TARGA 7200" PVC HORIZ. ROLLER WDW. (L.M.L./S.M.L.)

CGI WINDOWS & DOORS
10100 N.W. 25TH STREET
MIAMI, FL. 33172
TEL. (305) 593-6590 FAX. (305) 593-6592

revisions:

no	date	by	description
A	01.20.14		NO CHANGE THIS SHEET
B	10.16.14		GENERAL REVISION

date: 07-30-13
scale: 1/2" = 1"
dr. by: HAMID
chk. by:

drawing no.
W13-42

sheet 11 of 11