MIAMI-DADE COUNTY
DEPARTMENT OF REGULATORY AND ECONOMIC RESOURCES (RER)
BOARD AND CODE ADMINISTRATION DIVISION

MIAMI-DADE COUNTY
PRODUCT CONTROL SECTION
11805 SW 26 Street, Room 208
T (786) 315-2590 F (786) 315-2599
www.miamidade.gov/economy

NOTICE OF ACCEPTANCE (NOA)

HWD Acquisition, Inc. dba Hurd Windows & Doors
575 South Whelen Avenue
Medford, WI 54451

SCOPE:

This NOA is being issued under the applicable rules and regulations governing the use of construction materials. The documentation submitted has been reviewed and accepted by Miami-Dade County RER - Product Control Section to be used in Miami Dade County and other areas where allowed by the Authority Having Jurisdiction (AHJ).

This NOA shall not be valid after the expiration date stated below. The Miami-Dade County Product Control Section (In Miami Dade County) and/or the AHJ (in areas other than Miami Dade County) reserve the right to have this product or material tested for quality assurance purposes. If this product or material fails to perform in the accepted manner, the manufacturer will incur the expense of such testing and the AHJ may immediately revoke, modify, or suspend the use of such product or material within their jurisdiction. RER reserves the right to revoke this acceptance, if it is determined by Miami-Dade County Product Control Section that this product or material fails to meet the requirements of the applicable building code.

This product is approved as described herein, and has been designed to comply with the Florida Building Code, including the High Velocity Hurricane Zone.

DESCRIPTION: Clipped, Extruded Aluminum Tube Mullion – L.M.I.

APPROVAL DOCUMENT: Drawing No. **1047A**, titled "Clipped Impact & Non-Impact Aluminum Tube Mullions, sheets 1 through 6 of 6, dated 07/24/01, with revision **B1** dated 10/05/11, prepared by W. W. Schaefer Engineering & Consulting, P.A., signed and sealed by Warren W. Schaefer, P.E., bearing the Miami-Dade County Product Control Revision stamp with the Notice of Acceptance number and expiration date by the Miami-Dade County Product Control Section.

MISSILE IMPACT RATING: Large and Small Missile Impact Resistant

LABELING: Each unit shall bear a permanent label with the manufacturer's name or logo, city, state, model/series, and following statement: "Miami-Dade County Product Control Approved", unless otherwise noted herein.

RENEWAL of this NOA shall be considered after a renewal application has been filed and there has been no change in the applicable building code negatively affecting the performance of this product.

TERMINATION of this NOA will occur after the expiration date or if there has been a revision or change in the materials, use, and/or manufacture of the product or process. Misuse of this NOA as an endorsement of any product, for sales, advertising or any other purposes shall automatically terminate this NOA. Failure to comply with any section of this NOA shall be cause for termination and removal of NOA.

ADVERTISEMENT: The NOA number preceded by the words Miami-Dade County, Florida, and followed by the expiration date may be displayed in advertising literature. If any portion of the NOA is displayed, then it shall be done in its entirety.

INSPECTION: A copy of this entire NOA shall be provided to the user by the manufacturer or its distributors and shall be available for inspection at the job site at the request of the Building Official.

This NOA **revises NOA# 11-1021.16** and consists of this page 1 and evidence page E-1, as well as approval document mentioned above.

The submitted documentation was reviewed by **Manuel Perez, P.E.**

MIAMI-DADE COUNTY APPROVED

MP 3/25/15

HWD Acquisition, Inc. dba Hurd Windows & Doors

NOTICE OF ACCEPTANCE: EVIDENCE SUBMITTED

A. DRAWINGS

1. Manufacturer's die drawings and sections.
2. Drawing No **1047A**, titled "Clipped Impact & Non-Impact Aluminum Tube Mullions, sheets 1 through 6 of 6, dated 07/24/01, with revision B1 dated 10/05/11, prepared by W. W. Schaefer Engineering & Consulting, P.A., signed and sealed by Warren W. Schaefer, P.E. ***(Submitted under previous NOA #11-1021.16)***

B. TESTS

1. Test reports on: 1) Air Infiltration Test, per FBC, TAS 202-94
   2) Uniform Static Air Pressure Test, Loading per FBC TAS 202-94
   3) Water Resistance Test, per FBC, TAS 202-94
   4) Large Missile Impact Test per FBC, TAS 201-94
   5) Cyclic Wind Pressure Loading per FBC, TAS 203-94
   6) Forced Entry Test, per FBC 2411 3.2.1, TAS 202-94

   along with marked–up drawings and installation diagram of clipped aluminum mullions, prepared by Certified Testing Laboratory, Inc., Test Reports No. **CTLA-679WB** & **CTLA-679WF**, both dated 10/02/01 with addendum letters dated 11/29/01 and 12/18/01, all signed and sealed by Ramesh Patel, P.E.
   (Submitted under NOA No. 01-1012.04)

C. CALCULATIONS:

1. Anchor Calculations and structural analysis, complying with the FBC-2007 and the FBC-2010, prepared by W. W. Schaefer Engineering & Consulting, P.A., dated 10/04/11, signed and sealed by Warren W. Schaefer, P.E.
   (Submitted under previous NOA #11-1021.16)

D. QUALITY ASSURANCE

1. Miami-Dade Department of Regulatory and Economic Resources (RER).

E. MATERIAL CERTIFICATIONS

1. None.

F. STATEMENTS

1. Statement letter of conformance, complying with **FBC-2010** and **FBC-5th Edition (2014)**, dated December 18, 2014, issued by W. W. Schaefer Engineering & Consulting, P.A., signed and sealed by Warren W. Schaefer, P.E.
2. Statement letter of no financial interest, dated December 18, 2014, issued by W. W. Schaefer Engineering & Consulting, P.A., signed and sealed by Warren W. Schaefer, P.E.

G. OTHERS

1. Notice of Acceptance No. **11-1021.16**, issued to HWD Acquisition, Inc. dba Hurd Windows & Doors for their Clipped Aluminum Tube Mullions - Impact, approved on 02/02/12 and expiring on 02/14/17.

Manuel Perez, P.E.
Product Control Examiner
NOA No. 14-1224.01
Expiration Date: February 14, 2017
Approval Date: April 02, 2015

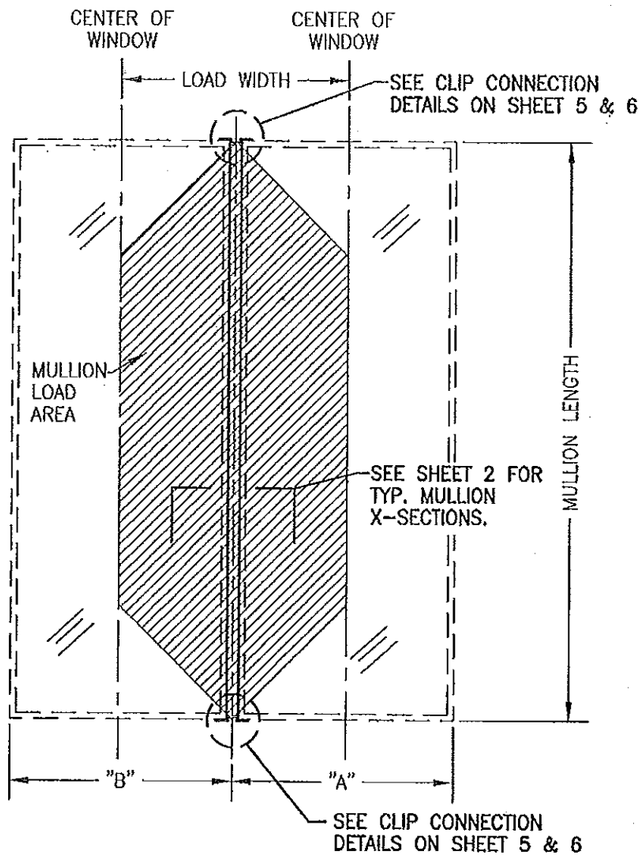

FIXED WINDOW TO FIXED WINDOW

LOAD WIDTH = (A + B)/2

NOTE: "FIXED WINDOW" MAY BE A SASH GLAZED FIXED OR A DIRECT GLAZED FIXED WINDOW UNDER SEPERATE APPROVAL.

NOTE: MULLION MAY BE HORIZONTAL OR VERTICAL.

FIXED WINDOW TO FIXED WINDOW TABLE

LENGTH (IN.)	LOAD WIDTH (IN.) A+B/2	ALLOWABLE PRESSURES (PSF) 4X1X1/8 TUBE CONN. "A"	4X1X1/8 TUBE CONN. "B"	4X2X1/8 TUBE CONN. "A"	4X2X1/8 TUBE CONN. "B"	5X2X1/8 TUBE CONN. "A"	5X2X1/8 TUBE CONN. "B"
60	54	100.0	100.0	100.0	100.0	100.0	100.0
	60	97.5	97.5	100.0	100.0	100.0	100.0
	66	97.5	97.5	100.0	100.0	100.0	100.0
	72	97.5	97.5	100.0	100.0	100.0	100.0
66	42	100.0	100.0	100.0	100.0	100.0	100.0
	48	91.6	91.6	100.0	100.0	100.0	100.0
	54	81.4	81.4	100.0	100.0	100.0	100.0
	60	73.3	73.3	100.0	100.0	100.0	100.0
	66	66.6	66.6	97.3	97.3	100.0	100.0
	72	66.6	66.6	100.0	100.0	100.0	100.0
72	24	100.0	100.0	100.0	100.0	100.0	100.0
	30	100.0	100.0	100.0	100.0	100.0	100.0
	36	94.1	94.1	100.0	100.0	100.0	100.0
	42	80.6	80.6	100.0	100.0	100.0	100.0
	48	70.6	70.6	100.0	100.0	100.0	100.0
	54	62.7	62.7	91.6	91.6	100.0	100.0
	60	56.4	56.4	82.5	82.5	100.0	96.7
	66	51.3	51.3	75.0	75.0	100.0	94.7
	72	47.0	47.0	68.7	68.7	100.0	94.0
84	24	88.9	88.9	100.0	100.0	100.0	100.0
	30	71.1	71.1	100.0	100.0	100.0	100.0
	36	59.2	59.2	86.5	86.5	100.0	100.0
	42	50.8	50.8	74.2	74.2	100.0	100.0
	48	44.4	44.4	64.9	64.9	100.0	95.2
	54	39.5	39.5	57.7	57.7	100.0	89.1
	60	35.5	35.5	51.9	51.9	90.8	84.6
	66	32.3	32.3	47.2	47.2	82.6	81.5
	72	29.6	29.6	43.3	43.3	75.7	75.7
96	24	59.5	59.5	87.0	87.0	100.0	100.0
	30	47.6	47.6	69.6	69.6	100.0	100.0
	36	39.7	39.7	58.0	58.0	100.0	97.6
	42	34.0	34.0	49.7	49.7	86.9	86.9
	48	29.8	29.8	43.5	43.5	76.0	76.0
	54	26.5	26.5	38.7	38.7	67.6	67.6
	60	–	–	34.8	34.8	60.8	60.8
	66	–	–	31.6	31.6	55.3	55.3
	72	–	–	29.0	29.0	50.7	50.7

ALL ALUMINUM TUBES SHALL BE 6061-T6 OR 6005-T5 ALUMINUM

FIXED WINDOW TO FIXED WINDOW TABLE

LENGTH (IN.)	LOAD WIDTH (IN.) A+B/2	ALLOWABLE PRESSURES (PSF) 4X1X1/8 TUBE CONN. "A"	4X1X1/8 TUBE CONN. "B"	4X2X1/8 TUBE CONN. "A"	4X2X1/8 TUBE CONN. "B"	5X2X1/8 TUBE CONN. "A"	5X2X1/8 TUBE CONN. "B"
108	24	41.8	41.8	61.1	61.1	100.0	100.0
	30	33.4	33.4	48.9	48.9	85.5	85.5
	36	27.9	27.9	40.7	40.7	71.2	71.2
	42	–	–	34.9	34.9	61.0	61.0
	48	–	–	30.5	30.5	53.4	53.4
	54	–	–	27.1	27.1	47.5	47.5
	60	–	–	–	–	42.7	42.7
	66	–	–	–	–	38.8	38.8
	72	–	–	–	–	35.6	35.6
120	24	30.5	30.5	44.5	44.5	77.9	77.9
	30	24.4	24.4	35.6	35.6	62.3	62.3
	36	–	–	29.7	29.7	51.9	51.9
	42	–	–	25.4	25.4	44.5	44.5
	48	–	–	–	–	38.9	38.9
	54	–	–	–	–	34.6	34.6
	60	–	–	–	–	31.1	31.1
	66	–	–	–	–	28.3	28.3
	72	–	–	–	–	26.0	26.0
132	24	–	–	33.5	33.5	58.5	58.5
	30	–	–	26.8	26.8	46.8	46.8
	36	–	–	–	–	39.0	39.0
	42	–	–	–	–	33.4	33.4
	48	–	–	–	–	29.3	29.3
	54	–	–	–	–	26.0	26.0
144	24	–	–	25.8	25.8	45.1	45.1
	30	–	–	–	–	36.0	36.0
	36	–	–	–	–	30.0	30.0
	42	–	–	–	–	25.7	25.7

CONN "A" = CONNECTION METHOD "A". SEE SHEET 5 & 6 FOR DETAIL.

CONN "B" = CONNECTION METHOD "B". SEE SHEET 5 & 6 FOR DETAIL.

NOTE: TUBE TO TUBE CONNECTION, AS DETAILED ON SHEET 5 & 6, IS ACCEPTABLE FOR ALL CONN. "A" LOADS.

NOTE: INDIVIDUAL UNIT SIZES & SHUTTER REQUIREMENTS ARE LIMITED BY THEIR OWN INDIVIDUAL "NOTICE OF ACCEPTANCE"

GENERAL NOTES (ALL DRAWING SHEETS):

1. DOORS ARE APPROVED UNDER SEPERATE N.O.A. WITH AN ALUMINUM PLATE MULLION AS AN UN-CLIPPED MULLION. CASEMENT WINDOWS & SASH GLAZED FIXED WINDOWS ARE APPROVED UNDER SEPERATE N.O.A. WITH AN UNREINFORCED JAMB TO JAMB MULLION. SEE THE PRODUCTS SPECIFIC N.O.A. FOR USE OF THESE MULLIONS WHEN THEY APPLY.
2. THESE MULLION SYSTEMS HAVE BEEN TESTED, ANALYZED AND APPROVED FOR DESIGN PRESSURES NOT TO EXCEED THOSE SHOWN ON THESE DRAWINGS.
3. BLOCK AND FRAME OPENINGS MUST BE DESIGNED & CONSTRUCTED TO WITHSTAND WIND LOADS TRANSFERRED BY THE MULLIONS & SUPPORTED WINDOWS/DOORS.
4. ALL HARDWARE & FASTENERS SHALL BE IN ACCORDANCE WITH THESE DRAWINGS & MAY NOT VARY UNLESS SPECIFICALLY MENTIONED ON THE DRAWINGS.
5. THESE MULLION SYSTEMS HAVE BEEN DESIGNED IN ACCORDANCE WITH THE FLORIDA BUILDING CODE (FBC) INCLUDING HIGH VELOCITY HURRICANE ZONES (HVHZ).
6. THIS MULLION PRODUCT HAS BEEN TESTED IN ACCORDANCE WITH FBC PROTOCOLS TAS-201, TAS-202 & TAS-203 FOR LARGE MISSILE IMPACT, STRUCTURAL & CYCLIC TESTING.
7. ALL PRODUCTS TO BE USED WITH THESE MULLIONS MUST BE ALUMINUM CLAD WOOD FRAMED PRODUCTS MANUFACTURED BY HURD WINDOWS & DOORS AND MUST HOLD A IMPACT OR NON-IMPACT DADE COUNTY NOTICE OF ACCEPTANCE (N.O.A.) AND/OR FLORIDA APPROVAL.
8. ALLOWABLE PRESSURE ON THE MULLED UNIT SHALL BE CONTROLLED BY THE LESSER ALLOWABLE PRESSURE OF THE MULLION OR THE INDIVIDUAL DOOR/WINDOW UNITS.
9. FOR WINDOW OR DOOR FRAME TO OPENING ATTACHMENT, SEE THE RESPECTIVE PRODUCT APPROVAL DRAWINGS FOR THE WINDOW/DOOR.
10. MULLION LENGTHS ARE RESTRICTED BY THOSE SHOWN IN THE TABLES.
11. THE LOADS IN THESE GRAPHS CONSIDER WORSE CASE OF MULLION STRESS, DEFLECTION AND END REACTION.
12. ANY CONDITIONS NOT COVERED IN THIS APPROVAL SHALL BE SUBJECT TO SEPERATE ENGINEERING REVIEW.
13. ALL TUBES SHALL BE 6061-T6 OR 6005-T5 ALUMINUM. ALL CONNECTION ANGLES SHALL BE 6063-T5 ALUMINUM
14. ALL EMBEDMENTS SPECIFIED ARE TO BE BEYOND WALL FINISH.
15. MATERIALS, INCLUDING BUT NOT LIMITED TO STEEL SCREWS, THAT COME INTO CONTACT WITH OTHER DISSIMILAR MATERIALS SHALL MEET THE REQUIREMENTS OF FLORIDA BUILDING CODE CHAPTER 20.

PRODUCT REVISED
as complying with the Florida Building Code
Acceptance No 11-1021.16
Expiration Date 02/14/2017
By Shaq I. Chavez
Miami-Dade Product Control

PRODUCT REVISED
as complying with the Florida Building Code
Acceptance No 14-1224.01
Expiration Date Feb. 14, 2017
By Manuel Torres
Miami-Dade Product Control

WARREN W. SCHAEFER LICENSE No. 44135 STATE OF FLORIDA PROFESSIONAL ENGINEER

THESE DRAWINGS ARE APPLICABLE ONLY TO THE PRODUCT SPECIFIED. THEY MAY NOT BE USED FOR THE ASSEMBLY AND/OR INSTALLATION OF ANY OTHER PRODUCT NOR MAY THEY BE USED FOR RATIONAL AND/OR LOCAL APPROVAL OF ANY PRODUCT NOT PRODUCED BY THE MANUFACTURER STATED ON THESE DRAWINGS.

DRAWN BY: W.W.S.	CHECKED BY: W.W.S.
PLOT: 1=24	DATE: 07/24/01

NO.	REVISION DESCRIPTION	BY	DATE
A1	UPDATE TO 2004 CODE	W.W.S.	07/28/05
B1	UPDATE TO CURENT STANDARDS	W.R.M.	10/05/11

DRAWING TITLE: CLIPPED IMPACT & NON-IMPACT ALUMINUM TUBE MULLIONS

MANUFACTURER: HWD ACQUISITION, INC. dba HURD WINDOWS & DOORS, 575 S. WHELEN AVE., MEDFORD, WI 54451, 800-433-4873

CONSULTANTS: W. W. SCHAEFER ENGINEERING & CONSULTING, P.A. (CA 6809), 7480 150TH COURT NORTH, PALM BEACH GARDENS, FL 33418, PHONE: 561-744-3424

CERTIFICATION: OCT 05 2011, WARREN W. SCHAEFER, P.E. P.E. NO. 44135

DRAWING NO. 1047A REV. B

SHEET NO. 1 OF 6

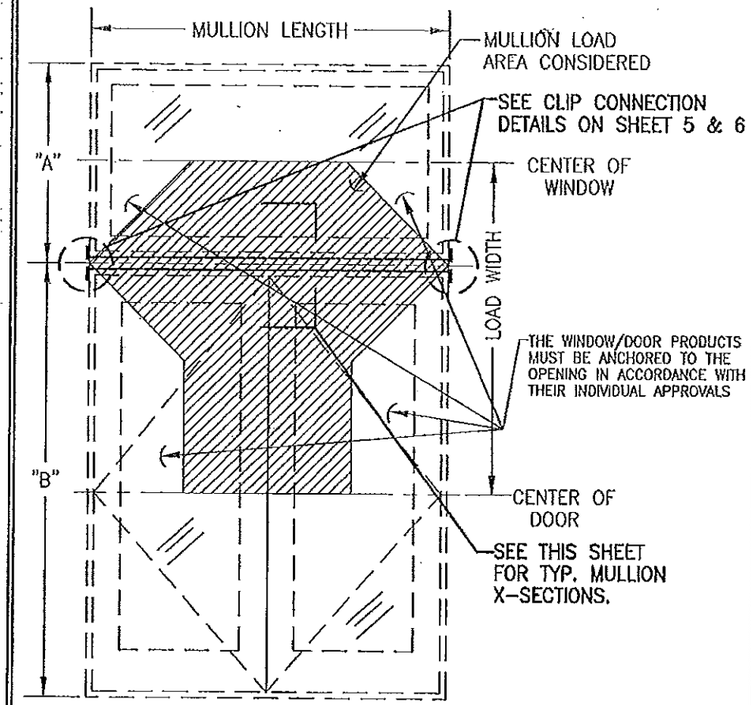

DOUBLE DOOR WITH TRANSOM

LOAD WIDTH = (A + B)/2

NOTE: "TRANSOM" MAY BE A SASH GLAZED FIXED WINDOW, DIRECT GLAZED FIXED WINDOW OR A FIXED DOOR PANEL UNDER SEPERATE APPROVAL.

CONN "A" = CONNECTION METHOD "A". SEE SHEET 5 & 6 FOR DETAIL.

CONN "B" = CONNECTION METHOD "B". SEE SHEET 5 & 6 FOR DETAIL.

NOTE: TUBE TO TUBE CONNECTION, AS DETAILED ON SHEET 5 & 6, IS ACCEPTABLE FOR ALL CONN. "A" LOADS.

DOUBLE DOOR WITH TRANSOM

LENGTH (IN.)	LOAD WIDTH (IN.) A+B / 2	ALLOWABLE PRESSURES (PSF) 4X1X1/8 TUBE CONN. "A"	4X1X1/8 TUBE CONN. "B"	4X2X1/8 TUBE CONN. "A"	4X2X1/8 TUBE CONN. "B"	5X2X1/8 TUBE CONN. "A"	5X2X1/8 TUBE CONN. "B"
48	78	100.0	100.0	100.0	100.0	100.0	100.0
	84	100.0	97.1	100.0	97.1	100.0	97.1
54	72	100.0	100.0	100.0	100.0	100.0	100.0
	78	98.1	93.0	100.0	93.0	100.0	93.0
	84	91.1	86.3	100.0	86.3	100.0	86.3
60	54	100.0	100.0	100.0	100.0	100.0	100.0
	60	97.5	97.5	100.0	100.0	100.0	100.0
	66	88.7	88.7	100.0	98.9	100.0	98.9
	72	81.3	81.3	100.0	90.7	100.0	90.7
	78	75.0	75.0	100.0	83.7	100.0	83.7
	84	69.7	69.7	100.0	77.7	100.0	77.7
66	48	91.6	91.6	100.0	100.0	100.0	100.0
	54	81.4	81.4	100.0	100.0	100.0	100.0
	60	73.3	73.3	100.0	98.9	100.0	98.9
	66	66.6	66.6	97.3	89.9	100.0	89.9
	72	61.1	61.1	89.2	82.4	100.0	82.4
	78	56.4	56.4	82.4	76.1	100.0	76.1
	84	52.3	52.3	76.5	70.6	95.0	70.6
72	48	70.6	70.6	100.0	100.0	100.0	100.0
	54	62.7	62.7	91.6	91.6	100.0	100.0
	60	56.4	56.4	82.5	82.5	100.0	90.7
	66	51.3	51.3	75.0	75.0	100.0	82.4
	72	47.0	47.0	68.7	68.7	100.0	75.6
	78	43.4	43.4	63.4	63.4	93.8	69.7
	84	40.3	40.3	58.9	58.9	87.1	64.8
78	48	55.5	55.5	81.1	81.1	100.0	100.0
	54	49.3	49.3	72.1	72.1	100.0	93.0
	60	44.4	44.4	64.9	64.9	100.0	83.7
	66	40.4	40.4	59.0	59.0	100.0	76.1
	72	37.0	37.0	54.0	54.0	93.8	69.7
	78	34.1	34.1	49.9	49.9	86.6	64.4
	84	31.7	31.7	46.3	46.3	80.4	59.8
84	48	44.4	44.4	64.9	64.9	100.0	97.1
	54	39.5	39.5	57.7	57.7	100.0	86.3
	60	35.5	35.5	51.9	51.9	90.8	77.7
	66	32.3	32.3	47.2	47.2	82.6	70.6
	72	29.6	29.6	43.3	43.3	75.7	64.8
	78	27.3	27.3	39.9	39.9	69.9	59.8
	84	25.4	25.4	37.1	37.1	64.9	55.5

ALL ALUMINUM TUBES SHALL BE 6061-T6 OR 6005-T5 ALUMINUM

NOTE: INDIVIDUAL UNIT SIZES & SHUTTER REQUIREMENTS ARE LIMITED BY THEIR OWN INDIVIDUAL "NOTICE OF ACCEPTANCE"

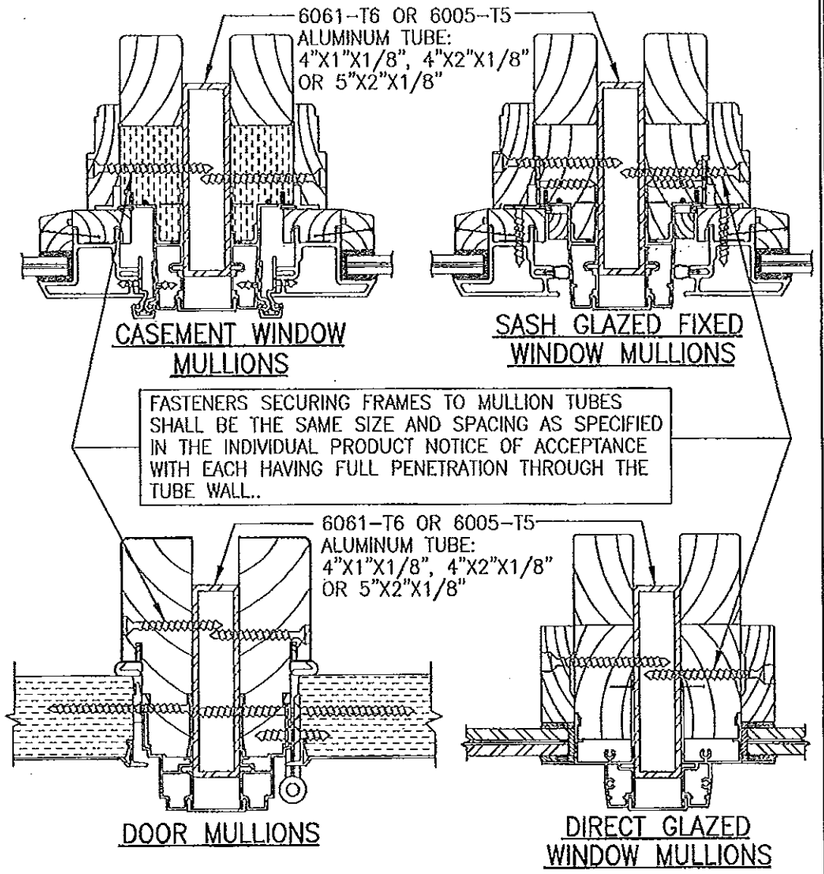

TYPICAL MULLION CONDITIONS

NOTE: PRODUCTS CAN BE INTERMIXED & ARE NOT LIMITED TO THOSE SHOWN. PRODUCTS USED WITH THE MULLIONS MUST BE ALUMINUM CLAD WOOD WINDOW/DOOR PRODUCTS MANUFACTURED BY HURD WINDOWS & DOORS & MUST HOLD A MIAMI-DADE COUNTY "NOTICE OF ACCEPTANCE" OR FLORIDA APPROVAL

PRODUCT REVISED
as complying with the Florida Building Code
Acceptance No 11-1021.16
Expiration Date 02/14/17
By Greg I. Chanda
Miami Dade Product Control

PRODUCT REVISED
as complying with the Florida Building Code
Acceptance No 14-1224.01
Expiration Date Feb 14, 2017
By Manuel Seiz
Miami Dade Product Control

WARREN W. SCHAEFER LICENSE No. 44135 STATE OF FLORIDA PROFESSIONAL ENGINEER

DRAWN BY: W.W.S.	CHECKED BY: W.W.S.
PLOT: 1=24	DATE: 07/24/01

NO.	REVISION DESCRIPTION	BY	DATE

DRAWING TITLE: CLIPPED IMPACT & NON-IMPACT ALUMINUM TUBE MULLIONS

MANUFACTURER: HWD ACQUISITION, INC. dba HURD WINDOWS & DOORS, 575 S. WHELEN AVE., MEDFORD, WI 54451, 800-433-4873

CONSULTANTS: W. W. SCHAEFER ENGINEERING & CONSULTING, P.A. (CA 6809), 7480 150TH COURT NORTH, PALM BEACH GARDENS, FL 33418, PHONE 561-744-3424

CERTIFICATION: OCT 05 2016 — WARREN W. SCHAEFER, P.E. RE. NO. 44135

DRAWING NO. 1047A REV. B

SHEET NO. 2 OF 6

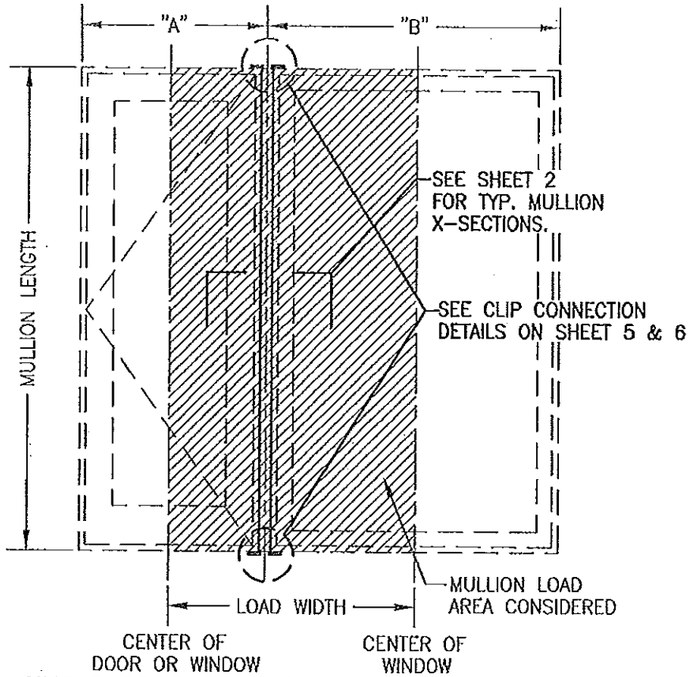

SINGLE DOOR OR CASEMENT WITH SIDELIGHT, DOOR TO DOOR OR CASEMENT TO CASEMENT

LOAD WIDTH = (A + B)/2

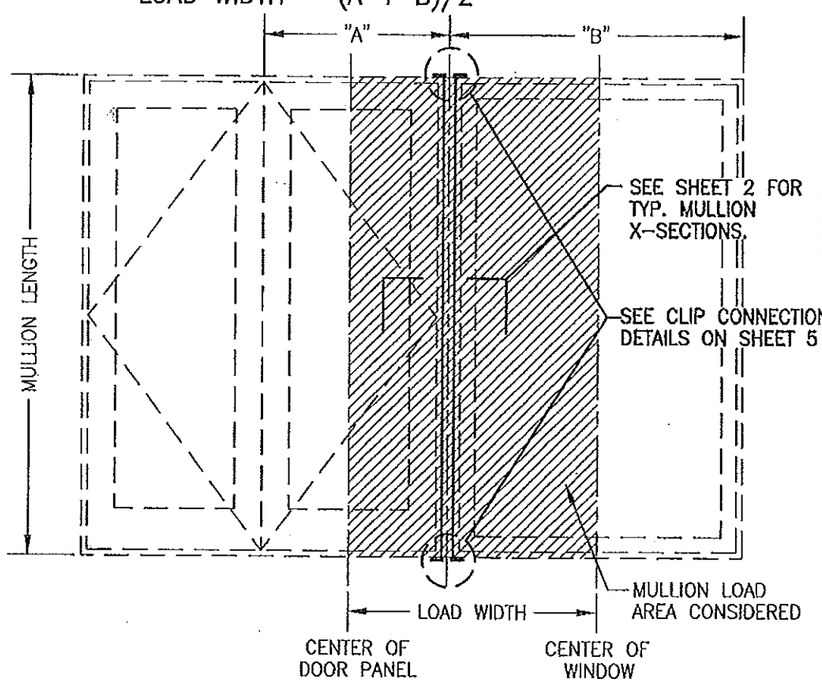

DOUBLE DOOR W/SIDELIGHT OR DOUBLE DOOR TO DOOR

LOAD WIDTH = (A + B)/2

NOTE: IF DOOR IS MULLED TO DOOR, DIMENSION "B" WILL BE HALF THE WIDTH OF THE DOOR PANEL AS WITH DIMENSION "A".

DOOR OR CASEMENT WITH SIDELIGHT							
LENGTH (IN.)	LOAD WIDTH (IN.)	ALLOWABLE PRESSURES (PSF)					
		4X1X1/8 TUBE		4X2X1/8 TUBE		5X2X1/8 TUBE	
	A+B / 2	CONN. "A"	CONN. "B"	CONN. "A"	CONN. "B"	CONN. "A"	CONN. "B"
48	48	100.0	100.0	100.0	100.0	100.0	100.0
	54	100.0	100.0	100.0	100.0	100.0	100.0
	60	100.0	95.2	100.0	95.2	100.0	95.2
54	42	100.0	100.0	100.0	100.0	100.0	100.0
	48	100.0	100.0	100.0	100.0	100.0	100.0
	54	100.0	94.0	100.0	94.0	100.0	94.0
	60	100.0	84.6	100.0	84.6	100.0	84.6
60	36	100.0	100.0	100.0	100.0	100.0	100.0
	42	100.0	100.0	100.0	100.0	100.0	100.0
	48	100.0	95.2	100.0	95.2	100.0	95.2
	54	100.0	84.6	100.0	84.6	100.0	84.6
	60	97.5	76.2	100.0	76.2	100.0	76.2
66	36	100.0	100.0	100.0	100.0	100.0	100.0
	42	100.0	98.9	100.0	98.9	100.0	98.9
	48	91.6	86.5	100.0	86.5	100.0	86.5
	54	81.4	76.9	100.0	76.9	100.0	76.9
	60	73.3	69.2	93.1	69.2	93.1	69.2
72	30	100.0	100.0	100.0	100.0	100.0	100.0
	36	94.1	94.1	100.0	100.0	100.0	100.0
	42	80.6	80.6	100.0	90.7	100.0	90.7
	48	70.6	70.6	100.0	79.3	100.0	79.3
	54	62.7	62.7	91.6	70.5	94.8	70.5
	60	56.4	56.4	82.5	63.5	85.3	63.5

NOTE: "SIDELIGHT" MAY BE A SASH GLAZED FIXED WINDOW, A DIRECT GLAZED FIXED WINDOW, OR A FIXED DOOR PANEL UNDER SEPERATE APPROVAL.

DOOR OR CASEMENT WITH SIDELIGHT							
LENGTH (IN.)	LOAD WIDTH (IN.)	ALLOWABLE PRESSURES (PSF)					
		4X1X1/8 TUBE		4X2X1/8 TUBE		5X2X1/8 TUBE	
	A+B / 2	CONN. "A"	CONN. "B"	CONN. "A"	CONN. "B"	CONN. "A"	CONN. "B"
78	24	100.0	100.0	100.0	100.0	100.0	100.0
	30	88.8	88.8	100.0	100.0	100.0	100.0
	36	74.0	74.0	100.0	97.6	100.0	97.6
	42	63.4	63.4	92.7	83.7	100.0	83.7
	48	55.5	55.5	81.1	73.2	98.5	73.2
	54	49.3	49.3	72.1	65.1	87.5	65.1
	60	44.4	44.4	64.9	58.6	78.8	58.6
80	24	100.0	100.0	100.0	100.0	100.0	100.0
	30	82.3	82.3	100.0	100.0	100.0	100.0
	36	68.6	68.6	100.0	95.2	100.0	95.2
	42	58.8	58.8	85.9	81.6	100.0	81.6
	48	51.4	51.4	75.1	71.4	96.0	71.4
	54	45.7	45.7	66.8	63.5	85.3	63.5
	60	41.1	41.1	60.1	57.1	76.8	57.1
84	24	88.9	88.9	100.0	100.0	100.0	100.0
	30	71.1	71.1	100.0	100.0	100.0	100.0
	36	59.2	59.2	86.5	86.5	100.0	90.7
	42	50.8	50.8	74.2	74.2	100.0	77.7
	48	44.4	44.4	64.9	64.9	91.4	68.0
	54	39.5	39.5	57.7	57.7	81.3	60.4
	60	35.5	35.5	51.9	51.9	73.1	54.4
92	24	67.6	67.6	98.8	98.8	100.0	100.0
	30	54.1	54.1	79.1	79.1	100.0	99.3
	36	45.1	45.1	65.9	65.9	100.0	82.8
	42	38.7	38.7	56.5	56.5	95.4	71.0
	48	33.8	33.8	49.4	49.4	83.5	62.1
	54	30.1	30.1	43.9	43.9	74.2	55.2
	60	27.1	27.1	39.5	39.5	66.8	49.7
96	24	59.5	59.5	87.0	87.0	100.0	100.0
	30	47.6	47.6	69.6	69.6	100.0	95.2
	36	39.7	39.7	58.0	58.0	100.0	79.3
	42	34.0	34.0	49.7	49.7	86.9	68.0
	48	29.8	29.8	43.5	43.5	76.0	59.5
	54	26.5	26.5	38.7	38.7	67.6	52.9
	60	23.8	23.8	34.8	34.8	60.8	47.6

ALL ALUMINUM TUBES SHALL BE 6061-T6 OR 6005-T5 ALUMINUM

NOTE: INDIVIDUAL UNIT SIZES & SHUTTER REQUIREMENTS ARE LIMITED BY THEIR OWN INDIVIDUAL "NOTICE OF ACCEPTANCE."

CONN "A" = CONNECTION METHOD "A". SEE SHEET 5 & 6 FOR DETAIL.

CONN "B" = CONNECTION METHOD "B". SEE SHEET 5 & 6 FOR DETAIL.

NOTE: TUBE TO TUBE CONNECTION, AS DETAILED ON SHEET 5 & 6, IS ACCEPTABLE FOR ALL CONN. "A" LOADS.

PRODUCT REVISED
as complying with the Florida Building Code
Acceptance No 14-1224.01
Expiration Date Feb 14, 2017
By Manuel Perez
Miami Dade Product Control

PRODUCT REVISED
as complying with the Florida Building Code
Acceptance No 11-1021.16
Expiration Date 02/14/17
By Chang Li Chang
Miami Dade Product Control

WARREN W. SCHAEFER LICENSE No. 44135 STATE OF FLORIDA PROFESSIONAL ENGINEER

DRAWN BY: W.W.S.	CHECKED BY: W.W.S.
PLOT: 1=24	DATE: 07/24/01

NO.	REVISION DESCRIPTION	BY	DATE

DRAWING TITLE: CLIPPED IMPACT & NON-IMPACT ALUMINUM TUBE MULLIONS

MANUFACTURER: HWD ACQUISITION, INC. dba HURD WINDOWS & DOORS, 575 S. WHELEN AVE., MEDFORD, WI 54451, 800-433-4873

CONSULTANTS: W. W. SCHAEFER ENGINEERING & CONSULTING, P.A. (CA 6809), 7480 150TH COURT NORTH, PALM BEACH GARDENS, FL 33418, PHONE: 561-744-5424

CERTIFICATION: OCT 02 2001, WARREN W. SCHAEFER, P.E. P.E. NO. 44135

DRAWING NO. 1047A | REV. B

SHEET NO. 3 OF 6

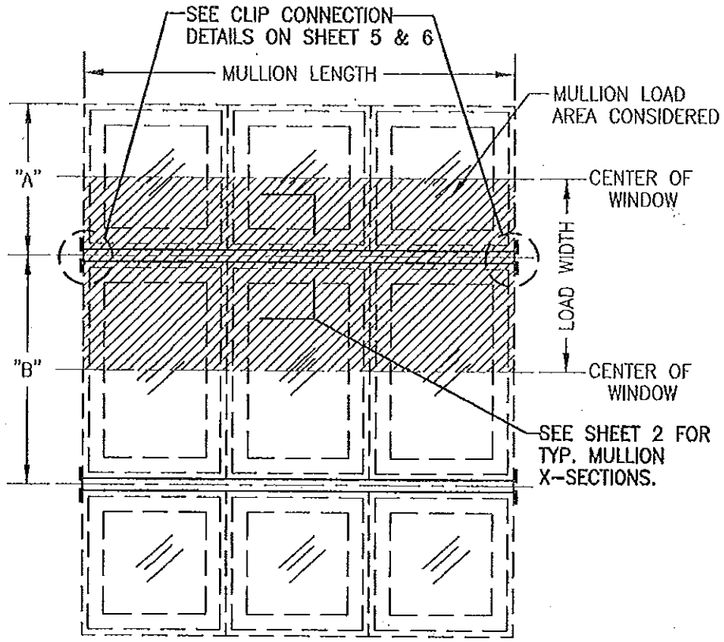

MULTIPLE WINDOWS (HORIZONTAL MULLION)

LOAD WIDTH = (A + B)/2

MULLIONS MAY BE HORIZONTAL OR VERTICAL

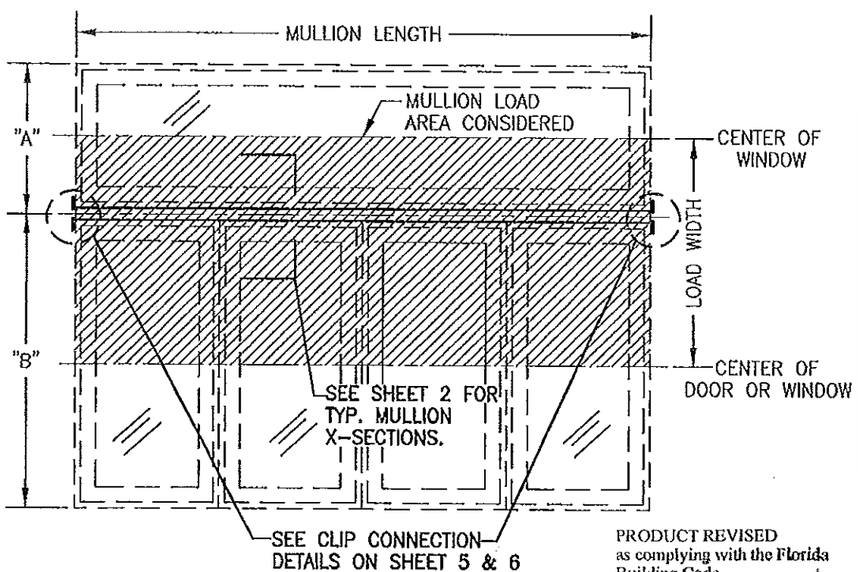

MULTIPLE WINDOWS/DOORS WITH TRANSOM

LOAD WIDTH = (A + B)/2

TRANSOM MAY BE SINGLE OR MULTIPLE WINDOWS

PRODUCT REVISED
as complying with the Florida Building Code
Acceptance No 14-1224.01
Expiration Date Feb. 14, 2017
By Manuel Perez
Miami-Dade Product Control

MULTIPLE WINDOWS/DOORS

LENGTH (IN.)	LOAD WIDTH (IN.) A+B / 2	ALLOWABLE PRESSURES (PSF) 4X1X1/8 TUBE CONN. "A"	4X1X1/8 TUBE CONN. "B"	4X2X1/8 TUBE CONN. "A"	4X2X1/8 TUBE CONN. "B"	5X2X1/8 TUBE CONN. "A"	5X2X1/8 TUBE CONN. "B"
36	66	100.0	100.0	100.0	100.0	100.0	100.0
	72	100.0	100.0	100.0	100.0	100.0	100.0
	78	100.0	97.6	100.0	97.6	100.0	97.6
42	54	100.0	100.0	100.0	100.0	100.0	100.0
	60	100.0	100.0	100.0	100.0	100.0	100.0
	66	100.0	98.9	100.0	98.9	100.0	98.9
	72	100.0	90.7	100.0	90.7	100.0	90.7
	78	100.0	83.7	100.0	83.7	100.0	83.7
48	48	100.0	100.0	100.0	100.0	100.0	100.0
	54	100.0	100.0	100.0	100.0	100.0	100.0
	60	100.0	95.2	100.0	95.2	100.0	95.2
	66	100.0	86.5	100.0	86.5	100.0	86.5
	72	100.0	79.3	100.0	79.3	100.0	79.3
	78	98.5	73.2	98.5	73.2	98.5	73.2
54	42	100.0	100.0	100.0	100.0	100.0	100.0
	48	100.0	100.0	100.0	100.0	100.0	100.0
	54	100.0	94.0	100.0	94.0	100.0	94.0
	60	100.0	84.6	100.0	84.6	100.0	84.6
	66	100.0	76.9	100.0	76.9	100.0	76.9
	72	94.8	70.5	94.8	70.5	94.8	70.5
	78	87.5	65.1	87.5	65.1	87.5	65.1
60	36	100.0	100.0	100.0	100.0	100.0	100.0
	42	100.0	100.0	100.0	100.0	100.0	100.0
	48	100.0	95.2	100.0	95.2	100.0	95.2
	54	100.0	84.6	100.0	84.6	100.0	84.6
	60	97.5	76.2	100.0	76.2	100.0	76.2
	66	88.7	69.2	93.1	69.2	93.1	69.2
	72	81.3	63.5	85.3	63.5	85.3	63.5
	78	75.0	58.6	78.8	58.6	78.8	58.6
72	30	100.0	100.0	100.0	100.0	100.0	100.0
	36	94.1	94.1	100.0	100.0	100.0	100.0
	42	80.6	80.6	100.0	90.7	100.0	90.7
	48	70.6	70.6	100.0	79.3	100.0	79.3
	54	62.7	62.7	91.6	70.5	94.8	70.5
	60	56.4	56.4	82.5	63.5	85.3	63.5
	66	51.3	51.3	75.0	57.7	77.6	57.7
	72	47.0	47.0	68.7	52.9	71.1	52.9
	78	43.4	43.4	63.4	48.8	65.6	48.8
84	24	88.9	88.9	100.0	100.0	100.0	100.0
	30	66.6	66.6	97.4	97.4	100.0	100.0
	36	59.2	59.2	86.5	86.5	100.0	90.7
	42	50.8	50.8	74.2	74.2	100.0	77.7
	48	44.4	44.4	64.9	64.9	91.4	68.0
	54	39.5	39.5	57.7	57.7	81.3	60.4
	60	35.5	35.5	51.9	51.9	73.1	54.4
	66	32.3	32.3	47.2	47.2	66.5	49.5
	72	29.6	29.6	43.3	43.3	61.0	45.3
	78	27.3	27.3	39.9	39.9	56.3	41.8

ALL ALUMINUM TUBES SHALL BE 6061-T6 OR 6005-T5 ALUMINUM

NOTE: INDIVIDUAL UNIT SIZES & SHUTTER REQUIREMENTS ARE LIMITED BY THEIR OWN INDIVIDUAL "NOTICE OF ACCEPTANCE"

MULTIPLE WINDOWS/DOORS

LENGTH (IN.)	LOAD WIDTH (IN.) A+B / 2	ALLOWABLE PRESSURES (PSF) 4X1X1/8 TUBE CONN. "A"	4X1X1/8 TUBE CONN. "B"	4X2X1/8 TUBE CONN. "A"	4X2X1/8 TUBE CONN. "B"	5X2X1/8 TUBE CONN. "A"	5X2X1/8 TUBE CONN. "B"
96	24	59.5	59.5	87.0	87.0	100.0	100.0
	30	47.6	47.6	69.6	69.6	100.0	95.2
	36	39.7	39.7	58.0	58.0	100.0	79.3
	42	34.0	34.0	49.7	49.7	86.9	68.0
	48	29.8	29.8	43.5	43.5	76.0	59.5
	54	26.5	26.5	38.7	38.7	67.6	52.9
	60	–	–	34.8	34.8	60.8	47.6
	66	–	–	31.6	31.6	55.3	43.3
	72	–	–	29.0	29.0	50.7	39.7
	78	–	–	26.8	26.8	46.8	36.6
108	24	41.8	41.8	61.1	61.1	100.0	100.0
	30	33.4	33.4	48.9	48.9	85.5	84.6
	36	27.9	27.9	40.7	40.7	71.2	70.5
	42	23.9	23.9	34.9	34.9	61.0	60.4
	48	–	–	30.5	30.5	53.4	52.9
	54	–	–	27.1	27.1	47.5	47.0
	60	–	–	24.4	24.4	42.7	42.3
	66	–	–	–	–	38.8	38.5
	72	–	–	–	–	35.6	35.3
	78	–	–	–	–	32.9	32.5
120	24	30.5	30.5	44.5	44.5	77.9	77.9
	30	24.4	24.4	35.6	35.6	62.3	62.3
	36	–	–	29.7	29.7	51.9	51.9
	42	–	–	25.4	25.4	44.5	44.5
	48	–	–	–	–	38.9	38.9
	54	–	–	–	–	34.6	34.6
	60	–	–	–	–	31.1	31.1
	66	–	–	–	–	28.3	28.3
	72	–	–	–	–	26.0	26.0
132	24	–	–	33.5	33.5	58.5	58.5
	30	–	–	26.8	26.8	46.8	46.8
	36	–	–	–	–	39.0	39.0
	42	–	–	–	–	33.4	33.4
	48	–	–	–	–	29.3	29.3
	54	–	–	–	–	26.0	26.0
144	24	–	–	25.8	25.8	45.1	45.1
	30	–	–	–	–	36.0	36.0
	36	–	–	–	–	30.0	30.0
	42	–	–	–	–	25.7	25.7

CONN "A" = CONNECTION METHOD "A". SEE SHEET 5 & 6 FOR DETAIL.

CONN "B" = CONNECTION METHOD "B". SEE SHEET 5 & 6 FOR DETAIL.

NOTE: TUBE TO TUBE CONNECTION, AS DETAILED ON SHEET 5 & 6, IS ACCEPTABLE FOR ALL CONN. "A" LOADS.

PRODUCT REVISED
as complying with the Florida Building Code
Acceptance No 14-1224.16
Expiration Date 02/14/17
By Chag Chang
Miami-Dade Product Control

WARREN W. SCHAEFER LICENSE No. 44135 STATE OF FLORIDA PROFESSIONAL ENGINEER

DRAWN BY: W.W.S.	CHECKED BY: W.W.S.
PLOT: 1=24	DATE: 07/24/01

NO.	REVISION DESCRIPTION	BY	DATE

DRAWING TITLE: CLIPPED IMPACT & NON-IMPACT ALUMINUM TUBE MULLIONS

MANUFACTURER: HWD ACQUISITION, INC. dba HURD WINDOWS & DOORS, 575 S. WHELEN AVE., MEDFORD, WI 54451, 800-433-4873

CONSULTANTS: W. W. SCHAEFER ENGINEERING & CONSULTING, P.A. (CA 6809), 7480 150TH COURT NORTH, PALM BEACH GARDENS, FL 33418, PHONE: 561-744-3424

CERTIFICATION: OCT 05 2011, WARREN W. SCHAEFER, P.E., P.E. NO. 44135

DRAWING NO. 1047A | REV. B

SHEET NO. 4 OF 6

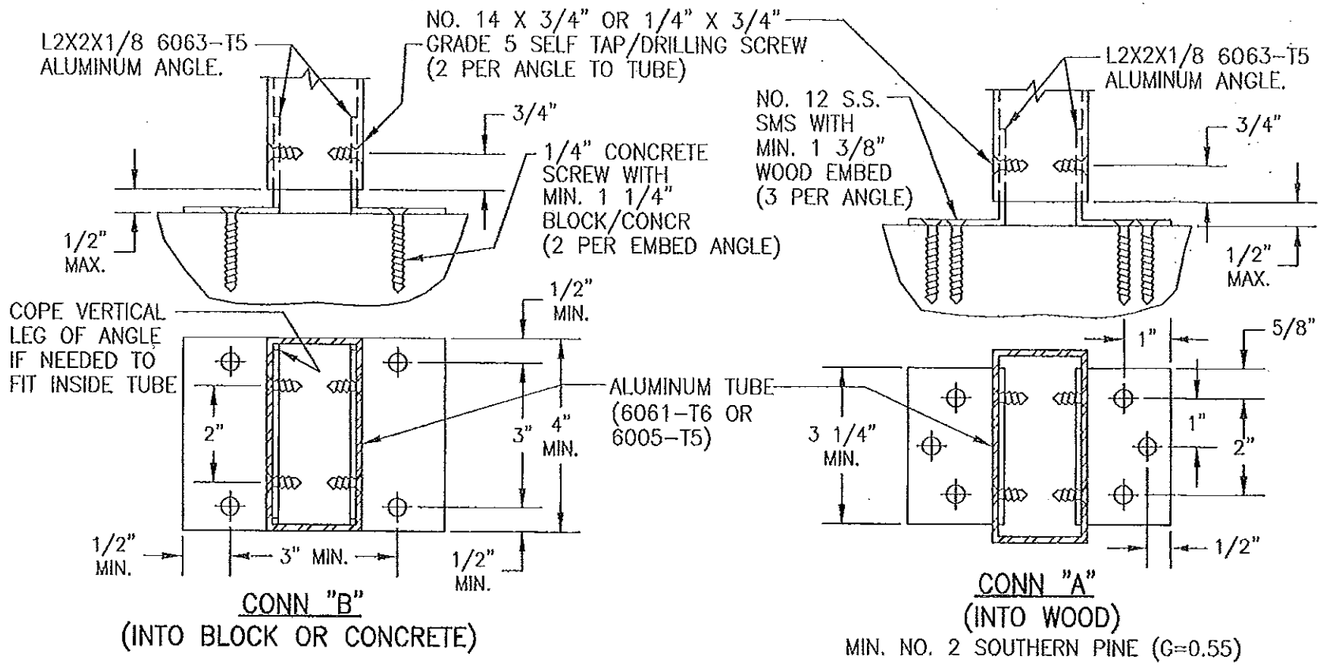

FASTENER EDGE DISTANCE REQUIRED (TO WOOD/CONCR./BLOCK)	
(1) 1/4" CONCRETE SCREWS	2 1/4"
NO. 12 SMS OR WOOD SCREWS	3/4"
(1) CONCRETE SCREWS SHALL BE ELCO ULTRACONS, ELCO CRETE-FLEX, OR HILTI KWIK-CON II (HARDENED STEEL OR S.S.).	

PRODUCT REVISED as complying with the Florida Building Code Acceptance No 14-1224.01 Expiration Date Feb. 14, 2017 By Manuel Perez Miami Dade Product Control

NOTE: CLIPS MAY BE PLACED INSIDE OR OUTSIDE OF THE TUBE.

PRODUCT REVISED as complying with the Florida Building Code Acceptance No 11-1021.16 Expiration Date 02/14/17 By Ishay I. Chaoda Miami Dade Product Control

WARREN W. SCHAEFER LICENSE No. 44135 STATE OF FLORIDA PROFESSIONAL ENGINEER

MULLION END CONNECTION DETAILS USING CLIP ANGLES

DRAWN BY: W.W.S.	CHECKED BY: W.W.S.
PLOT: 1=3	DATE: 07/24/01

NO.	REVISION DESCRIPTION	BY	DATE

DRAWING TITLE: CLIPPED IMPACT & NON-IMPACT ALUMINUM TUBE MULLIONS

MANUFACTURER: HWD ACQUISITION, INC. dba HURD WINDOWS & DOORS, 575 S. WHELEN AVE., MEDFORD, WI 54451, 800-433-4873

CONSULTANTS: W. W. SCHAEFER ENGINEERING & CONSULTING, P.A. (CA 6809), 7480 150TH COURT NORTH, PALM BEACH GARDENS, FL 33418, PHONE: 561-744-3424

CERTIFICATION: OCT 05 2011 WARREN W. SCHAEFER, P.E. P.E. NO. 44135

DRAWING NO. 1047A REV. B

SHEET NO. 5 OF 6

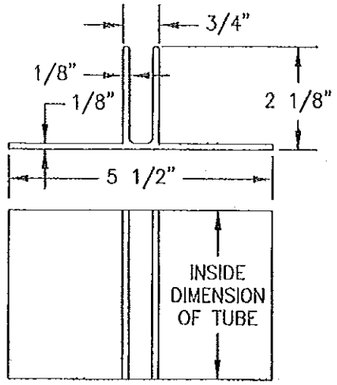

EXTRUDED CLIP
6063-T5 ALUMINUM

INSTALLATION INSTRUCTION:

1. SLIP CLIP INTO TUBE (CLIP MUST BE CUT TO THE INSIDE DIMENSION OF THE TUBE & BE CENTERED WITH THE TUBE). NOTE THAT NO SCREWING OF TUBE TO CLIP IS REQUIRED.
2. SECURE CLIP TO STRUCTURE USING FASTENING METHOD DESCRIBED WITH EACH CONNECTION TYPE "A" & "B" AND THE APLICABLE OPTION CONSIDERING ALL DIMENSION REQUIREMENTS SPECIFIED AS MIN & MAX.

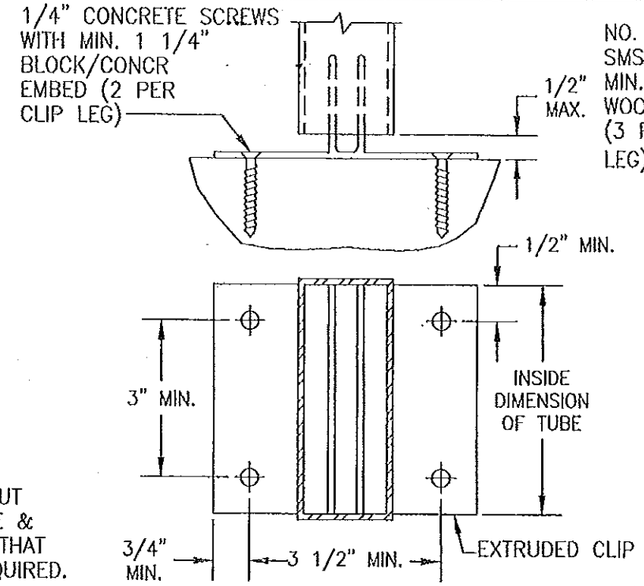

CONN "B"
(INTO BLOCK OR CONCRETE)
IF REQUIRED TO FIT INSIDE A 4" TUBE, THE VERTICAL LEGS MAY BE TRIMMED TO FIT INSIDE THE TUBE.

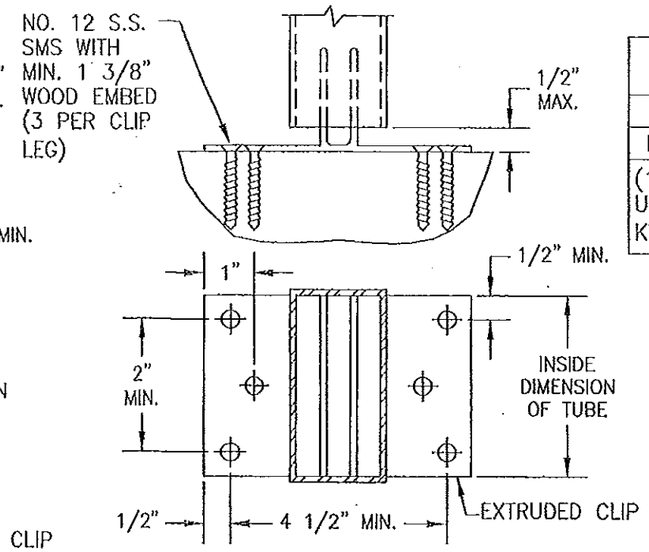

CONN "A"
(INTO WOOD)
MIN. NO. 2 SOUTHERN PINE (G=0.55)

FASTENER EDGE DISTANCE REQUIRED (TO WOOD/CONCR./BLOCK)	
(1) 1/4" CONCRETE SCREWS	2 1/4"
NO. 12 SMS OR WOOD SCREWS	3/4"
(1) CONCRETE SCREWS SHALL BE ELCO ULTRACONS, ELCO CRETE-FLEX, OR HILTI KWIK-CON II (HARDENED STEEL OR S.S.).	

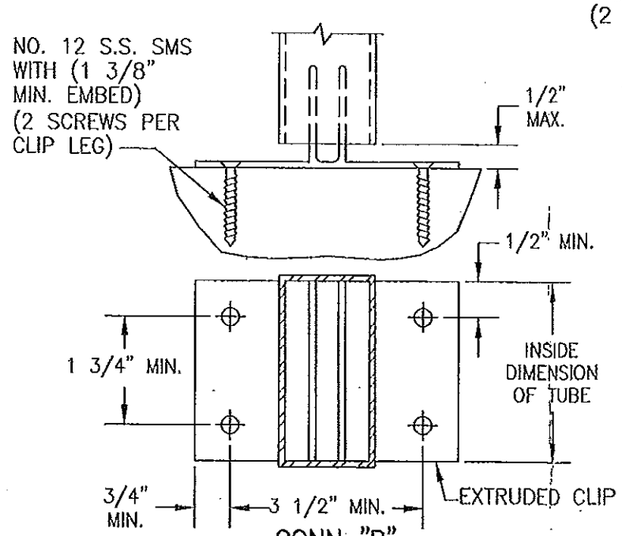

CONN "B"
(INTO WOOD)
WOOD = MIN. NO. 2 SOUTHERN PINE (G=0.55)

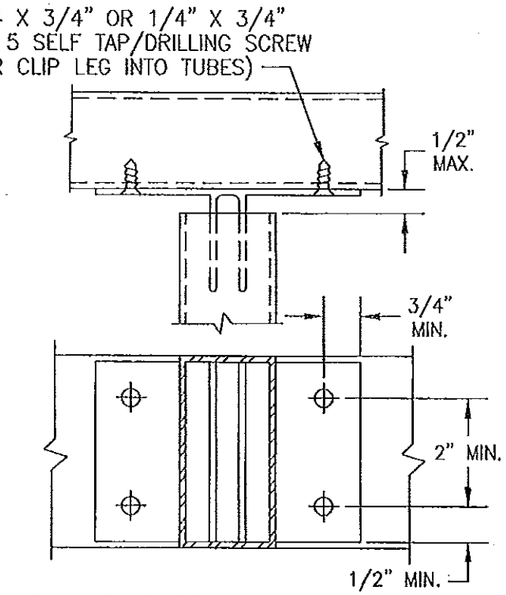

TYP. TUBE TO TUBE CONNECTION

MULLION END CONNECTION DETAILS USING EXTRUDED CLIP

PRODUCT REVISED
as complying with the Florida
Building Code
Acceptance No. 11-1021.16
Expiration Date 02/14/2017
By Ishaq I. Chanda
Miami Dade Product Control

PRODUCT REVISED
as complying with the Florida
Building Code
Acceptance No. 14-1224.01
Expiration Date Feb. 14, 2017
By Manuel Perez
Miami Dade Product Control

WARREN W. SCHAEFER ★ LICENSE No. 44135 ★ STATE OF FLORIDA ★ PROFESSIONAL ENGINEER

DRAWN BY: W.W.S.	CHECKED BY: W.W.S.
PLOT: 1=3	DATE: 07/24/01

NO.	REVISION DESCRIPTION	BY	DATE

DRAWING TITLE: CLIPPED IMPACT & NON-IMPACT ALUMINUM TUBE MULLIONS

MANUFACTURER: HWD ACQUISITION, INC. dba HURD WINDOWS & DOORS
575 S. WHELEN AVE.
MEDFORD, WI 54451
800-433-4873

CONSULTANTS: W. W. SCHAEFER ENGINEERING & CONSULTING, P.A. (CA 6809)
7480 150TH COURT NORTH
PALM BEACH GARDENS, FL 33418
PHONE: 561-744-3424

CERTIFICATION
OCT 05 2011
WARREN W. SCHAEFER, P.E.
P.E. NO. 44135

DRAWING NO. 1047A | REV. B
SHEET NO. 6 OF 6