MIAMI-DADE COUNTY
DEPARTMENT OF REGULATORY AND ECONOMIC RESOURCES (RER)
BOARD AND CODE ADMINISTRATION DIVISION

MIAMI-DADE COUNTY, FLORIDA
PRODUCT CONTROL SECTION
11805 SW 26 Street, Room 208
T (786) 315-2590 F (786) 315-2599
www.miamidade.gov/economy

NOTICE OF ACCEPTANCE (NOA)

New Age Windows & Doors Corp.
7196 NW 77 Terrace
Medley, FL 33166

SCOPE:

This NOA is being issued under the applicable rules and regulations governing the use of construction materials. The documentation submitted has been reviewed and accepted by Miami-Dade County RER-Product Control Section to be used in Miami-Dade County and other areas where allowed by the Authority Having Jurisdiction (AHJ).

This NOA shall not be valid after the expiration date stated below. The Miami-Dade County Product Control Section (In Miami-Dade County) and/ or the AHJ (in areas other than Miami-Dade County) reserve the right to have this product or material tested for quality assurance purposes. If this product or material fails to perform in the accepted manner, the manufacturer will incur the expense of such testing and the AHJ may immediately revoke, modify, or suspend the use of such product or material within their jurisdiction. RER reserves the right to revoke this acceptance, if it is determined by Miami-Dade County Product Control Section that this product or material fails to meet the requirements of the applicable building code.

This product is approved as described herein, and has been designed to comply with the Florida Building Code, including the High Velocity Hurricane Zone.

DESCRIPTION: Series Aluminum Horizontal Sliding Window – L.M.I.

APPROVAL DOCUMENT: Drawing No. **AD11-12**, titled "Aluminum Horizontal Sliding Windows – LMI", sheets 01 through 07 of 07, dated 05/24/11, prepared by MCY Engineering, Inc. – Glazing Consultants, with the latest revision "**1**", dated 12/17/14, signed and sealed by Yiping Wang, P. E., bearing the Miami-Dade County Product Control Section Revision stamp with the Notice of Acceptance number and expiration date by the Miami-Dade County Product Control Section.

MISSILE IMPACT RATING: Large and Small Missile Impact Resistant

LABELING: Each unit shall bear a permanent label with the manufacturer's name or logo, city, state, series, and following statement: "Miami-Dade County Product Control Approved", unless otherwise noted herein.

RENEWAL of this NOA shall be considered after a renewal application has been filed and there has been no change in the applicable building code negatively affecting the performance of this product.

TERMINATION of this NOA will occur after the expiration date or if there has been a revision or change in the materials, use, and/ or manufacture of the product or process. Misuse of this NOA as an endorsement of any product, for sales, advertising or any other purposes shall automatically terminate this NOA. Failure to comply with any section of this NOA shall be cause for termination and removal of NOA.

ADVERTISEMENT: The NOA number preceded by the words Miami-Dade County, Florida, and followed by the expiration date may be displayed in advertising literature. If any portion of the NOA is displayed, then it shall be done in its entirety.

INSPECTION: A copy of this entire NOA shall be provided to the user by the manufacturer or its distributors and shall be available for inspection at the job site at the request of the Building Official.

This NOA **revises NOA No. 11-0616.06** and consists of this page 1 and evidence pages E-1 and E-2, as well as approval document mentioned above.

The submitted documentation was reviewed by **Jaime D. Gascon, P. E.**

MIAMI-DADE COUNTY APPROVED

J. Gascon
3/26/15

New Age Windows & Doors Corp.

NOTICE OF ACCEPTANCE: EVIDENCE SUBMITTED

A. DRAWINGS

1. Manufacturer's die drawings and sections.
   (Submitted under previous NOA No. 06–0406.13)
2. Drawing No. **AD11–12**, titled "Aluminum Horizontal Sliding Windows – LMI", sheets 01 through 07 of 07, dated 05/24/11, prepared by MCY Engineering, Inc. – Glazing Consultants, with the latest revision "**1**", dated 12/17/14, signed and sealed by Yiping Wang, P. E.

B. TESTS

1. Test reports on: 1) Air Infiltration Test, per FBC, TAS 202–94
   2) Uniform Static Air Pressure Test, Loading per FBC, TAS 202–94
   3) Water Resistance Test, per FBC, TAS 202–94
   4) Forced Entry Test, per FBC 2411:3.2.1, and TAS 202–94

   along with marked–up drawings and installation diagram of an aluminum horizontal sliding window, prepared by Hurricane Engineering & Testing Inc., Test Report No. **HETI–05–1436**, dated 02/18/05, signed and sealed by Ivonne Ghia, P. E.
   (Submitted under previous NOA No. 06–0406.13)
2. Test reports on: 1) Large Missile Impact Test per FBC, TAS 201–94
   2) Cyclic Wind Pressure Loading per FBC, TAS 203–94

   along with marked–up drawings and installation diagram of an aluminum horizontal sliding window, both prepared by Hurricane Engineering & Testing Inc., Test Reports No.'s **HETI–05–1965**, dated 11/25/05 and **HETI–05–2044**, dated 11/11/05, signed and sealed by Ivonne Ghia, P. E. ***(Submitted under previous NOA No. 06–0406.13)***

C. CALCULATIONS

1. Anchor verification calculations and structural analysis, complying with **FBC 5th Edition (2014)**, prepared by MCY Engineering, Inc., dated 12/17/14, signed and sealed by Yiping Wang, P. E.
2. **Glazing complies with ASTM E1300–04/ 09**

D. QUALITY ASSURANCE

1. Miami–Dade Department of Regulatory and Economic Resources (RER).

E. MATERIAL CERTIFICATIONS

1. Notice of Acceptance No. **14–0916.10** issued to **Kuraray America, Inc.** for their **"Kuraray PVB Glass Interlayer"** expiring on 12/11/16.
2. Notice of Acceptance No. **14–0423.16** issued to **Eastman Chemical Company (MA)** for their "**Saflex HP Clear or Color Glass Interlayers**" dated 06/19/14, expiring on 04/14/18.

Jaime D. Gascon, P. E.
Product Control Section Supervisor
NOA No. 14–1224.07
Expiration Date: November 23, 2016
Approval Date: April 02, 2015

NOTICE OF ACCEPTANCE: EVIDENCE SUBMITTED

F. STATEMENTS

1. Statement letter of conformance to and of complying with **FBC 5th Edition (2014)**, issued by MCY Engineering, Inc., dated 12/17/14, signed and sealed by Yiping Wang, P. E.
2. Department of State Certification of **NEW AGE WINDOWS & DOORS CORP.** as a for profit corporation, active and organized under the laws of the State of Florida, dated January 12, 2015 and filed by the Secretary of State.
3. Notification of Successor Engineer for manufacturer's NOA document per **Section 61G15-27.001** of the **Florida Administrative Code**, notifying original engineer that the successor engineer is assuming full professional and legal responsibility for all engineering documents pertaining to this NOA, dated 05/24/11, signed and sealed by Yiping Wang, P. E.
   (Submitted under previous NOA No. 11–0616.06)
4. Statement letter of conformance to and of complying with **FBC–2010**, issued by MCY Engineering, Inc., dated 10/25/11, signed and sealed by Yiping Wang, P. E.
   (Submitted under previous NOA No. 11–0616.06)
5. Statement letter of no financial interest, issued by MCY Engineering, Inc., dated 05/24/11, signed and sealed by Yiping Wang, P.E.
   (Submitted under previous NOA No. 11–0616.06)
6. Laboratory compliance letters for Test Reports No.'s **HETI–05–1436**, dated 02/18/05, **HETI–05–1965**, dated 11/25/05 and **HETI–05–2044**, dated 11/11/05, issued by Hurricane Engineering & Testing, Inc., signed and sealed by Ivonne Ghia, P. E.
   (Submitted under previous NOA No. 06–0406.13)
7. One year approval, subjected to successful verification test.

G. OTHERS

1. Notice of Acceptance No. **11–0616.06**, issued to New Age Windows & Doors Corp. for their Series "Aluminum Horizontal Sliding Window", approved on 11/10/11 and expiring on 11/23/16.

Jaime D. Gascon, P. E.
Product Control Section Supervisor
NOA No. 14–1224.07
Expiration Date: November 23, 2016
Approval Date: April 02, 2015

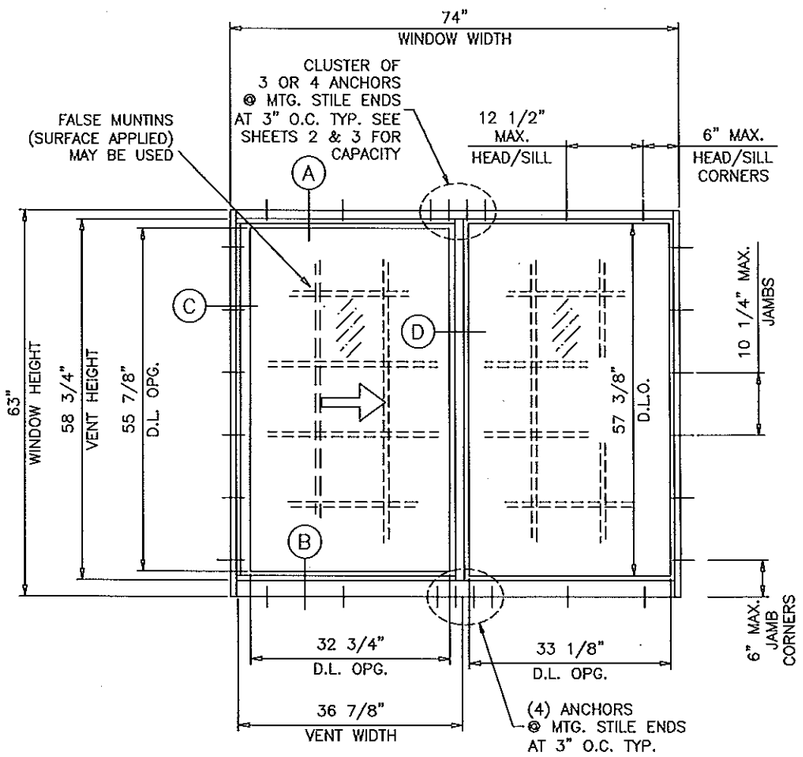

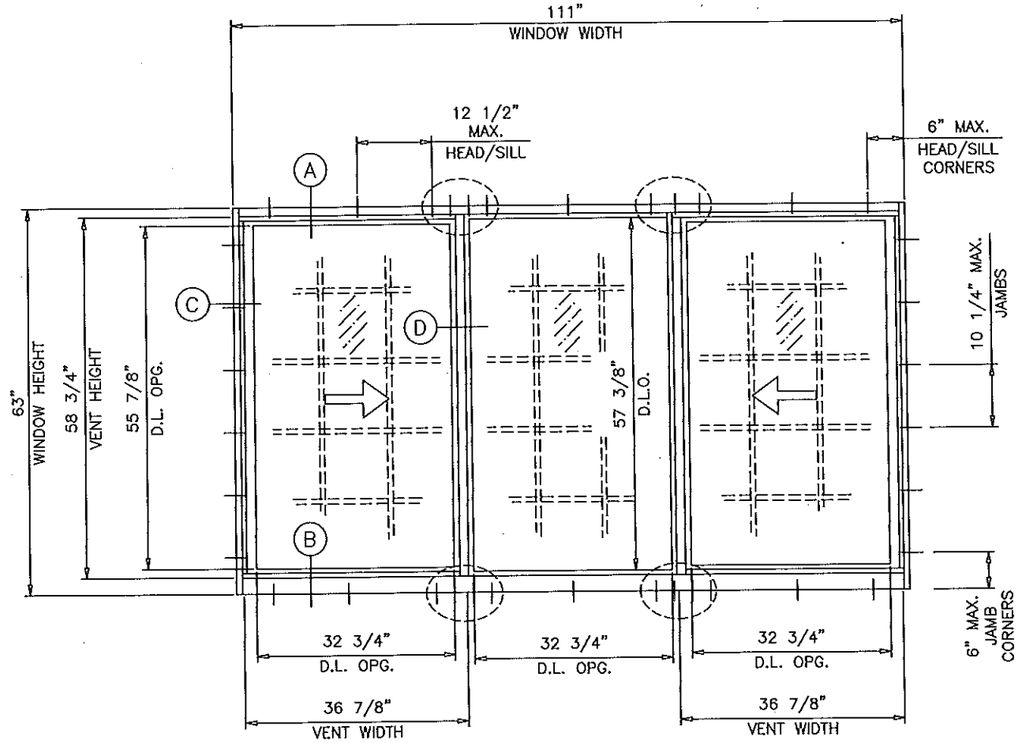

TYPICAL ELEVATIONS

ALUMINUM HORIZONTAL SLIDING WINDOW

DESIGN LOAD RATING FOR THESE WINDOWS TO BE AS PER CHARTS SHOWN ON SHEETS 2 & 3.

APPROVAL APPLIES TO SINGLE UNITS OR SIDE BY SIDE COMBINATIONS OF H.S./H.S. OR HORIZONTAL SLIDING WITH OTHER MIAMI–DADE COUNTY APPR'D WINDOWS USING MIAMI–DADE COUNTY APPROVED MULLIONS IN BETWEEN.
LOWER DESIGN PRESSURE FROM WINDOWS OR MULLION APPROVAL WILL APPLY TO ENTIRE SYSTEM.

THIS PRODUCT HAS BEEN DESIGNED AND TESTED TO COMPLY WITH THE REQUIREMENTS OF THE FLORIDA BUILDING CODE 2010/2014 EDITION INCLUDING HIGH VELOCITY HURRICANE ZONE.

WOOD BUCKS BY OTHERS, MUST BE ANCHORED PROPERLY TO TRANSFER LOADS TO THE STRUCTURE.

ANCHORS SHALL BE AS LISTED, SPACED AS SHOWN ON DETAILS, ANCHORS EMBEDMENT TO BASE MATERIAL SHALL BE BEYOND WALL DRESSING OR STUCCO.

ANCHORING OR LOADING CONDITIONS NOT SHOWN IN THESE DETAILS ARE NOT PART OF THIS APPROVAL.

A LOAD DURATION INCREASE IN ALLOWABLE STRESS IS USED IN DESIGN OF WOOD ANCHORS ONLY.

MATERIALS INCLUDING BUT NOT LIMITED TO STEEL/METAL SCREWS THAT COME INTO CONTACT WITH OTHER DISSIMILAR MATERIALS SHALL MEET THE REQUIREMENTS OF 2010/2014 FLORIDA BUILDING CODE SECTION AS APPLICABLE.

ULTIMATE DESIGN LOAD OBTAINED FROM ASCE 7–10, MULTIPLY BY 0.6 SHALL BE LESS THAN OR EQUAL TO DESIGN LOAD IN THIS DOCUMENT.

THESE WINDOWS ARE RATED FOR LARGE MISSILE IMPACT. SHUTTERS ARE NOT REQUIRED.

DEC 17 2014

PRODUCT REVISED
as complying with the Florida Building Code
Acceptance No. 14-1224.07
Expiration Date 11/23/2018
By
Miami Dade Product Control
MIAMI–DADE COUNTY

YIPING WANG, P.E.
FLORIDA REGISTRATION
PE #55983
C.A.N. 28677
STATE OF FLORIDA PROFESSIONAL ENGINEER

REVISIONS		
NO.	DATE	DESCRIPTION
1	12/17/14	UPDATE TO 2014 FBC

MCY ENGINEERING, INC.
GLAZING CONSULTANTS
8501 SW 124TH AVE.
MIAMI, FL 33183
P: 305.271.0117
F: 786.573.5063
www.MCYEngineering.com
MCY.Engineering@Att.net

ALUMINUM HORIZONTAL SLIDING WINDOWS - LMI
NEW AGE WINDOWS & DOORS CORP.
7196 NW 77TH TERRACE
MEDLEY, FL 33166
P: (305) 889 - 0703 F: (305) 889 - 0710

DATE	05-24-11
SCALE	AS NOTED
DRAWN	S.I.
PROJECT	MCY 11-014

DRAWING NO.
AD11--12

DESIGN LOAD CAPACITY – PSF (XO OR OX SIZES)
GLASS TYPE 'A'

WINDOW DIMS.		A	ANCHORS 'A'				ANCHORS 'B'	
			CLUSTER OF 3		CLUSTER OF 4		CLUSTER OF 3	
WIDTH	HEIGHT		EXT.(+)	1NT.(–)	EXT.(+)	1NT.(–)	EXT.(+)	1NT.(–)
24"	24" (3)	3	70.0	80.0	–	–	–	–
36"		5	70.0	80.0	–	–	–	–
48"		7	70.0	80.0	–	–	–	–
60"		7	70.0	80.0	–	–	–	–
72"		7	70.0	80.0	–	–	–	–
24"	36" (4)	3	70.0	80.0	–	–	–	–
36"		5	70.0	80.0	–	–	–	–
48"		7	70.0	80.0	–	–	–	–
60"		7	70.0	80.0	–	–	–	–
72"		7	70.0	80.0	–	–	–	–
24"	48" (5)	3	70.0	80.0	–	–	–	–
36"		5	70.0	80.0	–	–	–	–
48"		7	70.0	80.0	–	–	–	–
60"		7	70.0	80.0	–	–	–	–
72"		7	70.0	80.0	–	–	–	–
24"	60" (6)	3	70.0	80.0	–	–	–	–
36"		5	70.0	80.0	–	–	–	–
48"		7	70.0	80.0	–	–	–	–
60"		7	70.0	70.2	70.0	80.0	–	–
72"		7	63.2	63.2	70.0	80.0	–	–
26–1/2"	26" (3)	3	70.0	80.0	–	–	–	–
37"		5	70.0	80.0	–	–	–	–
53–1/8"		7	70.0	80.0	–	–	–	–
74"		7	70.0	80.0	–	–	–	–
26–1/2"	38–3/8" (4)	3	70.0	80.0	–	–	–	–
37"		5	70.0	80.0	–	–	–	–
53–1/8"		7	70.0	80.0	–	–	–	–
74"		7	70.0	80.0	–	–	–	–
26–1/2"	50–5/8" (6)	3	70.0	80.0	–	–	–	–
37"		5	70.0	80.0	–	–	–	–
53–1/8"		7	70.0	80.0	–	–	–	–
74"		7	70.0	80.0	–	–	–	–
26–1/2"	63" (6)	3	70.0	80.0	–	–	–	–
37"		5	70.0	80.0	–	–	–	–
53–1/8"		7	70.0	71.1	70.0	80.0	–	–
74"		7	57.7	57.7	70.0	76.9	70.0	80.0

A = NO. OF ANCHORS PER HEAD & SILL
( ) = NO. OF ANCHORS PER JAMB

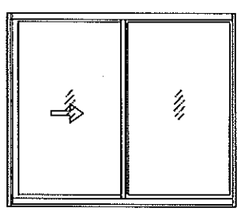

DESIGN LOAD CAPACITY – PSF (XOX SIZES)
GLASS TYPE 'A'

WINDOW DIMS.		A	ANCHORS 'A'				ANCHORS 'B'	
			CLUSTER OF 3		CLUSTER OF 4		CLUSTER OF 3	
WIDTH	HEIGHT		EXT.(+)	1NT.(–)	EXT.(+)	1NT.(–)	EXT.(+)	1NT.(–)
72"	24" (3)	11	70.0	80.0	–	–	–	–
84"		11	70.0	80.0	–	–	–	–
96"		11	70.0	80.0	–	–	–	–
108"		11	70.0	80.0	–	–	–	–
72"	36" (4)	11	70.0	80.0	–	–	–	–
84"		11	70.0	80.0	–	–	–	–
96"		11	70.0	80.0	–	–	–	–
108"		11	70.0	80.0	–	–	–	–
72"	48" (5)	11	70.0	80.0	–	–	–	–
84"		11	70.0	80.0	–	–	–	–
96"		11	70.0	80.0	–	–	–	–
108"		11	70.0	80.0	–	–	–	–
72"	60" (6)	11	70.0	80.0	–	–	–	–
84"		11	70.0	73.5	70.0	80.0	–	–
96"		11	67.5	67.5	70.0	80.0	–	–
108"		11	63.2	63.2	70.0	80.0	–	–
74" 106–1/4" 111"	26" (3)	11	70.0	80.0	–	–	–	–
		11	70.0	80.0	–	–	–	–
		11	70.0	80.0	–	–	–	–
74" 106–1/4" 111"	38–3/8" (4)	11	70.0	80.0	–	–	–	–
		11	70.0	80.0	–	–	–	–
		11	70.0	80.0	–	–	–	–
74" 106–1/4" 111"	50–5/8" (6)	11	70.0	80.0	–	–	–	–
		11	70.0	80.0	–	–	–	–
		11	70.0	80.0	–	–	–	–
74" 106–1/4" 111"	63" (6)	11	70.0	75.1	70.0	80.0	–	–
		11	59.1	59.1	70.0	78.8	70.0	80.0
		11	57.7	57.7	70.0	76.9	70.0	80.0

A = NO. OF ANCHORS PER HEAD & SILL
( ) = NO. OF ANCHORS PER JAMB

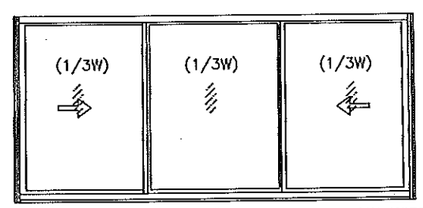

OPERATING VENTS TO BE 1/3 OF THE WINDOW WIDTH

DESIGN LOAD CAPACITY – PSF (XOX SIZES)
GLASS TYPE 'A'

WINDOW DIMS.		A	ANCHORS 'A'			
			CLUSTER OF 3		CLUSTER OF 4	
WIDTH	HEIGHT		EXT.(+)	1NT.(–)	EXT.(+)	1NT.(–)
72"	24" (3)	9	70.0	80.0	–	–
84"		10	70.0	80.0	–	–
96"		12	70.0	80.0	–	–
108"		12	70.0	80.0	–	–
72"	36" (4)	9	70.0	80.0	–	–
84"		10	70.0	80.0	–	–
96"		12	70.0	80.0	–	–
108"		12	70.0	80.0	–	–
72"	48" (5)	9	70.0	80.0	–	–
84"		10	70.0	80.0	–	–
96"		12	70.0	80.0	–	–
72"	60" (6)	9	70.0	78.0	70.0	80.0
74" 106–1/4" 111"	26" (3)	9	70.0	80.0	–	–
		12	70.0	80.0	–	–
		12	70.0	80.0	–	–
74" 106–1/4" 111"	38–3/8" (4)	9	70.0	80.0	–	–
		12	70.0	80.0	–	–
		12	70.0	80.0	–	–
74"	50–5/8"(6)	9	70.0	80.0	–	–
74"	63" (6)	9	70.0	71.4	70.0	80.0

A = NO. OF ANCHORS PER HEAD & SILL
( ) = NO. OF ANCHORS PER JAMB

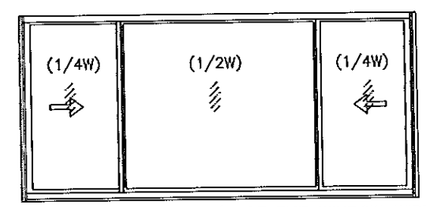

OPERATING VENTS TO BE 1/4 OF THE WINDOW WIDTH

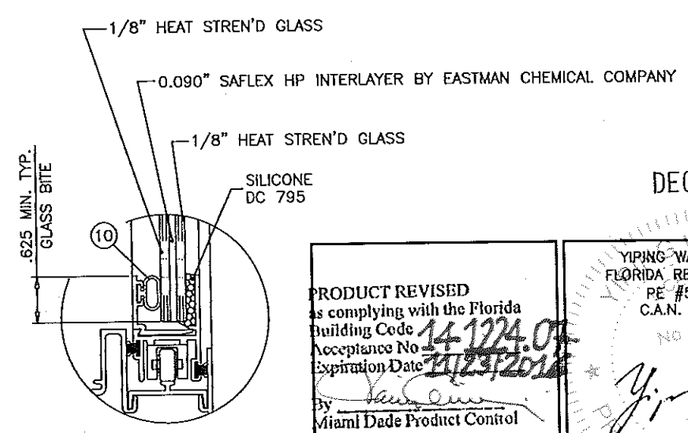

GLASS TYPE 'A'

GLASS CAPACITIES ON THIS SHEET ARE BASED ON ASTM E1300–04 (3 SEC. GUSTS) WITH REDUCTIONS FOR FLEXIBLE SUPPORTS TO COMPLY WITH SECTION 2403.3 OF FBC 2010/2014 EDITION.

PRODUCT REVISED
as complying with the Florida
Building Code
Acceptance No. 14-1124.01
Expiration Date 11/23/2017
By
Miami Dade Product Control
MIAMI–DADE COUNTY

DEC 17 2014

YIPING WANG, P.E.
FLORIDA REGISTRATION
PE #55983
C.A.N. 28677
No 55983
STATE OF FLORIDA
PROFESSIONAL ENGINEER

REVISIONS		
NO.	DATE	DESCRIPTION
1	12/17/14	UPDATE TO 2014 FBC

MCY ENGINEERING, INC.
GLAZING CONSULTANTS
8501 SW 124TH AVE.
MIAMI, FL 33183
P: 305.271.0117
F: 786.573.5063
MCY.Engineering@Att.net
www.MCYEngineering.com

ALUMINUM HORIZONTAL SLIDING WINDOWS - LMI
NEW AGE WINDOWS & DOORS CORP.
7196 NW 77TH TERRACE
MEDLEY, FL 33166
P: (305) 889 - 0703 F: (305) 889 - 0710

DATE	05-24-11
SCALE	AS NOTED
DRAWN	S.L.
PROJECT	MCY 11-014
DRAWING NO.	AD11–12

DESIGN LOAD CAPACITY – PSF (XO OR OX SIZES)
GLASS TYPE 'A'

WINDOW DIMS.		A	ANCHORS 'A'				ANCHORS 'B'	
			CLUSTER OF 3		CLUSTER OF 4		CLUSTER OF 3	
WIDTH	HEIGHT		EXT.(+)	INT.(–)	EXT.(+)	INT.(–)	EXT.(+)	INT.(–)
24"	24" (3)	3	80.0	90.0	–	–	–	–
36"		5	80.0	90.0	–	–	–	–
48"		7	80.0	90.0	–	–	–	–
60"		7	80.0	90.0	–	–	–	–
72"		7	80.0	90.0	–	–	–	–
24"	36" (4)	3	80.0	90.0	–	–	–	–
36"		5	80.0	90.0	–	–	–	–
48"		7	80.0	90.0	–	–	–	–
60"		7	80.0	90.0	–	–	–	–
72"		7	80.0	90.0	–	–	–	–
24"	48" (5)	3	80.0	90.0	–	–	–	–
36"		5	80.0	90.0	–	–	–	–
48"		7	80.0	90.0	–	–	–	–
60"		7	80.0	90.0	–	–	–	–
72"		7	80.0	90.0	–	–	–	–
24"	60" (6)	3	80.0	90.0	–	–	–	–
36"		5	80.0	90.0	–	–	–	–
48"		7	80.0	81.8	80.0	90.0	–	–
60"		7	70.2	70.2	80.0	90.0	–	–
72"		7	63.2	63.2	76.2	84.2	76.2	87.1
26-1/2"	26" (3)	3	80.0	90.0	–	–	–	–
37"		5	80.0	90.0	–	–	–	–
53-1/8"		7	80.0	90.0	–	–	–	–
74"		7	80.0	90.0	–	–	–	–
26-1/2"	38-3/8" (4)	3	80.0	90.0	–	–	–	–
37"		5	80.0	90.0	–	–	–	–
53-1/8"		7	80.0	90.0	–	–	–	–
74"		7	80.0	90.0	–	–	–	–
26-1/2"	50-5/8" (6)	3	80.0	90.0	–	–	–	–
37"		5	80.0	90.0	–	–	–	–
53-1/8"		7	80.0	90.0	–	–	–	–
74"		7	80.0	83.3	80.0	90.0	–	–
26-1/2"	63" (6)	3	80.0	90.0	–	–	–	–
37"		5	80.0	90.0	–	–	–	–
53-1/8"		7	71.1	71.1	80.0	90.0	–	–
74"		7	57.7	57.7	70.0	76.9	70.0	80.0

A = NO. OF ANCHORS PER HEAD & SILL
( ) = NO. OF ANCHORS PER JAMB

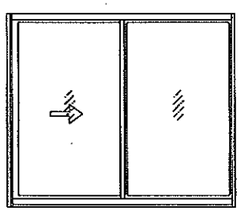

DESIGN LOAD CAPACITY – PSF (XOX SIZES)
GLASS TYPE 'B'

WINDOW DIMS.		A	ANCHORS 'A'				ANCHORS 'B'	
			CLUSTER OF 3		CLUSTER OF 4		CLUSTER OF 3	
WIDTH	HEIGHT		EXT.(+)	INT.(–)	EXT.(+)	INT.(–)	EXT.(+)	INT.(–)
72"	24" (3)	11	80.0	90.0	–	–	–	–
84"		11	80.0	90.0	–	–	–	–
96"		11	80.0	90.0	–	–	–	–
108"		11	80.0	90.0	–	–	–	–
72"	36" (4)	11	80.0	90.0	–	–	–	–
84"		11	80.0	90.0	–	–	–	–
96"		11	80.0	90.0	–	–	–	–
108"		11	80.0	90.0	–	–	–	–
72"	48" (5)	11	80.0	90.0	–	–	–	–
84"		11	80.0	90.0	–	–	–	–
96"		11	80.0	90.0	–	–	–	–
108"		11	80.0	90.0	–	–	–	–
72"	60" (6)	11	80.0	81.8	80.0	90.0	–	–
84"		11	73.5	73.5	80.0	90.0	–	–
96"		11	67.5	67.5	80.0	90.0	–	–
108"		11	63.2	63.2	76.2	84.2	76.2	87.1
74" 106-1/4" 111"	26" (3)	11	80.0	90.0	–	–	–	–
		11	80.0	90.0	–	–	–	–
		11	80.0	90.0	–	–	–	–
74" 106-1/4" 111"	38-3/8" (4)	11	80.0	90.0	–	–	–	–
		11	80.0	90.0	–	–	–	–
		11	80.0	90.0	–	–	–	–
74" 106-1/4" 111"	50-5/8" (6)	11	80.0	90.0	–	–	–	–
		11	80.0	84.4	80.0	90.0	–	–
		11	80.0	83.0	80.0	90.0	–	–
74" 106-1/4" 111"	63" (6)	11	75.1	75.1	80.0	90.0	–	–
		11	59.1	59.1	71.9	78.8	71.9	82.1
		11	57.7	57.7	70.0	76.9	70.0	80.0

A = NO. OF ANCHORS PER HEAD & SILL
( ) = NO. OF ANCHORS PER JAMB

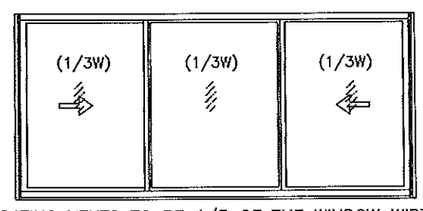

OPERATING VENTS TO BE 1/3 OF THE WINDOW WIDTH

DESIGN LOAD CAPACITY – PSF (XOX SIZES)
GLASS TYPE 'B'

WINDOW DIMS.		A	ANCHORS 'A'			
			CLUSTER OF 3		CLUSTER OF 4	
WIDTH	HEIGHT		EXT.(+)	INT.(–)	EXT.(+)	INT.(–)
72"	24" (3)	9	80.0	80.0	–	–
84"		10	80.0	80.0	–	–
96"		12	80.0	80.0	–	–
108"		12	80.0	80.0	–	–
72"	36" (4)	9	80.0	80.0	–	–
84"		10	80.0	80.0	–	–
96"		12	80.0	80.0	–	–
108"		12	80.0	80.0	–	–
72"	48" (5)	9	80.0	80.0	–	–
84"		10	80.0	80.0	–	–
96"		12	80.0	80.0	–	–
72"	60" (6)	9	78.0	78.0	70.0	80.0
74" 106-1/4" 111"	26" (3)	9	80.0	80.0	–	–
		12	80.0	80.0	–	–
		12	80.0	80.0	–	–
74" 106-1/4" 111"	38-3/8" (4)	9	80.0	80.0	–	–
		12	80.0	80.0	–	–
		12	80.0	80.0	–	–
74"	50-5/8"(6)	9	80.0	80.0	–	–
74"	63" (6)	9	71.4	71.4	70.0	80.0

A = NO. OF ANCHORS PER HEAD & SILL
( ) = NO. OF ANCHORS PER JAMB

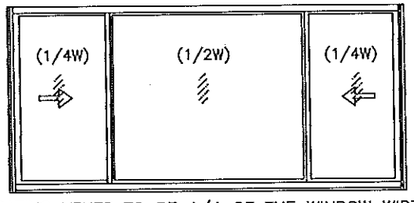

OPERATING VENTS TO BE 1/4 OF THE WINDOW WIDTH

GLASS CAPACITIES ON THIS SHEET ARE BASED ON ASTM E1300-04 (3 SEC. GUSTS) WITH REDUCTIONS FOR FLEXIBLE SUPPORTS TO COMPLY WITH SECTION 2403.3 OF FBC 2010/2014 EDITION.

ALL EXTERIOR(+) LOADS SHOWN ON THIS SHEET ARE FOR WINDOWS WITH APPLIED RISER AT FRAME SILL

FOR STD. SILL (NO RISER) LIMIT EXTERIOR(+) LOADS TO 70.0 PSF

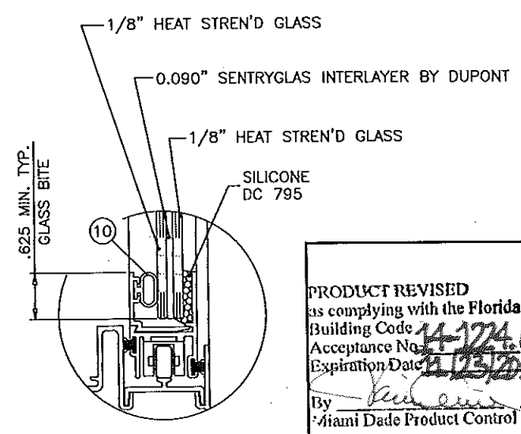

GLASS TYPE 'B'

DEC 17 2014

PRODUCT REVISED
as complying with the Florida Building Code
Acceptance No. 14-1224.07
Expiration Date 11/25/2016
By
Miami Dade Product Control
MIAMI-DADE COUNTY

YIPING WANG, P.E.
FLORIDA REGISTRATION
PE #55983
C.A.N. 28677

REVISIONS		
NO.	DATE	DESCRIPTION
1	12/17/14	UPDATE TO 2014 FBC

MCY ENGINEERING, INC.
GLAZING CONSULTANTS
8501 SW 124TH AVE.
MIAMI, FL. 33183
P: 305.271.0117
F: 786.573.5063
MCY.Engineering@Att.net
www.MCYEngineering.com

ALUMINUM HORIZONTAL SLIDING WINDOWS - LMI
NEW AGE WINDOWS & DOORS CORP.
7196 NW 77TH TERRACE
MEDLEY, FL 33166
P: (305) 889 - 0703 F: (305) 889 - 0710

DATE	05-24-11
SCALE	AS NOTED
DRAWN	S.I.
PROJECT	MCY 11-014

DRAWING NO.
AD11-12

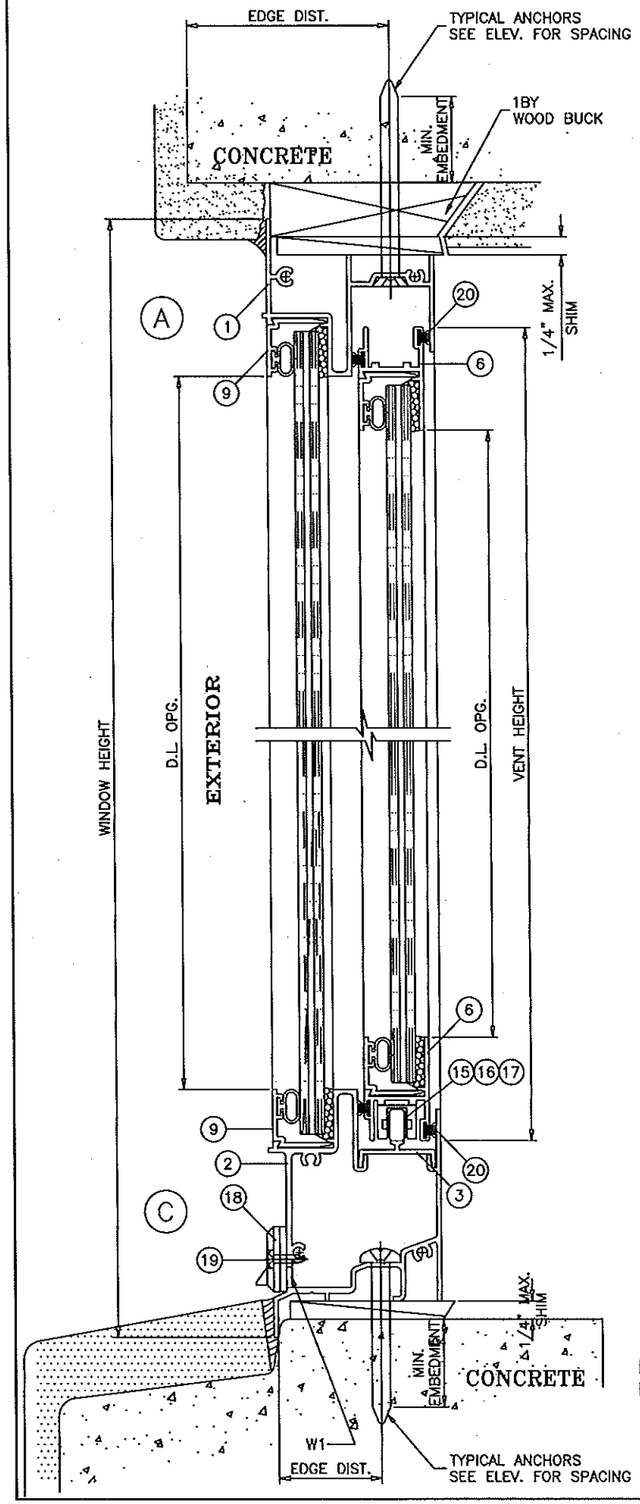

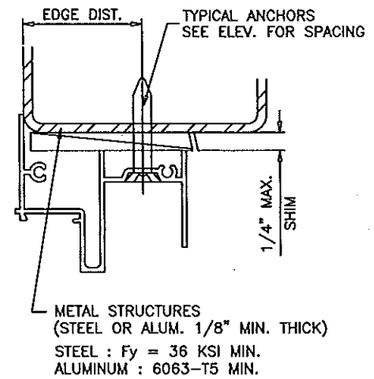

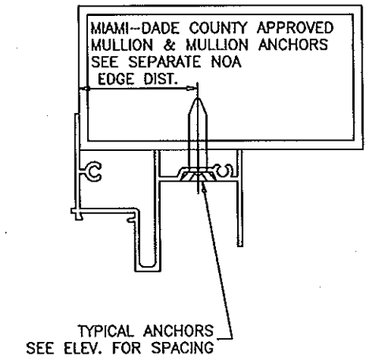

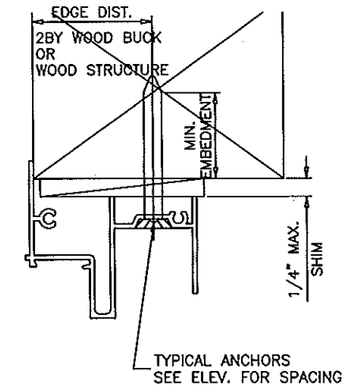

WOOD BUCKS AND METAL STRUCTURE NOT BY NEW AGE, MUST SUSTAIN LOADS IMPOSED BY GLAZING SYSTEM AND TRANSFER THEM TO THE BUILDING STRUCTURE.

TYPICAL ANCHORS: SEE ELEV. FOR SPACING

ANCHORS 'A': 1/4" TAPCONS (Fu=120 Ksi Fy=92 Ksi)

INTO 2BY WOOD BUCKS OR WOOD STRUCTURES
1-1/2" MIN. PENETRATION INTO WOOD

THRU 1BY WOOD BUCKS INTO CONC. OR MASONRY
1-1/4" MIN. EMBED INTO CONC. OR MASONRY

DIRECTLY INTO CONC. OR MASONRY
1-1/4" MIN. EMBED INTO CONC. OR MASONRY

ANCHORS 'B': #14 SMS OR SELF DRILLING SCREWS
(Fu=74 Ksi Fy=57 Ksi)
INTO METAL STRUCTURES (1/8" MIN. THICKNESS)
(1/4" MAX. SHIM SPACE)

INTO DADE COUNTY APPROVED MULLIONS
(NO SHIM SPACE)

ANCHORS 'B': 5/16" TAPCONS AT FRAME HEAD ONLY
(Fu=120 Ksi Fy=92 Ksi)

INTO 2BY WOOD BUCKS OR WOOD STRUCTURES
1-1/2" MIN. PENETRATION INTO WOOD

THRU 1BY WOOD BUCKS INTO CONC. OR MASONRY
1-1/4" MIN. EMBED INTO CONC. OR MASONRY

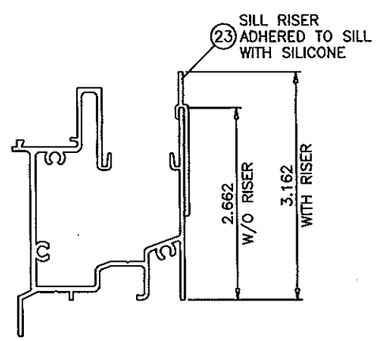

FOR WINDOWS WITHOUT SILL RISER LIMIT EXTERIOR LOADS TO +70.0 PSF

MIN. EDGE DISTANCE

INTO CONCRETE AND MASONRY = 1-7/16" MIN.
INTO WOOD STRUCTURE = 1" MIN
INTO METAL STRUCTURE = 3/4" MIN.

CONCRETE: fc'=3000 PSI MIN.
MASONRY: fc'=1600 PSI MIN.

SEALANTS:

ALL JOINTS AND FRAME CONNECTIONS SEALED WITH SCHNEE MOREHEAD SEAM SEALER.

WEEPHOLES:

W1 = 1-3/4" X 1/4" WEEPHOLES AT 6-1/2" FROM EACH END WITH PLASTIC BAFFLE

PRODUCT REVISED
as complying with the Florida Building Code
Acceptance No. 14-1224.07
Expiration Date 11/23/2016
By
Miami Dade Product Control
MIAMI-DADE COUNTY

YIPING WANG, P.E.
FLORIDA REGISTRATION
PE #55983
C.A.N. 28677
STATE OF FLORIDA
PROFESSIONAL ENGINEER

REVISIONS		
NO.	DATE	DESCRIPTION
1	12/17/14	UPDATE TO 2014 FBC

MCY ENGINEERING, INC.
GLAZING CONSULTANTS
8501 SW 124TH AVE.
MIAMI, FL 33183
P: 305.271.0117
F: 786.573.5063
www.MCYEngineering.com
MCY.Engineering@Att.net

ALUMINUM HORIZONTAL SLIDING WINDOWS - LMI

NEW AGE WINDOWS & DOORS CORP.
7196 NW 77TH TERRACE
MEDLEY, FL 33166
P: (305) 889 - 0703 F: (305) 889 - 0710

DATE	05-24-11
SCALE	AS NOTED
DRAWN	S.L.
PROJECT	MCY 11-014

DRAWING NO.
AD11-12

4 OF 7

DEC 17 2014

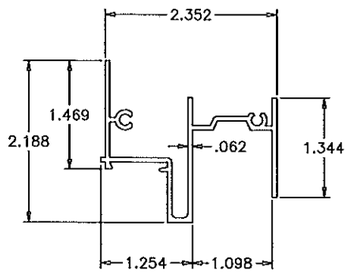

1 FRAME HEAD

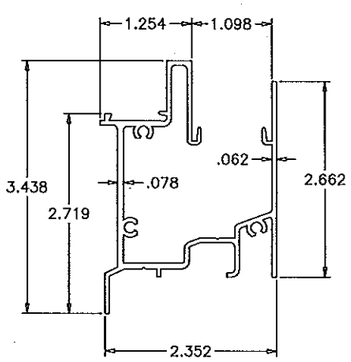

2 FRAME SILL

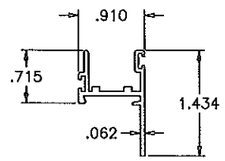

6 VENT TOP/BOTTOM RAIL

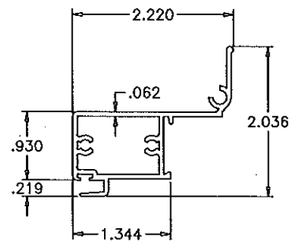

8 JAMB STILE

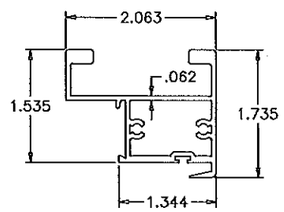

7 MEETING STILE

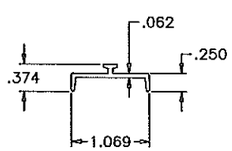

3 SILL TRACK

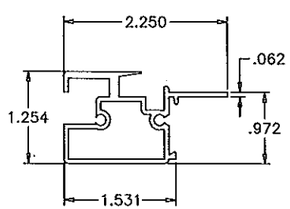

5 FIXED MTG. STILE

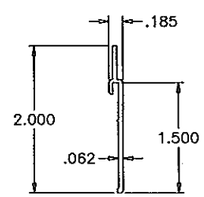

23 SILL RISER

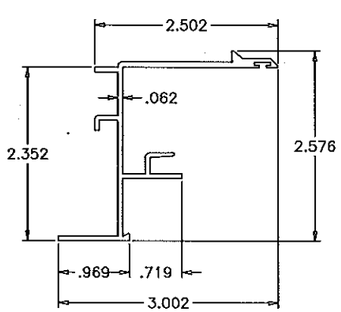

4 FRAME JAMB

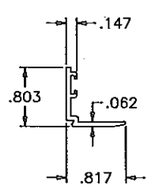

9 GLAZING BEAD

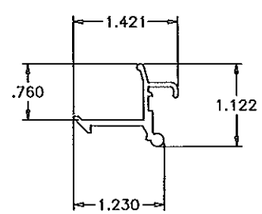

12 SPRING LATCH

ITEM	PART #	QUANTITY	DESCRIPTION	MATERIAL	MANF./SUPPLIER/REMARKS
1	NA-203	1	FRAME HEAD	6063-T5	–
2	NA-301	1	FRAME SILL	6063-T5	–
3	NA-302	1	SILL TRACK	6063-T5	–
4	NA-303	2	FRAME JAMB	6063-T5	–
5	NA-204	1/ VENT	FIXED MTG. RAIL	6063-T5	–
6	NA-207	2/ VENT	VENT TOP & BOTTOM RAIL	6063-T5	–
7	NA-210	1/ VENT	VENT INTERLOCK	6063-T5	–
8	NA-206	1/ VENT	VENT JAMB STILE	6063-T5	–
9	NA-208	AS REQD.	GLAZING BEAD	6063-T5	–
10	–	AS REQD.	GLAZING GASKET	VINYL	–
11	–	2/ VENT	SWEEP LATCH	–	AT 15-1/2" FROM EACH END
12	NA-209	2/ VENT	SPRING LATCH	–	AT 15-1/2" FROM EACH END
13	–	AS REQD.	FRAME & VENT ASSY SCREWS	–	#8 X 3/4" PH SMS
14	–	2/ VENT	SILL END FIXED RAIL SCREW	–	#8 X 3-1/2" PH SMS
15	NA-304	4/ VENT	ROLLER HOUSING & GUIDE	–	–
16	NA-305	2/ VENT	ROLLER	–	BRASS OR ST. STEEL
17	NA-306	2/ VENT	ROLLER PIN	ST. STEEL	–
18	WPHL-100	2	BAFFLE	–	M & M PLASTICS
19	–	2/ BAFFLE	BAFFLE SCREW	–	#6 X 1/2" PH SMS
20	W222313K	AS REQD.	VENT & FIX. RAIL W'STRIPPING	–	ULTRAFAB
21	W222913K	AS REQD.	FRAME JAMB W'STRIPPING	–	ULTRAFAB
22	–	OPTIONAL	SCREEN	–	5/16" BOX
23	–	AS REQD.	SILL RISER	6063-T5	–

REVISIONS

NO.	DATE	DESCRIPTION
1	12/17/14	UPDATE TO 2014 FBC

MCY ENGINEERING, INC.
GLAZING CONSULTANTS
8501 SW 124TH AVE.
MIAMI, FL 33183
P: 305.271.0117
F: 786.573.5063
MCY.Engineering@Att.net
www.MCYEngineering.com

ALUMINUM HORIZONTAL SLIDING WINDOWS - LMI

NEW AGE WINDOWS & DOORS CORP.
7196 NW 77TH TERRACE
MEDLEY, FL 33166
P: (305) 889 - 0703 F: (305) 889 - 0710

DEC 17 2014

PRODUCT REVISED
as complying with the Florida
Building Code
Acceptance No. 11-1224.07
Expiration Date 11/23/2016
By
Miami Dade Product Control

MIAMI-DADE COUNTY

YIPING WANG, P.E.
FLORIDA REGISTRATION
PE #55983
C.A.N. 28677

DATE	05-24-11
SCALE	AS NOTED
DRAWN	S.L.
PROJECT	MCY 11-014

DRAWING NO.
AD11-12

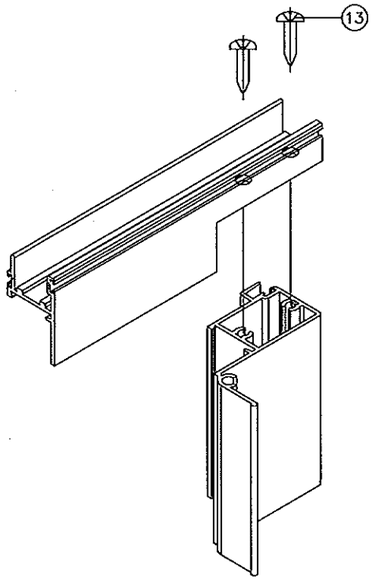

VENT TOP/BOTTOM CORNERS

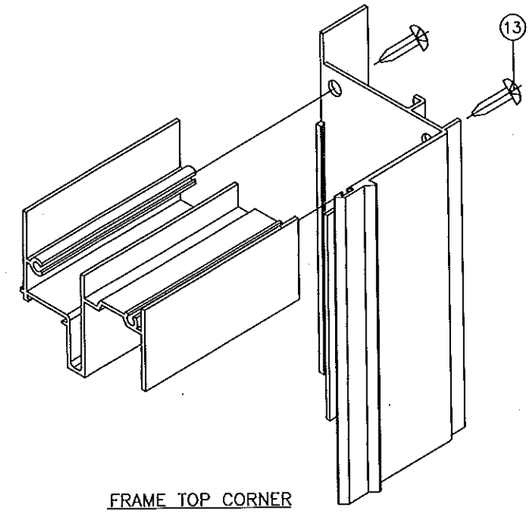

FRAME TOP CORNER

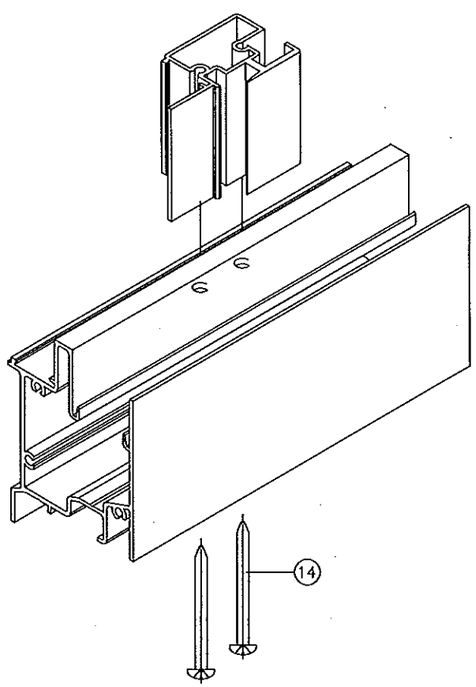

FIXED MTG. RAIL CORNER

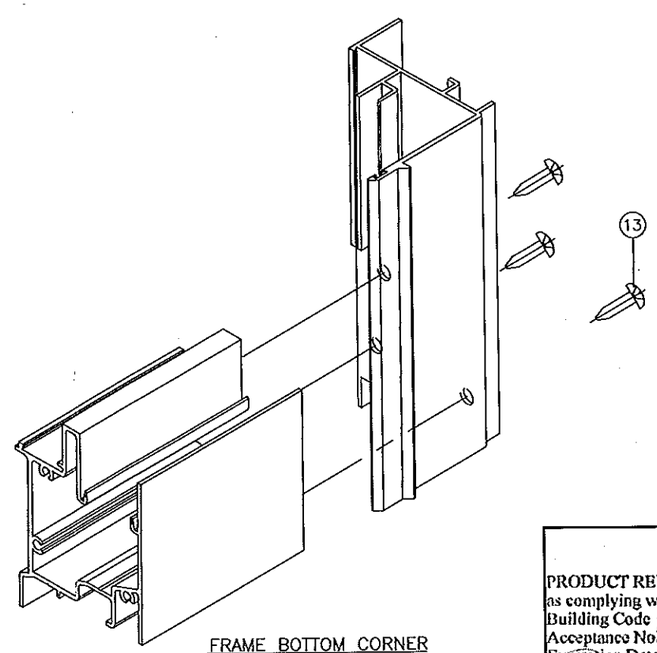

FRAME BOTTOM CORNER

DEC 17 2014

PRODUCT REVISED
as complying with the Florida
Building Code
Acceptance No. 14-1224.07
Expiration Date 11/23/2016
By
Miami Dade Product Control

MIAMI–DADE COUNTY

YIPING WANG, P.E.
FLORIDA REGISTRATION
PE #55983
C.A.N. 28677

YIPING WANG
NO. 55983
STATE OF FLORIDA
PROFESSIONAL ENGINEER

REVISIONS		
NO.	DATE	DESCRIPTION
1	12/17/14	UPDATE TO 2014 FBC

MCY ENGINEERING, INC.
GLAZING CONSULTANTS
8501 SW 124TH AVE.
MIAMI, FL. 33183
P: 305.271.0117
F: 786.573.5063
www.MCYEngineering.com
MCY.Engineering@Att.net

ALUMINUM HORIZONTAL SLIDING WINDOWS - LMI

NEW AGE WINDOWS & DOORS CORP.
7196 NW 77TH TERRACE
MEDLEY, FL 33166
P: (305) 889 - 0703 F: (305) 889 - 0710

DATE	05-24-11
SCALE	AS NOTED
DRAWN	S.L
PROJECT	MCY 11-014

DRAWING NO.
AD11-12