MIAMI-DADE COUNTY
PRODUCT CONTROL SECTION
11805 SW 26 Street, Room 208
Miami, Florida 33175-2474
T (786) 315-2590 F (786) 315-2599
www.miamidade.gov/economy

DEPARTMENT OF REGULATORY AND ECONOMIC RESOURCES (RER)
BOARD AND CODE ADMINISTRATION DIVISION

NOTICE OF ACCEPTANCE (NOA)

Aldora Aluminum & Glass Product, Inc.
11500 Miramar Parkway, Suite # 300
Miramar, FL 33025

SCOPE:

This NOA is being issued under the applicable rules and regulations governing the use of construction materials. The documentation submitted has been reviewed and accepted by Miami-Dade County RER -Product Control Section to be used in Miami Dade County and other areas where allowed by the Authority Having Jurisdiction (AHJ).

This NOA shall not be valid after the expiration date stated below. The Miami-Dade County Product Control Section (In Miami Dade County) and/or the AHJ (in areas other than Miami Dade County) reserve the right to have this product or material tested for quality assurance purposes. If this product or material fails to perform in the accepted manner, the manufacturer will incur the expense of such testing and the AHJ may immediately revoke, modify, or suspend the use of such product or material within their jurisdiction. RER reserves the right to revoke this acceptance, if it is determined by Miami-Dade County Product Control Section that this product or material fails to meet the requirements of the applicable building code.

This product is approved as described herein, and has been designed to comply with the Florida Building Code, including the High Velocity Hurricane Zone.

DESCRIPTION: Series "Summit" Aluminum Entrance Door w/wo Transom-L.M.I

APPROVAL DOCUMENT: Drawing No. **W12-46 Rev D**, titled "Series SUMMIT Alum Outswing Door (L.M.I)", sheets 1 thru 8, 8.1, 9, 9.1, 9.2 & 10 thru 13 of 13, prepared by the Al-Farooq Corporation, dated 08/09/12 and last revised on JUN 25, 2015, signed and sealed by Javad Ahmad, P.E., bearing the Miami-Dade County Product Control Revision stamp with the Notice of Acceptance number and expiration date by the Miami-Dade County Product Control Section.

MISSILE IMPACT RATING: Large and Small Missile Impact

Limitations:

1. See Door Pressure (DP) Vs. Stile, locks & glass options, in sheet 2 for X & XX doors and sheet 4 for O/X and O/XX doors w/wo Reinf. Transom bar.
2. Lower design pressure shall control, when door or door w/ transom is mulled to storefront system, the vertical mullion end anchors to be specified per tributary load and to be reviewed by Bldg. official.
3. ADA thresholds are not rated for water infiltration, unless covered by overhang or canopy complying w/ FBC.
4. Glass lites wider than 36" shall have setting blocks per FBC requirements. CMU (Masonry) is applicable to Jamb.
5. Private labelling is not part of this NOA.

LABELING: Each unit shall bear a permanent label with the manufacturer's name or logo, city, state and series and following statement: "Miami-Dade County Product Control Approved", noted herein.

RENEWAL of this NOA shall be considered after a renewal application has been filed and there has been no change in the applicable building code negatively affecting the performance of this product.

TERMINATION of this NOA will occur after the expiration date or if there has been a revision or change in the materials, use, and/or manufacture of the product or process. Misuse of this NOA as an endorsement of any product, for sales, advertising or any other purposes shall automatically terminate this NOA. Failure to comply with any section of this NOA shall be cause for termination and removal of NOA.

ADVERTISEMENT: The NOA number preceded by the words Miami-Dade County, Florida, and followed by the expiration date may be displayed in advertising literature. If any portion of the NOA is displayed, then it shall be done in its entirety.

INSPECTION: A copy of this entire NOA shall be provided to the user by the manufacturer or its distributors and shall be available for inspection at the job site at the request of the Building Official.

This NOA **revises NOA # 13-1021.08** and consists of this page 1 and evidence pages E-1 & E-2, as well as approval document mentioned above.

The submitted documentation was reviewed by **Ishaq I. Chanda, P.E.**

MIAMI-DADE COUNTY APPROVED

6/26/15

NOTICE OF ACCEPTANCE: EVIDENCE SUBMITTED

A. DRAWINGS

1. Manufacturer's die drawings and sections.
2. Drawing No. **W12-46 Rev D**, titled "Series SUMMIT Alum Outswing Door (L.M.I)", sheets 1 through 8, 8.1, 9, 9.1, 9.2 & 10 through 13 of 13, prepared by the Al-Farooq Corporation, dated 08/09/12 and last revised on JUN 25, 2015, signed and sealed by Javad Ahmad, P.E.

B. TESTS (Submitted under files #**13-1021.08** /#**12-0911.03**)

1. Test reports on: 1) Air Infiltration Test, per FBC, TAS 202-94
2) Uniform Static Air Pressure Test, Loading per FBC TAS 202-94
3) Water Resistance Test, per FBC, TAS 202-94
4) Large Missile Impact Test per FBC, TAS 201-94
5) Cyclic Wind Pressure Loading per FBC, TAS 203-94
6) Forced Entry Test, per FBC 2411 3.2.1, TAS 202-94

along with marked-up drawings and installation diagram of an aluminum outswinging XX & O/XX door systems, prepared by Fenestration Testing Laboratory, Inc., Test Report No. **FTL-6248**, dated 03/29/12, signed and sealed by Marlin D. Brinson P.E., respectively.

2. SMI Doors Reference test reports No **(s) FTL-3603**, **FTL-3997** and **FTL-6348** per TAS 201, 202 & 203-94.

3. SMI Window wall sys, Reference test report No. **FTL-3833** per TAS 201/202 & 203-94.

C. CALCULATIONS

1. Anchor verification calculations and structural analysis, complying with FBC 2014 (**5th edition**), prepared by Al-Farooq Corporation, dated 12/16/14 and last revised on JUN 11, 2014, signed and sealed by Javad Ahmad, P.E.
2. Anchor verification calculations and structural analysis, complying with FBC 2010, prepared by Al-Farooq Corporation, dated 10/02/13 and last revised on DEC 13, 2012, signed and sealed by Javad Ahmad, P.E. (Submitted under files #**13-1021.08**)
3. Glazing complies w/ ASTME-1300-02, -04 & -09.

D. QUALITY ASSURANCE

1. Miami Dade Department of Regulatory and Economic Resources (RER).

E. MATERIAL CERTIFICATIONS

1. Notice of Acceptance No. **12-1231.10** issued to Eastman chemical Company (MA) former Solutia Inc. for their "**Saflex Clear or colored interlayer**", expiring on 05/21/16.
2. Notice of Acceptance No.**12-0130.01**, issued to Cytec Industries Inc. for "Uvekol S laminated glass interlayer", expiring on 02/08/2014.

Ishaq I. Chanda

Ishaq I. Chanda, P.E.
Product Control Examiner
NOA No. 15-0106.04
Expiration Date: January 10, 2018
Approval Date: July 01, 2015

NOTICE OF ACCEPTANCE: EVIDENCE SUBMITTED

F. STATEMENTS (Except item #1, all other items submitted under files **#13-1021.08 /#12-0911.03**)

1. Statement letter of conformance to FBC 2014 (**5th** edition) and letter of no financial interest, prepared by Al Farooq Corporation, dated DEC 16, 2014, signed and sealed by Javad Ahmad, P.E.
2. Statement letter of conformance to FBC 2010 and letter of no financial interest, prepared by Al Farooq Corporation, dated 10/02/13, signed and sealed by Javad Ahmad, P.E.
3. Statement letter of conformance to FBC 2010 and letter of no financial interest, prepared by Al-Farooq Corporation, dated SEP 05, 2012, signed and sealed by Javad Ahmad, P.E. (Submitted under files **#12-0911.03**)
4. Statement of Lab compliance, as part of the above referenced test reports.
5. Bill of Sale dated July 26, 2013 between SMI Aluminum Systems, LLC (Subsidiaries) and Holdco Aldora Holding LLC (Contributor, for benefits of Aldora Aluminum & Glass Product Inc) contribute, assigned and transferred to Holdco assets, signed by Scott Hauncher, VP Aldora Holding, Inc.
6. Assignment & Assumption agreement dated July 26, 2013 between SMI Aluminum System, LLC (Assignor), Architectural Glass Products, LLC (Assignor) and Aldora Holding Inc. (Assignee) signed by Leon Silverstein, manager Aldora Holding Inc. , Leon Silverstein , manager SMI Aluminum Systems, LLC, Leon Silverstein, manager Architectural Glass Products, LLC and Scott Hauncher, VP Aldora Holding, Inc. on behalf of their companies.
7. Statement letter dated 08/21/2013, issued by SMI Aluminum System, LLC of sales of asset and relinquishing of all rights of NOA **#12-0911.03**, signed by Manny Valladares, for and on behalf of SMI Aluminum Systems, LLC.
8. Statement letter dated 08/21/2013, issued by Aldora Aluminum & Glass products, Inc. of legally purchase of asset and rights of NOA **#12-0911.03** from SMI Aluminum System, LLC and requesting that NOA be issued with their name, signed by Manny Valladares, for and on behalf of Aldora Aluminum & Glass Products, Inc.

G. OTHER

1. This NOA **revises NOA # 13-1021.08 (# 12-0911.03** Former **SMI Aluminum Systems, LLC**), expiring on DEC 04, 2018.
2. Reference NOA(s) NOA # **08-1202.14 (MK-2), #11-1219.13 (MK-2), # 10-0511.02 (K2LM), #11-1208.01 (K2LM)** and **#11-0316.05 (K2LM).**
3. Test proposals dated 07/27/12, # **10-0509** dated 06/24/10 and # **03-0384** dated June 11, 2003 approved by BCCO.

Ishaq I. Chanda

Ishaq I. Chanda, P.E.
Product Control Examiner
NOA No. 15-0106.04
Expiration Date: January 10, 2018
Approval Date: July 01, 2015

TOTAL NO. OF ANCHORS AT MTG. STILE ENDS	
SUBSTRATE	FOR FRAME HT. UPTO 120 IN.
WOOD	7
CONCRETE	5
METAL	5

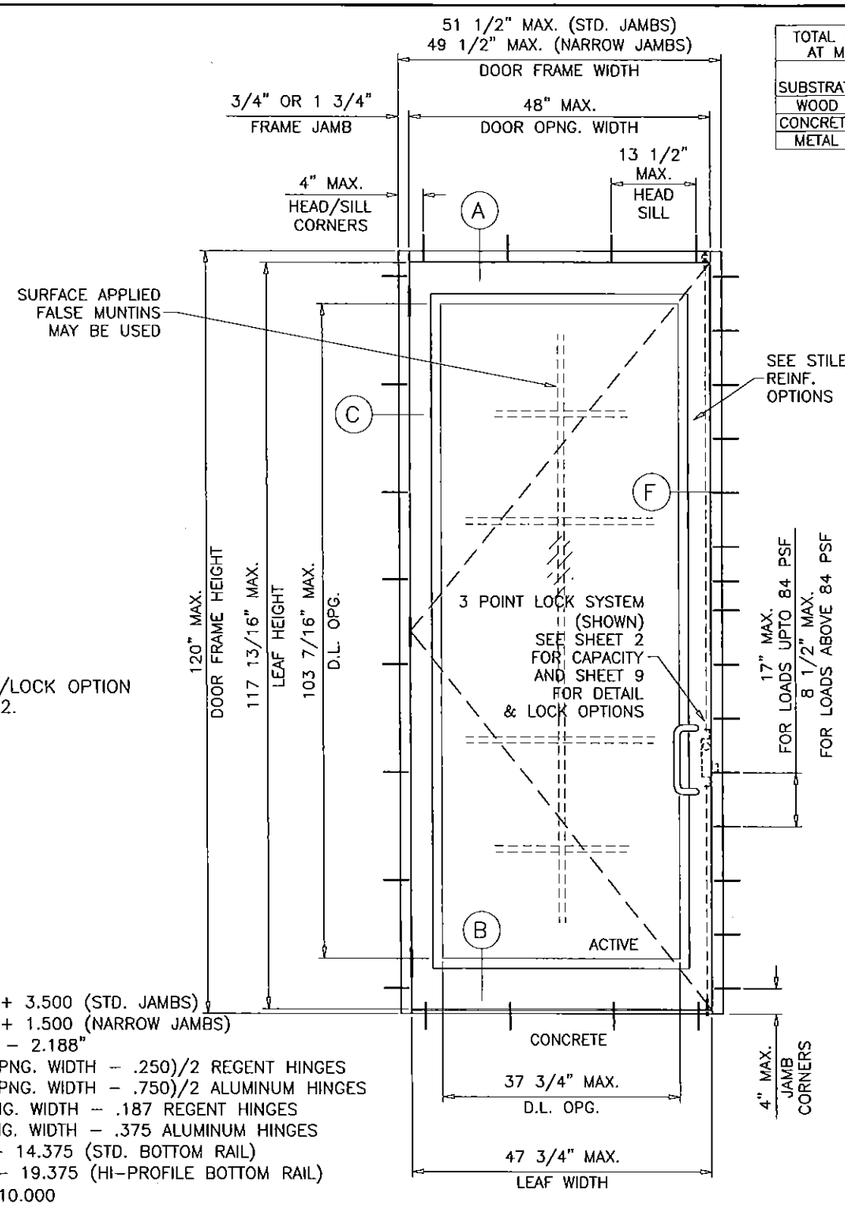

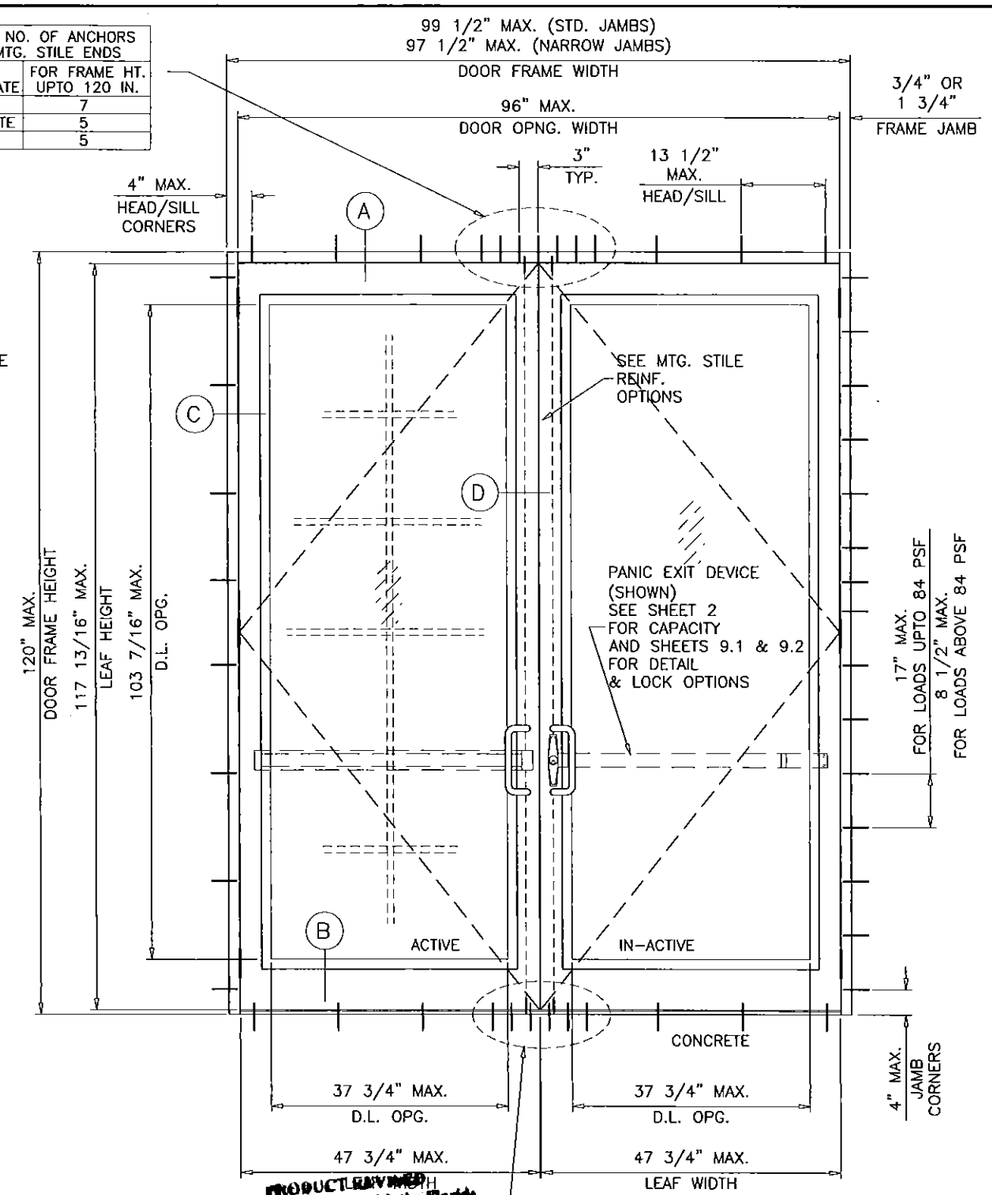

OBTAIN DOOR/GLASS/REINFORCING/LOCK OPTION CAPACITY FROM TABLE ON SHEET 2.

FRAME WIDTH = DOOR OPNG. WIDTH + 3.500 (STD. JAMBS)
= DOOR OPNG. WIDTH + 1.500 (NARROW JAMBS)
LEAF HEIGHT = DOOR FRAME HEIGHT – 2.188"
LEAF WIDTH (XX DOORS) = (DOOR OPNG. WIDTH – .250)/2 REGENT HINGES
= (DOOR OPNG. WIDTH – .750)/2 ALUMINUM HINGES
LEAF WIDTH (X DOORS) = DOOR OPNG. WIDTH – .187 REGENT HINGES
= DOOR OPNG. WIDTH – .375 ALUMINUM HINGES
GLASS DLO HEIGHT = LEAF HEIGHT – 14.375 (STD. BOTTOM RAIL)
= LEAF HEIGHT – 19.375 (HI-PROFILE BOTTOM RAIL)
GLASS DLO WIDTH = LEAF WIDTH – 10.000

THESE DOORS ARE RATED FOR LARGE & SMALL MISSILE IMPACT. SHUTTERS ARE NOT REQUIRED.

SERIES 'SUMMIT' ALUMINUM OUT-SWING DOOR

SINGLE (X) AND DOUBLE (XX) LEAF DOORS W/O TRANSOM SEE CHART ON SHEET 2 FOR DESIGN LOAD CAPACITY.

SINGLE (O/X) AND DOUBLE (O/XX) LEAF DOORS WITH TRANSOMS SEE SHEET 4 FOR HORIZONRTAL MULLION CAPACITY CHART LOWER VALUES FROM DOOR CAPACITY CHART OR HORIZONTAL MULLION (TRANSOM BAR) CAPACITY CHART WILL APPLY TO ENTIRE SYSTEM.

DOORS CAN ALSO BE USED WITH APPROVED ALDORA SMI-175 STOREFRONT SYSTEM (UNDER SEPARATE NOA).
FOR DOORS WITH STOREFRONT SYSTEM SEE SEPARATE NOA FOR DOOR MULLION CAPACITY AND ANCHORING REQUIREMENTS.
THE LOWEST VALUE RESULTING FROM DOOR CAPACITY OR TRANSOM CAPACITY OR STOREFRONT NOA WILL APPLY TO ENTIRE SYSTEM.

TYPICAL ELEVATIONS

NOTES:

THIS PRODUCT HAS BEEN DESIGNED AND TESTED TO COMPLY WITH THE REQUIREMENTS OF THE FLORIDA BUILDING CODE INCLUDING HIGH VELOCITY HURRICANE ZONE (HVHZ).

1BY OR 2BY WOOD BUCKS BY OTHERS, MUST BE ANCHORED PROPERLY TO TRANSFER LOADS TO THE STRUCTURE.

ANCHORS SHALL BE AS LISTED, SPACED AS SHOWN ON DETAILS, ANCHORS EMBEDMENT TO BASE MATERIAL SHALL BE BEYOND WALL DRESSING OR STUCCO.

ANCHORING OR LOADING CONDITIONS NOT SHOWN IN THESE DETAILS ARE NOT PART OF THIS APPROVAL.

A LOAD DURATION INCREASE IS USED IN DESIGN OF ANCHORS INTO WOOD ONLY.

MATERIALS INCLUDING BUT NOT LIMITED TO STEEL/METAL SCREWS, THAT COME INTO CONTACT WITH OTHER DISSIMILAR MATERIALS SHALL MEET THE REQUIREMENTS OF THE FLORIDA BLDG. CODE.

PRODUCT REVIEWED as complying with the Florida Building Code Acceptance No. 15-0106.04 Expiration Date JAN 14, 2018 By Ishwar L. Chauhan Miami Dade Product Control

Engr: JAVAD AHMAD
CIVIL
FLA. PE # 70592
C.A.N. 3538
JUN 25 2015

LAMINATED GLASS
LARGE MISSILE IMPACT

AL-FAROOQ CORPORATION
ENGINEERS & PRODUCT DEVELOPMENT
1235 S.W. 87 AVE
MIAMI, FLORIDA 33174
TEL. (305) 264-8100 FAX. (305) 262-6978

COMP-ANL\W12-46SM

SERIES 'SUMMIT' ALUM OUTSWING DOOR (L.M.I.)

Aldora Aluminum & Glass Products Inc.
11500 MIRAMAR PARKWAY SUITE 300
MIRAMAR, FL. 33025
TEL. (305) 888-6288 FAX. (305) 888-6289

revisions:			
no	date	by	description
A	12.04.12		REV. PER RER COMMENTS
B	08.12.13		MANUF. NAME REV.
C	12.15.14		UPDATED TO 2014 FBC
D	04.13.15		REV. PER RER COMMENTS

date: 08-09-12
scale: 1/2"=1'-0"
dr. by: HAMID
chk. by:

drawing no.
W12-46

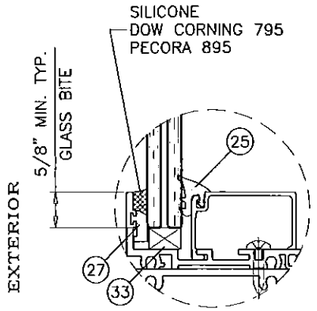

GLASS TYPES 'C', 'E' OR 'F'

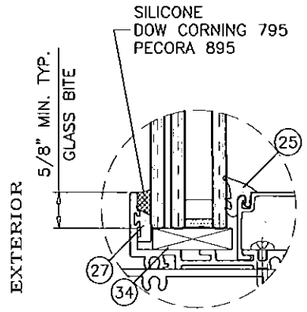

GLASS TYPE 'D' OR 'G'

GLAZING DETAIL TRANSOM

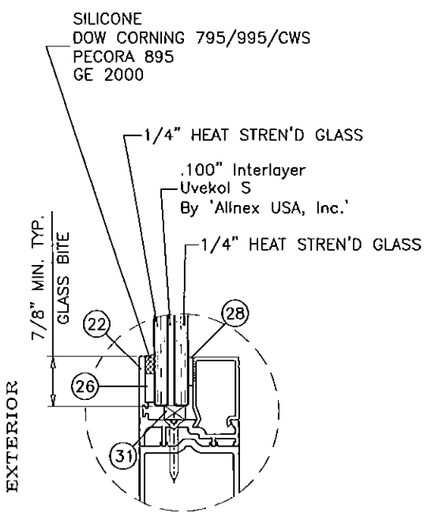

GLASS TYPE 'C'

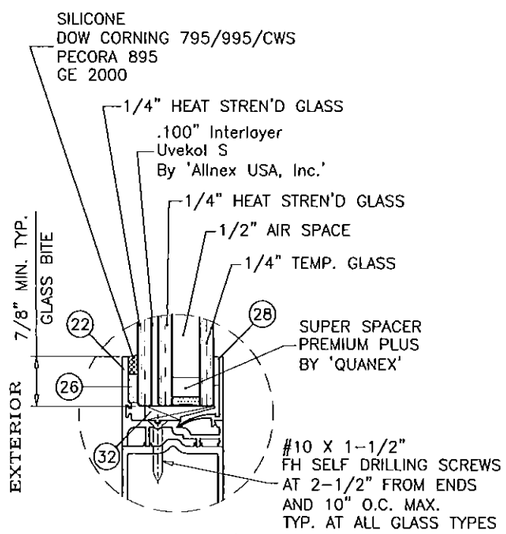

GLASS TYPE 'D'

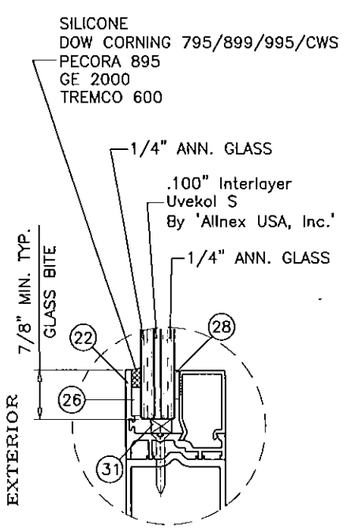

GLASS TYPE 'E'

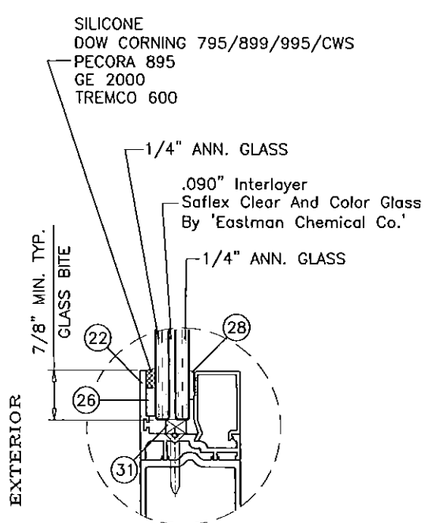

GLASS TYPE 'F'

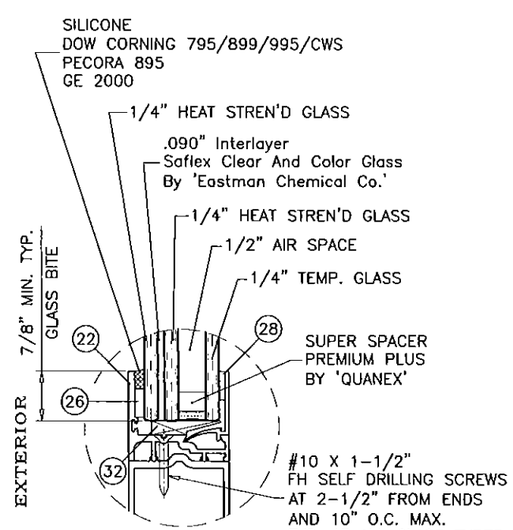

GLASS TYPE 'G'

GLAZING DETAILS DOOR LEAF

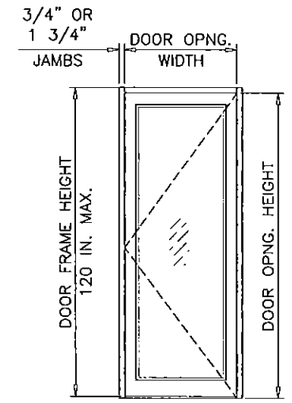

(X)

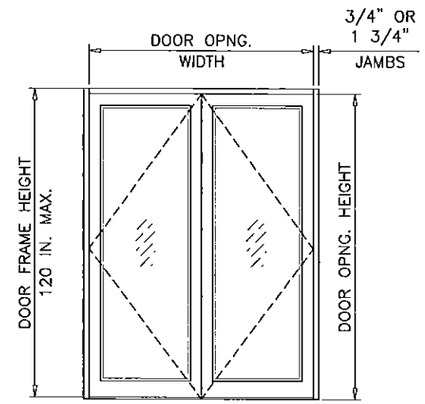

(XX)

DESIGN LOAD CAPACITY – PSF (GLASS)						
SINGLE (X)	DOUBLE (XX)		LOCK OPTIONS 1, 2, 3, 4 5, 6, 7 & 8		LOCK OPTIONS 1, 2, 3, 7 & 8	
			GLASS TYPES 'E', 'F' & 'G'		GLASS TYPES 'C' & 'D'	
DOOR OPNG. WIDTH INCHES	DOOR OPNG. WIDTH INCHES	FRAME HEIGHT INCHES	EXT. (+)	INT. (–)	EXT. (+)	INT. (–)
36	72	85–3/4	90.0	90.0	100.0	100.0
48	96		90.0	90.0	100.0	100.0
36	72	97–3/4	90.0	90.0	100.0	100.0
48	96		–	–	100.0	100.0
36	72	109–3/4	–	–	100.0	100.0
48	96		–	–	100.0	100.0
36	72	120	–	–	100.0	100.0
48	96		–	–	100.0	100.0
			UN–REINFORCED MTG. STILES		REINFORCED MTG. STILES	

NOTE: DOOR OPNG HEIGHT = DOOR FRAME HEIGHT –1 3/4"

PRODUCT REVIEWED
In compliance with the Florida Building Code
Acceptance No. 15-0106.04
Expiration Date 1/10/18
By [illegible]
Miami Dade Product Control

NOTE:
GLASS CAPACITIES ON THIS SHEET ARE BASED ON ASTM E1300–09 (3 SEC. GUSTS) AND FLORIDA BUILDING COMMISSION DECLARATORY STATEMENT DCA05–DEC–219

Engr: JAVAD AHMAD
CIVIL
FLA. PE # 70592
C.A.N. 3538
JUN 26 2015

AL-FAROOQ CORPORATION
ENGINEERS & PRODUCT DEVELOPMENT
1235 S.W. 87 AVE
MIAMI, FLORIDA 33174
TEL. (305) 264-8100 FAX. (305) 262-6978

COMP–ANL\W12–46SM

SERIES 'SUMMIT' ALUM OUTSWING DOOR (L.M.I.)

Aldora Aluminum & Glass Products Inc.
11500 MIRAMAR PARKWAY SUITE 300
MIRAMAR, FL. 33025
TEL. (305) 888–6288 FAX. (305) 888–6289

revisions:

no	date	by	description
A	12.04.12		REV. PER RER COMMENTS
B	08.12.13		MANUF. NAME REV.
C	12.15.14		UPDATED TO 2014 FBC
D	04.13.15		REV. PER RER COMMENTS

date: 08–09–12
scale: 1/2"=1'–0"
dr. by: HAMID
chk. by:

drawing no.
W12–46

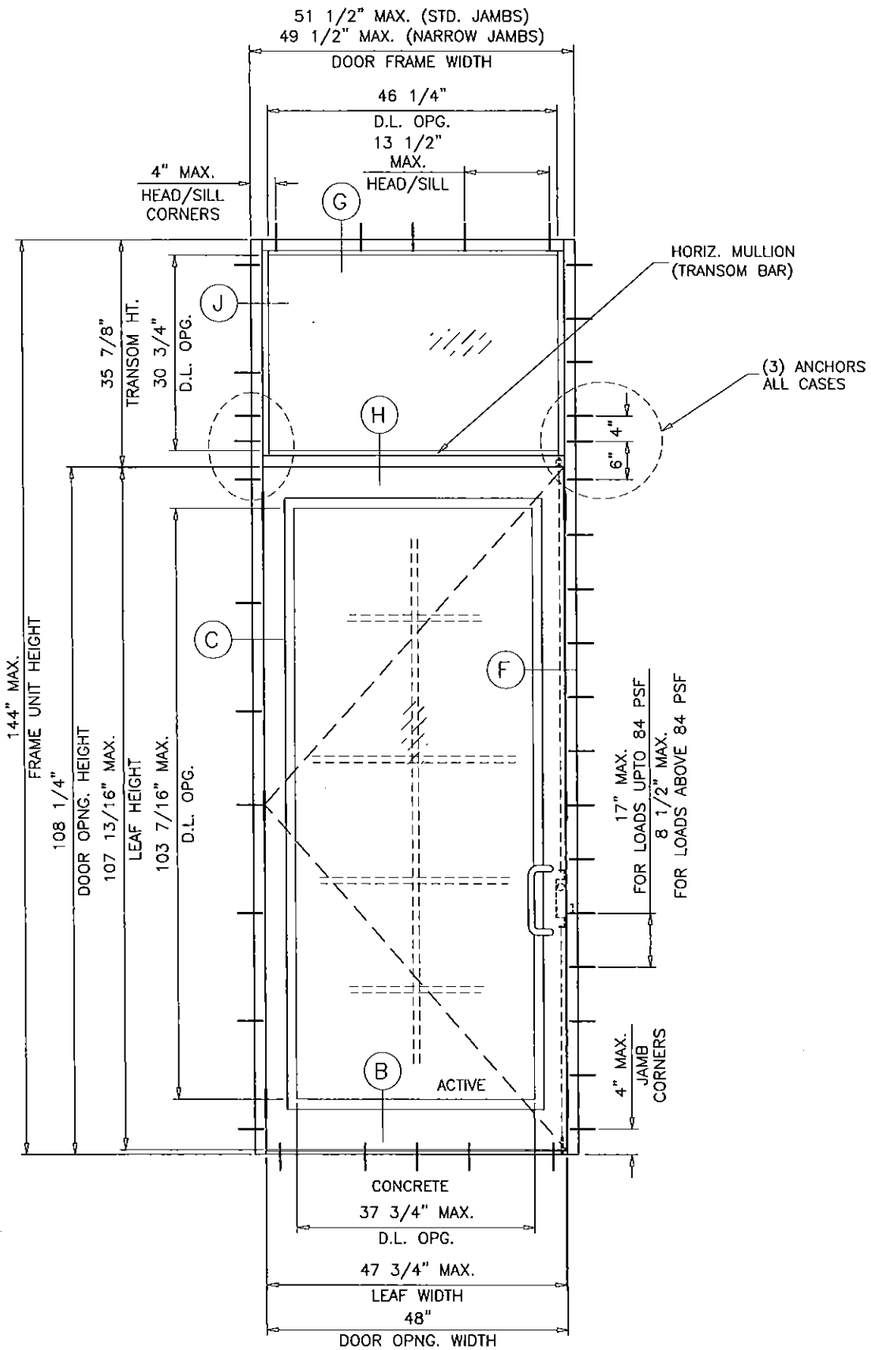

(O/X)

TYPICAL ELEVATION

DOOR W/ TRANSOM

DLO WIDTH (TRANSOM) = DOOR FRAME WIDTH – 5.25" (STD. JAMBS)
= DOOR FRAME WIDTH – 3.25" (NARROW JAMBS)
DLO HEIGHT (TRANSOM) = TRANSOM HEIGHT – 5.125"

NOTE:
FOR DOORS CAPACITY SEE SHEET 2.
FOR HORIZONTAL MULLION (TRANSOM BAR) CAPACITY SEE SHEET 4.
LOWER VALUES FROM DOORS OR HORIZONTAL MULLION (TRANSOM BAR) CHART WILL APPLY TO ENTIRE SYSTEM.

Engr: JAVAD AHMAD
CIVIL
FLA. PE # 70592
C.A.N. 3538

JUN 25 2015

PRODUCT REVIEWED
as complying with the Florida
Building Code
Acceptance No. 15-0106.04
Expiration Date 4/16/18
By
Miami Dade Product Control

AL-FAROOQ CORPORATION
ENGINEERS & PRODUCT DEVELOPMENT
1235 S.W. 87 AVE
MIAMI, FLORIDA 33174
TEL. (305) 264-8100 FAX. (305) 262-6978

COMP-ANL\W12-46SM

SERIES 'SUMMIT' ALUM OUTSWING DOOR (L.M.I.)

Aldora Aluminum & Glass Products Inc.
11500 MIRAMAR PARKWAY SUITE 300
MIRAMAR, FL. 33025
TEL. (305) 888-6288 FAX. (305) 888-6289

revisions:

no	date	by	description
A	12.04.12		REV. PER RER COMMENTS
B	08.12.13		MANUF. NAME REV.
C	12.15.14		NO CHANGE THIS SHEET
D	04.13.15		REV. PER RER COMMENTS

date: 08-09-12
scale: 3/8" = 1"
dr. by: HAMID
chk. by:

drawing no.
W12-46

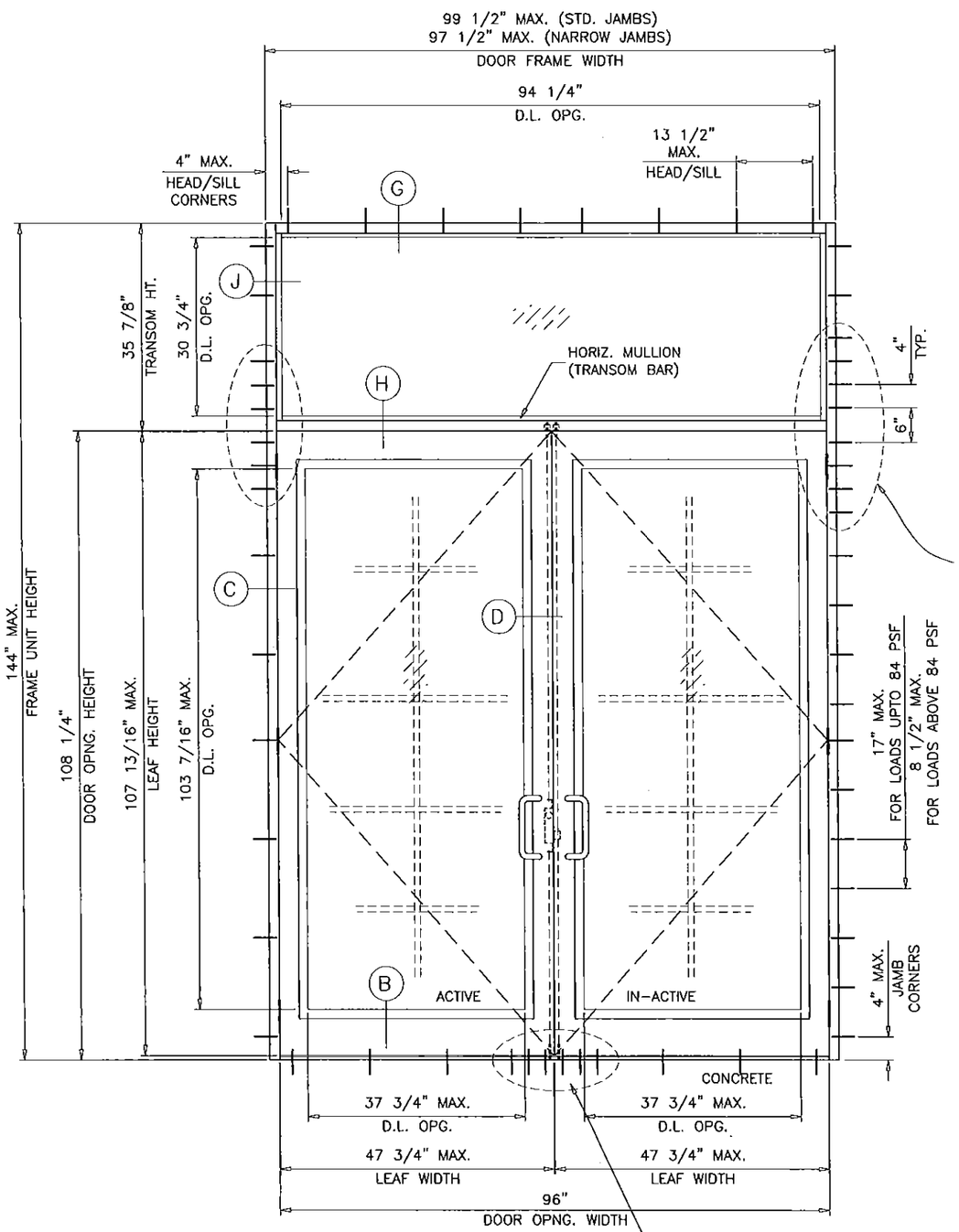

(O/XX)

TYPICAL ELEVATION

DOOR W/ TRANSOM

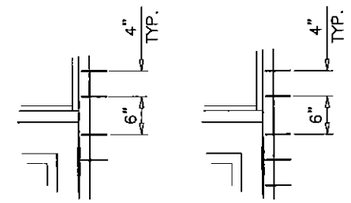

SUBSTRATE	NO. OF ANCHORS AT TRANSOM ENDS	
	WITHOUT REINF.	WITH REINF.
WOOD	5	6
MASONRY	5	8
CONCRETE	4	4
METAL	4	5

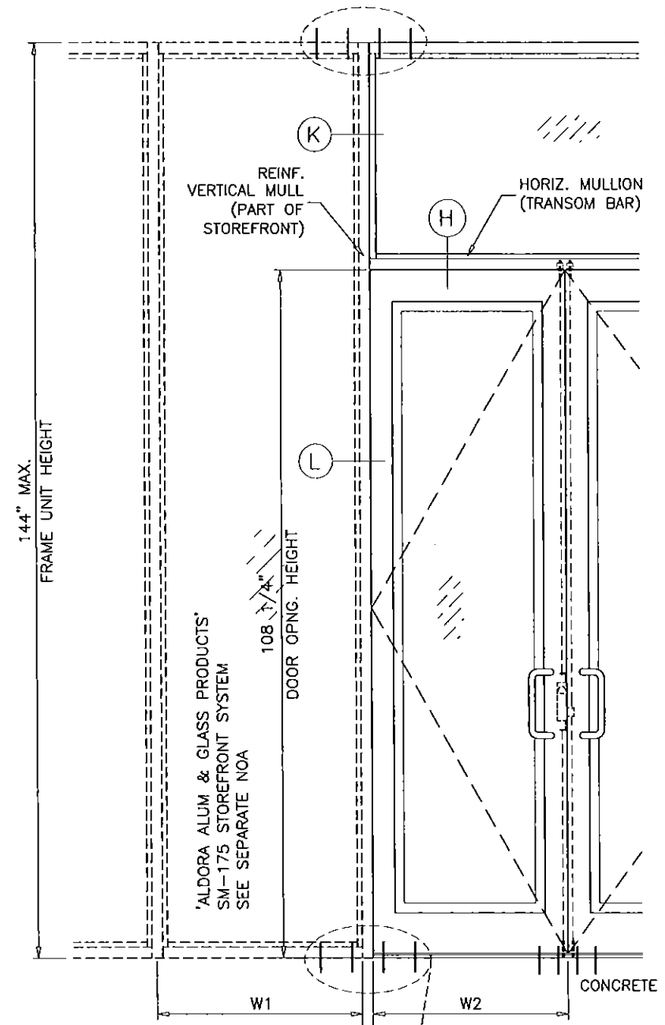

PRODUCT REVIEWED
as complying with the Florida
Building Code
Acceptance No. 15-0106.04
Expiration Date 1/10/18
by Miami Dade Product Control

VERT. MULLION TRIB. WIDTH (W) = $\frac{W1 + W2}{2} + 1.750$

DLO WIDTH (TRANSOM) = DOOR FRAME WIDTH − 5.25" (STD. JAMBS)
= DOOR FRAME WIDTH − 3.25" (NARROW JAMBS)
DLO HEIGHT (TRANSOM) = TRANSOM HEIGHT − 5.125"

Engr: JAVAD AHMAD
CIVIL
FLA. PE # 70592
C.A.N. 3538

JUN 2 2015

NOTE:
FOR DOORS CAPACITY SEE SHEET 2.
FOR HORIZONTAL MULLION (TRANSOM BAR) CAPACITY SEE SHEET 4.
LOWER VALUES FROM DOORS OR HORIZONTAL MULLION (TRANSOM BAR) CHART WILL APPLY TO ENTIRE SYSTEM.

AL-FAROOQ CORPORATION
ENGINEERS & PRODUCT DEVELOPMENT
1235 S.W. 87 AVE
MIAMI, FLORIDA 33174
TEL. (305) 264-8100 FAX. (305) 262-6978
COMP-ANL\W12-46SM

SERIES 'SUMMIT' ALUM OUTSWING DOOR (L.M.I.)

Aldora Aluminum & Glass Products Inc.
11500 MIRAMAR PARKWAY SUITE 300
MIRAMAR, FL. 33025
TEL. (305) 888-6288 FAX. (305) 888-6289

revisions:

no	date	by	description
A	12.04.12		REV. PER RER COMMENTS
B	08.12.13		MANUF. NAME REV.
C	12.15.14		NO CHANGE THIS SHEET
D	04.13.15		REV. PER RER COMMENTS

date: 08-09-12
scale: 3/8" = 1"
dr. by: HAMID
chk. by:

drawing no.
W12-46

SINGLE DOOR HORIZONTAL MULLION (TRANSOM BAR)

DESIGN LOAD CAPACITY

NOMINAL DIMS.			GLASS E, F, G WITHOUT REINF.	GLASS C, D WITH REINF.
OPNG. WIDTH INCHES	DOOR OPNG. HEIGHT INCHES	TRANSOM HEIGHT INCHES	EXT. (+) INT. (−)	EXT. (+) INT. (−)
36	84	20	90.0	100.0
		24	90.0	100.0
		26	–	100.0
		28	–	100.0
		32	–	100.0
		36	–	100.0
		40	–	100.0
		44	–	91.0
		48	–	83.7
42		20	–	100.0
		24	–	100.0
		26	–	100.0
		28	–	100.0
		32	–	100.0
		36	–	100.0
		40	–	100.0
		44	–	91.0
		48	–	83.7
48		20	–	100.0
		24	–	100.0
		26	–	100.0
		28	–	100.0
		32	–	100.0
		36	–	100.0
		40	–	100.0
36	96"	20	90.0	100.0
		24	90.0	100.0
		26	–	100.0
		28	–	100.0
		32	–	100.0
		36	–	100.0
		40	–	100.0
		44	–	91.0
		48	–	83.7
42		20	–	100.0
		24	–	100.0
		26	–	100.0
		28	–	100.0
		32	–	100.0
		36	–	100.0
		40	–	100.0
		44	–	91.0
		48	–	83.7
48		20	–	100.0
		24	–	100.0
		26	–	100.0
		28	–	100.0
		32	–	100.0
		36	–	100.0
		40	–	100.0
		42	–	95.7

SINGLE DOOR HORIZONTAL MULLION (TRANSOM BAR)

DESIGN LOAD CAPACITY

NOMINAL DIMS.			GLASS E, F, G WITHOUT REINF.	GLASS C, D WITH REINF.
OPNG. WIDTH INCHES	DOOR OPNG. HEIGHT INCHES	TRANSOM HEIGHT INCHES	EXT. (+) INT. (−)	EXT. (+) INT. (−)
36	108	20	–	100.0
		24	–	100.0
		26	–	100.0
		28	–	100.0
		32	–	100.0
		36	–	100.0
42		20	–	100.0
		24	–	100.0
		26	–	100.0
		28	–	100.0
		32	–	100.0
		36	–	100.0
48		20	–	100.0
		24	–	100.0
		26	–	100.0
		28	–	100.0
		32	–	97.7
		36	–	95.3
36	118	20	–	100.0
		24	–	100.0
		26	–	100.0
42		20	–	100.0
		24	–	100.0
		26	–	100.0
46		24	–	100.0
		26	–	100.0
48		20	–	98.5

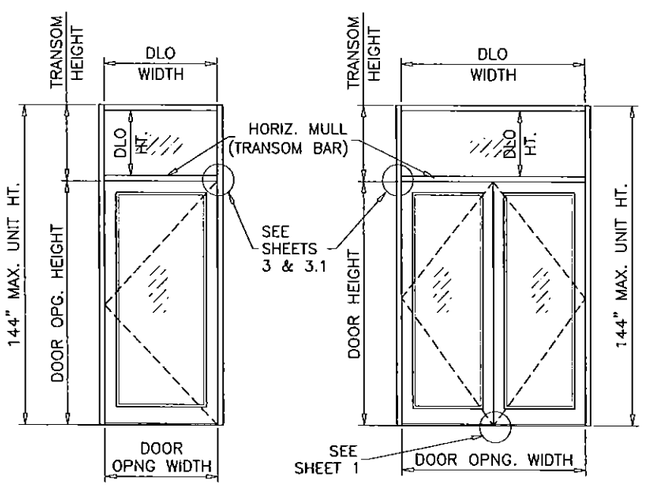

NOTE:
FOR DOORS CAPACITY SEE SHEET 2.
FOR HORIZONTAL MULLION (TRANSOM BAR) CAPACITY SEE CHART ABOVE.
LOWER VALUES FROM DOORS OR HORIZONTAL MULLION (TRANSOM BAR) CHART WILL APPLY TO ENTIRE SYSTEM.

DOUBLE DOOR HORIZONTAL MULLION (TRANSOM BAR)

DESIGN LOAD CAPACITY

NOMINAL DIMS.			GLASS E, F, G WITHOUT REINF.	GLASS C, D WITH REINF.
OPNG. WIDTH INCHES	DOOR OPNG. HEIGHT INCHES	TRANSOM HEIGHT INCHES	EXT. (+) INT. (−)	EXT. (+) INT. (−)
72	84	20	90.0	100.0
		24	90.0	100.0
		26	–	100.0
		28	–	100.0
		32	–	100.0
		36	–	100.0
		40	–	100.0
		44	–	91.0
		48	–	83.7
84		20	–	100.0
		24	–	100.0
		26	–	100.0
		28	–	100.0
		32	–	100.0
		36	–	100.0
		40	–	100.0
		44	–	91.0
		48	–	83.7
96		20	–	100.0
		24	–	100.0
		26	–	100.0
		28	–	100.0
		32	–	100.0
		36	–	100.0
		40	–	100.0
72	96"	20	90.0	100.0
		24	90.0	100.0
		26	–	100.0
		28	–	100.0
		32	–	100.0
		36	–	100.0
		40	–	100.0
		44	–	91.0
		48	–	83.7
84		20	–	100.0
		24	–	100.0
		26	–	100.0
		28	–	100.0
		32	–	100.0
		36	–	100.0
		40	–	100.0
		44	–	91.0
		48	–	83.7
96		20	–	100.0
		24	–	100.0
		26	–	100.0
		28	–	100.0
		32	–	100.0
		36	–	100.0
		40	–	100.0
		42	–	95.7

DOUBLE DOOR HORIZONTAL MULLION (TRANSOM BAR)

DESIGN LOAD CAPACITY

NOMINAL DIMS.			GLASS E, F, G WITHOUT REINF.	GLASS C, D WITH REINF.
OPNG. WIDTH INCHES	DOOR OPNG. HEIGHT INCHES	TRANSOM HEIGHT INCHES	EXT. (+) INT. (−)	EXT. (+) INT. (−)
72	108	20	–	100.0
		24	–	100.0
		26	–	100.0
		28	–	100.0
		32	–	100.0
		36	–	100.0
84		20	–	100.0
		24	–	100.0
		26	–	100.0
		28	–	100.0
		32	–	100.0
		36	–	100.0
96		20	–	100.0
		24	–	100.0
		26	–	100.0
		28	–	100.0
		32	–	97.7
		36	–	95.3
72	118	20	–	100.0
		24	–	100.0
		26	–	100.0
84		20	–	100.0
		24	–	100.0
		26	–	100.0
92		24	–	100.0
		26	–	100.0
96		20	–	98.5

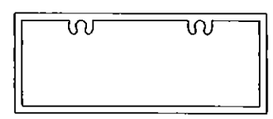

TRANSOM BAR
HORIZONTAL MULLION
WITHOUT REINFORCING

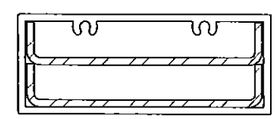

TRANSOM BAR
HORIZONTAL MULLION
WITH REINFORCING

PRODUCT REVIEWED
as complying with the Florida
Building Code
Acceptance No. 15-0166.04
Expiration Date 11/01/18
By [illegible]
Miami Dade Product Control

Engr: JAVAD AHMAD
CIVIL
FLA. PE # 70592
C.A.N. 3538
JUN 25 2015

AL-FAROOQ CORPORATION
ENGINEERS & PRODUCT DEVELOPMENT
1235 S.W. 87 AVE
MIAMI, FLORIDA 33174
TEL. (305) 264-8100 FAX. (305) 262-6978

COMP-ANL\W12-46SM

SERIES 'SUMMIT' ALUM OUTSWING DOOR (L.M.I.)

Aldora Aluminum & Glass Products Inc.
11500 MIRAMAR PARKWAY SUITE 300
MIRAMAR, FL. 33025
TEL. (305) 888-6288 FAX. (305) 888-6289

revisions:

no	date	by	description
A	12.04.12		REV. PER RER COMMENTS
B	08.12.13		MANUF. NAME REV.
C	12.15.14		NO CHANGE THIS SHEET
D	04.13.15		REV. PER RER COMMENTS

date: 08-09-12
scale: –
dr. by: HAMID
chk. by:

drawing no.
W12-46

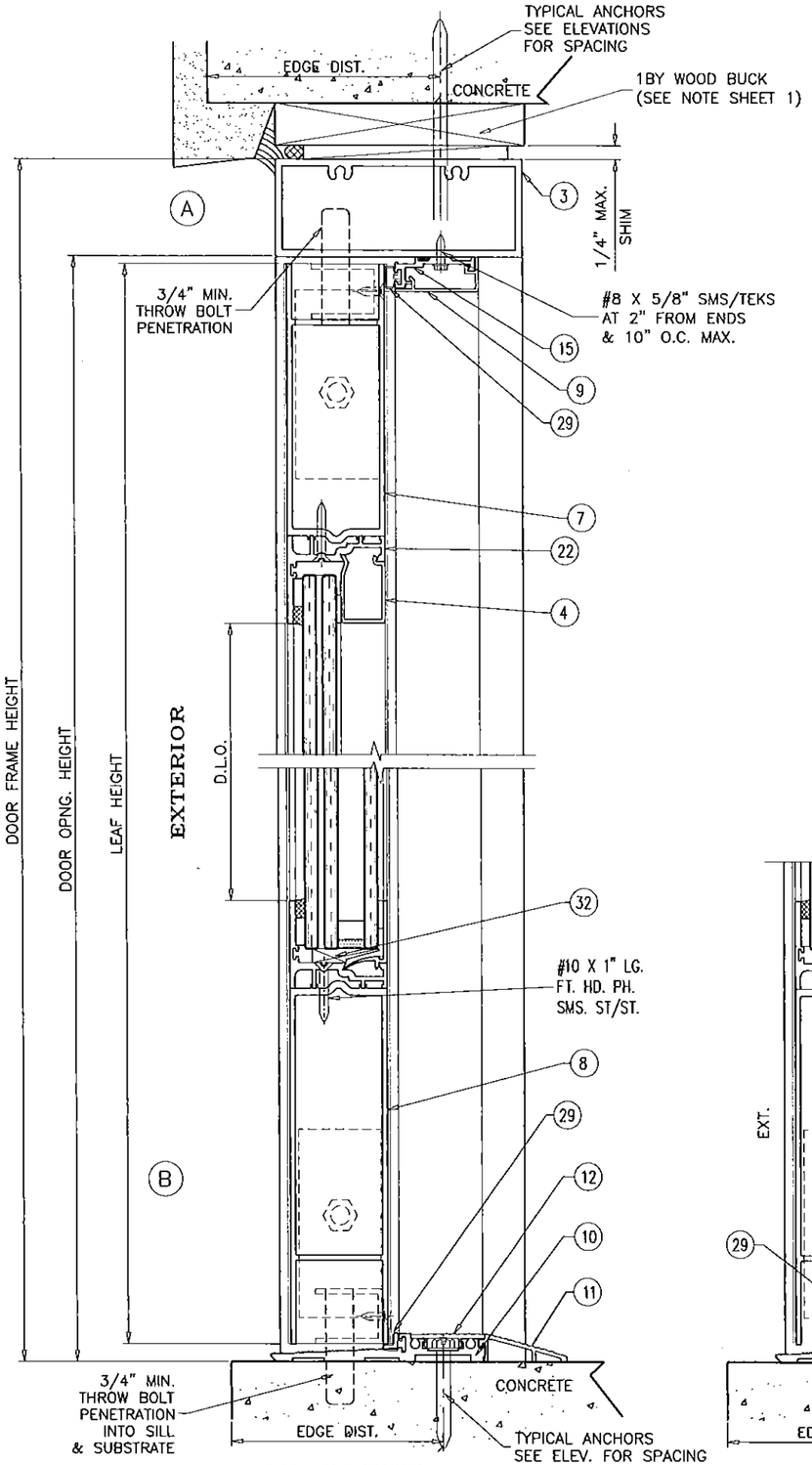

ADA THRESHOLD

NOT APPR'D FOR WATER INFILTRATION RESISTANCE

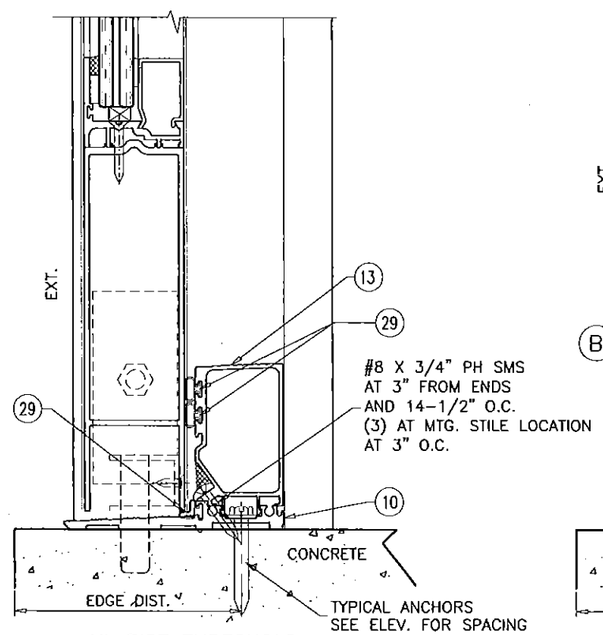

HI-RISE THRESHOLD

APPR'D FOR WATER INFILTRATION RESISTANCE

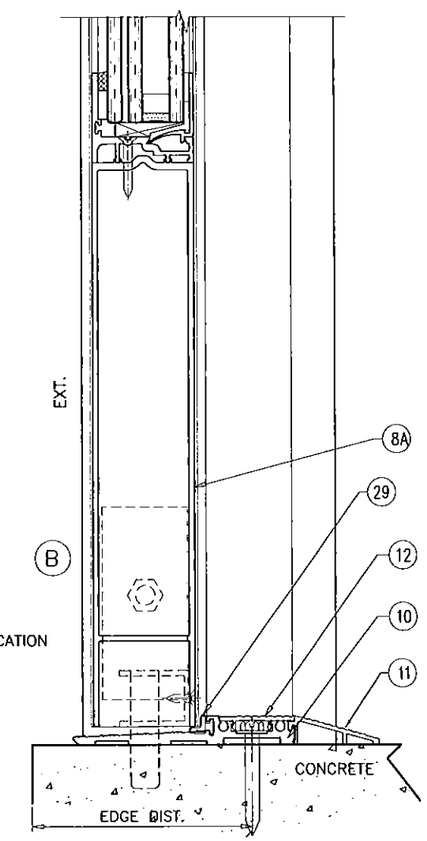

ADA THRESHOLD

NOT APPR'D FOR WATER INFILTRATION RESISTANCE

PRODUCT REVIEWED
as complying with the Florida
Building Code
Acceptance No. 15-0106.04
Expiration Date 1/10/18
By Ishwar I. Chand
Miami Dade Product Control

Engr: JAVAD AHMAD
CIVIL
FLA. PE # 70592
C.AAN. 3538

JUN 2 5 2015

AL-FAROOQ CORPORATION
ENGINEERS & PRODUCT DEVELOPMENT
1235 S.W. 87 AVE
MIAMI, FLORIDA 33174
TEL. (305) 264-8100 FAX. (305) 262-6978

COMP-ANL\W12-46SM

SERIES 'SUMMIT' ALUM OUTSWING DOOR (L.M.I.)

Aldora Aluminum & Glass Products Inc.
11500 MIRAMAR PARKWAY SUITE 300
MIRAMAR, FL. 33025
TEL. (305) 888-6288 FAX. (305) 888-6289

revisions:

no	date	by	description
A	12.04.12		REV. PER RER COMMENTS
B	08.12.13		MANUF. NAME REV.
C	12.15.14		NO CHANGE THIS SHEET
D	04.13.15		REV. PER RER COMMENTS

date: 08-09-12
scale: 3/8" = 1"
dr. by: HAMID
chk. by:

drawing no.
W12-46

sheet 5 of 13

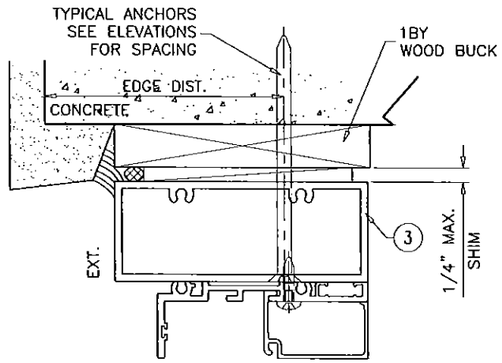

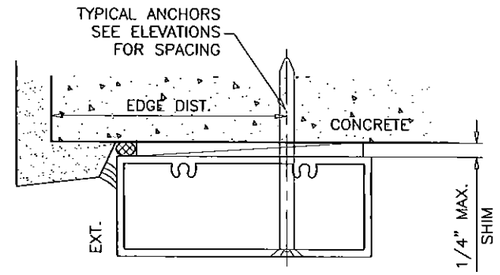

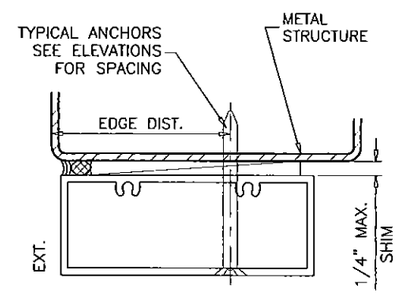

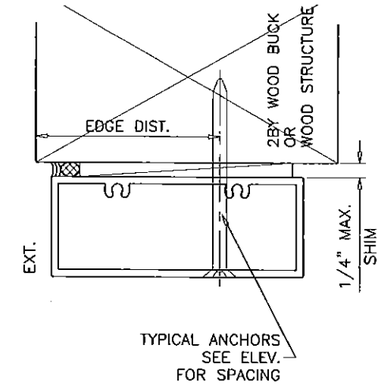

1BY OR 2BY WOOD BUCKS AND METAL STRUCTURE NOT BY 'ALDORA ALUMINUM AND GLASS PRODUCTS' MUST SUSTAIN LOADS IMPOSED BY GLAZING SYSTEM AND TRANSFER THEM TO THE BUILDING STRUCTURE.

TYPICAL ANCHORS: SEE ELEV. FOR SPACING

TYPE 'A'– 1/4" DIA. ULTRACON BY 'ELCO' (Fu=177 KSI, Fy=155 KSI)

INTO 2BY WOOD BUCKS OR WOOD STRUCTURES
1–1/2" MIN. PENETRATION INTO WOOD (HEAD/JAMBS)

THRU 1BY BUCKS INTO CONC. OR MASONRY.
1–1/2" MIN. EMBED INTO CONCRETE (HEAD/JAMBS)
1–3/8" MIN. EMBED INTO MASONRY (JAMBS)

DIRECTLY INTO MASONRY
1–1/4" MIN. EMBED INTO MASONRY (JAMBS)

TYPE 'B'– 1/4" DIA. ULTRACON BY 'ELCO' (Fu=177 KSI, Fy=155 KSI)

DIRECTLY INTO CONCRETE
1–1/2" MIN. EMBED INTO CONCRETE (HEAD/SILL)

TYPE 'C'– #14 SMS OR SELF DRILLING SCREWS (GRADE 2 CRS)

INTO MIAMI–DADE COUNTY APPROVED MULLIONS (MIN. THK.=1/8")

INTO METAL STRUCTURES
STEEL : 1/8" THK. MIN. (Fy = 36 KSI MIN.)
ALUMINUM : 1/8" THK. MIN. (6063–T5 MIN.)
(STEEL IN CONTACT WITH ALUMINUM TO BE PLATED OR PAINTED)

TYPICAL EDGE DISTANCE

INTO CONCRETE AND MASONRY = 2–1/2" MIN.
INTO WOOD STRUCTURE = 1" MIN.
INTO METAL STRUCTURE = 3/4" MIN.

TYPICAL CL TO CL DISTANCE

INTO CONCRETE AND MASONRY = 3" MIN.
INTO WOOD STRUCTURE = 1" MIN.
INTO METAL STRUCTURE = 1" MIN.

WOOD AT HEAD OR JAMBS SG = 0.55 MIN.
CONCRETE AT HEAD, SILL OR JAMBS f'c = 3000 PSI MIN.
C–90 HOLLOW/FILLED BLOCK AT JAMBS f'm = 2000 PSI MIN.

PRODUCT REVISED
as complying with the Florida
Buiding Code
Acceptance No. 15-0106.04
Expiration Date 7/10/18
By [illegible]
Miami Dade Product Control

Engr: JAVAD AHMAD
CIVIL
FLA. PE # 70592
C.A.N. 3538
JUN 2 2015

AL-FAROOQ CORPORATION
ENGINEERS & PRODUCT DEVELOPMENT
1235 S.W. 87 AVE
MIAMI, FLORIDA 33174
TEL. (305) 264-8100 FAX. (305) 262-5978

COMP–ANL\W12–46SM

SERIES 'SUMMIT' ALUM OUTSWING DOOR (L.M.I.)

Aldora Aluminum & Glass Products Inc.
11500 MIRAMAR PARKWAY SUITE 300
MIRAMAR, FL. 33025
TEL. (305) 888-6288 FAX. (305) 888-6289

revisions:

no	date	by	description
A	12.04.12		REV. PER RER COMMENTS
B	08.12.13		MANUF. NAME REV.
C	12.15.14		UPDATED TO 2014 FBC
D	04.13.15		REV. PER RER COMMENTS

date: 08–09–12
scale: 3/8" = 1"
dr. by: HAMID
chk. by:

drawing no.
W12–46

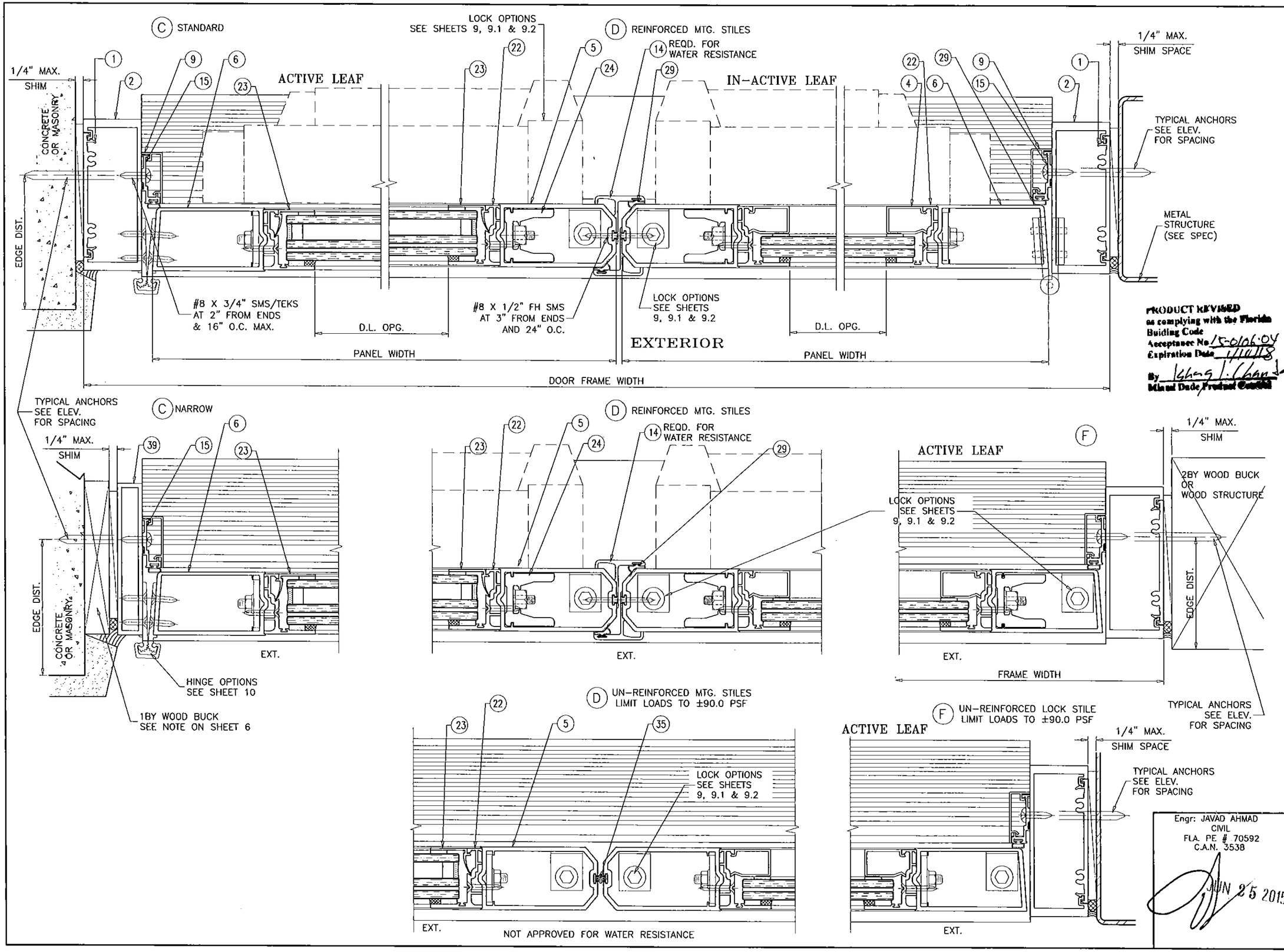

AL-FAROOQ CORPORATION
ENGINEERS & PRODUCT DEVELOPMENT
1235 S.W. 87 AVE
MIAMI, FLORIDA 33174
TEL. (305) 264-8100 FAX. (305) 262-6978

COMP-ANL\W12-46SM

SERIES 'SUMMIT' ALUM OUTSWING DOOR (L.M.I.)

Aldora Aluminum & Glass Products Inc.
11500 MIRAMAR PARKWAY SUITE 300
MIRAMAR, FL. 33025
TEL. (305) 888-6288 FAX. (305) 888-6289

revisions:

no	date	by	description
A	12.04.12		REV. PER RER COMMENTS
B	08.12.13		MANUF. NAME REV.
C	12.15.14		NO CHANGE THIS SHEET
D	04.13.15		REV. PER RER COMMENTS

date: 08-09-12
scale: 3/8" = 1"
dr. by: HAMID
chk. by:

drawing no.
W12-46

sheet 7 of 13

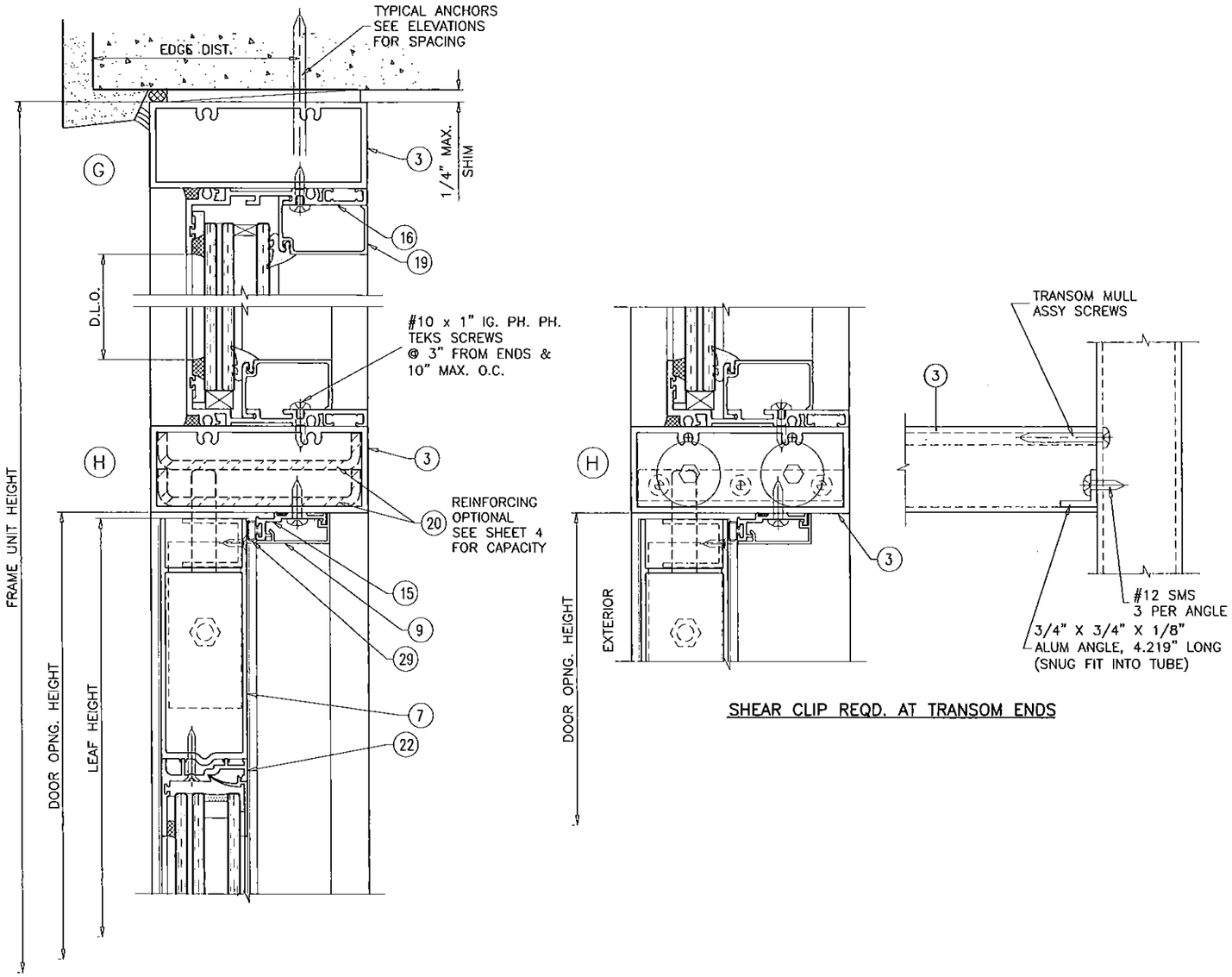

SHEAR CLIP REQD. AT TRANSOM ENDS

PRODUCT REVISED
as complying with the Florida
Building Code
Acceptance No. 15-0106.04
Expiration Date 1/10/18
By [signature]
Miami Dade Product Control

Engr: JAVAD AHMAD
CIVIL
FLA. PE # 70592
C.A.N. 3538

JUN 2[illegible] 2015

afc

AL-FAROOQ CORPORATION
ENGINEERS & PRODUCT DEVELOPMENT
1235 S.W. 87 AVE
MIAMI, FLORIDA 33174
TEL. (305) 264-8100 FAX. (305) 262-6978

COMP-ANL\W12-46SM

SERIES 'SUMMIT' ALUM OUTSWING DOOR (L.M.I.)

Aldora Aluminum & Glass Products Inc.
11500 MIRAMAR PARKWAY SUITE 300
MIRAMAR, FL. 33025
TEL. (305) 888-6288 FAX. (305) 888-6289

revisions:

no	date	by	description
A	12.04.12		REV. PER RER COMMENTS
B	08.12.13		MANUF. NAME REV.
C	12.15.14		NO CHANGE THIS SHEET
D	04.13.15		REV. PER RER COMMENTS

date: 08-09-12
scale: 3/8" = 1"
dr. by: HAMID
chk. by:

drawing no.
W12-46

sheet 8 of 13

LOCK OPTIONS:

OPTION #1:

STD. 3 POINT LOCK
MAX. FRAME HEIGHT = 120 IN.
MAX. LEAF WIDTH = 47-3/4 IN.
MAX. DESIGN LOAD = 100 PSF

ACTIVE LEAF:

THREE POINT LOCK SYSTEM SERIES 2222 BY 'REGENT HARDWARE'
KEY OPERATED FROM EXTERIOR AND THUMB TURN ON INTERIOR WITH CONCEALED FLUSH BOLTS AT TOP & BOTTOM OF LOCK STILE
LOCATED AT 34" FROM BOTTOM OF LEAF

INACTIVE LEAF:

MANUALLY OPERATED TWO POINT LOCK SYSTEM BY 'REGENT HARDWARE' WITH CONCEALED FLUSH BOLTS AT TOP & BOTTOM OF LOCK STILE
FASTENED WITH
(2) #8-32 X 1/4" PH MACHINE SCREWS

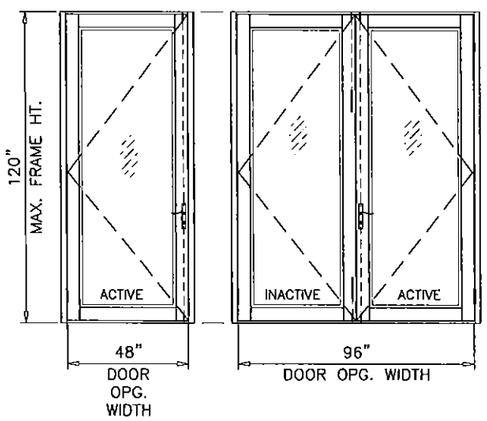

OPTION #2:

STD. 3 POINT LOCK
MAX. FRAME HEIGHT = 120 IN.
MAX. LEAF WIDTH = 47-3/4 IN.
MAX. DESIGN LOAD = 100 PSF

ACTIVE LEAF:

THREE POINT LOCK SYSTEM WITH 4 PLY HOOK LOCK REGENT NO. 206-3P,
KEY OPERATED ON EXTERIOR AND THUMB-TURN ON INTERIOR, LOCATED AT 36" FROM BOTTOM OF PANEL

INACTIVE LEAF:

TWO POINT LOCK SYSTEM SULLIVAN CH 103 WITH THUMB TURN ON THE INTERIOR, LOCATED AT 36" FROM BOTTOM OF PANEL

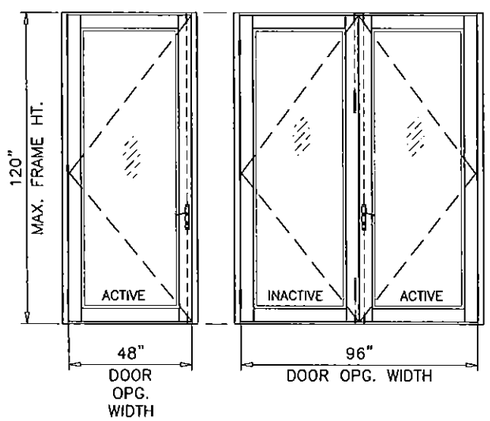

OPTION #3:

STD. 3 POINT LOCK
MAX. FRAME HEIGHT = 120 IN.
MAX. LEAF WIDTH = 47-3/4 IN.
MAX. DESIGN LOAD = 100 PSF

ACTIVE LEAF:

KEY OPERATED THREE POINT LOCK SYSTEM BY 'MDC' WITH CONCEALED FLUSH BOLTS AT TOP & BOTTOM OF LOCK STILE AND A THUMB TURN ON THE INTERIOR, LOCATED AT 36" FROM BOTTOM OF PANEL
FASTENED WITH
(2) #10-24 X 1/2" FH MS AND
(1) #10-32 X 1-3/4" FH MS

INACTIVE LEAF:

MANUALLY OPERATED TWO POINT LOCK SYSTEM BY 'MDC' WITH CONCEALED FLUSH BOLTS AT TOP & BOTTOM OF LOCK STILE
FASTENED WITH
(2) #6-32 X 1/2" PH MACHINE SCREWS

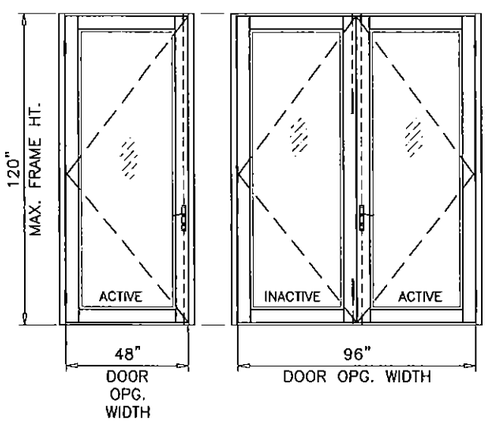

OPTION #4:

STD. 3 POINT LOCK
MAX. FRAME HEIGHT = 98 IN.
MAX. LEAF WIDTH = 36 IN.
MAX. DESIGN LOAD = 90 PSF

ACTIVE LEAF:

KEY OPERATED THREE POINT LOCK SYSTEM BY 'ADAMS RITE' WITH CONCEALED FLUSH BOLTS AT TOP & BOTTOM OF LOCK STILE AND A THUMB TURN ON THE INTERIOR, LOCATED AT 40" FROM BOTTOM OF PANEL
FASTENED WITH
(2) #12-24 X 1/2" FH MACHINE SCREWS

INACTIVE LEAF:

MANUALLY OPERATED TWO POINT LOCK SYSTEM BY 'ADAMS RITE' WITH CONCEALED FLUSH BOLTS AT TOP & BOTTOM OF LOCK STILE
FASTENED WITH
(2) #8-32 X 1/4" PH MACHINE SCREWS

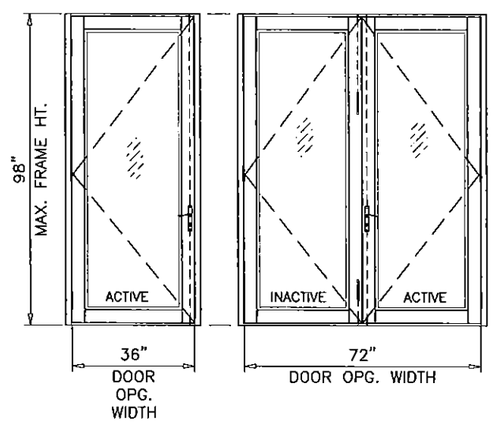

PRODUCT REVISED
as complying with the Florida
Buiding Code
Acceptance No 15-0106.04
Expiration Date 1/10/18
By
Miami Dade Product Control

Engr: JAVAD AHMAD
CIVIL
FLA. PE # 70592
C.A.N. 3938
JUN 2 2015

AL-FAROOQ CORPORATION
ENGINEERS & PRODUCT DEVELOPMENT
1235 S.W. 87 AVE
MIAMI, FLORIDA 33174
TEL (305) 264-8100 FAX. (305) 262-6978

COMP-ANL\W12-46SM

SERIES 'SUMMIT' ALUM OUTSWING DOOR (L.M.I.)

Aldora Aluminum & Glass Products Inc.
11500 MIRAMAR PARKWAY SUITE 300
MIRAMAR, FL. 33025
TEL. (305) 888-6288 FAX. (305) 888-6289

revisions:

no	date	by	description
A	12.04.12		REV. PER RER COMMENTS
B	08.12.13		MANUF. NAME REV.
C	12.15.14		NO CHANGE THIS SHEET
D	04.13.15		REV. PER RER COMMENTS

date: 08-09-12
scale: 3/8" = 1"
dr. by: HAMID
chk. by:

drawing no.
W12-46

LOCK OPTIONS:
PANIC EXIT DEVICE

OPTION #5:

PANIC EXIT DEVICE
MAX. FRAME HEIGHT = 98 IN.
MAX. LEAF WIDTH = 36 IN.
MAX. DESIGN LOAD = 90 PSF

PANIC EXIT DEVICE
MAX. FRAME HEIGHT = 85 3/4 IN.
MAX. LEAF WIDTH = 47-3/4 IN.
MAX. DESIGN LOAD = 90 PSF

ACTIVE & INACTIVE LEAF:

CONCEALED VERTICAL ROD PANIC EXIT DEVICE SERIES 3347
BY 'VON DUPRIN' LOCATED AT 40" FROM SILL
AT EACH LEAF.
FASTENED WITH
(2) #10-32 X 3/4" FH MACHINE SCREWS AT ONE END AND
(2) #10-24 X 1/2" FH MACHINE SCREWS AT OTHER END

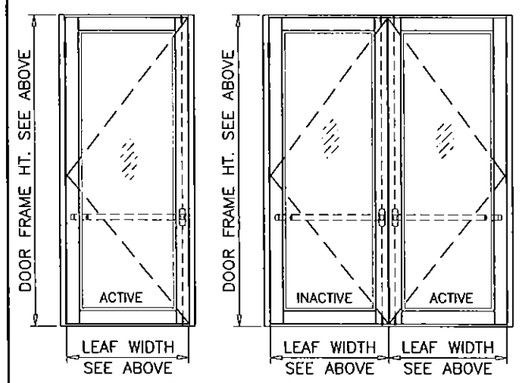

EXTERIOR ELEVS.

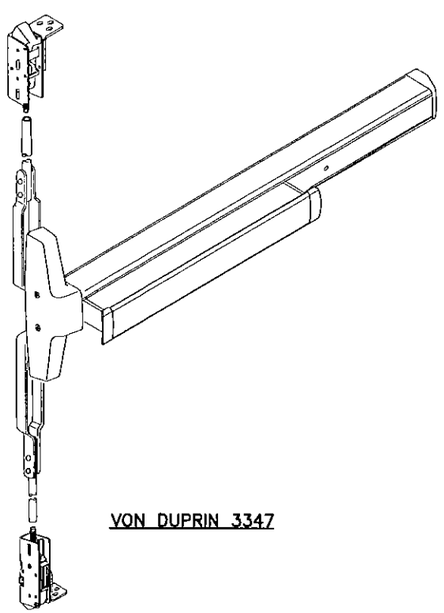
VON DUPRIN 3347

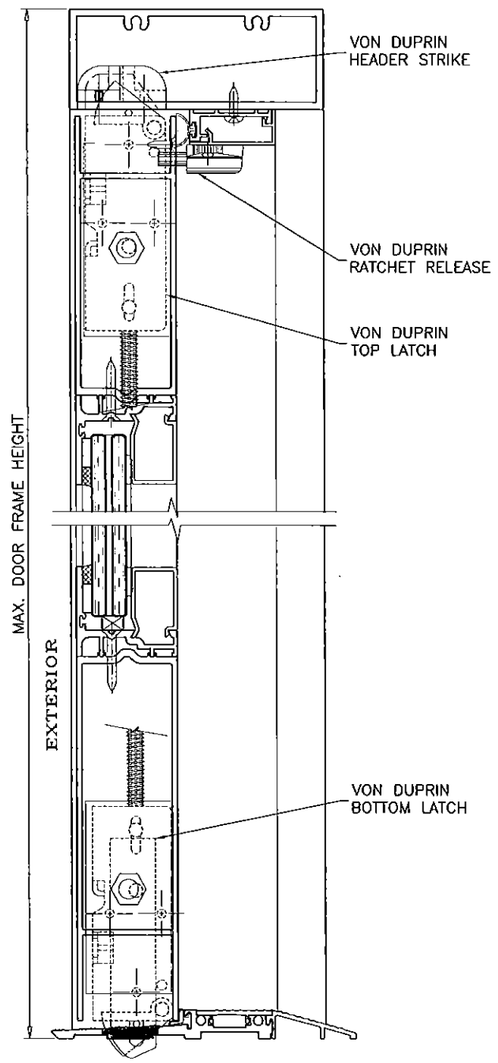

CONCRETE TO BE DRILLED OUT
FOR PANIC LATCHES AT SILL

PANIC EXIT DEVICE

OPTION #6:

PANIC EXIT DEVICE
MAX. FRAME HEIGHT = 98 IN.
MAX. LEAF WIDTH = 36 IN.
MAX. DESIGN LOAD = 90 PSF

PANIC EXIT DEVICE
MAX. FRAME HEIGHT = 85 3/4 IN.
MAX. LEAF WIDTH = 47-3/4 IN.
MAX. DESIGN LOAD = 90 PSF

ACTIVE & INACTIVE LEAF:

CONCEALED VERTICAL ROD PANIC EXIT DEVICE # 5770 BY
'REGENT HARDWARE' LOCATED AT 40"
FROM SILL AT EACH LEAF.
FASTENED WITH
(1) #10 X 3/8" FH SELF DRILLING SCREW AT ONE END AND
(2) #10 X 1/2" FH SELF DRILLING SCREWS AT OTHER END

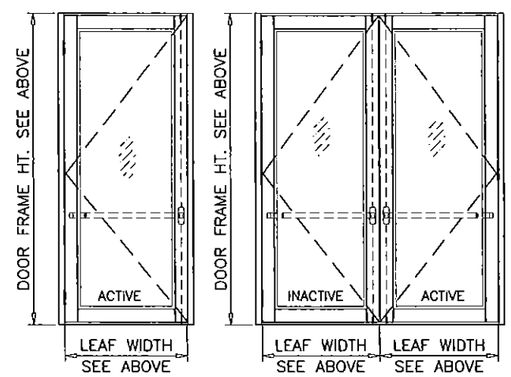

EXTERIOR ELEVS.

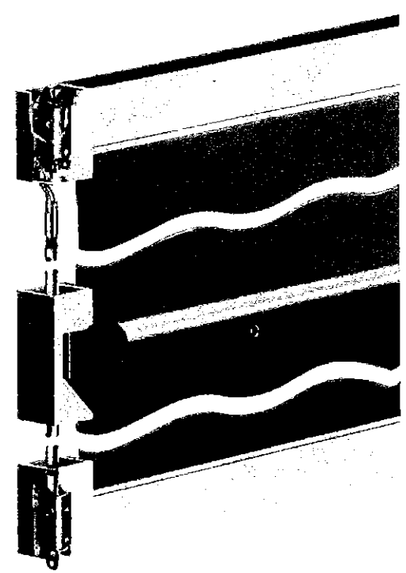
REGENT 5770

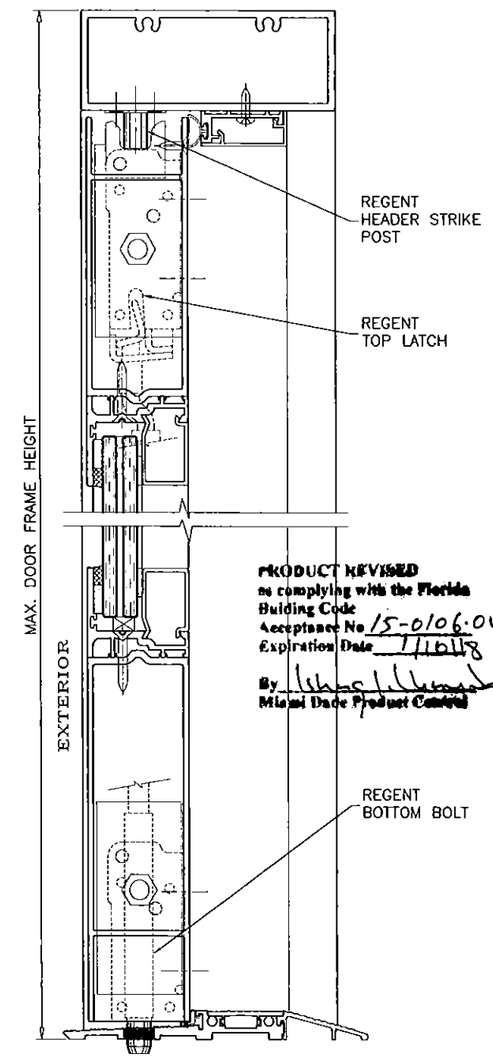

PRODUCT REVISED
to complying with the Florida
Building Code
Acceptance No 15-0106.04
Expiration Date 7/10/18
By
Miami Dade Product Control

Engr: JAVAD AHMAD
CIVIL
FLA. PE # 70592
C.A.N. 3538
JUN 25 2015

AL-FAROOQ CORPORATION
ENGINEERS & PROJECT DEVELOPMENT
1235 S.W. 87 AVE
MIAMI, FLORIDA 33174
TEL. (305) 264-8100 FAX. (305) 262-6978

COMP-ANL\W12-46SM

SERIES 'SUMMIT' ALUM OUTSWING DOOR (L.M.I.)

Aldora Aluminum & Glass Products Inc.
11500 MIRAMAR PARKWAY SUITE 300
MIRAMAR, FL. 33025
TEL. (305) 888-6288 FAX. (305) 888-6289

revisions:

no	date	by	description
A	12.04.12		REV. PER RER COMMENTS
B	08.12.13		MANUF. NAME REV.
C	12.15.14		NO CHANGE THIS SHEET
D	04.13.15		REV. PER RER COMMENTS

date: 08-09-12
scale: 3/8" = 1"
dr. by: HAMID
chk. by:

drawing no.
W12-46

LOCK OPTIONS:
PANIC EXIT DEVICE

OPTION #7:

PANIC EXIT DEVICE
MAX. FRAME HEIGHT = 120 IN.
MAX. LEAF WIDTH = 47-3/4 IN.
MAX. DESIGN LOAD = 100 PSF

ACTIVE & INACTIVE LEAF:

CONCEALED VERTICAL ROD PANIC EXIT DEVICE SERIES 8400 BY 'SARGENT ASSA ABLOY' LOCATED AT 40" FROM SILL AT EACH LEAF.
FASTENED WITH
(2) #12 X 1" HH SELF DRILLING SCREW AT ONE END AND
(2) #14 X 3/4" PH SELF DRILLING SCREWS AT OTHER END

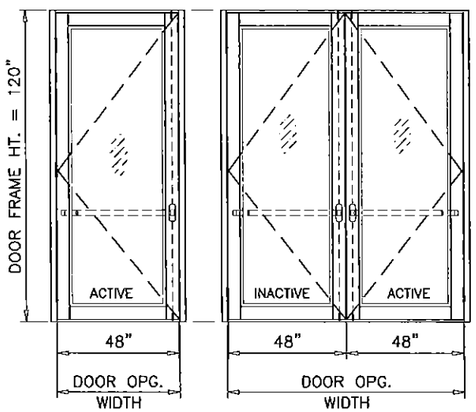

OPTION #8:

PANIC EXIT DEVICE
MAX. FRAME HEIGHT = 120 IN.
MAX. LEAF WIDTH = 47-3/4 IN.
MAX. DESIGN LOAD = 100 PSF

ACTIVE & INACTIVE LEAF:

CONCEALED VERTICAL ROD PANIC EXIT DEVICE # G86 BY 'ADAMS RITE' LOCATED AT 40" FROM SILL AT EACH LEAF.
FASTENED WITH
(2) #10-32 X 3/4" FH MACHINE SCREWS AT ONE END AND
(2) #10-24 X 1/2" FH MACHINE SCREWS AT OTHER END

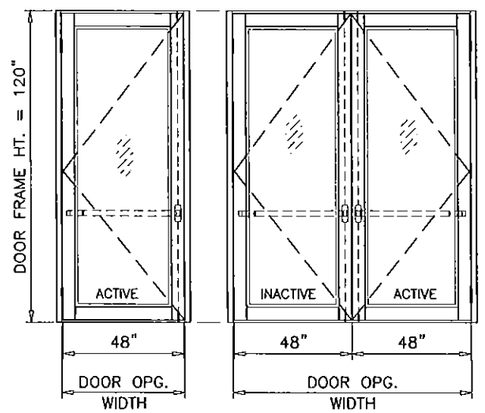

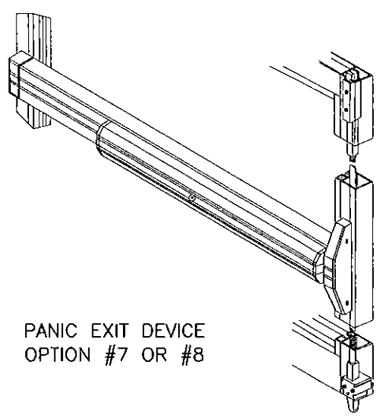

PANIC EXIT DEVICE
OPTION #7 OR #8

PRODUCT REVISED
to complying with the Florida
Buiding Code
Acceptance No. 15-0106.04
Expiration Date 1/10/18
By
Miami Dade Product Control

Engr: JAVAD AHMAD
CIVIL
FLA. PE # 70592
C.A.N. 3538

JUN 25 2015

AL-FAROOQ CORPORATION
ENGINEERS & PRODUCT DEVELOPMENT
1235 S.W. 87 AVE
MIAMI, FLORIDA 33174
TEL. (305) 264-8100 FAX. (305) 262-6978

COMP-ANL\W12-46SM

SERIES 'SUMMIT' ALUM OUTSWING DOOR (L.M.I.)

Aldora Aluminum & Glass Products Inc.
11500 MIRAMAR PARKWAY SUITE 300
MIRAMAR, FL. 33025
TEL. (305) 888-6288 FAX. (305) 888-6289

revisions:

no	date	by	description
A	12.04.12		REV. PER RER COMMENTS
B	08.12.13		MANUF. NAME REV.
C	12.15.14		NO CHANGE THIS SHEET
D	04.13.15		REV. PER RER COMMENTS

date: 08-09-12
scale: 3/8" = 1"
dr. by: HAMID
chk. by:

drawing no.
W12-46

DOOR FRAME NOT SHOWN FOR CLARITY

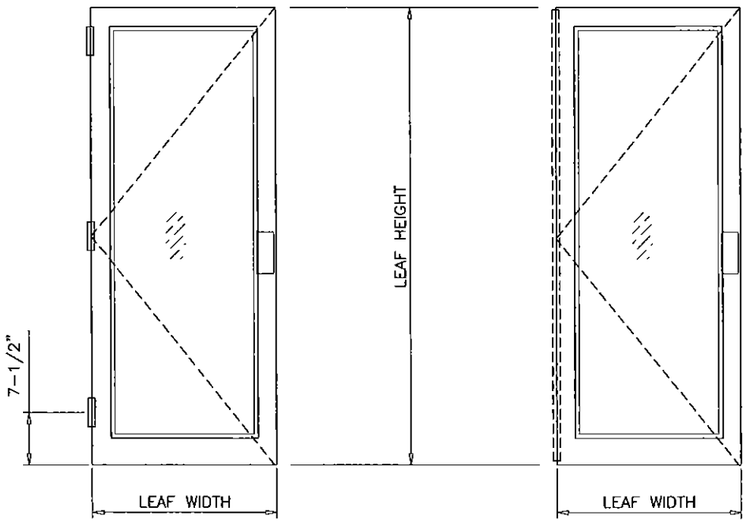

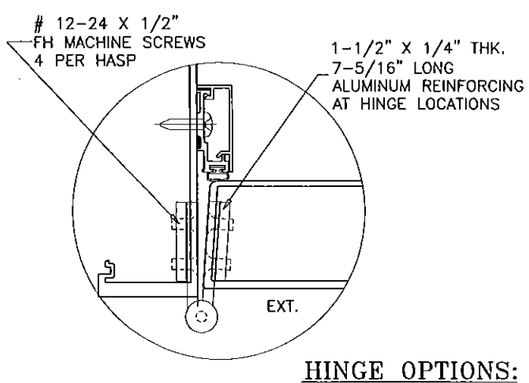

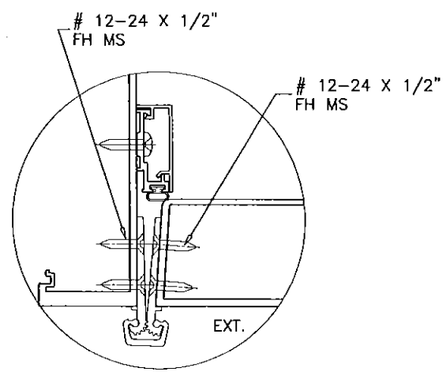

HINGE OPTIONS:

BUTT HINGES

4-1/2" LONG BUTT HINGES REGENT #4002
(3) PER LEAF, 7-1/2" FROM TOP AND BOTTOM
AND AT MIDSPAN
FASTENED TO FRAME JAMB WITH
(4) #12-24 X 1/2" FH MS
AND TO LEAF STILE WITH
(4) #12-24 X 1/2" FH MS

SURFACE MOUNT ROTON HINGE

CONTINUOUS ALUMINUM ROTTON HINGE
IVES DOOR 27G5, OR REMKO 76Y2F-3HR
FASTENED TO FRAME JAMB AND TO JAMB STILE
WITH (22) #12-24 X 1/2" FH MS SCREWS

PRODUCT REVIEWED
as complying with the Florida
Building Code
Acceptance No. 15-0106-04
Expiration Date 1/10/18
By [signature]
Miami Dade Product Control

Engr: JAVAD AHMAD
CIVIL
FLA. PE # 70592
C.A.N. 3538

JUN 25 2015

AL-FAROOQ CORPORATION
ENGINEERS & PRODUCT DEVELOPMENT
1235 S.W. 87 AVE
MIAMI, FLORIDA 33174
TEL. (305) 264-8100 FAX. (305) 262-6978

COMP-ANL\W12-46SM

SERIES 'SUMMIT' ALUM OUTSWING DOOR (L.M.I.)

Aldora Aluminum & Glass Products Inc.
11500 MIRAMAR PARKWAY SUITE 300
MIRAMAR, FL. 33025
TEL. (305) 888-6288 FAX. (305) 888-6289

revisions:

no	date	by	description
A	12.04.12		NO CHANGE THIS SHEET
B	08.12.13		MANUF. NAME REV.
C	12.15.14		NO CHANGE THIS SHEET
D	04.13.15		REV. PER RER COMMENTS

date: 08-09-12
scale: 3/8" = 1"
dr. by: HAMID
chk. by:

drawing no.
W12-46

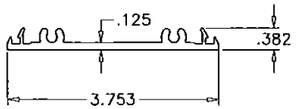

(1) SMI-004
PLAIN SNAP

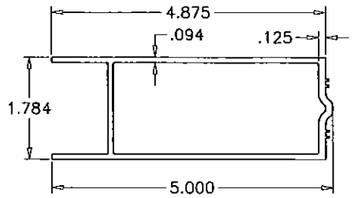

(7) SMI-012
TOP RAIL

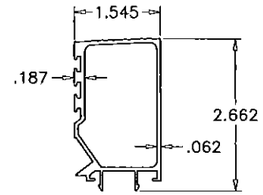

(13) SMI-039
HI RISE THRESHOLD COVER

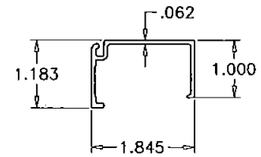

(19) SMI-092
GLASS STOP.

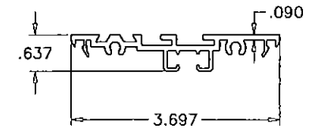

(21) SMI-094
PLAIN SNAP.

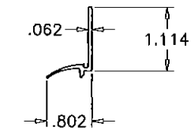

(23) SMI-097
DOOR SASH STOP

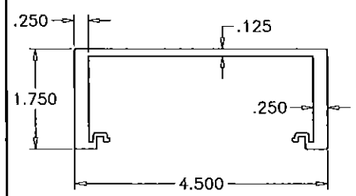

(2) SMI-005
FRAME JAMB

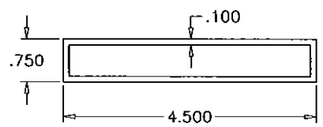

(39) SMI-043
FRAME JAMB

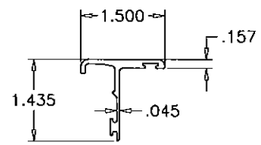

(14) SMI-058
ASTRAGAL

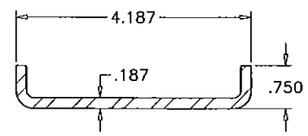

(20) REINFORCING CHANNEL
A36 STEEL

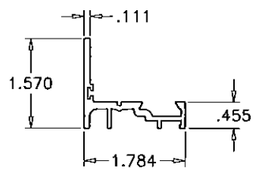

(22) SMI-096
DOOR SASH BASE

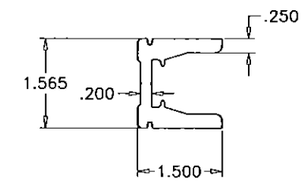

(24) SMI-051
DOOR STILE REINF.

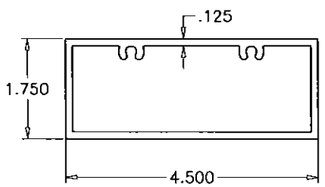

(3) SMI-006
FRAME HEAD/TRANSOM BAR

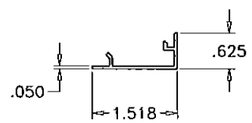

(9) SMI-015
DOOR STOP COVER

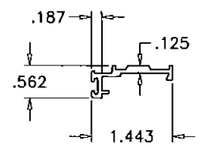

(15) SMI-044
DOOR STOP BASE

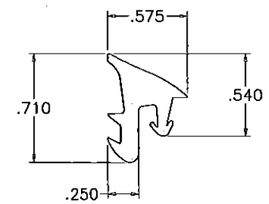

HARDNESS = 72±5 SHORE A
TENSILE STRENGTH (100% STRAIN)= 1200 PSI
TENSILE STRENGTH (BREAK)= 1450 PSI
ELONGATION AT BREAK = 300%
TEAR STRENGTH = 150 LBF/IN
SPECIFIC GRAVITY = 1.20

(25) TRANSOM EPDM GASKET
SCALE 1:1

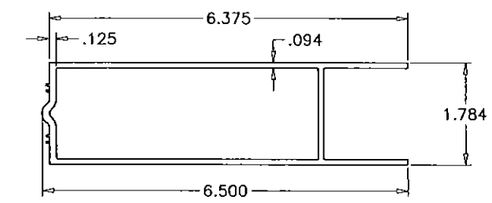

(8) SMI-013
STD. BOTTOM RAIL

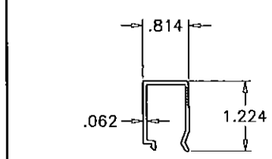

(4) SMI-008
DOOR SASH STOP

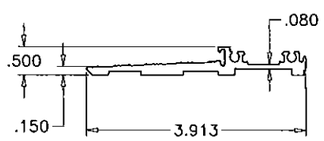

(10) SMI-036
THRESHOLD BASE

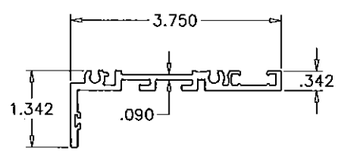

(16) SMI-PW001
TRANSOM ADAPTER

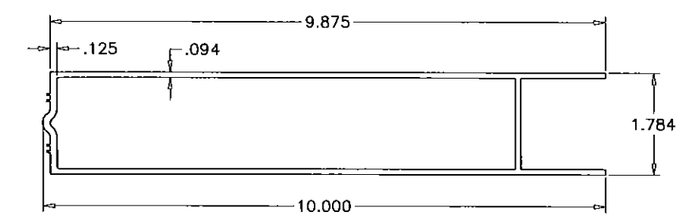

(8A) SMI-065
HI-PROFILE BOTTOM RAIL

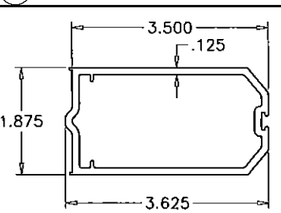

(5) SMI-009
ACTIVE STILE

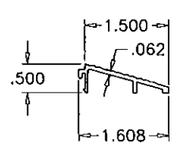

(11) SMI-037
THRESHOLD RAMP ADAPTER

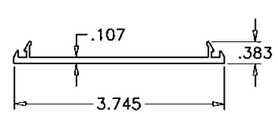

(17) SMI-090001
PLAIN SNAP

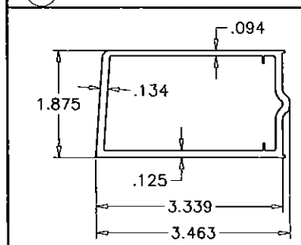

(6) SMI-011
HINGE STILE

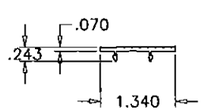

(12) SMI-038
ADA THRESHOLD COVER

PRODUCT REVIEWED
as complying with the Florida
Building Code
Acceptance No. 15-0106.04
Expiration Date 1/10/18
By Sheng L. Chang
Miami Dade Product Control

Engr: JAVAD AHMAD
CIVIL
FLA. PE # 70592
C.A.N. 3538
JUN 2 5 2015

AL-FAROOQ CORPORATION
ENGINEERS & PRODUCT DEVELOPMENT
1235 S.W. 87 AVE
MIAMI, FLORIDA 33174
TEL. (305) 264-8100 FAX. (305) 262-6978

COMP-ANL\W12-46SM

SERIES 'SUMMIT' ALUM OUTSWING DOOR (L.M.I.)

Aldora Aluminum & Glass Products Inc.
11500 MIRAMAR PARKWAY SUITE 300
MIRAMAR, FL. 33025
TEL. (305) 888-6288 FAX. (305) 888-6289

revisions:

no	date	by	description
A	12.04.12		REV. PER RER COMMENTS
B	08.12.13		MANUF. NAME REV.
C	12.15.14		NO CHANGE THIS SHEET
D	04.13.15		NO CHANGE THIS SHEET

date: 08-09-12
scale: 3/8" = 1"
dr. by: HAMID
chk. by:

drawing no.
W12-46

ITEM #	PART #	REQ'D	DESCRIPTION	MATERIAL	MANF./SUPPLIER/REMARKS
1	SMI-004	AS REQ'D	PLAIN SNAP	6063-T6	–
2	SMI-005	AS REQ'D	FRAME JAMB	6063-T6	–
3	SMI-006	AS REQ'D	FRAME HEAD/TRANSOM BAR	6063-T6	–
4	SMI-008	AS REQ'D	DOOR SASH STOP	6063-T6	–
5	SMI-009	AS REQ'D	ACTIVE / INACTIVE STILE	6063-T6	–
6	SMI-011	AS REQ'D	HINGE STILE	6063-T6	–
7	SMI-012	AS REQ'D	TOP RAIL	6063-T6	–
8	SMI-013	AS REQ'D	BOTTOM RAIL (STD.)	6063-T6	–
8A	SMI-065	AS REQ'D	BOTTOM RAIL (HI-RISE)	6063-T6	–
9	SMI-015	AS REQ'D	DOOR STOP COVER	6063-T6	–
10	SMI-036	AS REQ'D	THRESHOLD BASE	6063-T6	–
11	SMI-037	AS REQ'D	THRESHOLD RAMP ADAPTOR	6063-T6	–
12	SMI-038	AS REQ'D	ADA THRESHOLD COVER	6063-T6	–
13	SMI-039	AS REQ'D	HI-RISE THRESHOLD COVER	6063-T6	–
14	SMI-058	AS REQ'D	ASTRAGAL	6063-T6	–
15	SMI-044	AS REQ'D	DOOR STOP BASE	6063-T6	–
16	SMI-PW001	AS REQ'D	TRANSOM ADAPTER	6063-T6	–
17	SMI-090001	AS REQ'D	PLAIN SNAP	6063-T6	–
19	SMI-092	AS REQ'D	GLASS STOP	6063-T6	–
20	–	AS REQD.	REINFORCING CHANNEL (TRANSOM)	A36 STEEL	–
21	SMI-094	AS REQ'D	PLAIN SNAP	6063-T6	–
22	SMI-096	AS REQ'D	DOOR SASH BASE	6063-T6	–
23	SMI-097	AS REQ'D	DOOR SASH STOP	6063-T6	–
24	SMI-051	AS REQ'D	DOOR STILE ALUM. REINF. FULL LENGTH	6005-T5	–
25	SMI-G01	AS REQ'D	TRANSOM GASKET (@ INTERIOR)	EPDM	TREMCO
26	SMI-G12	AS REQ'D	DOUBLE FACE FOAM TAPE (3/16" X 1/2")	VINYL FOAM	FRANK LOWE
27	SMI-G07	AS REQ'D	GASKET (@ EXTERIOR)	SANTOPRENE	CENTRAL PLASTICS, INC.
28	SMI-G11	AS REQ'D	SINGLE FACE FOAM TAPE (1/8" X 1/2")	VINYL FOAM	FRANK LOWE
29	SMI-B01	AS REQ'D	.385 DIA. BULB	RIGID PVC	CENTRAL PLASTICS, INC.
30	SMI-B03	AS REQ'D	PUSH-IN, DOOR PERIMETER SEALING.	RIGID PVC	CENTRAL PLASTICS, INC.
31	SMI-SB03	2 PER GL.	SETTING BLOCKS (1/4" X 3/8" X 4" LG.) AT 1/4 POINTS	EPDM	TREMCO, DUROMETER 80±5 SHORE A
32	SMI-SB05	2 PER GL.	SETTING BLOCKS (1/4" X 1 3/16" X 4" LG.) AT 1/4 POINTS	EPDM	TREMCO, DUROMETER 80±5 SHORE A
33	SMI-SB06	2 PER GL.	SETTING BLOCKS (3/8" X 5/8" X 4" LG.) AT 1/4 POINTS	EPDM	TREMCO, DUROMETER 80±5 SHORE A
34	SMI-SB04	AS REQ'D	SETTING BLOCK (3/8" X 1 1/4" X 4" LG.) AT 1/4 POINTS	EPDM	TREMCO, DUROMETER 80±5 SHORE A
35	SMI-W01	AS REQ'D	WOOL PILE	PILE	ULTRAFAB
36	SMI-P06	AS REQ'D	LEAF SEAL	PLASTIC	ULTRAFAB (E224)
37	–	2/ LEAF	3/8" THREADED ROD WITH NUT	STEEL	–
38	–	2/ LEAF	SUPPORT PLATE (1-1/2" X 3-3/8" X 3/16")	ALUMINUM	–
39	SMI-043	AS REQ'D	FRAME JAMB	6063-T6	–
43	#12 X 1 1/2"	4/CORNER	FRAME ASSEMBLY SCREWS	ST. STEEL	HEX. HEAD MACHINE SCREW

PRODUCT REVIEWED
as complying with the Florida
Building Code
Acceptance No. 15-0106.04
Expiration Date 1/10/18
By Ishaq I. Chanda
Miami Dade Product Control

Engr: JAVAD AHMAD
CIVIL
FLA. PE # 70592
C.A.N. 3538

JUN 25 2015

SEALANTS:

ALL FRAME AND LEAF CORNERS AND INSTALLATION SCREWS SEALED WITH SILICONE.

AL-FAROOQ CORPORATION
ENGINEERS & PRODUCT DEVELOPMENT
1235 S.W. 87 AVE
MIAMI, FLORIDA 33174
TEL. (305) 264-8100 FAX. (305) 262-6978

COMP-ANL\W12-46SM

SERIES 'SUMMIT' ALUM OUTSWING DOOR (L.M.I.)

Aldora Aluminum & Glass Products Inc.
11500 MIRAMAR PARKWAY SUITE 300
MIRAMAR, FL. 33025
TEL. (305) 888-6288 FAX. (305) 888-6289

revisions:

no	date	by	description
A	12.04.12		REV. PER RER COMMENTS
B	08.12.13		MANUF. NAME REV.
C	12.15.14		UPDATED TO 2014 FBC
D	04.13.15		NO CHANGE THIS SHEET

date: 08-09-12
scale: 3/8" = 1"
dr. by: HAMID
chk. by:

drawing no.
W12-46

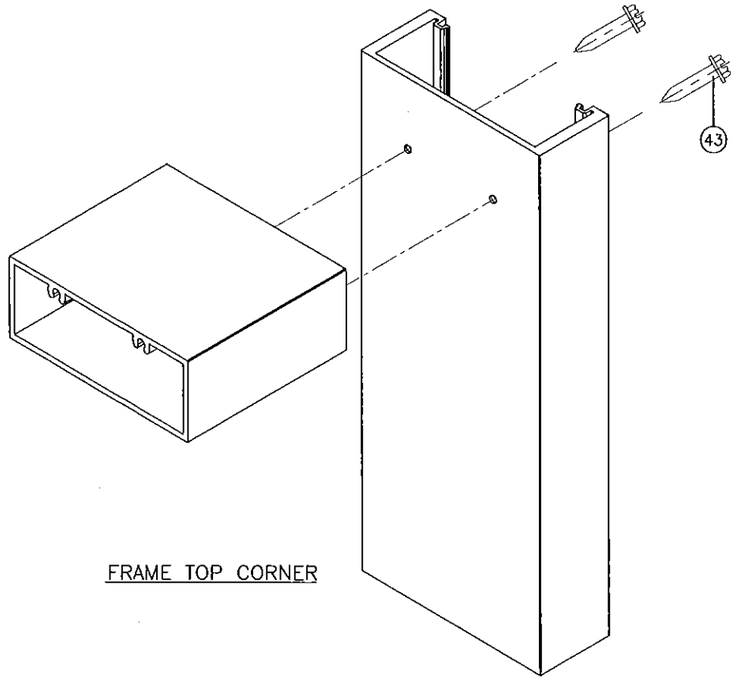

FRAME TOP CORNER

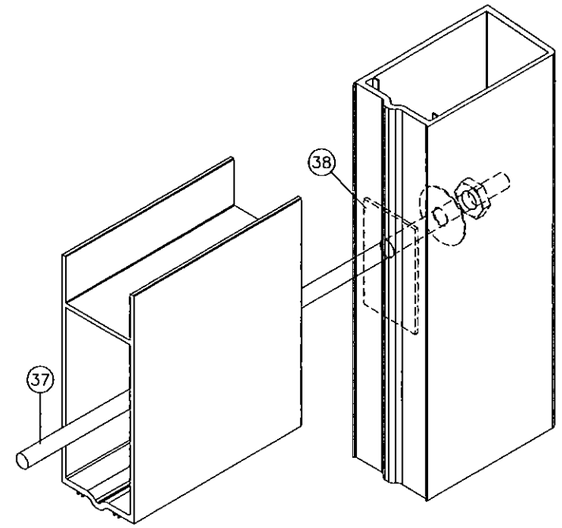

DOOR LEAF TOP/BOTTOM CORNER

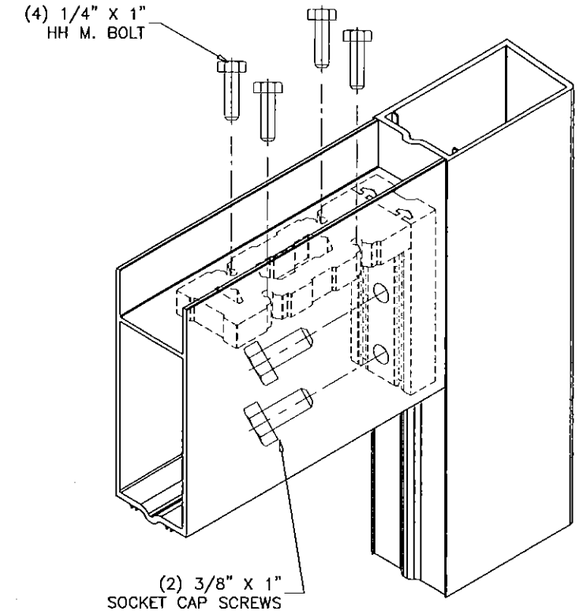

DOOR LEAF ALIGNMENT KEY
AT TOP/BOTTOM CORNER

PRODUCT REVISED
as complying with the Florida
Building Code
Acceptance No. 15-0106.04
Expiration Date Jan 10, 2018
By
Miami Dade Product Control

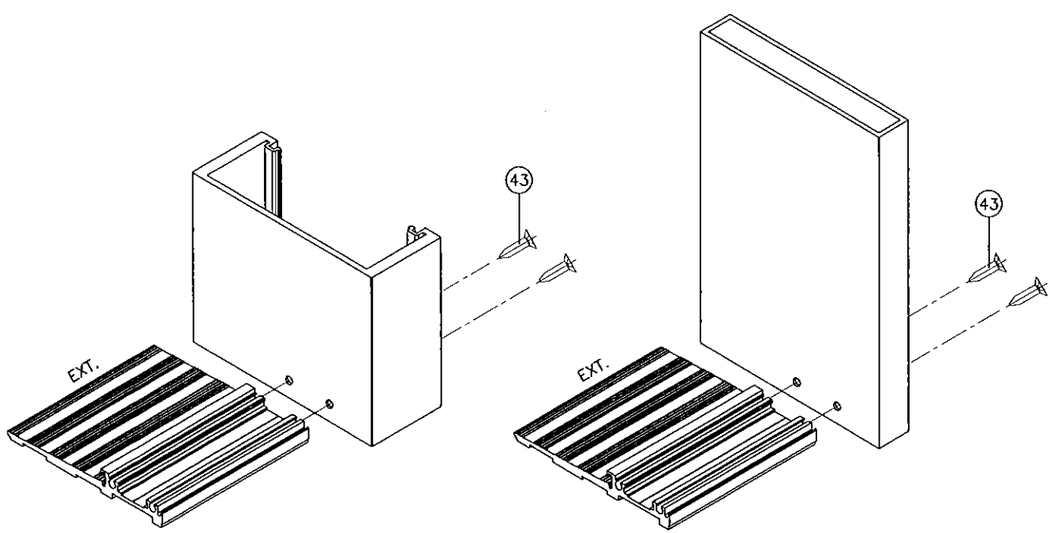

FRAME BOTTOM CORNER

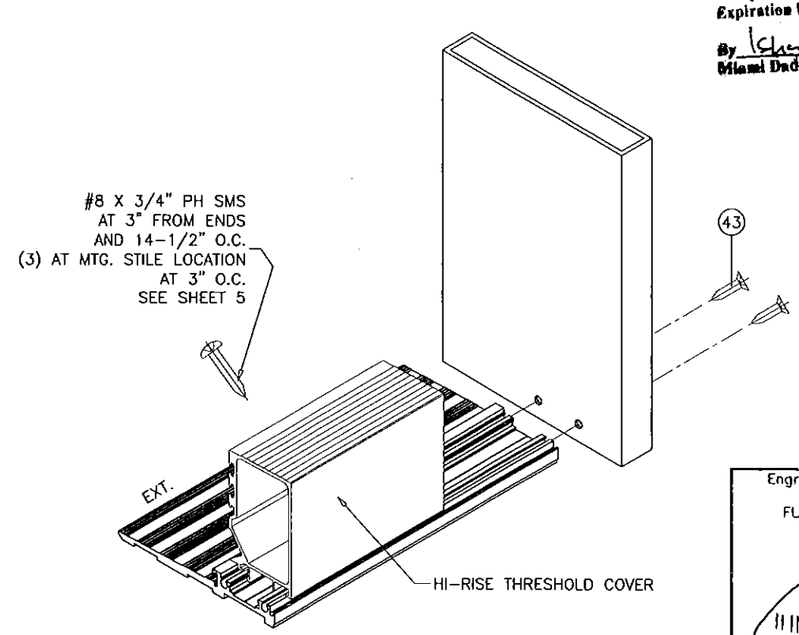

Engr: JAVAD AHMAD
CIVIL
FLA. PE # 70592
C.A.N. 3538

JUN 2015

AL-FAROOQ CORPORATION
ENGINEERS & PRODUCT DEVELOPMENT
1235 S.W. 87 AVE
MIAMI, FLORIDA 33174
TEL. (305) 264-8100 FAX. (305) 262-6978

COMP-ANL\W12-46SM

SERIES 'SUMMIT' ALUM OUTSWING DOOR (L.M.I.)

Aldora Aluminum & Glass Products Inc.
11500 MIRAMAR PARKWAY SUITE 300
MIRAMAR, FL. 33025
TEL. (305) 888-6288 FAX. (305) 888-6289

revisions:

no	date	by	description
A	12.04.12		REV. PER RER COMMENTS
B	08.12.13		MANUF. NAME REV.
C	12.15.14		NO CHANGE THIS SHEET
D	04.13.15		REV. PER RER COMMENTS

date: 08-09-12
scale: 3/8" = 1"
dr. by: HAMID
chk. by:

drawing no.
W12-46