MIAMI-DADE COUNTY
DEPARTMENT OF REGULATORY AND ECONOMIC RESOURCES (RER)
BOARD AND CODE ADMINISTRATION DIVISION

MIAMI–DADE COUNTY, FLORIDA
PRODUCT CONTROL SECTION
11805 SW 26 Street, Room 208
T (786) 315–2590 F (786) 315–2599
www.miamidade.gov/economy

NOTICE OF ACCEPTANCE (NOA)

PGT Industries, Inc.
1070 Technology Drive,
North Venice, Fl. 34275

SCOPE:

This NOA is being issued under the applicable rules and regulations governing the use of construction materials. The documentation submitted has been reviewed and accepted by Miami–Dade County RER–Product Control Section to be used in Miami–Dade County and other areas where allowed by the Authority Having Jurisdiction (AHJ).

This NOA shall not be valid after the expiration date stated below. The Miami–Dade County Product Control Section (In Miami–Dade County) and/ or the AHJ (in areas other than Miami–Dade County) reserve the right to have this product or material tested for quality assurance purposes. If this product or material fails to perform in the accepted manner, the manufacturer will incur the expense of such testing and the AHJ may immediately revoke, modify, or suspend the use of such product or material within their jurisdiction. RER reserves the right to revoke this acceptance, if it is determined by Miami–Dade County Product Control Section that this product or material fails to meet the requirements of the applicable building code.

This product is approved as described herein, and has been designed to comply with the Florida Building Code, including the High Velocity Hurricane Zone.

DESCRIPTION: Series "670–HP" Aluminum Sliding Glass Doors w / Reinforcements – N.I.

APPROVAL DOCUMENT: Drawing No. **PGT0003**, titled "Series 670 H.P. Aluminum SGD – N.I.", sheets 01 through 10 of 10, prepared by manufacturer, dated 08/05/07 and last revision "**D**" dated 03/02/15, signed and sealed by Lynn Miller, P. E., bearing the Miami–Dade County Product Control Section Renewal stamp with the Notice of Acceptance number and expiration date by the Miami–Dade County Product Control Section.

MISSILE IMPACT RATING: None.

LABELING: Each unit shall bear a permanent label with the manufacturer's name or logo, city, state, series, and following statement: "Miami–Dade County Product Control Approved", unless otherwise noted herein.

REVISION of this NOA shall be considered after a renewal application has been filed and there has been no change in the applicable building code negatively affecting the performance of this product.

TERMINATION of this NOA will occur after the expiration date or if there has been a revision or change in the materials, use, and/ or manufacture of the product or process. Misuse of this NOA as an endorsement of any product, for sales, advertising or any other purposes shall automatically terminate this NOA. Failure to comply with any section of this NOA shall be cause for termination and removal of NOA.

ADVERTISEMENT: The NOA number preceded by the words Miami–Dade County, Florida, and followed by the expiration date may be displayed in advertising literature. If any portion of the NOA is displayed, then it shall be done in its entirety.

INSPECTION: A copy of this entire NOA shall be provided to the user by the manufacturer or its distributors and shall be available for inspection at the job site at the request of the Building Official.

This NOA **renews NOA No. 11–1018.18** and consists of this page 1 and evidence pages E–1 and E–2, as well as approval document mentioned above.

The submitted documentation was reviewed by **Jaime D. Gascon , P. E.**

MIAMI-DADE COUNTY APPROVED

J. Gascon
3/11/15

PGT Industries, Inc.

NOTICE OF ACCEPTANCE: EVIDENCE SUBMITTED

A. DRAWINGS

1. Manufacturer's die drawings and sections.
2. Drawing No. **PGT0003**, titled "Series 670 H.P. Aluminum SGD – N.I.", sheets 01 through 10 of 10, prepared by manufacturer, dated 08/05/07 and last revision "**D**" dated 03/02/15, signed and sealed by Lynn Miller, P. E.

B. TESTS

1. Test reports on: 1) Air Infiltration Test, per FBC, TAS 202–94
   2) Uniform Static Air Pressure Test, Loading per FBC, TAS 202–94
   3) Water Resistance Test, per FBC, TAS 202–94
   4) Large Missile Impact Test per FBC, TAS 201–94
   5) Cyclic Wind Pressure Loading per FBC, TAS 203–94
   6) Forced Entry Test, per FBC 2411.3.2.1, and TAS 202–94

   along with marked–up drawings and installation diagram of Aluminum Sliding Glass Door (**XOX**), prepared by Fenestration Testing Laboratory, Inc., Test Report No. **FTL–7825,** dated 06/10/2014, signed and sealed by Idalmis Ortega, P. E.
2. Test reports on: 1) Air Infiltration Test, per FBC, TAS 202–94
   2) Uniform Static Air Pressure Test, Loading per FBC, TAS 202–94
   3) Water Resistance Test, per FBC, TAS 202–94
   4) Forced Entry Test, per FBC 2411.3.2.1, and TAS 202–94

   along with marked–up drawings and installation diagram of Aluminum Sliding Glass Doors **XOOX** & **XO**, both prepared by Fenestration Testing Laboratory, Inc., both Test Report No **FTL–5987** and **FTL–5995**, dated 08/10/09, both signed & sealed by Julio Gonzales, P. E.
   (Submitted under previous NOA No. 09–0826.14)

C. CALCULATIONS

1. Anchor verification calculations and structural analysis, complying with **FBC 5th Addition (2014)**, prepared by manufacturer, dated 03/05/15, signed and sealed by Lynn Miller, P.E.
2. **Glazing complies with ASTM E1300–04/ 09**

D. QUALITY ASSURANCE

1. Miami–Dade Department of Regulatory and Economic Resources (RER).

E. MATERIAL CERTIFICATIONS

1. None.

Jaime D. Gascon, P. E.
Product Control Section Supervisor
NOA No. 15–0106.07
Expiration Date: March 24, 2020
Approval Date: March 12, 2015

NOTICE OF ACCEPTANCE: EVIDENCE SUBMITTED

F. STATEMENTS

1. Statement letter of conformance to and complying with **FBC 5th Edition (2014)**, issued by manufacturer, dated 12/31/14, signed and sealed by Lynn Miller, P. E.
2. Laboratory compliance letter for Test Report No. **FTL–7825**, issued by Fenestration Testing Laboratory, Inc., dated 06/10/14, signed and sealed by Idalmis Ortega, P. E.
3. Department of State Certification of **PGT INDUSTRIES, INC.** as a for profit corporation, active and organized under the laws of the State of Florida, dated 01/27/15 and filed by the Secretary of State.
4. Statement letter of conformance to and complying with **FBC–2010**, issued by manufacturer, dated 10/11/11, signed and sealed by Lynn Miller, P. E.
   (Submitted under previous NOA No. 11–1018.18)
5. Statement letter of no financial interest, issued by manufacturer, dated 10/11/11, signed and sealed by Lynn Miller, P. E.
   (Submitted under previous NOA No. 11–1018.18)
6. Notification of Successor Engineer for manufacturer's NOA document per **Section 61G15-27.001** of the **Florida Administrative Code**, notifying original engineer that the successor engineer is assuming full professional and legal responsibility for all engineering documents pertaining to this NOA, dated 10/07/11, signed and sealed by Lynn Miller, P. E.
   (Submitted under previous NOA No. 11–1018.18)
7. Laboratory compliance letter for Test Reports No.'s **FTL–5987** and **FTL–5995**, both issued by Fenestration Testing Laboratory, Inc., dated 08/10/09, both signed & sealed by Julio Gonzales, P. E.
   (Submitted under previous NOA No. 09–0826.14)
8. Proposals No.'s **08–0452–A**, **–B** and **–C** all issued by the Product Control, dated 07/22/09, signed by Ishaq Chanda, P. E.
   (Submitted under previous NOA No. 09–0826.14)

G. OTHERS

1. Notice of Acceptance No. **11–1018.18**, issued to PGT Industries, Inc. for their Series **"670HP Aluminum Sliding Glass Doors w / Reinforcements – N.I."**, approved on 12/15/11 and expiring on 03/24/15.

Jaime D. Gascon, P. E.
Product Control Section Supervisor
NOA No. 15–0106.07
Expiration Date: March 24, 2020
Approval Date: March 12, 2015

GENERAL NOTES: SERIES 670 H.P. NON-IMPACT SLIDING GLASS DOOR

1. GLAZING TYPE OPTIONS: (GLASS RECIPES ARE FROM EXTERIOR TO INTERIOR)
   G1 - (1) LITE OF 3/16" TEMPERED GLASS.
   G1A - (1) LITE OF 1/4" TEMPERED GLASS.
   G2 - 1" I.G.: (1) LITE OF 3/16" TEMPERED GLASS + 5/8" AIR SPACE + (1) LITE OF 3/16" TEMPERED GLASS.
   G2A - 1" I.G.: (1) LITE OF 1/4" TEMPERED GLASS + 1/2" AIR SPACE + (1) LITE OF 1/4" TEMPERED GLASS.
2. DESIGN PRESSURES: A. NEGATIVE DESIGN LOADS BASED ON TESTED PRESSURE AND GLASS TABLES ASTM E 1300.
   B. POSITIVE DESIGN LOADS BASED ON WATER TEST PRESSURE AND GLASS TABLES ASTM E 1300.
3. ANCHORAGE: THE 33 1/3% STRESS INCREASE HAS NOT BEEN USED IN THE DESIGN OF THIS PRODUCT. MATERIALS, INCLUDING BUT NOT LIMITED TO STEEL SCREWS, THAT COME INTO CONTACT WITH OTHER DISSIMILAR MATERIALS SHALL MEET THE REQUIREMENTS OF THE FLORIDA BUILDING CODE. FOR ANCHORAGE DETAILS SEE SHEET 6.
4. SHUTTERS ARE REQUIRED.
5. INSTALLATION SCREWS, FRAME AND PANEL CORNERS TO BE SEALED WITH NARROW JOINT SEALANT.
6. REFERENCES: TEST REPORTS FTL-5987 AND FTL-5995, DATED 08/07/09 AND FTL-7825.
   ELCO TEXTRON NOA, ANSI/AF&PA NDS FOR WOOD CONSTRUCTION AND ADM, ALUMINUM DESIGN MANUAL
7. THIS PRODUCT HAS BEEN DESIGNED & TESTED TO COMPLY WITH THE REQUIREMENTS OF THE FLORIDA BUILDING CODE, INCLUDING THE HIGH VELOCITY HURRICANE ZONE (HVHZ).
8. DOOR SIZES MUST BE VERIFIED FOR COMPLIANCE WITH EGRESS REQUIREMENTS PER FLORIDA BUILDING CODE, AS APPLICABLE.
9. CONFIGURATIONS: STRAIGHT DOORS - MAXIMUM 2 TRACKS BY 9 FT. (108") HIGH WITH A MAXIMUM OF FOUR 4 FT. NOMINAL WIDE DOOR PANELS.
   SEE EXAMPLE ELEVATION AND PANEL CONFIGURATIONS ON SHEET 7.
   D.L.O. WIDTH = NOMINAL PANEL WIDTH - 7"
   D.L.O. HEIGHT = NOMINAL PANEL HEIGHT - 8.25"

DESIGN PRESSURE CHART (PSF)

SEE TABLES 1 & 1A, SHEET 4

NOA DRAWING MAP

	SHEET
GENERAL NOTES	1
ELEVATIONS	2
GLAZING DETAILS	3
ANCHORAGE	4-6
DESIGN PRESSURES	4
ELEVATIONS	7
CONFIGURATIONS	7
VERT. SECTIONS	8
HORIZ. SECTIONS	8
PARTS LIST	9
EXTRUSIONS	10

NOTES PERTAINING TO ANCHORAGE DETAILS ON SHEET 5-6:

1. FOR CONCRETE APPLICATIONS IN MIAMI-DADE COUNTY, USE ONLY MIAMI-DADE COUNTY APPROVED ELCO 1/4" OR 5/16" ULTRACON (FORMERLY TAPCON) CONCRETE SCREWS OR 1/4" ELCO SS4 CRETE-FLEX. SEE TABLE ON THIS SHEET FOR EMBEDMENT, EDGE DISTANCE AND SUBSTRATE REQUIREMENTS.
2. FOR WOOD APPLICATIONS USE #12 STEEL SCREWS (G5). 1/4" ELCO SS4 CRETE-FLEX MAY BE USED INSTEAD OF #12 SCREWS.
3. WOOD BUCKS DEPICTED AS 1x ARE LESS THAN 1 1/2" THICK. 1x WOOD BUCKS ARE OPTIONAL IF UNIT IS INSTALLED DIRECTLY TO SOLID CONCRETE. WOOD BUCKS DEPICTED AS 2x ARE 1 1/2" THICK OR GREATER. 1X AND 2X BUCKS (WHEN USED) SHALL BE DESIGNED TO PROPERLY TRANSFER LOADS TO THE STRUCTURE. BUCK DESIGN AND INSTALLATION IS THE RESPONSIBILITY OF THE ENGINEER OR ARCHITECT OF RECORD.
4. FOR ATTACHMENT TO ALUMINUM: THE ALUMINUM SHALL BE A MINIMUM STRENGTH OF 6063-T5 AND A MINIMUM OF 1/8" THICK. THE ALUMINUM STRUCTURAL MEMBER SHALL BE OF A SIZE TO PROVIDE FULL SUPPORT TO THE DOOR FRAME SIMILAR TO THAT SHOWN IN THE DETAILS USING 2x WOOD BUCKS. THE ANCHORS SHALL BE #12 SHEET METAL SCREWS WITH FULL THREAD ENGAGEMENT INTO THE ALUMINUM. IF THESE CRITERIA ARE MET, THE FULL DESIGN PRESSURES USING ANCHORAGE REQUIREMENTS SHOWN IN TABLES 1, SHTS. 4, FOR ANCHOR TYPE 4 ARE ACCEPTABLE.
5. IF SILL IS TIGHT TO SUBSTRATE, GROUT OR OTHER MATERIAL IS NOT REQUIRED. IF USED, NON-SHRINK, NON-METALLIC GROUT, 3400 PSI MIN., (DONE BY OTHERS) MUST FULLY SUPPORT THE ENTIRE LENGTH OF THE SILL THAT IS NOT TIGHT TO THE SUBSTRATE, AND TRANSFER SHEAR LOAD TO SUBSTRATE. IF SUBSTRATE IS WOOD, 30# FELT PAPER OR MASTIC IS REQUIRED BETWEEN THE GROUT AND WOOD SUBSTRATE, OR AS APPROVED BY THE AUTHORITY HAVING JURISDICTION.

Concrete Screw Anchorage Minimum Embedment and Minimum Edge Distance Requirements

		Head and Sill		Jambs			
		Concrete		Un-Grouted CMU		Grouted CMU	
Type	Dia.	Min. Emb.	Min. Ed	Min. Emb.	Min. Ed	Min. Emb.	Min. Ed
Elco Ultracon	1/4"	1 3/8	2 1/2	1 1/4	2 1/2	1 3/4	2 1/2
	5/16"	1 3/4	1 1/4	1 1/4	1 9/16	1 3/4	2 1/2
Elco Crete-Flex SS4	1/4"	1 3/4	2 1/2	1 1/4	2 1/2	Not Recommended	

Concrete Strength Requirements		
Type	Dia.	fc'
Elco Ultracon	1/4"	2700 psi
	5/16"	3500 psi
Elco Crete-Flex SS4	1/4"	3350 psi

Masonry Strength Requirements	
Ungrounted CMU	ASTM C-90
Grouted CMU	ASTM C-90 with grout conforming to Sections 2105.2.2.1.2 and R609 of the FBC.

Definitions:
Emb. = Embedment
Ed = Edge Distance
Min. = Minimum

CONCRETE SCREWS STRENGTHS:
Fy MIN. = 135 KSI
Fu MIN. = 177 KSI

Wood Screws (Head, Sill & Jambs) in.		
Type	Min. Emb.	Min. Ed
#12 Wood Screw	1 3/8"	1"
Elco Crete-Flex SS4	1 3/8"	1"

UNLESS OTHERWISE NOTED

PRODUCT RENEWED
as complying with the Florida Building Code
Acceptance No 15-0106.07
Expiration Date 03/24/2020
By
Miami Dade Product Control

ANTHONY LYNN MILLER
LICENSE
No. 58705
3/5/15
STATE OF FLORIDA
PROFESSIONAL ENGINEER
A. LYNN MILLER, P.E.
P.E.# 58705

Revsd By:	Date:	Revisions:	
J.R.	03/02/15	D	REMOVED NOA #, YEAR OF STANDARD FROM NOTES
J.J.	10/11/11	C	FBC 2010 CODE CHANGE, SHUTTER NOTE REVISED
SMC	02/23/10	B	PER MIAMI DADE COMMENTS
Drawn By: SMC	Date: 08/05/07	Checked By: RJA	Date:

1070 TECHNOLOGY DRIVE
NOKOMIS, FL 34275

P.O. BOX 1529
NOKOMIS, FL 34274

Description: GENERAL NOTES AND MAP

Title: SERIES 670 H.P. ALUM. SGD - NON-IMPACT

Series/Model:	Scale:	Sheet:	Drawing No.	Rev:
SGD670 H.P.	NTS	1 of 10	PGT0003	D

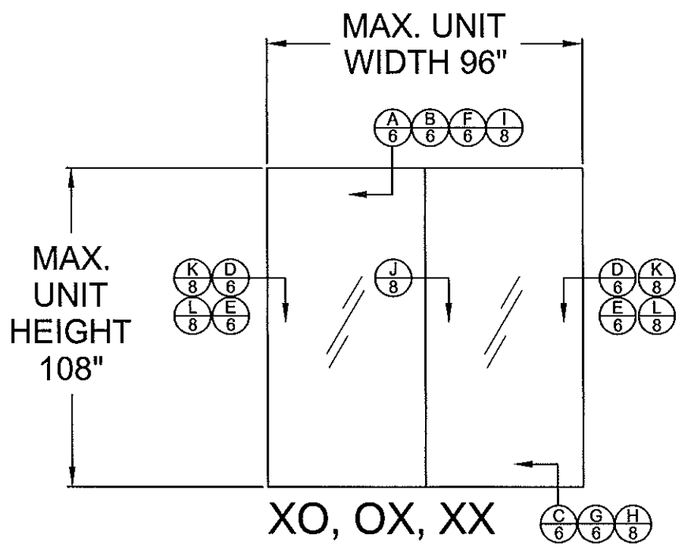

XO, OX, XX

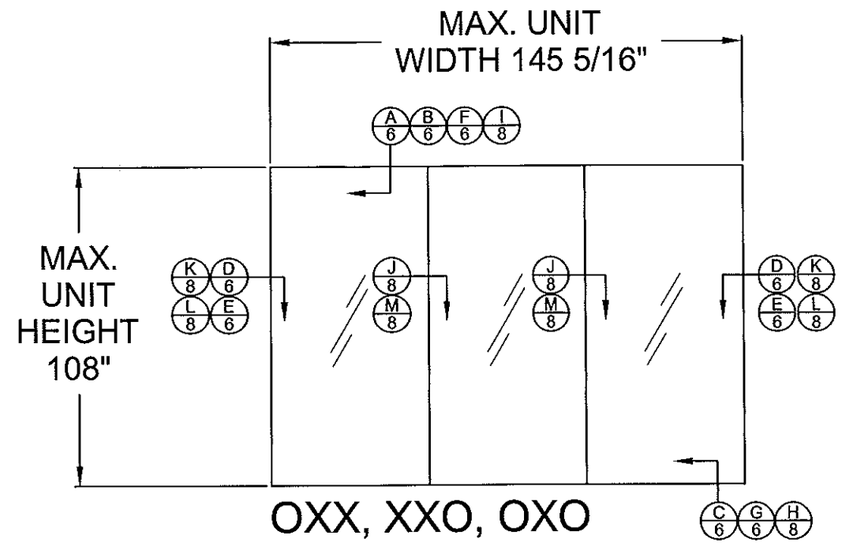

OXX, XXO, OXO

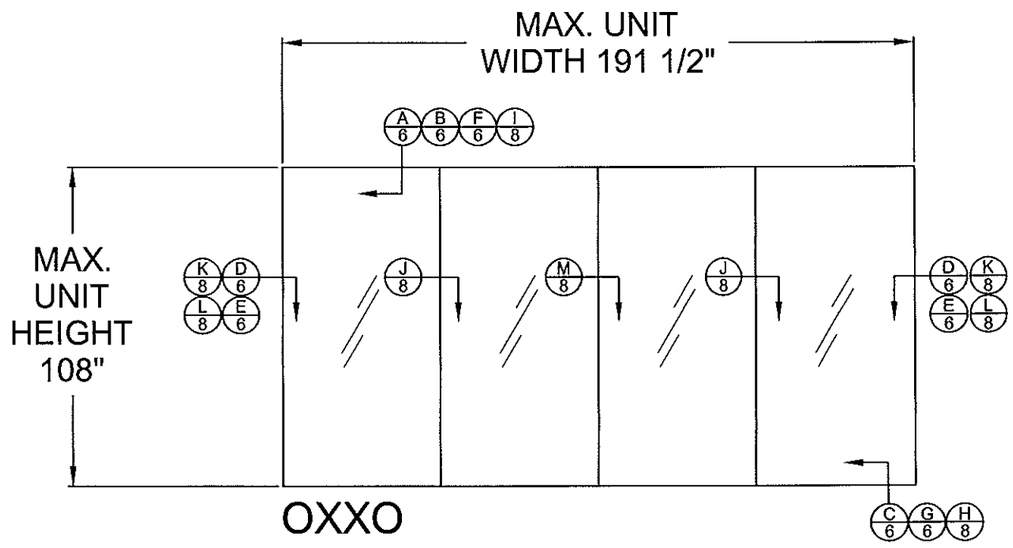

OXXO

APPROVED CONFIGURATIONS

PRODUCT RENEWED
as complying with the Florida
Building Code
Acceptance No 15-0106.07
Expiration Date 03/24/2020
By
Miami Dade Product Control

ANTHONY LYNN MILLER
LICENSE
No. 58705
3/5/15
STATE OF
FLORIDA
PROFESSIONAL ENGINEER
A. LYNN MILLER, P.E.
P.E.# 58705

Revsd By:	Date:	Revisions:	
J.R.	03/02/15	D	NO CHANGE THIS SHEET
J.J.	10/11/11	C	NO CHANGE THIS SHEET
SMC	02/23/10	B	PER MIAMI DADE COMMENTS
Drawn By: SMC	Date: 08/05/09	Checked By: RJA	Date:

1070 TECHNOLOGY DRIVE
NOKOMIS, FL 34275

P.O. BOX 1529
NOKOMIS, FL 34274

PGT®

Description: ELEVATIONS

Title: SERIES 670 H.P. ALUM. SGD - NON-IMPACT

Series/Model:	Scale:	Sheet:	Drawing No.	Rev:
SGD670 H.P.	NTS	2 of 10	PGT0003	D

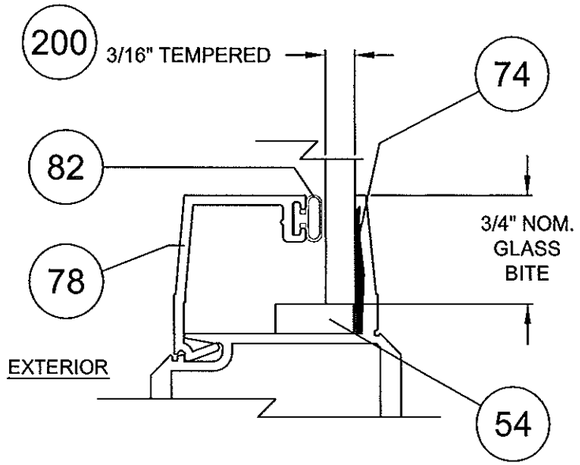

3/16" TEMPERED - TYPE G1

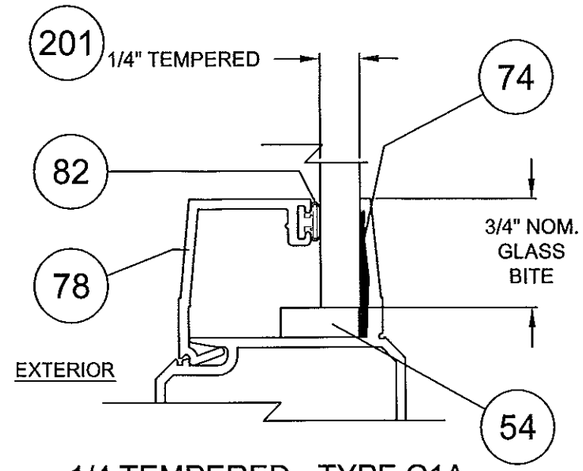

1/4 TEMPERED - TYPE G1A

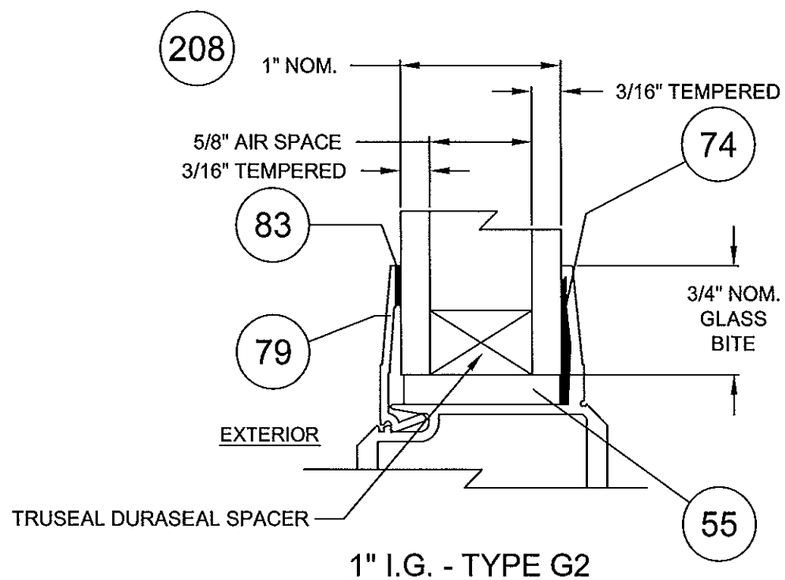

1" I.G. - TYPE G2

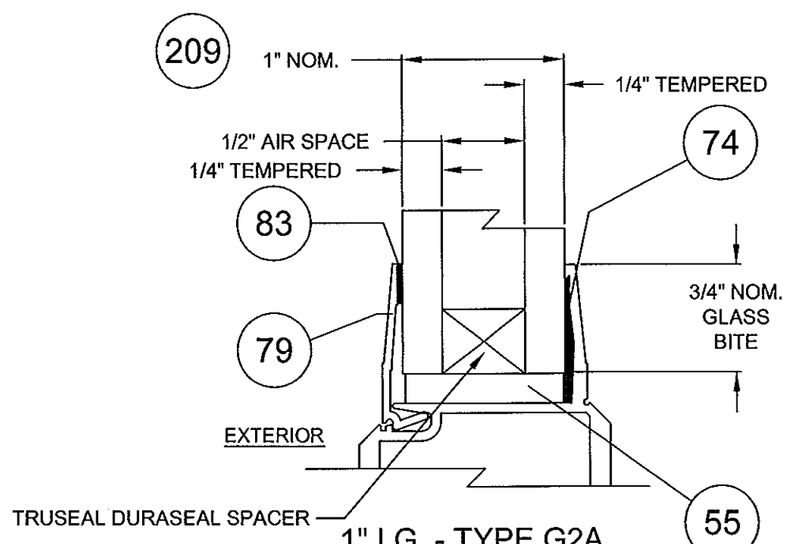

1" I.G. - TYPE G2A

PRODUCT RENEWED
as complying with the Florida
Building Code
Acceptance No 15-0106.07
Expiration Date 03/24/2020
By
Miami Dade Product Control

ANTHONY LYNN MILLER
LICENSE
No. 58705
STATE OF
FLORIDA
PROFESSIONAL ENGINEER
3/5/15

A. LYNN MILLER, P.E.
P.E.# 58705

Revsd By:	Date:	Revisions:	
J.R.	03/02/15	D	NO CHANGE THIS SHEET
J.J.	10/11/11	C	NO CHANGE THIS SHEET
SMC	02/23/10	B	PER MIAMI DADE COMMENTS
Drawn By: SMC	Date: 08/05/09	Checked By: RJA	Date:

1070 TECHNOLOGY DRIVE
NOKOMIS, FL 34275

P.O. BOX 1529
NOKOMIS, FL 34274

PGT®

Description: GLAZING DETAILS

Title: SERIES 670 H.P. ALUM. SGD - NON-IMPACT

Series/Model:	Scale:	Sheet:	Drawing No.	Rev:
SGD670 H.P.	NTS	3 of 10	PGT0003	D

DESIGN PRESSURE AND ANCHORAGE- REINFORCEMENT- HIGH SILL RISER (4.00") TABLE 1.

> HEAD & SILL (H&S) INTERLOCK & ASTRAGAL CLUSTER PLUS ANCHOR QTY. PER PANEL

> JAMB ANCHOR QTY.

3/16" TEMPERED (Mono. & I.G.U.)
GLASS TYPE: G1 & G2
1/4" TEMPERED (Mono. & I.G.U.)
GLASS TYPE: G1A & G2A

Anchor Types:
1) *1/4" ELCO ULTRACON (FORMERLY TAPCON)
2) *1/4" SS4 CRETE-FLEX
3) *5/16" ULTRACON
4) *#12 STEEL SCREW (G5)
* SEE ANCHORAGE NOTES 1 & 2 ON SHEET 1.

			UNIT HEIGHT																	
			80			84			90			96			102			108		
NOM. PANEL WIDTH		FRAME SIDE	1,2 - CONC	3 - CONC	2,4 - WOOD	1,2 - CONC	3 - CONC	2,4 - WOOD	1,2 - CONC	3 - CONC	2,4 - WOOD	1,2 - CONC	3 - CONC	2,4 - WOOD	1,2 - CONC	3 - CONC	2,4 - WOOD	1,2 - CONC	3 - CONC	2,4 - WOOD
GLASS TYPE - G1, G1A, G2, G2A			+90 -209.0			+90 -209.0			+90 -209.0			+90 -209.0			+90 -205.3			+90 -192.5		
24	Anchors	H&S	C6+2	C6+2	C7+2	C6+2	C6+2	C7+2	C6+2	C6+2	C7+2	C6+2	C6+2	C8+2	C6+2	C6+2	C8+2	C6+2	C6+2	C8+2
		JAMB	10	10	10	10	10	12	10	10	12	10	10	12	10	10	14	10	10	14
GLASS TYPE - G1, G1A, G2, G2A			+90 -209.0			+90 -209.0			+90 -197.1			+90 -182.5			+90 -169.9			+90 -159.0		
30	Anchors	H&S	C6+2	C6+2	C8+2	C6+2	C6+2	C8+2	C6+2	C6+2	C8+2	C6+2	C6+2	C8+2	C6+2	C6+2	C8+2	C6+2	C6+2	C8+2
		JAMB	10	10	12	10	10	12	10	10	14	10	10	14	10	10	14	10	10	14
GLASS TYPE - G1, G1A, G2, G2A			+90 -171.0			+90 -164.0			+90 -157.0			+90 -151.0			+90 -146.0			+90 -136.9		
36	Anchors	H&S	C6+2	C6+2	C7+2	C6+2	C6+2	C7+2	C6+2	C6+2	C8+2	C6+2	C6+2	C8+2	C6+2	C6+2	C8+2	C6+2	C6+2	C8+2
		JAMB	10	10	12	10	10	12	10	10	12	10	10	12	10	10	14	10	10	14
GLASS TYPE - G1			+90 -153.0			+90 -142.0			+90 -128.0			+90 -118.0			+90 -110.0			+90 -104.0		
GLASS TYPE - G1A, G2, G2A			+90 -153.0			+90 -142.0			+90 -128.0			+90 -118.0			+90 -110.0			+90 -121.4		
42	Anchors	H&S	C6+2	C6+2	C7+3	C6+2	C6+2	C7+3	C6+2	C6+2	C7+2	C6+2	C6+2	C7+2	C6+2	C6+2	C7+2	C6+2	C6+2	C8+2
		JAMB	10	10	12	10	10	12	10	10	12	10	10	12	10	10	12	10	10	14
GLASS TYPE - G1			+90 -151.0			+90 -140.0			+90 -124.0			+90 -113.0			+90 -103.0			+90 -94.2		
GLASS TYPE - G1A, G2, G2A			+90 -151.0			+90 -140.0			+90 -124.0			+90 -113.0			+90 -118.5			+90 -110.0		
48	Anchors	H&S	C6+2	C6+2	C8+4	C6+2	C6+2	C8+3	C6+2	C6+2	C7+3	C6+2	C6+2	C7+3	C6+2	C6+2	C8+3	C6+2	C6+2	C8+3
		JAMB	10	10	12	10	10	12	10	10	12	10	10	12	10	10	14	10	10	14

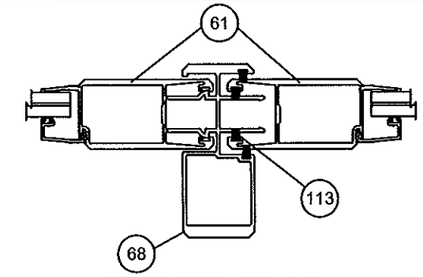

HEAVY DUTY ASTRAGAL
HEAVY DUTY STILES

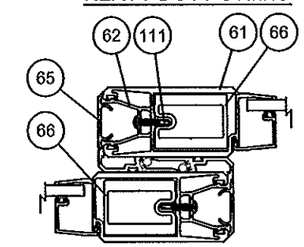

ALL INTERLOCKS TO BE REINFORCED

1. POSITIVE PRESSURES IN TABLE ARE BASED ON THE USE OF THE 4" SILL.
2. WHEN USING THE 2 1/2" SILL, POSITIVE DP IS 46.67 PSF MAX. AND WITH THE 3 1/4" SILL, POSITIVE PRESSURES IS 60.0 PSF MAX. (NEGATIVE PRESSURES UNCHANGED). SEE TABLE 1A ON THIS SHEET.
3. 2 1/2", 3 1/4" AND 4" SILL HEIGHTS ARE TESTED FOR WATER INFILTRATION WHEREAS THE 1 1/2" SILL IS NOT AND MUST ONLY BE USED WHERE WATER RESISTANCE IS NOT REQUIRED. POSITIVE DESIGN PRESSURES SHOWN IN TABLE 1 MAY BE USED WHEN THE DOOR IS PROTECTED BY AN OVERHANG COMPLYING WITH THE FLORIDA BUILDING CODE (SEE ADJACENT DIAGRAM); THIS CONDITION IS NOT RATED FOR WATER INFILTRATION.
4. SEE SHEET 6 FOR ANCHORAGE SPACING AND EMBEDMENT INFORMATION.
5. DOOR SIZE TO COMPLY WITH FBC EGRESS REQUIREMENTS.

DLO WIDTH = NOM. PANEL WIDTH - 7"
DLO HEIGHT = NOM. PANEL HEIGHT - 8.25"

= EXAMPLE ON SHEET 5

TABLE 1A.		
SILL HT. VS POS. DP		
SILL RISE HEIGHT		(+) DESIGN LOAD
FLUSH	1-1/2"	N/A
LOW	2-1/2"	+ 46.67 PSF
MED	3-1/4"	+ 60.0 PSF
HIGH	4"	+ 90.0 PSF
SEE NOTES 1-3		

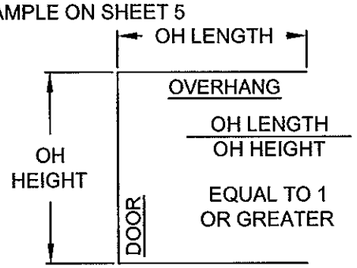

OH LENGTH / OH HEIGHT EQUAL TO 1 OR GREATER

SEE NOTE 3

PRODUCT RENEWED
as complying with the Florida Building Code
Acceptance No 15-0106.07
Expiration Date 03/27/2020
By
Miami Dade Product Control

ANTHONY LYNN MILLER
LICENSE
No. 58705
3/5/15
STATE OF FLORIDA
PROFESSIONAL ENGINEER
A. LYNN MILLER, P.E.
P.E.# 58705

Revsd By:	Date:	Revisions:	
J.R.	03/02/15	D	NO CHANGE THIS SHEET
J.J.	10/11/11	C	NO CHANGE THIS SHEET
SMC	02/23/10	B	PER MIAMI DADE COMMENTS
Drawn By: SMC	Date: 8/5/09	Checked By:	Date:

1070 TECHNOLOGY DRIVE
NOKOMIS, FL 34275

P.O. BOX 1529
NOKOMIS, FL 34274

PGT®

Description: DP AND ANCHORAGE CHART

Title: SERIES 670 H.P. ALUM. SGD - NON-IMPACT

Series/Model:	Scale:	Sheet:	Drawing No.	Rev:
SGD670 H.P.	NTS	4 of 10	PGT0003	D

ANCHORAGE REQUIREMENTS NOTES:

1. APPROVED ANCHOR TYPES: 1) 1/4" ELCO ULTRACON (FORMERLY TAPCON) 2) 1/4" ELCO SS4 CRETE-FLEX 3) 5/16" ULTRACON 4) #12 STEEL SCREW (G5)
2. ANCHOR LOCATION SPACING FOR ANCHOR QUANTITIES SPECIFIED IN TABLE 1 ON SHEET 4:

HEAD & SILL..... 8" MAX. FROM FRAME CORNERS. USE SPECIFIED CLUSTER FROM TABLE ON SHEET 4 AT EACH INTERLOCK AND ASTRAGAL LOCATION, PLUS SPECIFIED QUANTITY OF ADDITIONAL INTERMEDIATE ANCHORS PER PANEL (THE 8" FROM CORNER ANCHORS CAN BE INCLUDED). ADDITIONAL ANCHORS 24" MAX. ON CENTER. SEE EXAMPLE ANCHORAGE PLANS BELOW AND EXAMPLE CLUSTERS AT ASTRAGAL / INTERLOCKS ON SHEET 6.

JAMBS..... 6" MAX. FROM BOTTOM AND 21" MAX. O.C. UTILIZING JAMB ANCHOR QUANTITIES FROM TABLE ON SHEET 4.

"ANCHORS PER PANEL" ARE THOSE AT THE HEAD AND SILL BETWEEN CLUSTERS OR THOSE BETWEEN A CLUSTER AND A FRAME JAMB.

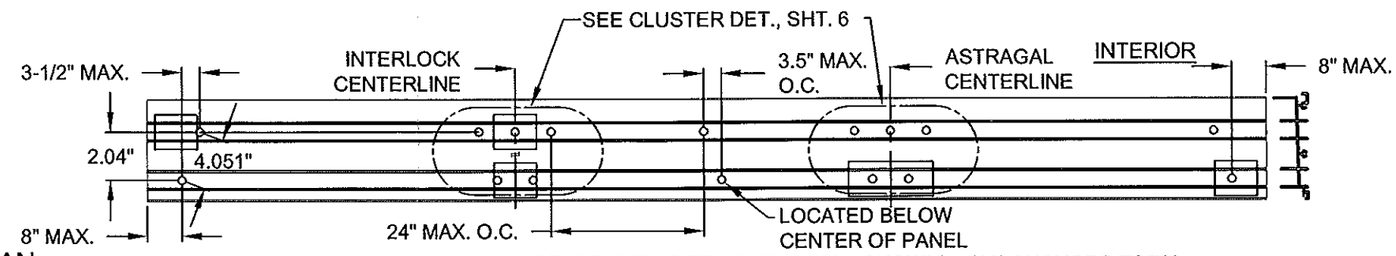

EXAMPLE OXX ANCHORAGE PLAN:

C5+3 HEAD & SILL ANCHORAGE (3 PANEL, 2-TRACK EXAMPLE SHOWN) = (16) ANCHORS TOTAL

(3) PANEL, 48" x 96" DOOR FROM TABLE ON SHEET 4, ANCHOR TYPES 1 & 2 IN CONCRETE SUBSTRATE

C8+3 = (36) ANCHORS TOTAL AT HEAD AND AT SILL

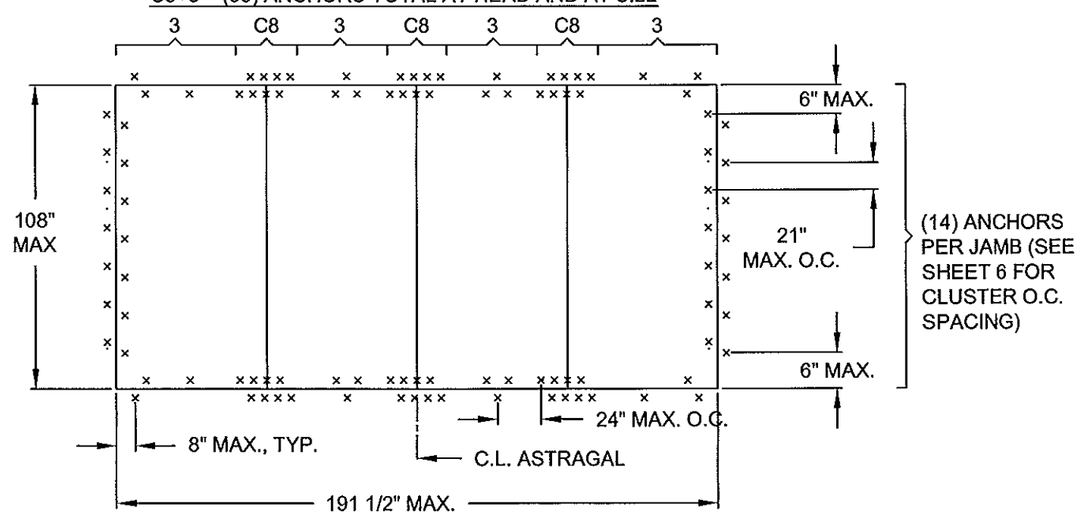

EXAMPLE OXXO ANCHORAGE PLAN:

(4) PANEL, 48" x 108" DOOR FROM TABLE ON SHEET 4, ANCHOR TYPES 2 & 4 IN WOOD SUBSTRATE

PRODUCT RENEWED as complying with the Florida Building Code Acceptance No 15-0106.07 Expiration Date 03/24/2020 By Miami Dade Product Control

ANTHONY LYNN MILLER LICENSE No. 58705 STATE OF FLORIDA PROFESSIONAL ENGINEER 3/5/15

A. LYNN MILLER, P.E. P.E.# 58705

Revsd By:	Date:	Revisions:	
J.R.	03/02/15	D	NO CHANGE THIS SHEET
J.J.	10/11/11	C	NO CHANGE THIS SHEET
SMC	02/23/10	B	PER MIAMI DADE COMMENTS
Drawn By: SMC	Date: 08/05/09	Checked By: RJA	Date:

1070 TECHNOLOGY DRIVE NOKOMIS, FL 34275

P.O. BOX 1529 NOKOMIS, FL 34274

PGT®

Description: ANCHORAGE SPACING & EXAMPLE PLANS

Title: SERIES 670 H.P. ALUM. SGD - NON-IMPACT

Series/Model:	Scale:	Sheet:	Drawing No.	Rev:
SGD670 H.P.	NTS	5 of 10	PGT0003	D

EXTERIOR INTERIOR
(ALL VERT. SECTIONS)

NOTE:
ALL DIMENSIONS SHOWN ARE BASED ON MINIMUM ALLOWED.

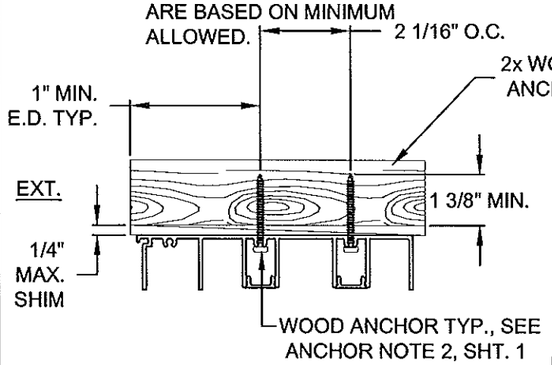

DETAIL A, 2-TRACK W/ SCREEN FRAME HEAD WOOD INSTALLATION

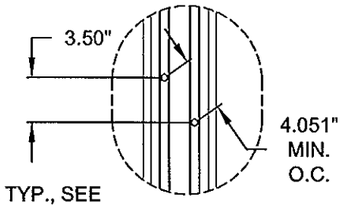

TYPICAL JAMB CLUSTER FOR DETAILS "D" & "E"

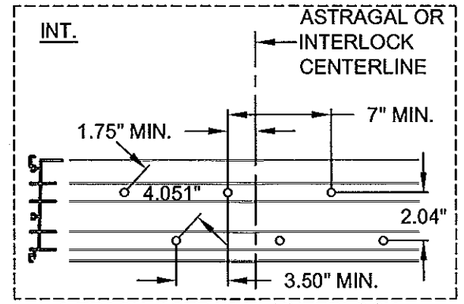

2-TRACK, ASTRAGAL / INTERLOCK 6 ANCHOR CLUSTER

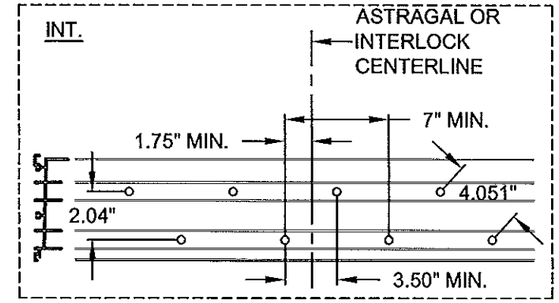

2-TRACK, ASTRAGAL / INTERLOCK 8 ANCHOR CLUSTER

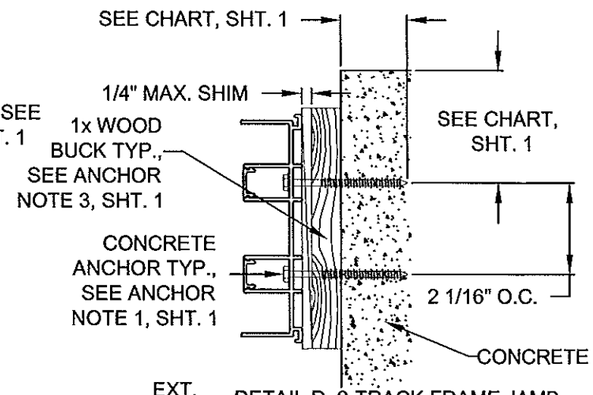

DETAIL D, 2-TRACK FRAME JAMB CONCRETE INSTALLATION

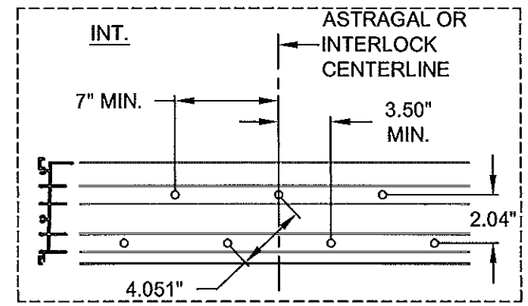

2-TRACK, ASTRAGAL / INTERLOCK ANCHOR CLUSTER - C7

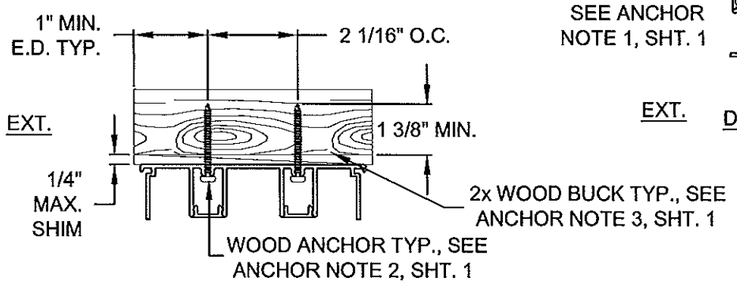

DETAIL B, 2-TRACK FRAME HEAD WOOD INSTALLATION

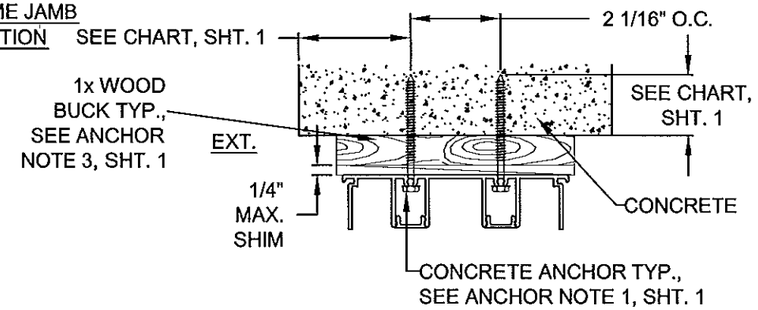

DETAIL F, 2-TRACK FRAME HEAD CONCRETE INSTALLATION

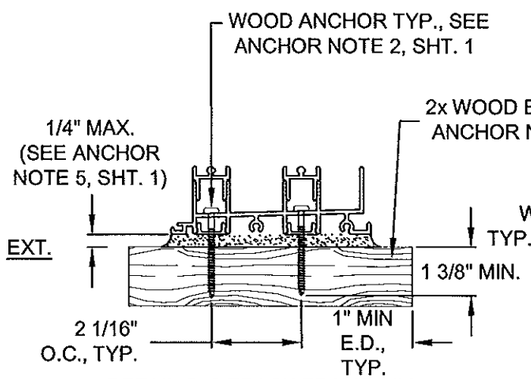

DETAIL C, 2-TRACK FRAME SILL WOOD INSTALLATION

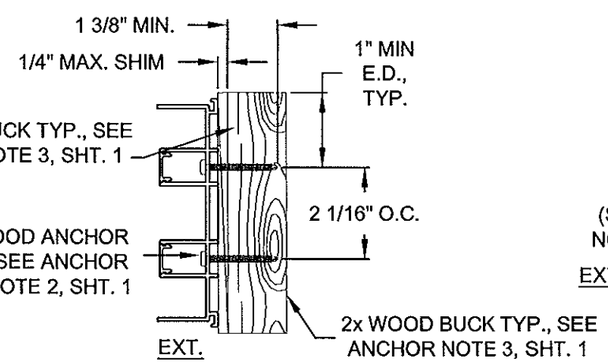

DETAIL E, 2-TRACK FRAME JAMB WOOD INSTALLATION

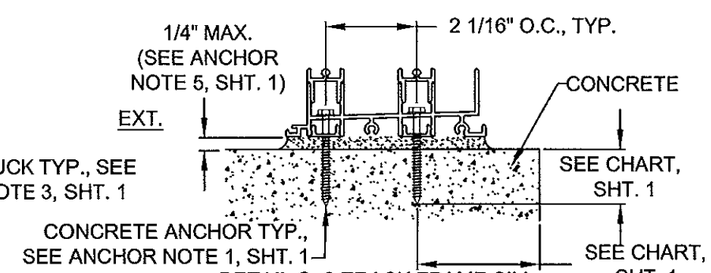

DETAIL G, 2-TRACK FRAME SILL CONCRETE INSTALLATION

PRODUCT RENEWED
as complying with the Florida Building Code
Acceptance No 15-0106.07
Expiration Date 03/24/2020
By
Miami Dade Product Control

ANTHONY LYNN MILLER
LICENSE
No. 58705
STATE OF FLORIDA
PROFESSIONAL ENGINEER
3/5/15
A. LYNN MILLER, P.E.
P.E.# 58705

Revsd By:	Date:	Revisions:	
J.R.	03/02/15	D	NO CHANGE THIS SHEET
J.J.	10/11/11	C	NO CHANGE THIS SHEET
SMC	02/23/10	B	PER MIAMI DADE COMMENTS
Drawn By: SMC	Date: 08/05/09	Checked By: RJA	Date:

1070 TECHNOLOGY DRIVE
NOKOMIS, FL 34275

P.O. BOX 1529
NOKOMIS, FL 34274

PGT®

Description: ANCHORAGE, EXAMPLE CLUSTERS

Title: SERIES 670 H.P. ALUM. SGD - NON-IMPACT

Series/Model:	Scale:	Sheet:	Drawing No.	Rev:
SGD670 H.P.	NTS	6 of 10	PGT0003	D

PANEL LETTER		
K	SINGLE INTERLOCK	LOCKSTILE
A	SINGLE INTERLOCK	LOCKSTILE
D	LOCKSTILE	SINGLE INTERLOCK
M	LOCKSTILE	SINGLE INTERLOCK
L (BOX OUT)	SINGLE INTERLOCK	ASTRAGAL OUT
LR (BOX OUT)	ASTRAGAL OUT	SINGLE INTERLOCK
N (BOX OUT)	ASTRAGAL IN	SINGLE INTERLOCK
C (BOX IN)	SINGLE INTERLOCK	ASTRAGAL IN
P	SINGLE INTERLOCK	FIXED LOCKSTILE
R	FIXED LOCKSTILE	SINGLE INTERLOCK
T (BOX OUT)	ASTRAGAL OUT	FIXED LOCKSTILE
T (BOX IN)	ASTRAGAL IN	FIXED LOCKSTILE
S (BOX OUT)	FIXED LOCKSTILE	ASTRAGAL OUT
S (BOX IN)	FIXED LOCKSTILE	ASTRAGAL IN

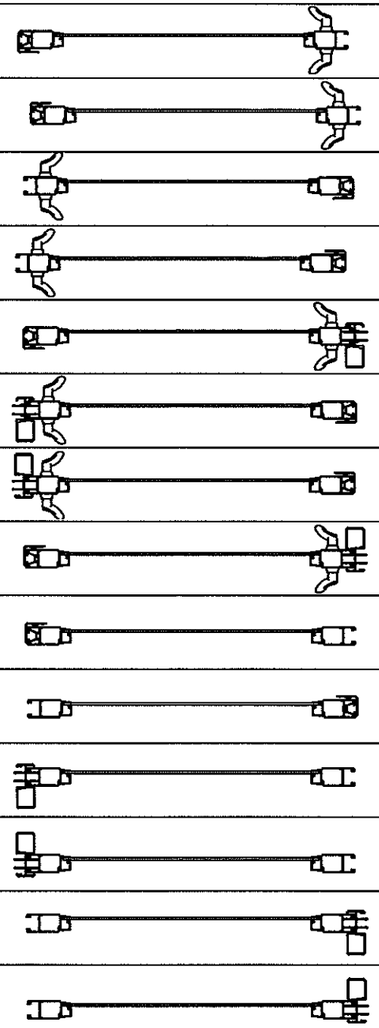

INTERIOR
(ALL PANEL TYPES)
EXTERIOR

NOTE:
REINFORCEMENT REQUIRED AT ALL INTERLOCKS.

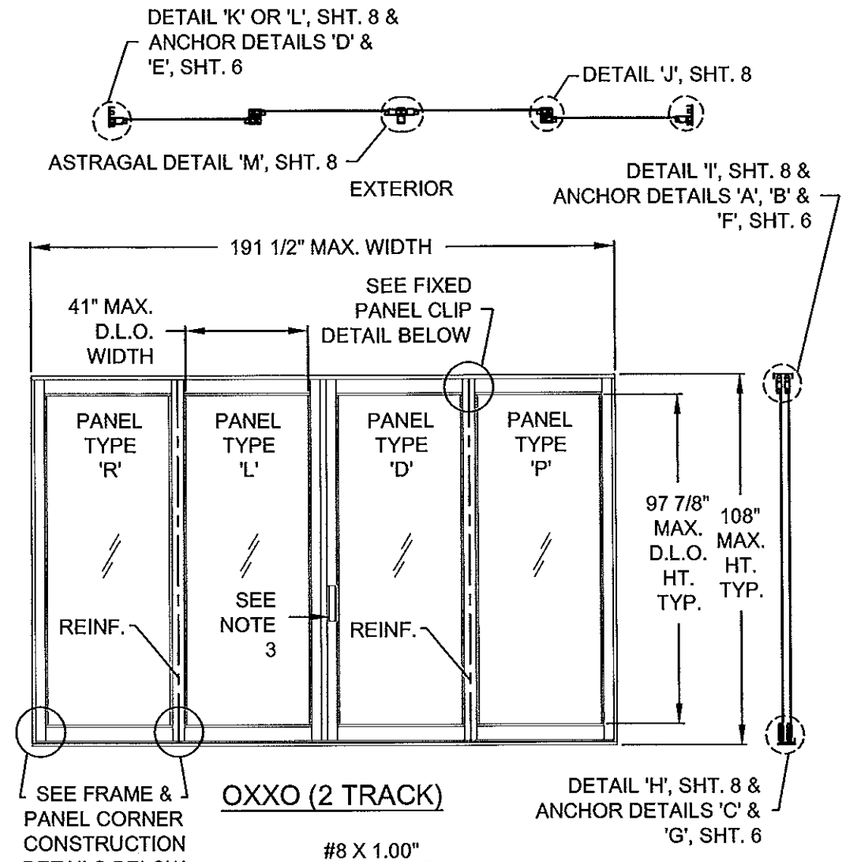

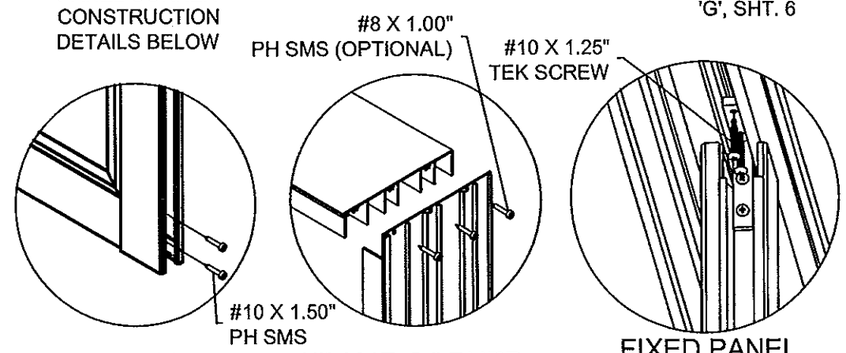

PANEL CORNER DETAIL

FRAME CORNER DETAIL

FIXED PANEL CLIP DETAIL
HEAD SHOWN, SILL APPLICABLE

NOTES:
1. SEE THIS SHEET FOR INDIVIDUAL PANEL CONFIGURATIONS. MAX. NOMINAL PANEL WIDTH = 48". SEE SHT. 8 FOR SECTION DETAILS AND SHTS. 4-6 FOR ANCHORAGE DETAILS.
2. MAX. DLO WIDTH = 41" MAX. MAX. DLO HEIGHT = 97 7/8" MAX.
3. (1) LOCK (ITEMS 75 & 107-110) AT EACH LOCKSTILE, LOCKING INTO KEEPER (ITEM 103) AT FRAME JAMB OR ASTRAGAL.

NOTE:
1. MAXIMUM NOMINAL PANEL WIDTH FOR ALL PANEL CONFIGURATIONS EQUALS 48"

PRODUCT RENEWED
as complying with the Florida Building Code
Acceptance No 15-0106.07
Expiration Date 03/24/2020
By
Miami Dade Product Control

ANTHONY LYNN MILLER
LICENSE
No. 58705
STATE OF FLORIDA
PROFESSIONAL ENGINEER
A. LYNN MILLER, P.E.
P.E.# 58705

Revsd By:	Date:	Revisions:	
J.R.	03/02/15	D	NO CHANGE THIS SHEET
J.J.	10/11/11	C	NO CHANGE THIS SHEET
SMC	02/23/10	B	PER MIAMI DADE COMMENTS
Drawn By: SMC	Date: 08/05/09	Checked By: RJA	Date:

1070 TECHNOLOGY DRIVE
NOKOMIS, FL 34275

P.O. BOX 1529
NOKOMIS, FL 34274

Description: PANEL TYPES / EXAMPLE ELEVATIONS

Title: SERIES 670 H.P. ALUM. SGD - NON-IMPACT

Series/Model:	Scale:	Sheet:	Drawing No.	Rev:
SGD670 H.P.	NTS	7 of 10	PGT0003	D

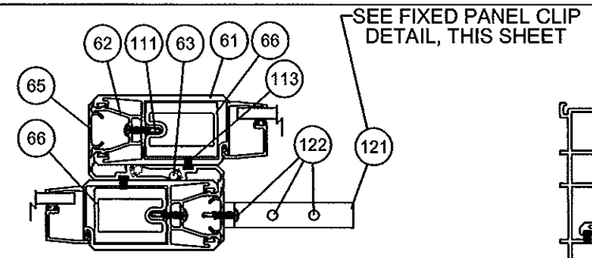

ALL REINFORCED INTERLOCK

DETAIL 'J'

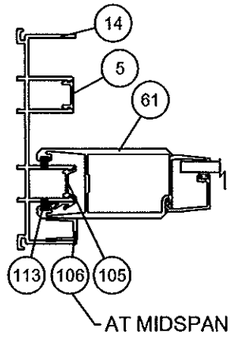

DETAIL 'K' (FIXED PANEL)

INTERIOR
(ALL HORIZ. SECTIONS)
EXTERIOR

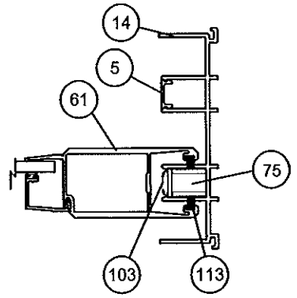

DETAIL 'L'

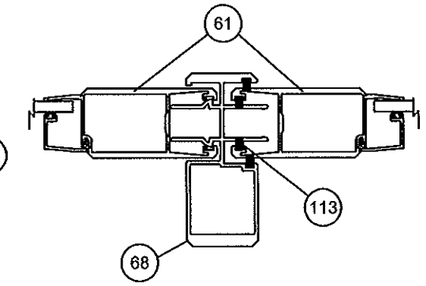

ASTRAGAL

DETAIL 'M'

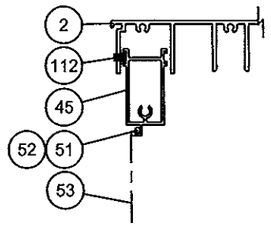

DETAIL 'N' SCREEN AT HEAD

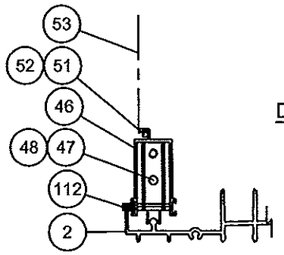

DETAIL 'O' SCREEN AT SILL

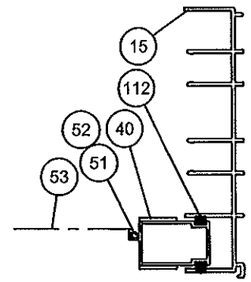

DETAIL 'P' SCREEN AT JAMB

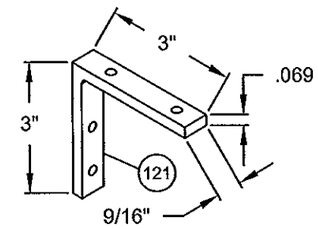

FIXED PANEL CLIP REQ'D AT TOP (HEAD) & BOTTOM (SILL) OF FIXED "O" PANELS. SEE SECTION "J" THIS SHT. & FIXED PANEL CLIP DETAIL ON SHT. 7

SILL RISERS OPTIONS

(SEE D.P. LIMIT TABLE 1A, SHEET 4)

EXTERIOR INTERIOR
(ALL VERT. SECTIONS)

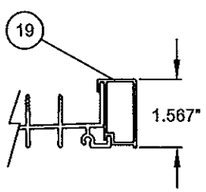

FLUSH BOX SILL RISER

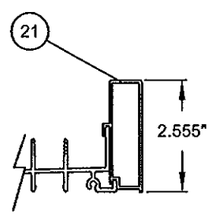

LOW BOX SILL RISER

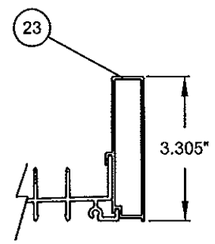

MEDIUM BOX SILL RISER

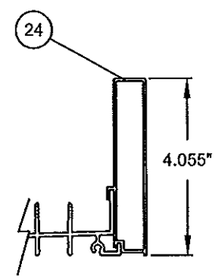

HIGH BOX SILL RISER

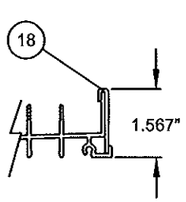

FLUSH FLAT SILL RISER

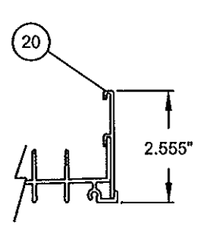

LOW FLAT SILL RISER

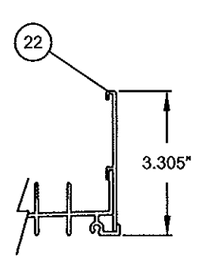

MEDIUM FLAT SILL RISER

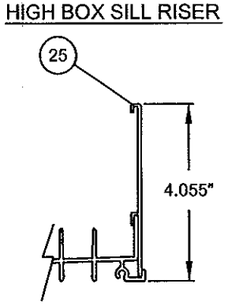

HIGH FLAT SILL RISER

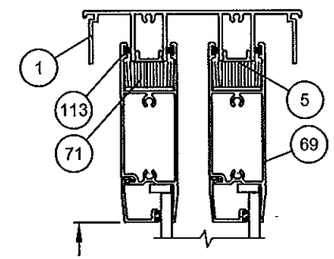

97 7/8" MAX. DLO TYP.

DETAIL 'I'

EXT.

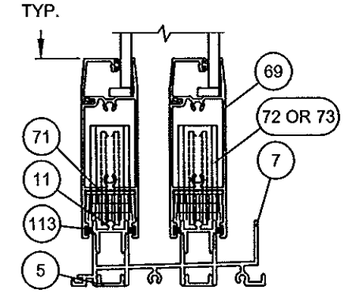

DETAIL 'H'

PRODUCT RENEWED
as complying with the Florida
Building Code 15-0106.07
Acceptance No
Expiration Date 03/24/2020
By
Miami Dade Product Control

ANTHONY LYNN MILLER
LICENSE
No. 58705
3/5/15
STATE OF FLORIDA
PROFESSIONAL ENGINEER
A. LYNN MILLER, P.E.
P.E.# 58705

Revsd By:	Date:	Revisions:	
J.R.	03/02/15	D	ADDED #71 TO DETAILS H & I, AND #113 TO DETAIL J
J.J.	10/11/11	C	NO CHANGE THIS SHEET
SMC	02/23/10	B	PER MIAMI DADE COMMENTS
Drawn By: SMC	Date: 08/05/09	Checked By:	Date:

1070 TECHNOLOGY DRIVE
NOKOMIS, FL 34275

P.O. BOX 1529
NOKOMIS, FL 34274

PGT®

Description: VERTICAL & HORIZONTAL SECTION DETAILS

Title: SERIES 670 H.P. ALUM. SGD - NON-IMPACT

Series/Model:	Scale:	Sheet:	Drawing No.	Rev:
SGD670 H.P.	NTS	8 of 10	PGT0003	D

ITEM	PGT Dwg. #	PGT. #	Description
1	17306	617306	2-TRACK HEAD
2	17303	617303	2-TRACK HEAD WITH SCREEN RAIL
5	17314	617314	FRAME SCREW COVER
6	17317	617317	FRAME HEAD/JAMB ADD-ON
7	17304	617304	2-TRACK SILL
8	17301	617301	2-TRACK SILL WITH SCREEN RAIL
11	17313	617313	FRAME SILL TRACK INSERT
12	17315	617315	FRAME SILL SCREEN ADD-ON
14	17305	617305	2-TRACK JAMB
15	17302	617302	2-TRACK JAMB WITH SCREEN RAIL
18	17322	617322	SILL RISER - 0
19	17319	617319	SILL RISER - 0 HOLLOW
20	17321	617321	SILL RISER - LOW FLAT
21	17318	617318	SILL RISER - LOW HOLLOW
22	17355	617355	SILL RISER - MED FLAT
23	17354	617354	SILL RISER - MED HOLLOW
24	17320	617320	SILL RISER - HIGH HOLLOW
25	17323	617323	SILL RISER - HIGH FLAT

40	4319	612258	SCREEN SIDE RAIL - LOCKSTILE
41		7LOCKWGSK	SCREEN LOCKSET
42		41818	SCREEN KEEPER SPACER SET
43	8152	68152	SCREEN INTERLOCK ADAPTER
44	4428	64428	SCREEN DOUBLE INTERLOCK
45	4317	612256	SCREEN TOP RAIL
46	4318	612257	SCREEN BOTTOM RAIL
47	668	7SRAZ	STANDARD ROLLER
48	668	7SRAX	STANDARD ROLLER - ST. STL.
49	4344	64344	SCREEN ASTRAGAL
50	17349	617349	OXO SCREEN ASTRAGAL ADAPTER
51	1692	61692	SCREEN SPLINE - .165
52	1694	61694	SCREEN SPLINE - .150
53		61816C20	SCREEN CLOTH
54	1725		1/2" x 4" x 1/16" SITTING BLOCK
55	1726		1" X 4" X 1/16" SITTING BLOCK

200		GLASS	3/16 TEMPERED
201		GLASS	1/4 TEMPERED
208		GLASS	IG 3/16-3/16 FULLY TEMPERED
209		GLASS	IG 1/4-1/4 FULLY TEMPERED

ITEM	PGT Dwg. #	PGT. #	Description
61	17326	617326	PANEL STILE (HEAVY DUTY)
62	17327	617327	INTERLOCK ADAPTOR
63	1225	6TP248	VINYL BULB WSTP. - THIN (INSIDE INTERLOCK)
64	1729	71729	SILL END WEATHERSTRIP PAD
65	17328	617328	INTERLOCK SCREW COVER
66	17346	617346	INTERLOCK ALUM REINF. (PANEL - 9")
68	17339	617339	HEAVY DUTY ASTRAGAL
69	17324	617324	TOP & BOTTOM RAIL
70	17350	417350	WEATHERSTRIP EXTENSION (INJECTION MOLDED)
71	1695	71695	1 1/2" X 1" X 3/4" HIGH FIN SEAL DUST PLUGS
72	8153	78153X	TANDEM ST. STL. ROLLER ASSY.
73	8153	78153N	TANDEM NYLON ROLLER ASSY.
74		SILICONE	DOW 899 OR 995
75	8185	78185X	GEMINI MORTICE 3-PLY LOCK W/LONG TRIM PLATE
76		71032X1FPFX	#10-32 X 1" FL. SS SCREW W/ TYPE "F" TIP
77		7103239	10-32 STEEL ZINC U-NUT
78	17358	617358	3/16 & 1/4 OGEE BEAD HORIZONTAL
79	17357	617357	1" IG BEAD HORIZONTAL
82	1224	6TP247K	VINYL BULB WEATHERSTRIP
83		IGTAPE	1/2"X 1/16" SINGLE SIDE ADHESIVE TAPE FOR IG BEAD

100	8052	48052	ROLLER ADJ. HOLE PLUG
101		72087	JAMB BUMPER
102	1696	71696	DUST PLUG
103	8186	78186X	1" KEEPER
104	653	7SDKEEP	SCREEN LOCK KEEPER
105	17344	617344	FIXED PANEL CLIP - 6" LONG
106	17352	617352	EXTERIOR FIXED PANEL RETAINER
107	1739	71739	HANDLE KIT - INTERIOR RAISED WITH THUMB TURN
108	1740	71740	HANDLE KIT - RAISED EXTERIOR HANDLE
109	1731	78162SN	HANDLE KIT - RECESSED INTERIOR WITH THUMB TURN
110	1732	78178	HANDLE KIT - RECESSED EXTERIOR PULL
111		710X34PPSDAX	#10 X 3/4" PH. PN. TEK - S.S.
112	1235	67S16	WSTP, .270 X .170 - FIN SEAL
113	1712	64066	.187 X .230 FINSEAL
114		710X115PPX	#10X 1 1/2"
115		710XPPT	#10X 1"
116		720X1X	#14-20 X 1" ST. STL.
117		720X112X	#14-20 X 1.5" ST. STL.
121	17353		"O" PANEL BRACKET
122			#10 X 1 1/4" TEK SCREW

NOTE: ALL ALUMINUM = 6063-T6

PRODUCT RENEWED
as complying with the Florida
Building Code
Acceptance No 15-0106.07
Expiration Date 03/24/2020
By
Miami Dade Product Control

ANTHONY LYNN MILLER
LICENSE
No. 58705
STATE OF FLORIDA
PROFESSIONAL ENGINEER
3/5/15
A. LYNN MILLER, P.E.
P.E.# 58705

Revsd By:	Date:	Revisions:	
J.R.	03/02/15	D	NO CHANGE THIS SHEET
J.J.	10/11/11	C	NO CHANGE THIS SHEET
SMC	02/23/10	B	PER MIAMI DADE COMMENTS
Drawn By: SMC	Date: 08/05/09	Checked By: RJA	Date:

1070 TECHNOLOGY DRIVE
NOKOMIS, FL 34275

P.O. BOX 1529
NOKOMIS, FL 34274

PGT®

Description: PARTS LIST

Title: SERIES 670 H.P. ALUM. SGD - NON-IMPACT

Series/Model:	Scale:	Sheet:	Drawing No.	Rev:
SGD670 H.P.	NTS	9 of 10	PGT0003	D

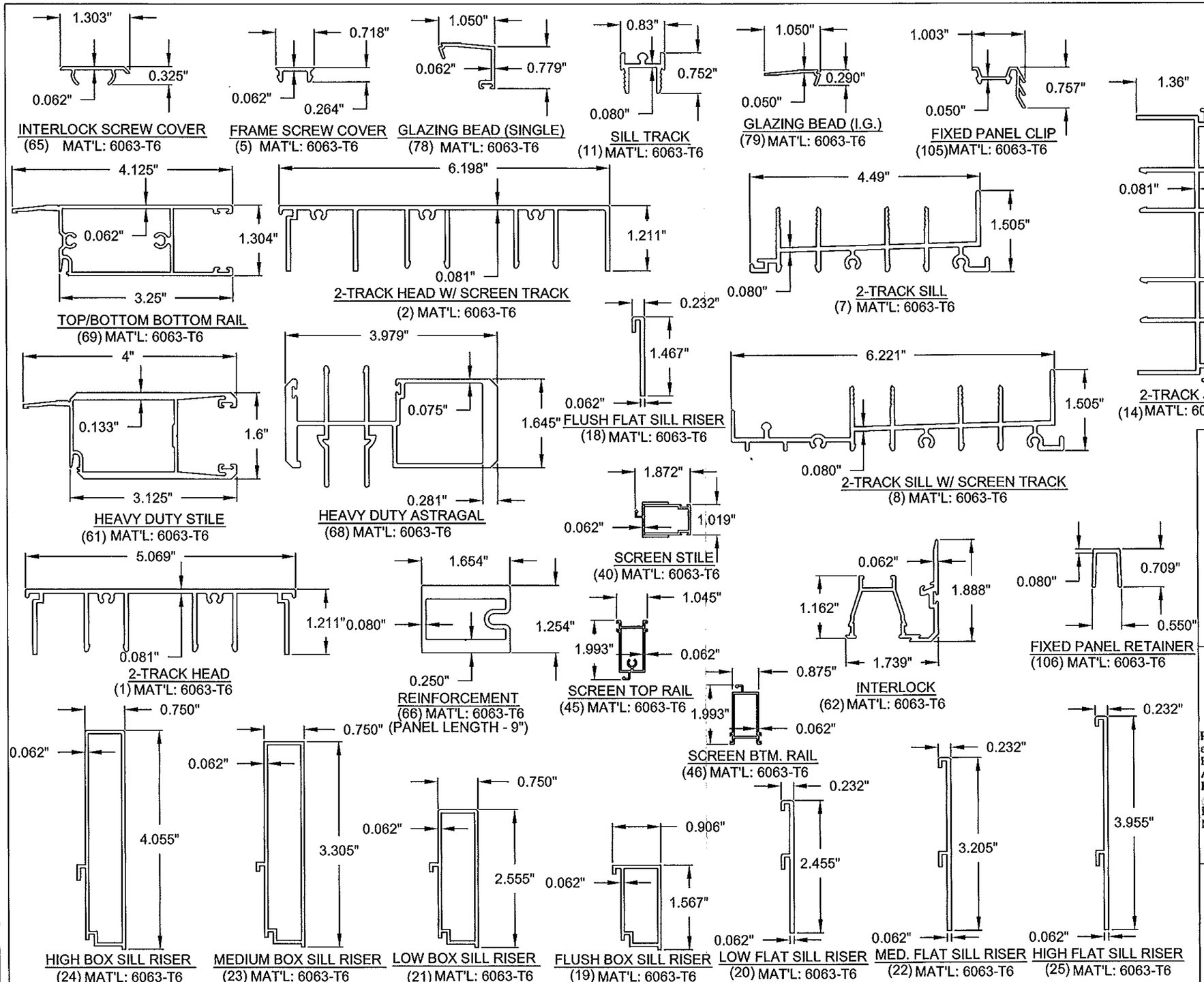

PRODUCT RENEWED
as complying with the Florida
Building Code
Acceptance No 15-0106.07
Expiration Date 03/24/2020
By
Miami Dade Product Control

ANTHONY LYNN MILLER
LICENSE
No. 58705
3/5/15
STATE OF FLORIDA
PROFESSIONAL ENGINEER

A. LYNN MILLER, P.E.
P.E.# 58705

Revsd By:	Date:	Revisions:	
J.R.	03/02/15	D	NO CHANGE THIS SHEET
J.J.	10/11/11	C	NO CHANGE THIS SHEET
SMC	02/23/10	B	PER MIAMI DADE COMMENTS
Drawn By: SMC	Date: 08/05/09	Checked By: RJA	Date:

1070 TECHNOLOGY DRIVE
NOKOMIS, FL 34275

P.O. BOX 1529
NOKOMIS, FL 34274

PGT®

Description: EXTRUSIONS

Title: SERIES 670 H.P. ALUM. SGD - NON-IMPACT

Series/Model:	Scale:	Sheet:	Drawing No.	Rev:
SGD670 H.P.	NTS	10 of 10	PGT0003	D