MIAMI-DADE COUNTY
DEPARTMENT OF REGULATORY AND ECONOMIC RESOURCES (RER)
BOARD AND CODE ADMINISTRATION DIVISION

MIAMI-DADE COUNTY
PRODUCT CONTROL SECTION
11805 SW 26 Street, Room 208
Miami, Florida 33175-2474
T (786) 315-2590 F (786) 315-2599
www.miamidade.gov/economy

NOTICE OF ACCEPTANCE (NOA)

Rollac Shutter of Texas, Inc.
5331 W. Orange Street
Pearland, TX 77581

SCOPE:
This NOA is being issued under the applicable rules and regulations governing the use of construction materials. The documentation submitted has been reviewed and accepted by Miami-Dade County RER-Product Control Section to be used in Miami Dade County and other areas where allowed by the Authority Having Jurisdiction (AHJ).

This NOA shall not be valid after the expiration date stated below. The Miami-Dade County Product Control Section (In Miami Dade County) and/or the AHJ (in areas other than Miami Dade County) reserve the right to have this product or material tested for quality assurance purposes. If this product or material fails to perform in the accepted manner, the manufacturer will incur the expense of such testing and the AHJ may immediately revoke, modify, or suspend the use of such product or material within their jurisdiction. RER reserves the right to revoke this acceptance, if it is determined by Miami-Dade County Product Control Section that this product or material fails to meet the requirements of the applicable building code.

This product is approved as described herein, and has been designed to comply with the High Velocity Hurricane Zone of the Florida Building Code.

DESCRIPTION: "APEX A-55 Slat Engaged Roll-Up Hurricane Abatement System"

APPROVAL DOCUMENT: Drawing No.**12-036**, titled APEX A-55 Slat Engaged Roll-Up Hurricane Abatement sheets 1 through 17 of 17, prepared by Tilteco, Inc., dated February 17, 2012, last revision #1 dated February 17, 2012, signed and sealed by Walter A. Tillit Jr., P.E., bearing the Miami-Dade County Product Control Renewal stamp with the Notice of Acceptance number and expiration date by Miami-Dade County Product Control Section.

MISSILE IMPACT RATING: Large and Small Missile Impact Resistant

LABELING: Each unit shall bear a permanent label with the manufacturer's name or logo, city, state, the following statement: "Miami-Dade County Product Control Approved", and NOA number, per TAS-201, TAS-202, and TAS-203, unless otherwise noted herein.

RENEWAL of this NOA shall be considered after a renewal application has been filed and there has been no change in the applicable building code negatively affecting the performance of this product.

TERMINATION of this NOA will occur after the expiration date or if there has been a revision or change in the materials, use, and/or manufacture of the product or process. Misuse of this NOA as an endorsement of any product, for sales, advertising or any other purposes shall automatically terminate this NOA. Failure to comply with any section of this NOA shall be cause for termination and removal of NOA.

ADVERTISEMENT: The NOA number preceded by the words Miami-Dade County, Florida, and followed by the expiration date may be displayed in advertising literature. If any portion of the NOA is displayed, then it shall be done in its entirety.

INSPECTION: A copy of this entire NOA shall be provided to the user by the manufacturer or its distributors and shall be available for inspection at the job site at the request of the Building Official.
This NOA **renews NOA # 12-0315.12** and consists of this page 1, evidence submitted pages E-1 and E-2 as well as approval document mentioned above.
The submitted documentation was reviewed by **Helmy A. Makar, P.E., M.S.**

MIAMI-DADE COUNTY APPROVED

Helmy A. Makar
02/12/2015

NOA No. 15-0107.05
Expiration Date: 04/28/2020
Approval Date: 02/12/2015

Rollac Shutter of Texas, Inc.

NOTICE OF ACCEPTANCE: EVIDENCE SUBMITTED

1. EVIDENCE SUBMITTED UNDER PREVIOUS APPROVAL # 09-0513.03

A. DRAWINGS

1. *Drawing No. **09-054**, titled APEX A-55 Slat Engaged Roll-Up Hurricane Abatement sheets 1 through 17 of 17, prepared by Tilteco, Inc., dated April 08, 2008, last revision #1 dated March 31, 2010, signed and sealed by Walter A. Tillit Jr., P.E.*

B. TESTS

1. *Test report on Large Missile Impact Test of "4 x 6x 1/4x144 long Aluminum Tube", prepared by Fenestration Testing Laboratory, Inc., Report No. 5894, dated March 4, 2009, signed and sealed by Carlos S. Rionda, P.E.*
2. *Test report on Large Missile Impact Test, Cyclic Wind Pressure Test and Uniform Static Air Pressure Test of "Hurricane Abatement System", prepared by Fenestration Testing Laboratory, Inc., Report No. 5903, dated March 11, 2009, signed and sealed by Carlos S. Rionda, P.E.*

C. CALCULATIONS

1. *Comparative Analysis and Anchor calculation, titled " APEX A-55 Slat end Retention Roll-Up Hurricane Abatement", dated May 06, 2009, Pages 1 through 307 of 307, prepared by Tilteco, Inc., signed and sealed by Walter A. Tillit, P.E.*

D. QUALITY ASSURANCE

1. *By Miami-Dade County Building Code Compliance Office.*

E. MATERIAL CERTIFICATIONS

1. *Tensile Test Report No. 5858, prepared by Fenestration Testing Laboratory, Inc., dated February 03, 2009, signed and sealed by Carlos S. Rionda, P.E.*
2. *Tensile Test Report No. 5858, prepared by Fenestration Testing Laboratory, Inc., dated February 03, 2009, signed and sealed by Carlos S. Rionda, P.E.*

F. STATEMENTS

1. *Letter from Tilteco, Inc., dated May 06, 2009, signed and sealed by Walter A. Tillit Jr., P.E., certifying that the drawing (No. 09-054) prepared for Rollac Shutter of Texas, Inc., is in compliance with the 2007 Edition of the Florida Building Code.*

2. EVIDENCE SUBMITTED UNDER PREVIOUS APPROVAL #12-0315.12

A. DRAWINGS

1. *Drawing No.**12-036**, titled APEX A-55 Slat Engaged Roll-Up Hurricane Abatement sheets 1 through 17 of 17, prepared by Tilteco, Inc., dated February 17, 2012, last revision #1 dated February 17, 2012, signed and sealed by Walter A. Tillit Jr., P.E.*

Helmy A. Makar, P.E., M.S.
Product Control Unit Supervisor
NOA No. 15-0107.05
Expiration Date: 04/28/2020
Approval Date: 02/12/2015

NOTICE OF ACCEPTANCE: EVIDENCE SUBMITTED

B. TESTS

1. None.

C. CALCULATIONS

1. None.

D. QUALITY ASSURANCE

1. By Miami-Dade County Department of Regulatory and Economic Resources (RER).

E. MATERIAL CERTIFICATIONS

1. None.

F. STATEMENTS

1. Letter from Tilteco, Inc., dated March 13, 2012, signed and sealed by Walter A. Tillit Jr., P.E., certifying that the drawing (No. 12-036) prepared for Rollac Shutter of Texas, Inc., is in compliance with the 2010 Edition of the Florida Building Code.

3. NEW EVIDENCE SUBMITTED

A. DRAWINGS

1. None.

B. TESTS

1. None.

C. CALCULATIONS

1. None.

D. QUALITY ASSURANCE

1. By Miami-Dade County Department of Regulatory and Economic Resources.

E. MATERIAL CERTIFICATIONS

1. None.

F. STATEMENTS

1. Letter from Tilteco, Inc., dated December 18, 2014, signed and sealed by Walter A. Tillit Jr., P.E., certifying that the drawing (No. 12-036) prepared for Rollac Shutter of Texas, Inc., is in compliance with the 2010 Edition of the Florida Building Code.

Helmy A. Makar, P.E., M.S.
Product Control Unit Supervisor
NOA No. 15-0107.05
Expiration Date: 04/28/2020
Approval Date: 02/12/2015

GENERAL NOTES:

1. ROLL-UP HURRICANE ABATEMENT SHOWN ON THIS PRODUCT EVALUATION DOCUMENT (P.A.D.) HAS BEEN VERIFIED FOR COMPLIANCE IN ACCORDANCE WITH THE **2007 & 2010** EDITIONS OF THE FLORIDA BUILDING CODE. THIS PRODUCT MAY BE INSTALLED AT HIGH VELOCITY HURRICANE ZONES.
   DESIGN WIND LOADS SHALL BE DETERMINED AS PER SECTIONS **1620** OF THE ABOVE MENTIONED CODES, USING ASCE 7-05 STANDARD FOR INSTALLATIONS UNDER 2007 FBC & ASCE 7-10 FOR INSTALLATIONS UNDER 2010 FBC AND SHALL NOT EXCEED THE MAXIMUM (A.S.D.) DESIGN PRESSURE RATINGS INDICATED ON SHEETS 10, 11 & 15 THRU 17.
   IN ORDER TO VERIFY THE ABOVE CONDITION, ULTIMATE DESIGN WIND LOADS DETERMINED PER ASCE 7-10 SHALL BE FIRST REDUCED TO A.S.D. DESIGN WIND LOADS BY MULTIPLYING THEM BY 0.6 IN ORDER TO COMPARE THESE W/ MAX. (A.S.D.) DESIGN PRESSURE RATINGS INDICATED ON SHEETS 10, 11 & 15 THRU 17.
   IN ORDER TO VERIFY THAT COMPONENTS AND ANCHORS ON THIS P.A.D. AS TESTED WERE NOT OVER STRESSED, A 33% INCREASE IN ALLOWABLE STRESS FOR WIND LOADS WAS **NOT** USED IN THEIR ANALYSIS. FASTENERS SPACING TO WOOD HAS BEEN DETERMINED IN ACCORDANCE WITH N.D.S. 2005.

   ROLL-UP HURRICANE ABATEMENT ADEQUACY FOR IMPACT AND FATIGUE RESISTANCE HAS BEEN VERIFIED IN ACCORDANCE WITH SECTION **1626** OF THE ABOVE MENTIONED CODE AS PER FENESTRATION TESTING LAB. REPORTS # 5903 & 5894 AS PER TAS-201, TAS-202 AND TAS-203 PROTOCOLS. SEE *, Δ NOTES ON SHEETS 12 & 16 FOR ADDITIONAL LIMITATIONS.

2. ALL ALUMINUM EXTRUSIONS SHALL BE AS INDICATED ON SHEET 2.

3. EVERY OTHER SLAT SHALL INCLUDE WIND LOCKS AT EACH END (SEE COMPONENTS SHEET). EVERY SLAT (A) ADJACENT AND ABOVE BOTTOM SLAT (A1) MUST INCLUDE WIND LOCKS.

4. ALL SCREWS (EXCEPT COMPONENT (C1)) TO BE STAINLESS STEEL 304 OR 316 SERIES WITH 50 ksi YIELD STRENGTH AND 90 ksi TENSILE STRENGTH OR CORROSION RESISTANT COATED CARBON STEEL AS PER DIN 50018. ALL S.D.S. ARE TEK SCREWS MANUFACTURED BY ITW BUILDEX & SHALL COMPLY W/ FLORIDA BUILDING CODE SECTION 2411.3.3.4.

5. BOLTS TO BE ASTM A-307, GALVANIZED OR AISI 304 OR 316 SERIES STAINLESS STEEL WITH 36 ksi MINIMUM YIELD STRENGTH.

6. ANCHORS TO WALL FOR (B1), (B2), (B3) & (B4) SIDE RAILS SHALL BE AS FOLLOWS: (UNLESS OTHERWISE NOTED)

   (A) TO EXISTING POURED CONCRETE: MIN. f'c = 2899 p.s.i.-COMPRESSIVE STRENGTH.

   -5/16"ø CARBON STEEL TAPCON XL ANCHORS AS MANUFACTURED BY ITW BUILDEX, INC.

   A.1) MINIMUM EMBEDMENT OF TAPCON XL ANCHORS INTO POURED CONCRETE SHALL BE 2 1/4". NO EMBEDMENT INTO STUCCO SHALL BE CONSIDERED AS PART OF THE REQUIRED EMBEDMENT.

   A.2) MINIMUM EDGE DISTANCE (E.D.) OF TAPCON XL ANCHORS INTO POURED CONCRETE SHALL BE 4". EDGE DISTANCE IS BEYOND ANY FINISH MATERIAL.

   A.3) IN CASE THAT PRECAST STONE, PRECAST CONCRETE OR BRICK PANELS, VENEER OR PAVERS BE FOUND ON THE EXISTING WALL, ANCHORS SHALL BE LONG ENOUGH TO REACH THE MAIN SUBSTRATE BEHIND SUCH PANELS. MINIMUM EMBEDMENT SHALL BE AS INDICATED ON NOTE A.1 ABOVE.

   (B) TO EXISTING GROUT FILLED CELL CONCRETE BLOCK WALL: ASTM C-90

   -5/16"ø CARBON STEEL TAPCON XL ANCHORS, AS MANUFACTURED BY ITW BUILDEX, INC.

   B.1) MINIMUM EMBEDMENT OF TAPCON XL ANCHORS, INTO THE GROUT FILLED CELL CONCRETE BLOCK UNIT SHALL BE 2 1/4". NO EMBEDMENT INTO STUCCO SHALL BE CONSIDERED AS PART OF THE REQUIRED EMBEDMENT.

   B.2) MINIMUM EDGE DISTANCE (E.D.) OF TAPCON XL ANCHORS INTO GROUT FILLED CELL CONCRETE BLOCK SHALL BE 4". EDGE DISTANCE IS BEYOND ANY FINISH MATERIAL

   B.3) IN CASE THAT PRECAST STONE, PRECAST CONCRETE OR BRICK PANELS, VENEER OR PAVERS BE FOUND ON THE EXISTING WALL, ANCHORS SHALL BE LONG ENOUGH TO REACH THE MAIN SUBSTRATE BEHIND SUCH PANELS. MINIMUM EMBEDMENT SHALL BE AS INDICATED ON NOTE B.1 ABOVE.

   (C) TO EXISTING WOOD FRAME BUILDING: SOUTHERN PINE #2 W/ G=0.55 MIN., DOUGLAS FIR-SOUTH (G=0.46) OR SPRUCE PINE-FIR SOUTH, (G=0.36).

   -5/16"ø CARBON STEEL ULTRACON ANCHORS, AS MANUFACTURED BY ELCO CONSTRUCTION PRODUCTS.

   C.1) MINIMUM PENETRATION OF ULTRACON ANCHORS, INTO THE WOOD FRAME UNIT SHALL BE 2 1/2". (MUST INCLUDE 2" THREADED LENGTH) NO PENETRATION INTO STUCCO SHALL BE CONSIDERED AS PART OF THE REQUIRED PENETRATION.

   C.2) MINIMUM EDGE DISTANCE (E.D.) OF ULTRACON ANCHORS, INTO WOOD SHALL BE 2". EDGE DISTANCE IS BEYOND ANY FINISH MATERIAL

   C.3) IN CASE THAT PRECAST STONE, PRECAST CONCRETE OR BRICK PANELS, VENEER OR PAVERS BE FOUND ON THE EXISTING WALL, ANCHORS SHALL BE LONG ENOUGH TO REACH THE MAIN SUBSTRATE BEHIND SUCH PANELS. MINIMUM THREADED PENETRATION SHALL BE AS INDICATED ON NOTE C.1 ABOVE.

7. ANCHORS SHALL BE INSTALLED FOLLOWING ALL OF THE RECOMMENDATIONS AND SPECIFICATIONS OF THE ANCHOR'S MANUFACTURER.

8. ANCHORS REQUIRED FOR MULLION CONNECTIONS SHALL BE AS SPECIFIED ON APPLICABLE SECTIONS SHOWN ON SHEETS **13 & 14** RESPECTIVELY.

   -1/2"ø & 5/8" KWIK BOLT TZ EXPANSION ANCHOR TO BE AS MANUFACTURED BY HILTI, INC.

   MINIMUM EDGE DISTANCE AND SPACING FOR ABOVE MENTIONED ANCHORS SHALL BE AS INDICATED BELOW OR AT ABOVE MENTIONED SHEET. EDGE DISTANCE AND EMBEDMENTS ARE BEYOND ANY FINISH MATERIAL.

ANCHOR	SPACING @ 100%	EDGE DISTANCE @ 100%	EMBEDMENT	
			CONCRETE	GROUT FILLED OR CONCRETE BLOCK
1/2"	22 1/2"	7 1/2"	4" (3000 psi)	--
5/8"	20 1/4"	6 3/4"	6 3/4" (3000 psi)	--

9. APEX A-55 SLATS FOAM PLASTIC CORE SHALL CONSIST OF 100/100 PARTS BY WEIGHT OF ELASTOPOR R P 12041 R (1.06 SPACIFIC GRAVITY) RESIN + ELASTOPOR R P1001 U (1.22 SPECIFIC GRAVITY) ISOCYANATE, AS MANUFACTURED BY BASF CORPORATION, 1609 BIDDLE AVE., WYANDOTTE, MI 48192.
   SLATS FOAM PLASTIC CORE SURFACE BURNING CHARACTERISTICS HAVE BEEN VERIFIED IN ACCORDANCE WITH SECTION 2612.3 OF THE FLORIDA BUILDING CODE AS PER CELOTEX CORPORATION TEST REPORTS #520274A & 520536 RESPECTIVELY.

10. ROLL-UP MECHANISM NOT PART OF THIS APPROVAL, BUT SHALL BE CERTIFIED BY AN INDEPENDENT TESTING AGENCY.

11. IT SHALL BE THE RESPONSIBILITY OF THE CONTRACTOR TO VERIFY THE SOUNDNESS OF THE STRUCTURE WHERE PRODUCT IS TO BE ATTACHED TO INSURE PROPER ANCHORAGE. THIS PRODUCT SHALL ONLY BE ATTACHED TO CONCRETE, GROUT FILLED CELL CONCRETE BLOCK OR WOOD FRAME BUILDINGS.

12. THIS PRODUCT INSTALLATION SHALL COMPLY WITH SPECS INDICATED IN THIS DRAWING PLUS ANY BUILDING AND ZONING REGULATIONS PROVIDED BY THE JURISDICTION WHERE PERMIT IS APPLIED TO.

13. THE INSTALLATION CONTRACTOR IS TO SEAL/CAULK ALL PRODUCT COMPONENT EDGES WHICH REMAIN IN CONTINUOUS CONTACT WITH THE BUILDING TO PREVENT WIND/RAIN INTRUSION. CAULK AND SEAL PRODUCT TRACKS ALL AROUND FULL LENGTH.

14. (a) THIS P.A.D. PREPARED BY THIS ENGINEER IS GENERIC AND DOES NOT PROVIDE INFORMATION FOR A SITE SPECIFIC PROJECT; i.e. WHERE THE SITE CONDITIONS DEVIATE FROM THE P.A.D.

    (b) CONTRACTOR TO BE RESPONSIBLE FOR THE SELECTION, PURCHASE AND INSTALLATION INCLUDING LIFE SAFETY OF THIS PRODUCT, BASED ON THIS P.A.D. PROVIDED HE/SHE DOES NOT DEVIATE FROM THE CONDITIONS DETAILED ON THIS DOCUMENT. CONSTRUCTION SAFETY AT SITE IS THE CONTRACTOR'S RESPONSIBILITY.

    (c) THIS P.A.D. WILL BE CONSIDERED INVALID IF ALTERED BY ANY MEANS.

    (d) SITE SPECIFIC PROJECTS SHALL BE PREPARED BY A REGISTERED ENGINEER OR ARCHITECT WHICH WILL BECOME THE ENGINEER OF RECORD (E.O.R.) FOR THE PROJECT AND WHO WILL BE RESPONSIBLE FOR THE PROPER USE OF THE P.A.D. ENGINEER OF RECORD, ACTING AS A DELEGATED ENGINEER TO THE P.A.D. ENGINEER, SHALL SUBMIT TO THIS LATTER THE SITE SPECIFIC DRAWINGS FOR REVIEW.

    (e) THIS P.A.D. SHALL BEAR THE DATE AND ORIGINAL SEAL AND SIGNATURE OF THE PROFESSIONAL ENGINEER OF RECORD THAT PREPARED IT.

15. A PERMANENT SHUTTER MANUFACTURER'S LABEL SHALL BE PLACED ON THE EXPOSED SURFACE OF THE SIDE RAIL APPROXIMATELY 4" BELOW THE TOP OF SUCH RAIL
    LABEL SHALL READ AS FOLLOWS:
    ROLLAC SHUTTER OF TEXAS, INC.
    MIAMI, FLORIDA
    MIAMI-DADE COUNTY PRODUCT CONTROL APPROVED

PRODUCT RENEWED
as complying with the Florida Building Code
Acceptance No 15-0107.05
Expiration Date 04/28/2020
By
Miami Dade Product Control

PRODUCT REVISED
as complying with the Florida Building Code
Acceptance No 12-0315.12
Expiration Date 04/28/2015
By
Miami Dade Pr

MIAMI-DADE COUNTY

WALTER A. TILLIT JR. LICENSE No. 44167 STATE OF FLORIDA PROFESSIONAL ENGINEER

SEAL/SIGNATURE & DATE

© 2012 TILTECO INC.

TILTECO INC.
TILLIT TESTING & ENGINEERING COMPANY
6355 N.W. 36th. St., Ste. 303 – VIRGINIA GARDENS, FL 33166
Phone : (305) 871-1530 ; Fax : (305) 871-1531
e-mail: tilteco@aol.com
EB-0006719
WALTER A. TILLIT Jr., P.E.
FLORIDA Lic. # 44167

FLORIDA BUILDING CODE. (High Velocity Hurricane Zone)

APEX A-55 SLAT ENGAGED ROLL-UP HURRICANE ABATEMENT

ROLLAC SHUTTER OF TEXAS, INC.
5331 ORANGE STREET
PEARLAND, TX. 77581
PHONE: (800) 880-0922 FAX: (281) 485-0839

REV. No	DESCRIPTION	DATE	REV. No	DESCRIPTION	DATE
1	OLD 09-054	02/17/12	3		
2			4		

DRAWN BY: I.A./A.G.
02/17/12 DATE
12-036 DRAWING No
SHEET 1 OF 17

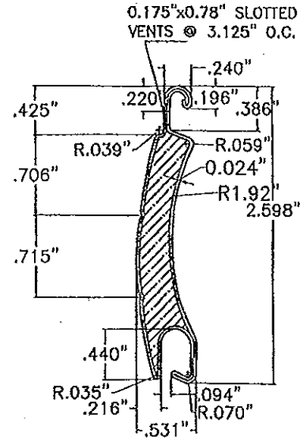

(A) SLAT:

APEX A-55 SLAT
HIGH DENSITY FOAM PLASTIC CORE
SHEET METAL ALUMINUM SLAT
3005-H28 ALUMINUM ALLOY
(Ftu = 29.5 ksi, Fy = 25.7 ksi, AFTER ROLLED)
SCALE: 3/4" = 1"

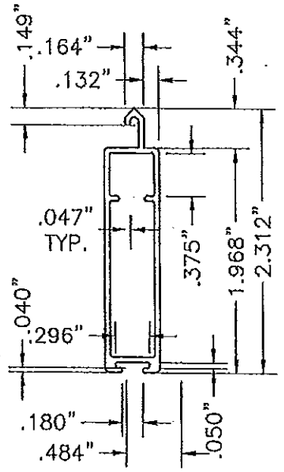

(A1) BOTTOM SLAT:

6063-T6 ALUMINUM ALLOY
SCALE: 3/4" = 1"

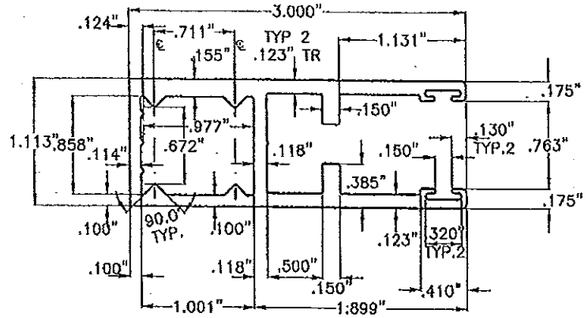

(B1) TYPE 1 SIDE RAIL

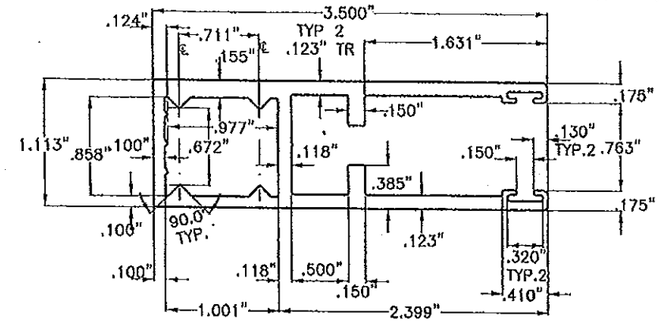

(B3) TYPE 3 SIDE RAIL

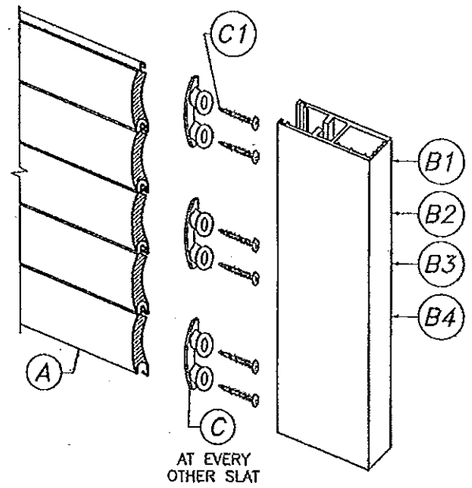

APEX A-55 SLAT ASSEMBLY DETAIL:

N.T.S.

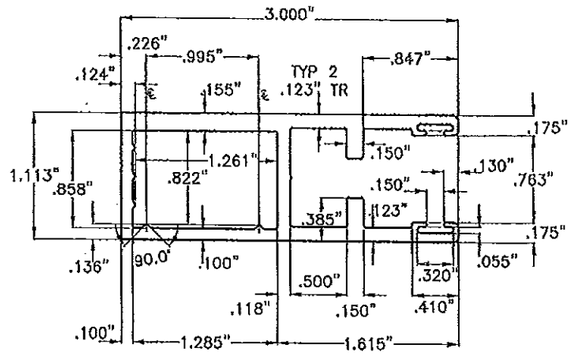

(B2) TYPE 2 SIDE RAIL

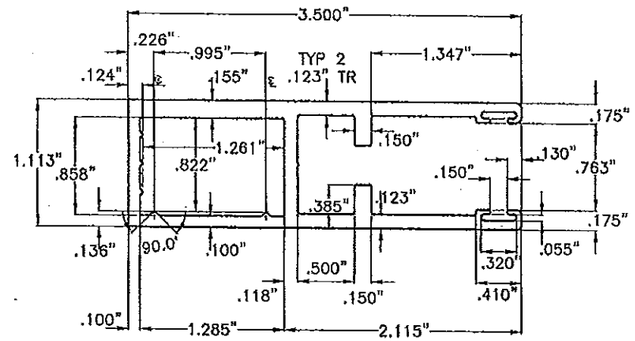

(B4) TYPE 4 SIDE RAIL

SIDE RAILS:

6005-T5 ALUMINUM ALLOY
SCALE: 3/4" = 1"

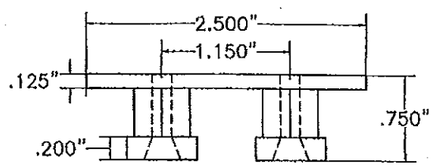

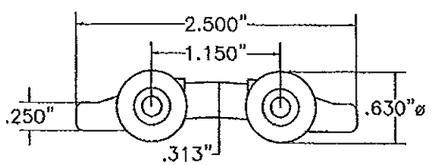

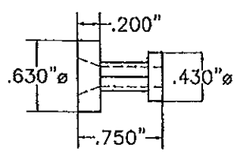

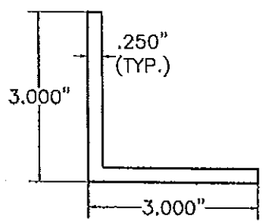

(D) ALUMINUM ANGLE

6063-T6 ALUMINUM ALLOY
SCALE: 3/8" = 1"

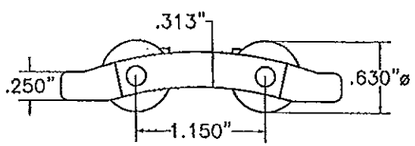

(C) WIND LOCK:

RIGID NYLON Ftu = 5001 psi.
SCALE: 3/4" = 1"

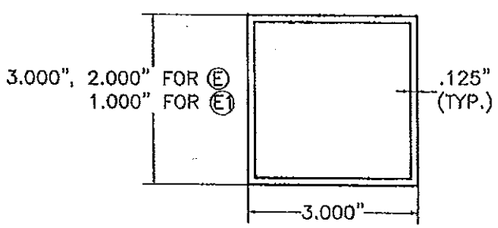

(E), (E1) ALUMINUM BUILD-OUT TUBES

6063-T6 ALUMINUM ALLOY
SCALE: 3/8" = 1"

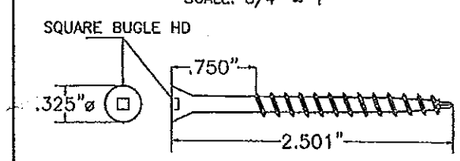

(C1) WIND LOCK SCREW:

(2) #8-10 X 2 1/2" AISI 305 SERIES F.H. S.S. S.D.S.
(MIN. Fy = 72.8 ksi, Ftu = 83.1 ksi)
SCALE: 3/4" = 1"

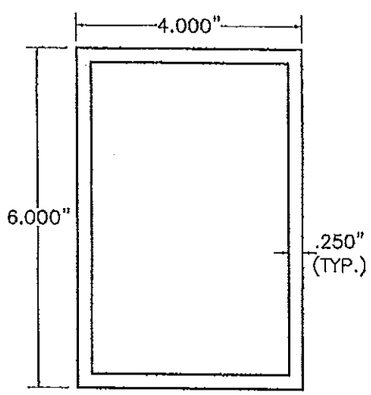

(F) TYPE 1 MULLION

6061-T6 ALUMINUM ALLOY
SCALE: 3/8" = 1"

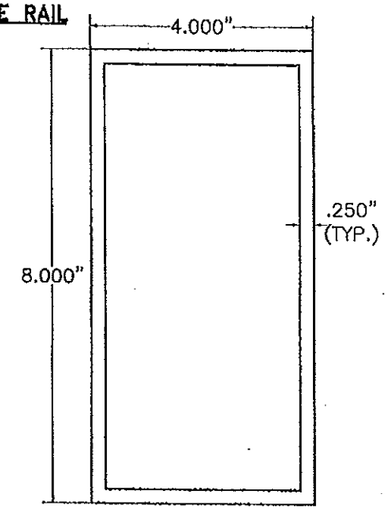

(G) TYPE 2 MULLION

6061-T6 ALUMINUM ALLOY
SCALE: 3/8" = 1"

PRODUCT RENEWED
as complying with the Florida
Building Code
Acceptance No 15-0107.05
Expiration Date 04/28/2020
By
Miami Dade Product Control

PRODUCT REVISED
as complying with the Florid.
Building Code
Acceptance No 12-0315.12
Expiration Date 04/28/2015
By
Miami Dade Product Control

FLORIDA BUILDING CODE. (High Velocity Hurricane Zone)

MIAMI-DADE COUNTY

WALTER A. TILLIT JR. LICENSE No. 44167 STATE OF FLORIDA PROFESSIONAL ENGINEER

P.E. SEAL/SIGNATURE/DATE

© 2012 TILTECO INC.

TILTECO INC.
TILLIT TESTING & ENGINEERING COMPANY
6395 N.W. 38th. St. Ste. 305 - VIRGINIA GARDENS, FL 33166
Phone : (305) 871-1530 , Fax : (305) 871-1531
e-mail: tilteco@aol.com
EB-0006719
WALTER A. TILLIT Jr., P.E.
FLORIDA Lic. # 44167

APEX A-55 SLAT ENGAGED ROLL-UP HURRICANE ABATEMENT

ROLLAC SHUTTER OF TEXAS, INC.
5331 ORANGE STREET
PEARLAND, TX. 77581
PHONE: (800) 880-0922 FAX: (281) 485-0839

REV. No	DESCRIPTION	DATE	REV. No	DESCRIPTION	DATE
1	OLD 09-054	02/17/12	3		
2			4		

DRAWN BY: I.A./A.G.
02/17/12 DATE
12-036 DRAWING No
SHEET 2 OF 17

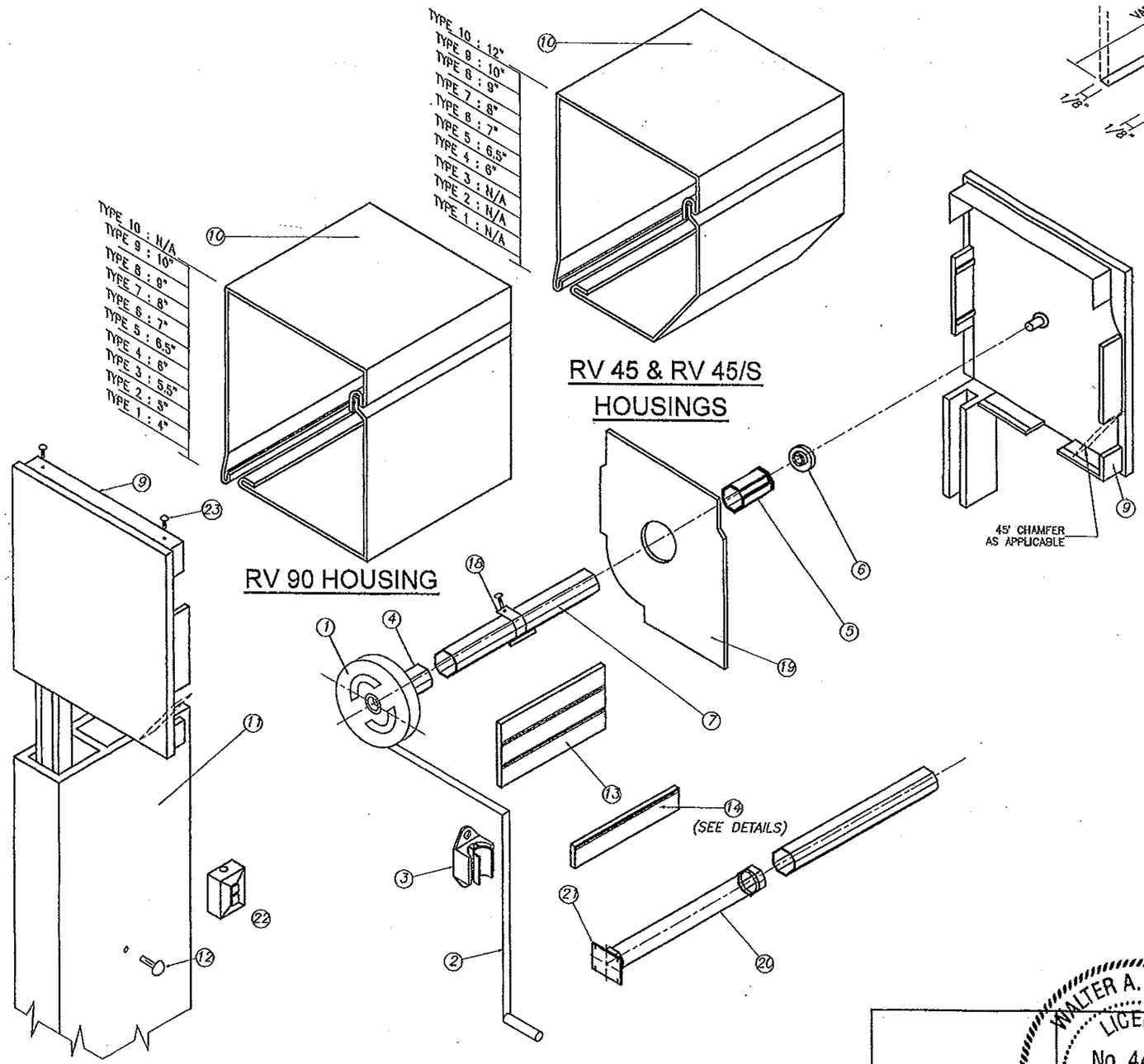

(H) BOX COMPONENTS AND ASSEMBLY DETAIL

END CAP SYSTEM

(SEE NOTE 10 ON SHEET 1)

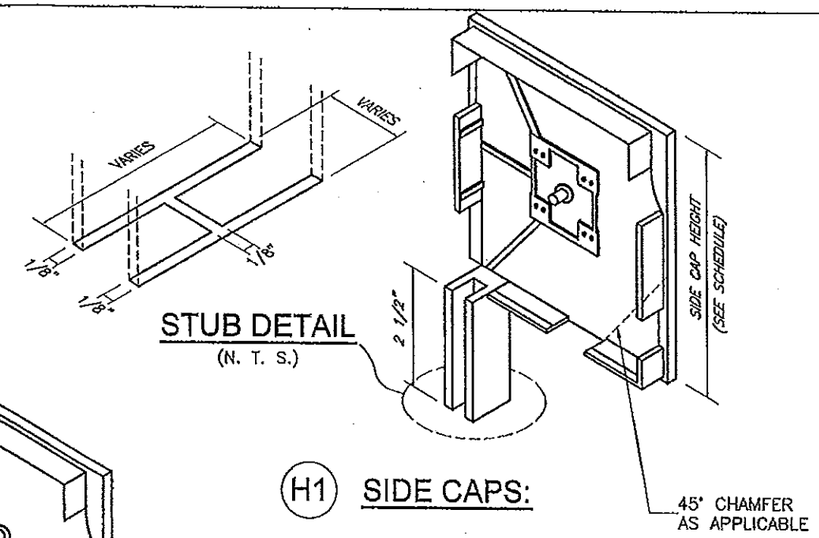

(H1) SIDE CAPS:

COMPONENTS FOR GEAR OPERATED SYSTEM

1 – GEAR
2 – UNIVERSAL & CRANK
3 – CRANK HOLDER(OPTIONAL)
4 – GEAR INSERT(GEAR TO AXLE CONNECTOR)
5 – IDLER INSERT
6 – BALL BEARING
7 – OCTAGONAL AXLE *
9 – SIDE/END CAP *
10 – HOUSING(FRONT & BOTTOM), 0.040" THICK
11 – SIDE RAIL
12 – PLUG–BUTTOMS
13 – ALUMINUM SLATS
14 – BASE SLAT
15 – PLASTIC STOPS(OPTIONAL)
16 – SIDE LOCKS(OPTIONAL)
17 – STAPLES(OPTIONAL)
18 – SPRINGLOCK HANGER
19 – SAFETY PLATES

ADDITIONAL COMPONENTS FOR MOTORIZED OPERATED SYSTEM

20 – TUBULAR MOTOR
21 – MOTOR BRACKET
22 – SWITCH

FASTENERS

23 – 3/16" ALUMINUM POP RIVETS(6 REQ'D EA. SIDE CAP) : 2 @ TOP, 2 @ REAR, 2@ BOTTOM

* SHALL BE CAPABLE TO SUSTAIN SLAT'S WEIGHT AND ASSURE LIFTING MECHANISM (SEE NOTE 10/1)

PRODUCT RENEWED
as complying with the Florida Building Code
Acceptance No 15-0107.05
Expiration Date 04/28/2020
By
Miami Dade Product Control

PRODUCT REVISED
as complying with the Florida Building Code
Acceptance No 12-0315.12
Expiration Date 04/28/2015
By
Miami Dade Product Control

FLORIDA BUILDING CODE. (High Velocity Hurricane Zone)

MIAMI-DADE COUNTY

WALTER A. TILLIT JR. LICENSE No. 44167 STATE OF FLORIDA PROFESSIONAL ENGINEER

PROFESSIONAL SIGNATURE/DATE

© 2012 TILTECO INC.

TILTECO INC.
TILLIT TESTING & ENGINEERING COMPANY
8055 N.W. 36th. St., Ste. 303 – VIRGINIA GARDENS, FL 33166
Phone : (305) 871-1830 , Fax : (305) 871-1831
e-mail: tilteco@aol.com
EB-0006719
WALTER A. TILLIT Jr., P.E.
FLORIDA Lic. # 44167

APEX A-55 SLAT ENGAGED ROLL-UP HURRICANE ABATEMENT

ROLLAC SHUTTER OF TEXAS, INC.
5331 ORANGE STREET
PEARLAND, TX. 77581
PHONE: (800) 880-0922 FAX: (281) 485-0839

REV. No	DESCRIPTION	DATE	REV. No	DESCRIPTION	DATE
1	OLO 09-054	02/17/12	3		
2			4		

DRAWN BY: I.A./A.G.
02/17/12 DATE
12-036 DRAWING No
SHEET 3 OF 17

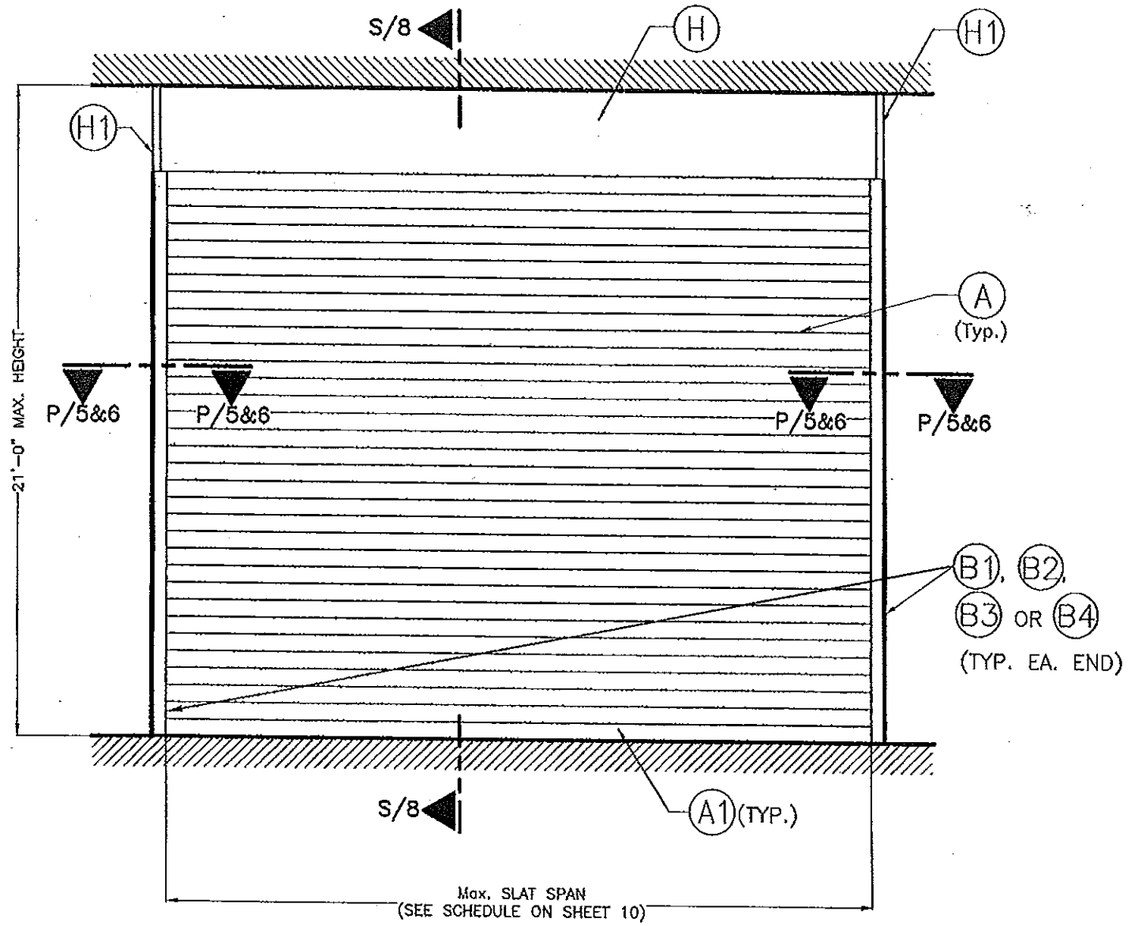

TYPICAL SINGLE UNIT ELEVATION: INSTALLATION INTO POURED CONCRETE, GROUT FILLED CELL CONCRETE BLOCK & WOOD

NOTES: SEE SHEETS 2 & 3 FOR COMPONENTS NOMENCLATURE.
N.T.S

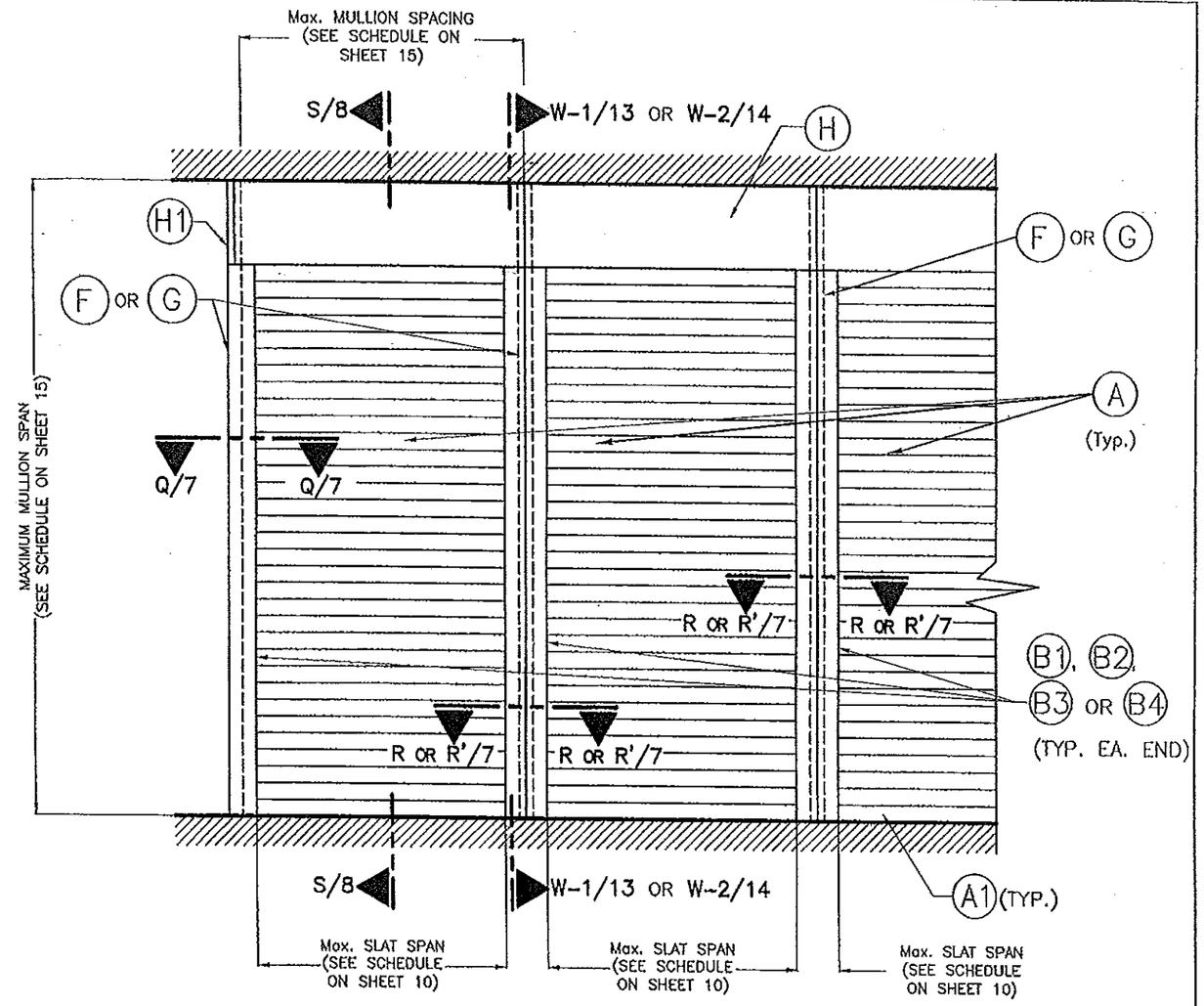

TYPICAL CONSECUTIVE SINGLE UNIT ELEVATION W/ MULLIONS: INSTALLATION INTO POURED CONCRETE

NOTES: SEE SHEETS 2 & 3 FOR COMPONENTS NOMENCLATURE.
N.T.S

PRODUCT RENEWED
as complying with the Florida
Building Code
Acceptance No 15-0107.05
Expiration Date 04/28/2020
By
Miami Dade Product Control

PRODUCT REVISED
as complying with the Florida
Building Code
Acceptance No 12-0315.12
Expiration Date 04/28/2015
By
Miami Dade Product Control

FLORIDA BUILDING CODE. (High Velocity Hurricane Zone)

MIAMI-DADE COUNTY

WALTER A. TILLIT JR. LICENSE No. 44167 STATE OF FLORIDA PROFESSIONAL ENGINEER
REG. SEAL/SIGNATURE/DATE

© 2012 TILTECO INC.

TILTECO INC.
TILLIT TESTING & ENGINEERING COMPANY
6205 N.W. 36th St., Ste. 305 – VIRGINIA GARDENS, FL 33166
Phone : (305) 871-1530 , Fax : (305) 871-1531
e-mail: tilteco@aol.com
EB-0008719
WALTER A. TILLIT Jr., P.E.
FLORIDA Lic. # 44167

APEX A-55 SLAT ENGAGED ROLL-UP HURRICANE ABATEMENT

ROLLAC SHUTTER OF TEXAS, INC.
5331 ORANGE STREET
PEARLAND, TX. 77581
PHONE: (800) 880-0922 FAX: (281) 485-0839

REV. No	DESCRIPTION	DATE	REV. No	DESCRIPTION	DATE
1	OLD 09-054	02/17/12	3		
2			4		

DRAWN BY: I.A./A.G.
02/17/12 DATE
12-036 DRAWING No
SHEET 4 OF 17

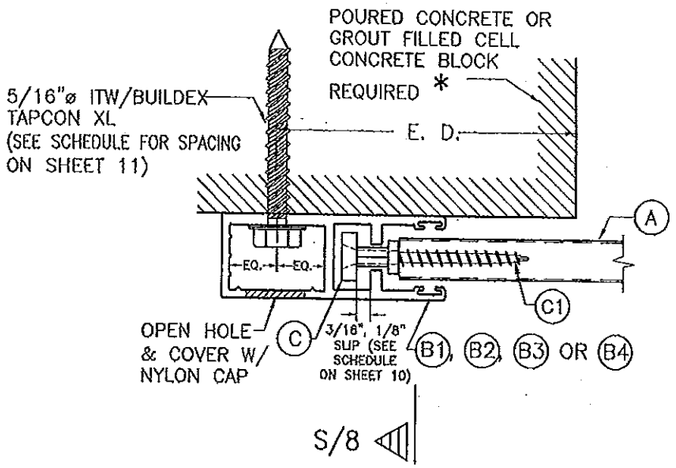

SECTION P – P (1) : WALL MOUNT

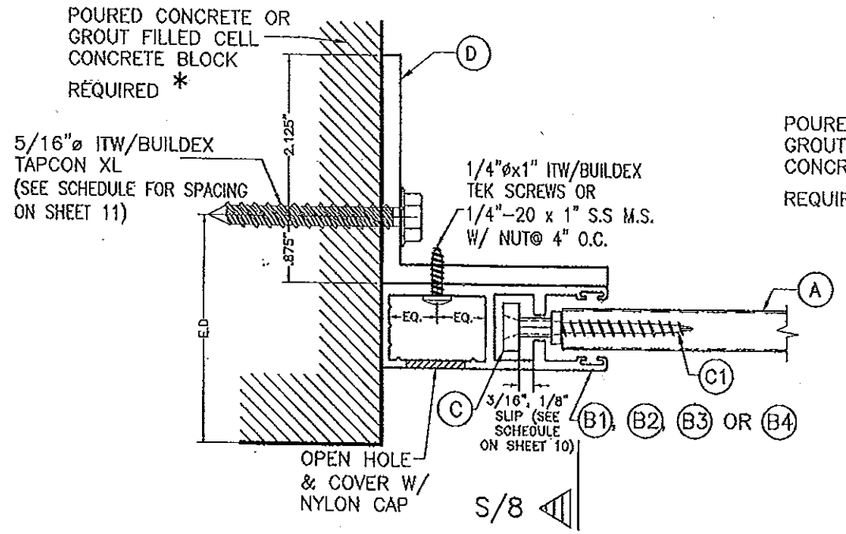

SECTION P – P (2) : INSIDE WALL MOUNT

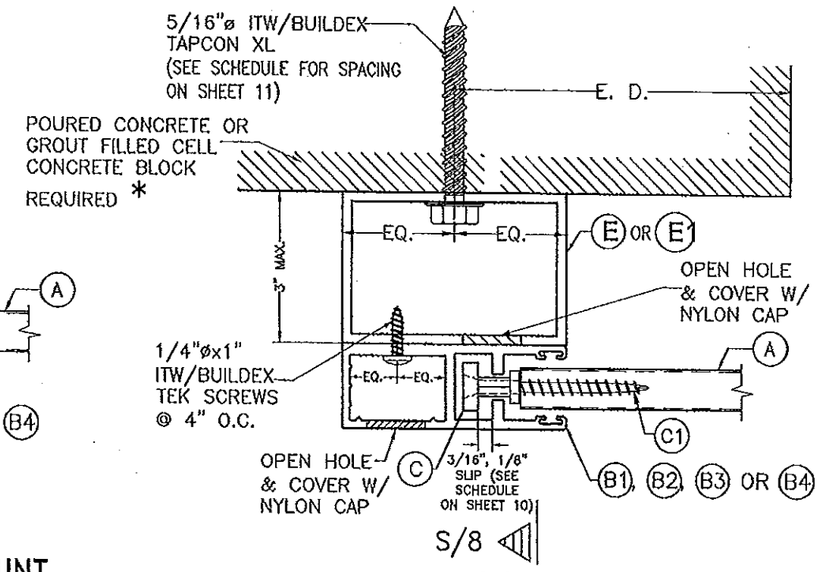

SECTION P – P (3) : BUILD-OUT MOUNT

SIDE RAIL CONNECTIONS TO POURED CONCRETE OR GROUT FILLED CELL CONCRETE BLOCK WALL

SCALE: 1/2" = 1"

PRODUCT RENEWED
as complying with the Florida
Building Code
Acceptance No 15-0107.05
Expiration Date 04/28/2020
By
Miami Dade Product Control

PRODUCT REVISED
as complying with the Florida
Building Code
Acceptance No 12-0315.12
Expiration Date 04/28/2015
By
Miami Dade Product Control

FLORIDA BUILDING CODE. (High Velocity Hurricane Zone)

MIAMI-DADE COUNTY

WALTER A. TILLIT JR. LICENSE No. 44167 STATE OF FLORIDA PROFESSIONAL ENGINEER

PE SEAL / SIGNATURE / DATE

© 2012 TILTECO INC.

TILTECO INC.
TILLIT TESTING & ENGINEERING COMPANY
9355 N.W. 38th. St., Ste. 305 – VIRGINIA GARDENS, Fl. 33166
Phone : (305) 871-1530 , Fax : (305) 871-1531
e-mail: tilteco@aol.com
EB-0008719
WALTER A. TILLIT Jr., P.E.
FLORIDA Lic. # 44167

APEX A-55 SLAT ENGAGED ROLL-UP HURRICANE ABATEMENT

ROLLAC SHUTTER OF TEXAS, INC.
5331 ORANGE STREET
PEARLAND, TX. 77581
PHONE: (800) 880-0922 FAX: (281) 485-0839

REV. No	DESCRIPTION	DATE	REV. No	DESCRIPTION	DATE
1	OLD 09-054	02/17/12	3		
2			4		

DRAWN BY: I.A./A.G.

02/17/12 DATE

12-036 DRAWING No

SHEET 6 OF 17

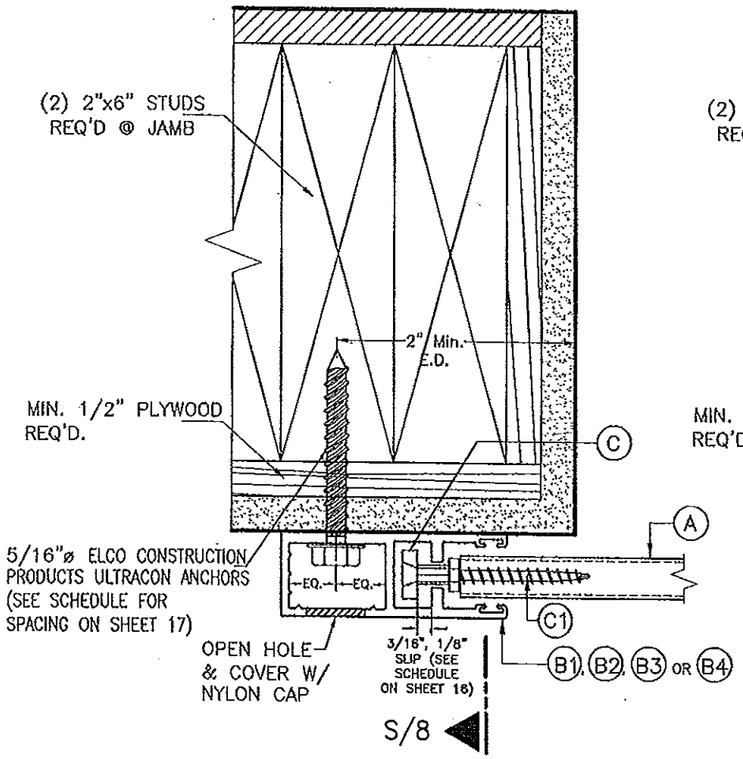

SECTION P-P (1):
WALL MOUNT

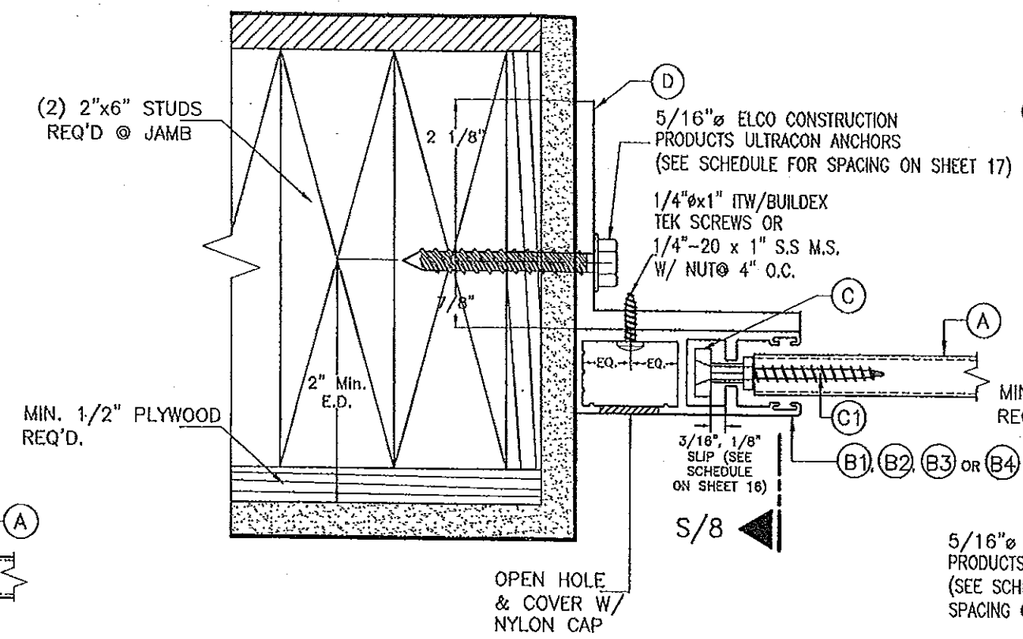

SECTION P-P (2):
INSIDE WALL MOUNT

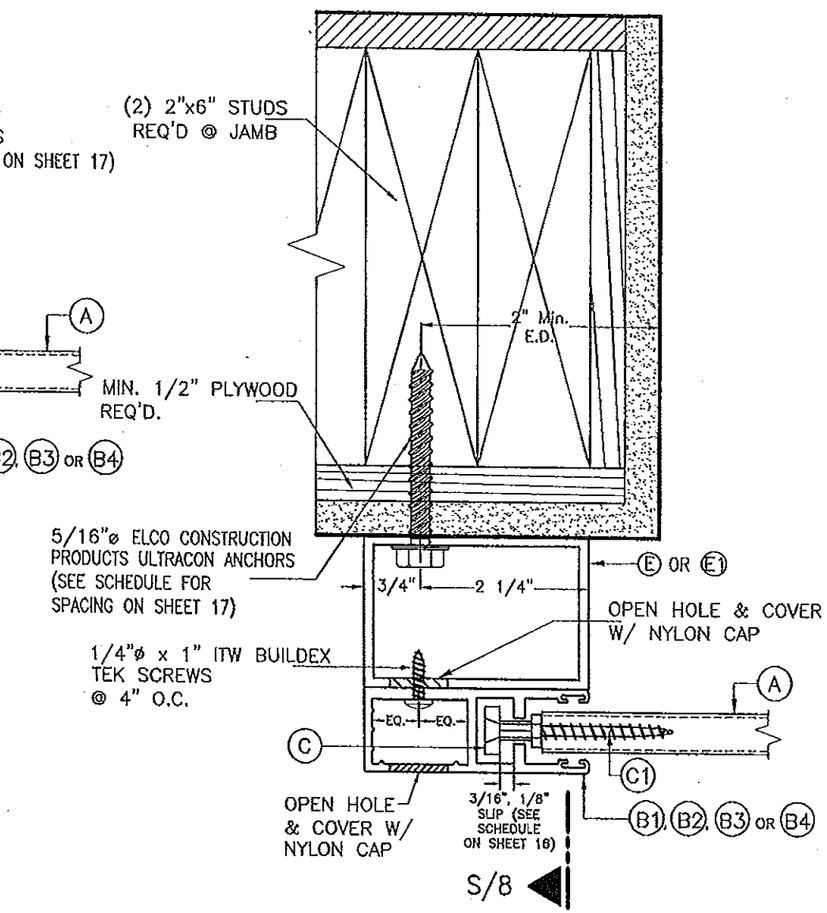

SECTION P-P (3):
BUILD-OUT MOUNT

SIDE RAIL CONNECTIONS TO WOOD WALL

SCALE: 1/2" = 1"

PRODUCT RENEWED
as complying with the Florida
Building Code
Acceptance No 15-0107.05
Expiration Date 04/28/2020
By
Miami Dade Product Control

PRODUCT REVISED
as complying with the Florida
Building Code
Acceptance No 12-0315.12
Expiration Date 04/28/2015
By
Miami Dade Product Control

FLORIDA BUILDING CODE. (High Velocity Hurricane Zone)

MIAMI-DADE COUNTY

WALTER A. TILLIT JR. LICENSE No. 44167 STATE OF FLORIDA PROFESSIONAL ENGINEER
SEAL/SIGNATURE/DATE

© 2012 TILTECO INC.

TILTECO INC.
TILLIT TESTING & ENGINEERING COMPANY
6355 N.W. 36th. St., Ste. 305 - VIRGINIA GARDENS, FL 33166
Phone : (305) 871-1530 , Fax : (305) 871-1531
e-mail: tilteco@aol.com
EB-0008719
WALTER A. TILLIT Jr., P.E.
FLORIDA Lic. # 44167

APEX A-55 SLAT ENGAGED ROLL-UP
HURRICANE ABATEMENT

ROLLAC SHUTTER OF TEXAS, INC.
5331 ORANGE STREET
PEARLAND, TX. 77581
PHONE: (800) 880-0922 FAX: (281) 485-0839

REV. No	DESCRIPTION	DATE	REV. No	DESCRIPTION	DATE
1	OLD 09-054	02/17/12	3		
2			4		

DRAWN BY: I.A./A.G.
02/17/12 DATE
12-036 DRAWING No
SHEET 6 OF 17

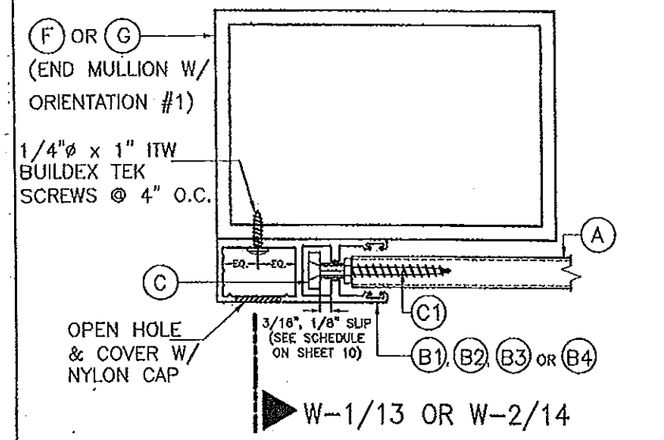

SECTION Q-Q:
MULLION MOUNT (FACE MOUNT)

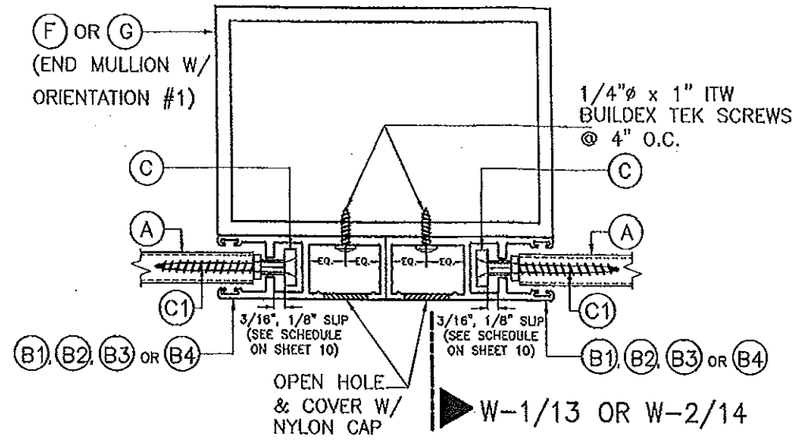

SECTION R-R:
MULLION MOUNT (FACE MOUNT)

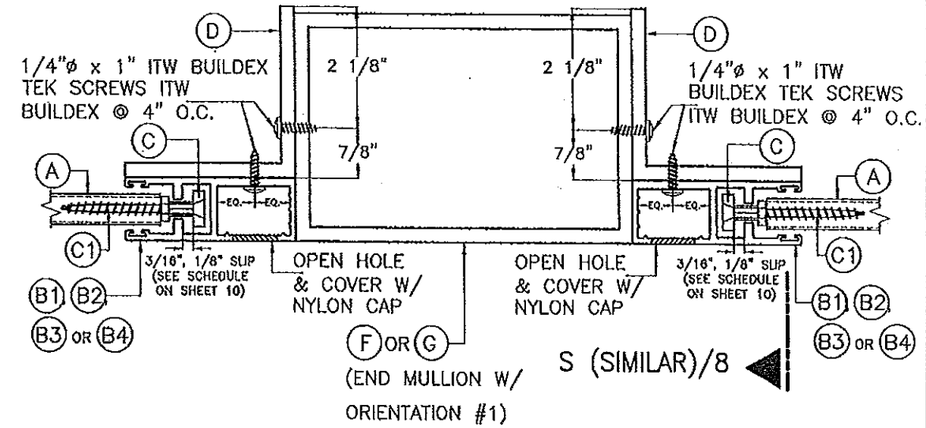

SECTION R'-R':
MULLION MOUNT (INSIDE MOUNT)

PRODUCT RENEWED
as complying with the Florida Building Code
Acceptance No 15-0107.05
Expiration Date 04/28/2020
By
Miami Dade Product Control

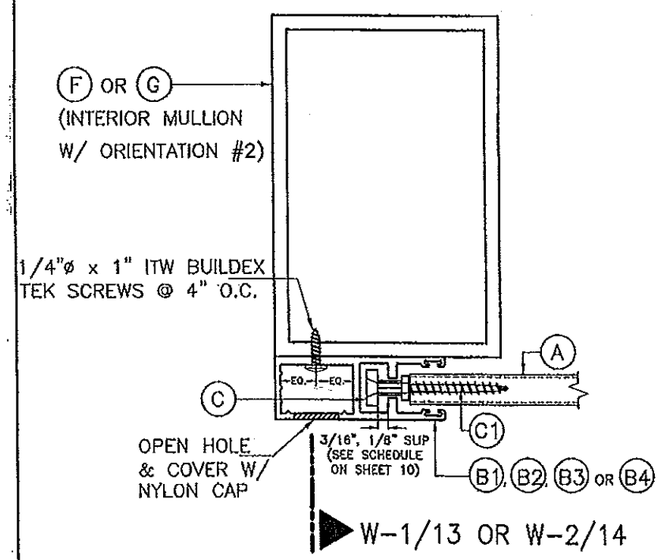

SECTION Q-Q:
MULLION MOUNT (FACE MOUNT)

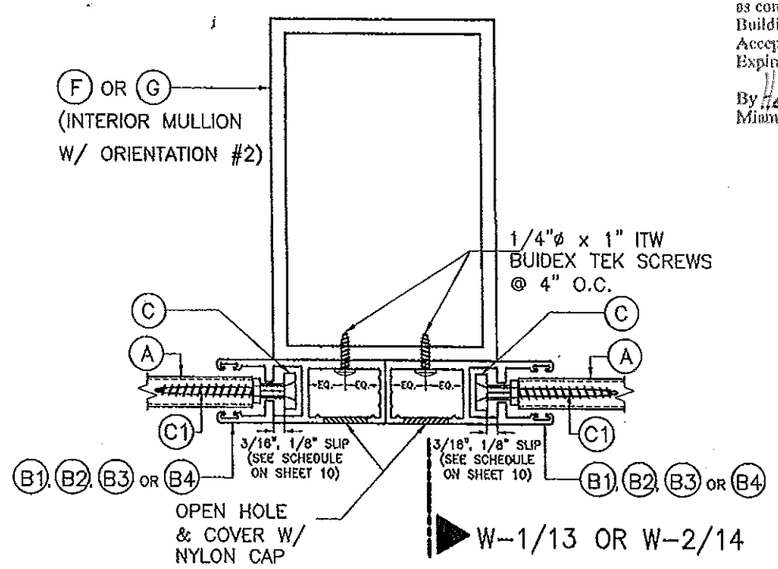

SECTION R-R:
MULLION MOUNT (FACE MOUNT)

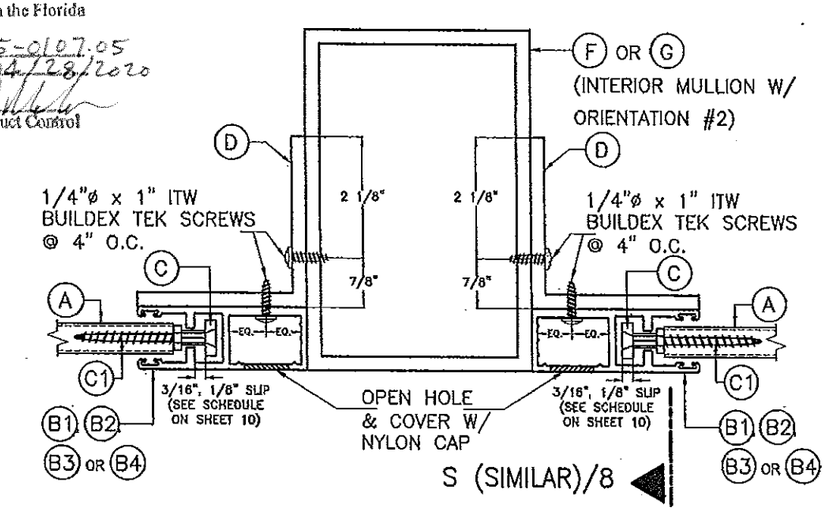

SECTION R'-R':
MULLION MOUNT (INSIDE MOUNT)

PRODUCT REVISED
as complying with the Florida Building Code
Acceptance No 12-0315.12
Expiration Date 04/28/2015
By
Miami Dade Product Control

SIDE RAIL CONNECTION TO MULLIONS

SCALE: 3/8" = 1"

MIAMI-DADE COUNTY

WALTER A. TILLIT JR. LICENSE No. 44167 STATE OF FLORIDA PROFESSIONAL ENGINEER

P.E. SEAL/SIGNATURE HERE

© 2012 TILTECO INC.

TILTECO INC.
TILLIT TESTING & ENGINEERING COMPANY
6355 N.W. 36th. St., Ste. 305 - VIRGINIA GARDENS, FL. 33166
Phone : (305) 871-1530 , Fax : (305) 871-1531
e-mail: tilteco@aol.com
EB-0006719
WALTER A. TILLIT Jr., P.E.
FLORIDA Lic. # 44167

FLORIDA BUILDING CODE. (High Velocity Hurricane Zone)

APEX A-55 SLAT ENGAGED ROLL-UP HURRICANE ABATEMENT

ROLLAC SHUTTER OF TEXAS, INC.
5331 ORANGE STREET
PEARLAND, TX. 77581
PHONE: (800) 880-0922 FAX: (281) 485-0839

REV. No	DESCRIPTION	DATE	REV. No	DESCRIPTION	DATE
1	OLD 09-054	02/17/12	3		
2			4		

DRAWN BY: I.A./A.G.
02/17/12 DATE
12-036 DRAWING No
SHEET 7 OF 17

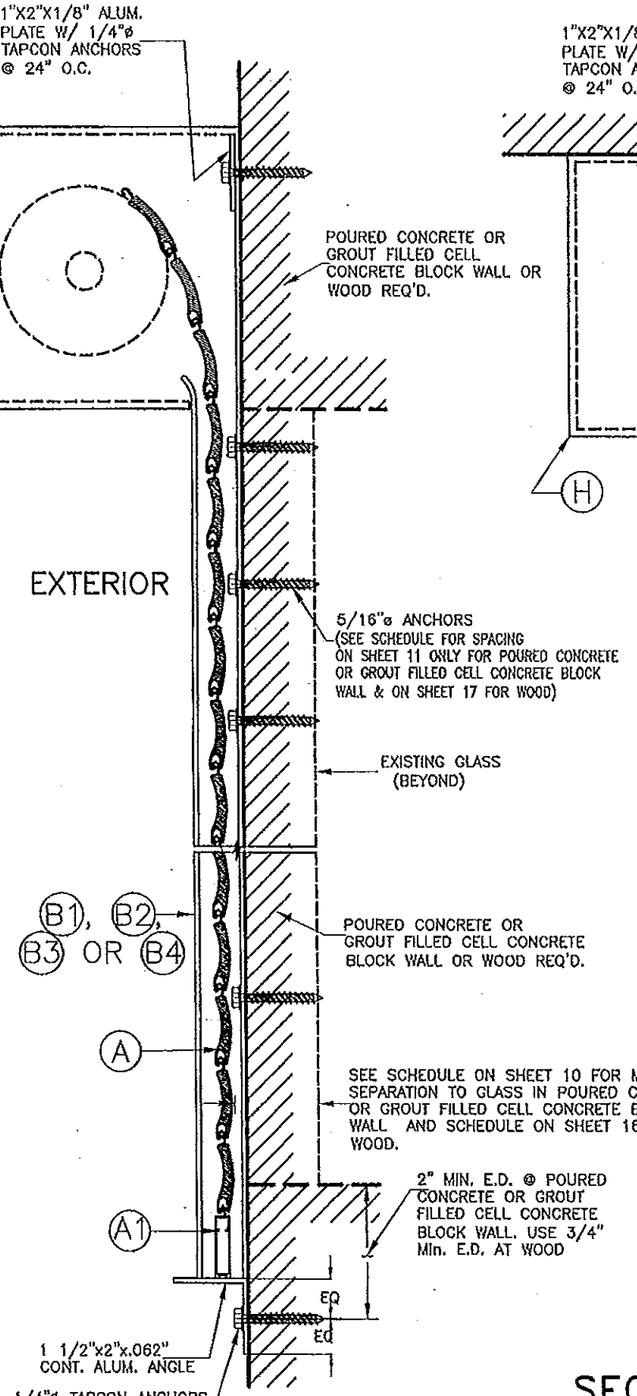

WALL MOUNTING

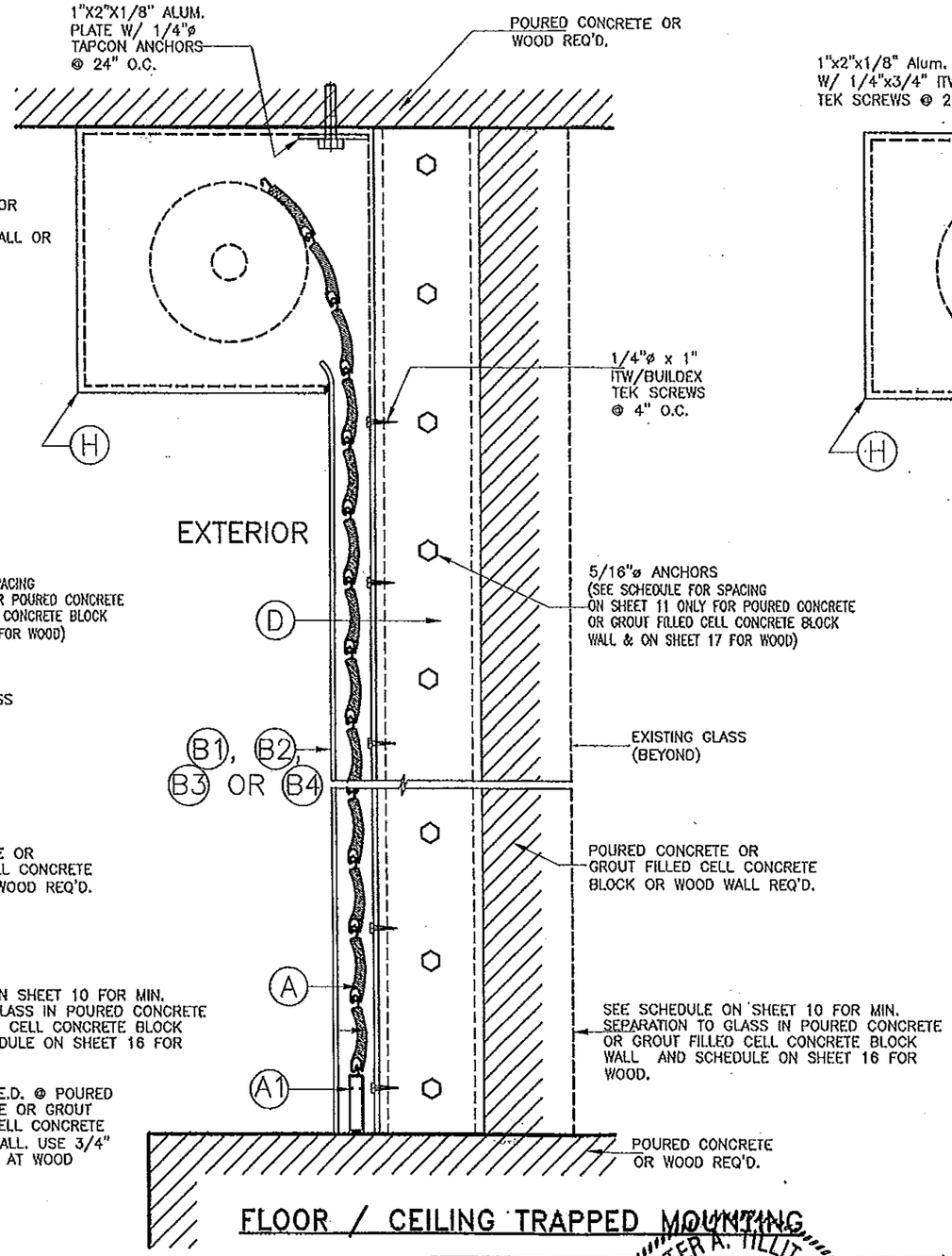

FLOOR / CEILING TRAPPED MOUNTING

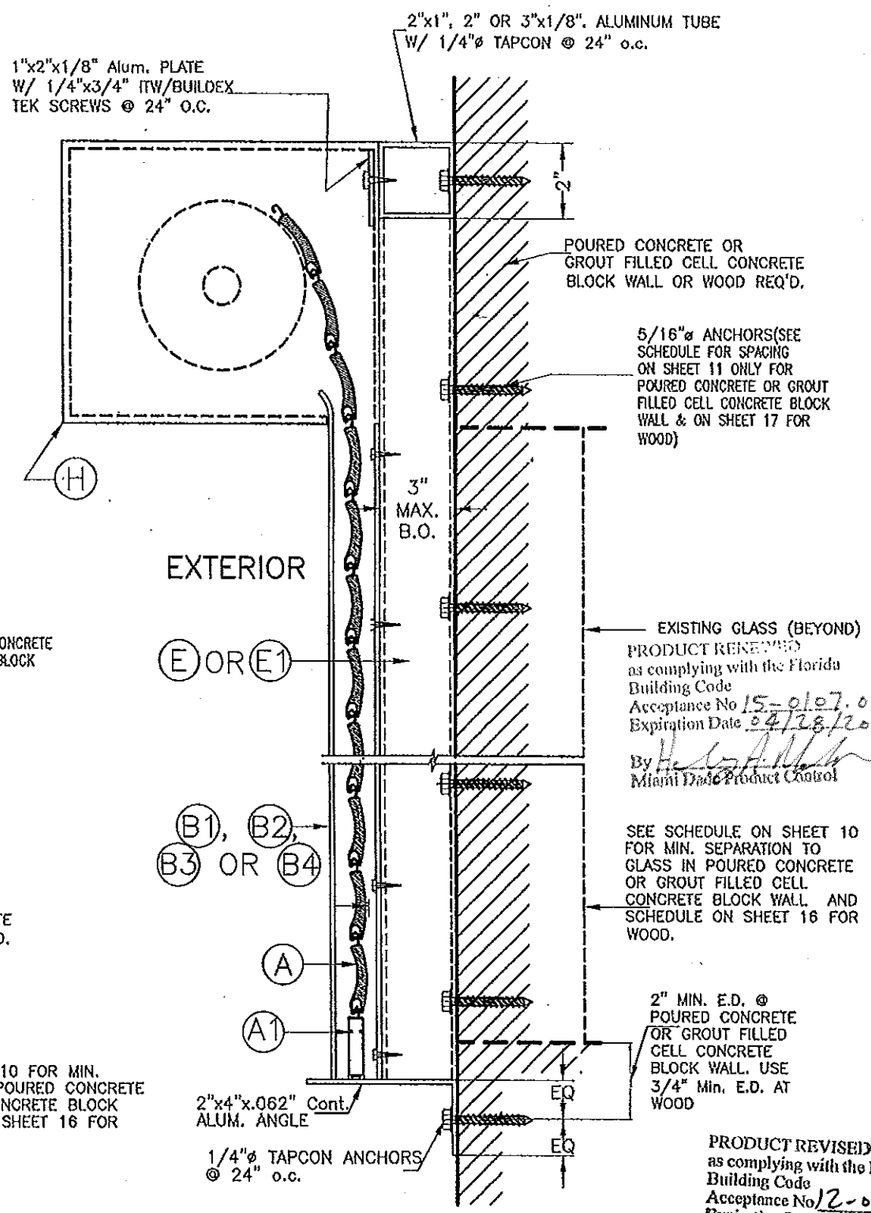

BUILD-OUT MOUNTING

PRODUCT REVISED
as complying with the Florida Building Code
Acceptance No 12-0315.12
Expiration Date 04/28/2015
By
Miami Dade Product Control

PRODUCT REVISED
as complying with the Florida Building Code
Acceptance No 15-0107.05
Expiration Date 04/28/2020
By
Miami Dade Product Control

SECTION S-S

N.T.S

INSTALLATION DETAILS ON EXISTING POURED CONCRETE OR GROUT FILLED CELL CONCRETE BLOCK WALL OR WOOD

MIAMI-DADE COUNTY

WALTER A. TILLIT JR. LICENSE No. 44167 STATE OF FLORIDA PROFESSIONAL ENGINEER

P.E. SEAL/SIGNATURE & DATE

© 2012 TILTECO INC.

TILTECO INC.
TILLIT TESTING & ENGINEERING COMPANY
8355 N.W. 36th. St., Ste. 305 - VIRGINIA GARDENS, FL 33166
Phone : (305) 871-1630 , Fax : (305) 871-1531
e-mail: tilteco@aol.com
EB-0006719
WALTER A. TILLIT Jr., P.E.
FLORIDA Lic. # 44167

FLORIDA BUILDING CODE. (High Velocity Hurricane Zone)

APEX A-55 SLAT ENGAGED ROLL-UP HURRICANE ABATEMENT

ROLLAC SHUTTER OF TEXAS, INC.
5331 ORANGE STREET
PEARLAND, TX. 77581
PHONE: (800) 880-0922 FAX: (281) 485-0839

REV. No	DESCRIPTION	DATE	REV. No	DESCRIPTION	DATE
1	OLD 08-054	02/17/12	3		
2			4		

DRAWN BY: I.A./A.G.

02/17/12 DATE

12-036 DRAWING No

SHEET 8 OF 17

TYPICAL MANDATORY PROCEDURE FOR VERIFYING PRODUCT'S CODE COMPLIANCE RELATED TO ITS INSTALLATION INTO EXISTING POURED CONCRETE OR GROUT FILLED CELL CONCRETE BLOCK STRUCTURES (*)

STEP 1:

OBTAIN JOB SITE'S A.S.D. DESIGN LOAD (p.s.f.) FOR THE OPENING AND DESIRED PRODUCT SPAN "L" (ft) TO PROTECT IT (SEE GENERAL NOTE #1, ON SHEET 1).

STEP 2:

ENTER TO CHARTS I THRU III ON SHEET 10 TO DETERMINE, BASED ON AN ASSUMED SLAT SLIP (in); A.S.D. DESIGN LOAD (p.s.f.); AND PRODUCT SPAN "L" (ft) ; THE REQUIRED FINAL SLAT SLIP THAT SLATS MUST BE INSTALLED WITH TO MEET THE REQUIRED LOAD AND DESIRED PRODUCT SPAN.

THE FOLLOWING INFORMATION IS PROVIDED AT CHARTS I THRU III TO PROCEED WITH PRODUCT INSTALLATION VERIFICATION:

- ENTER A.S.D. DESIGN LOAD: SEE STEP (1) ABOVE.
- FOR A SPECIFIC PRODUCT MOUNTING INSTALLATION TYPE, THE FOLLOWING DEFINITIONS FOR SLAT SPAN SHALL BE CONSIDERED:

LMAX: THIS IS THE MAXIMUM ALLOWABLE PRODUCT SPAN FOR WHICH A GIVEN SLAT SLIP (3/16", 1/8" OR LESS THAN 1/8") MAY BE USED, FOR A GIVEN A.S.D. DESIGN LOAD.

LMIN: THIS IS THE MINIMUM ALLOWABLE PRODUCT SPAN FOR WHICH A GIVEN SLIP (3/16", 1/8" OR LESS THAN 1/8") MAY BE USED, FOR A GIVEN A.S.D. DESIGN LOAD. IN CASE JOB SITE DESIRED PRODUCT SPAN (L) WAS SHORTER THAN LMIN, THEN GO TO THE OTHER CHARTS WITH A SHORTER SLAT SLIP AND VERIFY THAT (L) IS ALLOWED FOR THAT OTHER SHORTER SLIP.

- MINIMUM REQUIRED SEPARATION TO GLASS IS PROVIDED ON CHARTS I, II & III: PROVIDES SEPARATION TO GLASS FOR PRODUCTS WITH OR WITHOUT MULLIONS.

STEP 3:

OBTAIN INFORMATION ON PRODUCT'S SIDE RAIL ANCHOR SPACING REQUIREMENTS FOR CONNECTION TO EXISTING STRUCTURE FROM ANCHOR SCHEDULE IV ON SHEET 11. ENTER SCHEDULE WITH FINALLY DETERMINED SUBSTRATE, MOUNTING TYPE, A.S.D. DESIGN LOAD & PRODUCT SPAN AND OBTAIN MAXIMUM ANCHOR SPACING (INCHES ON CENTERS). SEE GENERAL NOTE 6 ON SHEET 1 FOR ANCHOR SPECS.

STEP 4:

IF PRODUCT INSTALLATION INCLUDES MULLIONS, THE FOLLOWING MANDATORY ADDITIONAL PROCEDURE IS APPLICABLE.

PROCEDURE 4a: IF MULLIONS ARE USED

1. MINIMUM SEPARATION TO GLASS FOR SLATS IF MULLIONS ARE USED SHALL BE BASED ON CHARTS I, II & III ON SHEET 10. IT SHALL BE MEASURED FROM BACK OF SLATS TO GLASS.
2. ENTER SCHEDULES 1a THRU 2c ON SHEETS 15 W/ A.S.D. DESIGN LOAD; MAXIMUM MULLION SPACING (MAX., 10', 8' OR 6'), AND DETERMINE MAXIMUM MULLION SPAN (HEIGHT) W/ ALLOWABLE INTERPOLATION IN BETWEEN SPACINGS FOR A GIVEN Ⓕ & Ⓖ, MULLION TYPE & MULLION ORIENTATION.
3. SEE SHEETS 13 & 14 FOR REQUIRED MULLION CONNECTION DETAILS AT TOP & BOTTOM FOR FLOOR TO CEILING (TRAPPED) OR WALL MOUNTINGS OF MULLIONS INTO CONCRETE FOR A GIVEN MULLION TYPE Ⓕ & Ⓖ.

* PROCEDURE PER STEPS 1 THRU 3 IS SIMILAR FOR INSTALLATIONS INTO WOOD FRAME STRUCTURES. SEE SHEETS 16 & 17 FOR LIMITATIONS APPLICABLE TO INSTALLATIONS INTO WOOD FRAME STRUCTURES.

PRODUCT RENEWED
as complying with the Florida Building Code
Acceptance No 15-0107.05
Expiration Date 04/28/2020
By Helen A. Miller
Miami Dade Product Control

PRODUCT REVISED
as complying with the Florida Building Code
Acceptance No 12-0315.12
Expiration Date 04/28/2015
By Helen A. Miller
Miami Dade Product Control

FLORIDA BUILDING CODE. (High Velocity Hurricane Zone)

MIAMI-DADE COUNTY

WALTER A. TILLIT JR. LICENSE No. 44167 STATE OF FLORIDA PROFESSIONAL ENGINEER

P.E. SEAL/SIGNATURE & DATE

© 2012 TILTECO INC.

TILTECO INC.
TILLIT TESTING & ENGINEERING COMPANY
6335 N.W. 36th. St., Ste. 305 – VIRGINIA GARDENS, FL 33166
Phone : (305) 871-1530 , Fax : (305) 871-1531
e-mail: tilteco@aol.com
EB-0006719
WALTER A. TILLIT Jr., P.E.
FLORIDA Lic. # 44167

APEX A-55 SLAT ENGAGED ROLL-UP HURRICANE ABATEMENT

ROLLAC SHUTTER OF TEXAS, INC.
5331 ORANGE STREET
PEARLAND, TX. 77581
PHONE: (800) 880-0922 FAX: (281) 485-0839

REV. No	DESCRIPTION	DATE	REV. No	DESCRIPTION	DATE
1	OLD 09-054	02/17/12	3		
2			4		

DRAWN BY: I.A./A.G.
02/17/12 DATE
12-036 DRAWING No
SHEET 9 OF 17

SLAT PERFORMANCE CHARTS I, II & III:
VALID FOR INSTALLATIONS INTO POURED CONCRETE, GROUT FILLED CELL CONCRETE BLOCK OR MULLIONS AND FOR A GIVEN A.S.D. DESIGN PRESSURE RATING (p.s.f.) AND PRODUCT MOUNT CONDITION

CHART I (ONLY VALID FOR 3/16" SLIP)

USE MAXIMUM VALUE BETWEEN POSITIVE AND NEGATIVE A.S.D. LOAD						USE MAXIMUM POSITIVE A.S.D. LOAD VALUE
MAX. A.S.D. DESIGN PRESSURE RATING (p.s.f.)	MAX. SLAT SPAN				REQUIRED MIN. SLAT SPAN	MIN. SEPARATION TO GLASS (in)
	WALL MOUNT (SEE NOTES *)	TRAPPED MOUNT (SEE NOTES *)	BUILD-OUT MOUNT (SEE NOTES *)		WALL, TRAPPED & BUILD-OUT MOUNT W/ Ⓔ, Ⓔ1 (SEE NOTES *)	
			Ⓔ1	Ⓔ		
30.0	10'-0"	10'-0"	10'-0"	10'-0"	5'-11"	8"
35.0	10'-0"	10'-0"	10'-0"	10'-0"	5'-8"	8"
40.0	10'-0"	10'-0"	10'-0"	10'-0"	5'-5"	8"
45.0	10'-0"	10'-0"	10'-0"	9'-7"	5'-3"	8"
50.0	10'-0"	10'-0"	10'-0"	9'-0"	5'-1"	8"
53.3	10'-0"	10'-0"	10'-0"	8'-8"	5'-0"	8"

CHART II (ONLY VALID FOR 1/8" SLIP)

USE MAXIMUM VALUE BETWEEN POSITIVE AND NEGATIVE A.S.D. LOAD						USE MAXIMUM POSITIVE A.S.D. LOAD VALUE
MAX. A.S.D. DESIGN PRESSURE RATING (p.s.f.)	MAX. SLAT SPAN				REQUIRED MIN. SLAT SPAN	MIN. SEPARATION TO GLASS (in)
	WALL MOUNT (SEE NOTES *)	TRAPPED MOUNT (SEE NOTES *)	BUILD-OUT MOUNT (SEE NOTES *)		WALL, TRAPPED & BUILD-OUT MOUNT W/ Ⓔ, Ⓔ1 (SEE NOTES *)	
			Ⓔ1	Ⓔ		
30.0	9'-0"	9'-0"	9'-0"	9'-0"	5'-7"	8"
35.0	9'-0"	9'-0"	9'-0"	9'-0"	5'-4"	8"
40.0	9'-0"	9'-0"	9'-0"	9'-0"	5'-2"	8"
45.0	9'-0"	9'-0"	9'-0"	9'-0"	5'-0"	8"
50.0	9'-0"	9'-0"	9'-0"	8'-1"	4'-10"	8"
53.3	9'-0"	9'-0"	9'-0"	7'-10"	4'-9"	8"

CHART III (ONLY VALID FOR LESS THAN 1/8" SLIP)

USE MAXIMUM VALUE BETWEEN POSITIVE AND NEGATIVE A.S.D. LOAD			USE MAXIMUM POSITIVE A.S.D. LOAD VALUE
MAX. A.S.D. DESIGN PRESSURE RATING (p.s.f.)	MAX. SLAT SPAN L_{MAX} (ft)	REQUIRED MIN. SLAT SPAN L_{MIN} (ft)	MIN. SEPARATION TO GLASS (in)
	WALL TRAPPED & BUILD-OUT MOUNT W/ Ⓔ, Ⓔ1 (SEE NOTES *)	WALL TRAPPED & BUILD-OUT MOUNT W/ Ⓔ, Ⓔ1 (SEE NOTES *)	
30.0	3'-11"	0'-0"	4"
35.0	3'-8"	0'-0"	4"
40.0	3'-5"	0'-0"	4"
45.0	3'-3"	0'-0"	4"
50.0	3'-1"	0'-0"	4"
53.3	3'-0"	0'-0"	4"

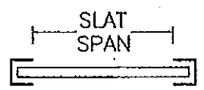

SLAT SPAN DEFINITION

* NOTES:

1. ABOVE INDICATED MAX. SLAT SPANS MAY BE USED AS LONG AS ANCHOR SPACING SCHEDULES ON SHEET 11 INDICATE THAT A SPACING IS AVAILABLE FOR THE CORRESPONDING SLAT SPAN AND A.S.D. DESIGN PRESSURE RATING.
2. REQUIRES SIDE RAILS FASTENED TO EXISTING STRUCTURE WITH 5/16"ø ITW BUILDEX TAPCON XL INTO POURED CONCRETE OR GROUT FILLED CELL CONCRETE BLOCK OR 1/4"ø TEK SCREWS AT MULLIONS CONNECTION VALID FOR WALL MOUNTED, INSIDE MOUNTED, AND BUILD-OUT MOUNTED.
3. MAXIMUM SLAT SPANS FOR INTERMEDIATE LOADS MAY BE DETERMINED BY LINEAR INTERPOLATION BETWEEN END VALUES.

PRODUCT RENEWED
as complying with the Florida
Building Code
Acceptance No 15-0107.05
Expiration Date 04/28/2020
By
Miami Dade Product Control

PRODUCT REVISED
as complying with the Florida
Building Code
Acceptance No 12-0315.12
Expiration Date 04/28/2015
By
Miami Dade Product Control

FLORIDA BUILDING CODE. (High Velocity Hurricane Zone)

MIAMI-DADE COUNTY

WALTER A. TILLIT JR. LICENSE No 44167 STATE OF FLORIDA PROFESSIONAL ENGINEER

P.E. SEAL/SIGNATURE/DATE

© 2012 TILTECO INC.

TILTECO INC.
TILLIT TESTING & ENGINEERING COMPANY
8335 N.W. 36th. St., Ste. 303 – VIRGINIA GARDENS, FL 33166
Phone : (305) 871-1830 , Fax : (305) 871-1831
e-mail: tilteco@aol.com
EB-0006719
WALTER A. TILLIT Jr., P.E.
FLORIDA Lic. # 44167

APEX A-55 SLAT ENGAGED ROLL-UP HURRICANE ABATEMENT

ROLLAC SHUTTER OF TEXAS, INC.
5331 ORANGE STREET
PEARLAND, TX. 77581
PHONE: (800) 880-0922 FAX: (281) 485-0839

REV. No	DESCRIPTION	DATE	REV. No	DESCRIPTION	DATE
1	OLD 09-054	02/17/12	3		
2			4		

DRAWN BY: I.A./A.G.
02/17/12 DATE
12-036 DRAWING No
SHEET 10 OF 17

MAX. ANCHOR SPACING SCHEDULE IV FOR A GIVEN PRODUCT MOUNTING TYPE W/ ø 5/16" ITW BUILDEX TAPCON XL ANCHORS TO POURED CONCRETE WALL OR GROUT FILLED CELL CONCRETE BLOCK WALL, FOR A GIVEN A.S.D. DESIGN PRESSURE RATING (p.s.f.) & SLAT SPAN RANGE

WALL MOUNT

MAX. A.S.D. DESIGN PRESSURE RATING RANGE	SLAT SPAN RANGE					
	0' to 4'	> 4' to 5'	> 5' to 6'	> 6' to 7'	> 7' to 9'	> 9' to 10'
≤ 30.0	8"	8"	8"	8"	8"	8"
≥ 31–40	8"	8"	8"	8"	8"	8"
≥ 41–53.3	8"	8"	8"	8"	7"	6"

TRAPPED MOUNT

MAX. A.S.D. DESIGN PRESSURE RATING RANGE	SLAT SPAN RANGE					
	0' to 4'	> 4' to 5'	> 5' to 6'	> 6' to 7'	> 7' to 9'	> 9' to 10'
≤ 30.0	6"	6"	6"	6"	6"	6"
≥ 31–40	6"	6"	6"	6"	6"	6"
≥ 41–53.3	6"	6"	6"	6"	6"	6"

BUILD-OUT MOUNT W/(E1) OR (E)

MAX. A.S.D. DESIGN PRESSURE RATING RANGE	SLAT SPAN RANGE					
	0' to 4'	> 4' to 5'	> 5' to 6'	> 6' to 7'	> 7' to 9'	> 9' to 10'
≤ 30.0	4"	4"	4"	4"	4"	4"
≥ 31–40	4"	4"	4"	4"	4"	4"
≥ 41–53.3	4"	4"	4"	4"	3 3/4"	3 3/4"

SLAT SPAN DEFINITION

PRODUCT RENEWED
as complying with the Florida
Building Code
Acceptance No 15-0107.05
Expiration Date 04/28/2020
By
Miami Dade Product Control

PRODUCT REVISED
as complying with the Florida
Building Code
Acceptance No 12-0315.12
Expiration Date 04/28/2015
By
Miami Dade Product Control

FLORIDA BUILDING CODE. (High Velocity Hurricane Zone)

MIAMI-DADE COUNTY

WALTER A. TILLIT JR. LICENSE ~~No. 44167~~ STATE OF FLORIDA PROFESSIONAL ENGINEER

P.E. SEAL, SIGNATURE/DATE

© 2012 TILTECO INC.

TILTECO INC.
TILLIT TESTING & ENGINEERING COMPANY
8355 N.W. 36th. St., Ste. 305 – VIRGINIA GARDENS, FL 33166
Phone : (305) 871-1830 , Fax : (305) 871-1531
e-mail: tilteco@aol.com
EB-0006719
WALTER A. TILLIT Jr., P.E.
FLORIDA Lic. # 44167

APEX A-55 SLAT ENGAGED ROLL-UP HURRICANE ABATEMENT

ROLLAC SHUTTER OF TEXAS, INC.
5331 ORANGE STREET
PEARLAND, TX. 77581
PHONE: (800) 880-0922 FAX: (281) 485-0839

REV. No	DESCRIPTION	DATE	REV. No	DESCRIPTION	DATE
1	OLD 09-054	02/17/12	3		
2			4		

DRAWN BY: I.A./A.G.
02/17/12 DATE
12-036 DRAWING No
SHEET 11 OF 17

SCHEDULE V:

Vx FORCES (Lb/ft) & **Vy** FORCES (Lb/ft) ACTING AT JAMBS FOR AN A.S.D. DESIGN PRESSURE RATING RANGE (p.s.f.) AND SLAT SPAN RANGE FOR POURED CONCRETE OR GROUT FILLED CELL CONCRETE BLOCK WALL BUILDINGS *

(USE MAXIMUM VALUE BETWEEN POSITIVE AND NEGATIVE A.S.D. LOAD)

MAX. A.S.D. DESIGN PRESSURE RATING RANGE	SLAT SPAN RANGE											
	0' to 4'		> 4' to 5'		> 5' to 6'		> 6' to 7'		> 7' to 9'		> 9' to 10'	
	Vx	Vy	Vx	Vy	Vx	Vy	Vx	Vy	Vx	Vy	Vx	Vy
≤ 30.0	10	59	11	84	10	89	246	105	565	135	702	150
≥ 31–40	10	68	22	103	10	108	412	140	786	180	952	200
≥ 41–53.3	10	80	21	127	10	133	624	187	1070	240	1273	267

*NOTE:

IT SHALL BE THE RESPONSIBILITY OF THE CONTRACTOR OR PERMIT HOLDER TO VERIFY THAT EXISTING STRUCTURE IS DESIGNED TO SUPPORT Vx AND Vy FORCES IN POUNDS PER UNIT FOOT OF PRODUCT HEIGHT AT BOTH JAMBS.
SEE THIS SHEET FOR Vx & Vy VALUES.

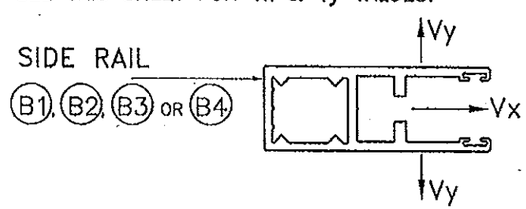

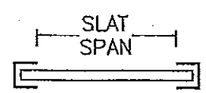

SLAT SPAN DEFINITION

PRODUCT RENEWED
as complying with the Florida
Building Code
Acceptance No 15-0107.05
Expiration Date 04/28/2020
By
Miami Dade Product Control

PRODUCT REVISED
as complying with the Florida
Building Code
Acceptance No 12-0315.12
Expiration Date 04/28/2015
By
Miami Dade Product Control

WALTER A. TILLIT JR. LICENSE No. 44167 STATE OF FLORIDA PROFESSIONAL ENGINEER

MIAMI-DADE COUNTY

REV. SEAL/SIGNATURE/DATE

© 2012 TILTECO INC.

TILTECO INC.
TILLIT TESTING & ENGINEERING COMPANY
6355 N.W. 36th. St., Ste. 305 – VIRGINIA GARDENS, FL 33166
Phone : (305) 871-1530 , Fax : (305) 871-1531
e-mail: tilteco@aol.com
EB-0006719
WALTER A. TILLIT Jr., P.E.
FLORIDA Lic. # 44167

FLORIDA BUILDING CODE. (High Velocity Hurricane Zone)

APEX A-55 SLAT ENGAGED ROLL-UP HURRICANE ABATEMENT

ROLLAC SHUTTER OF TEXAS, INC.
5331 ORANGE STREET
PEARLAND, TX. 77581
PHONE: (800) 880-0922 FAX: (281) 485-0839

REV. No	DESCRIPTION	DATE	REV. No	DESCRIPTION	DATE
1	OLD 09-054	02/17/12	3		
2			4		

DRAWN BY: I.A./A.G.
02/17/12 DATE
12-036 DRAWING No
SHEET 12 OF 17

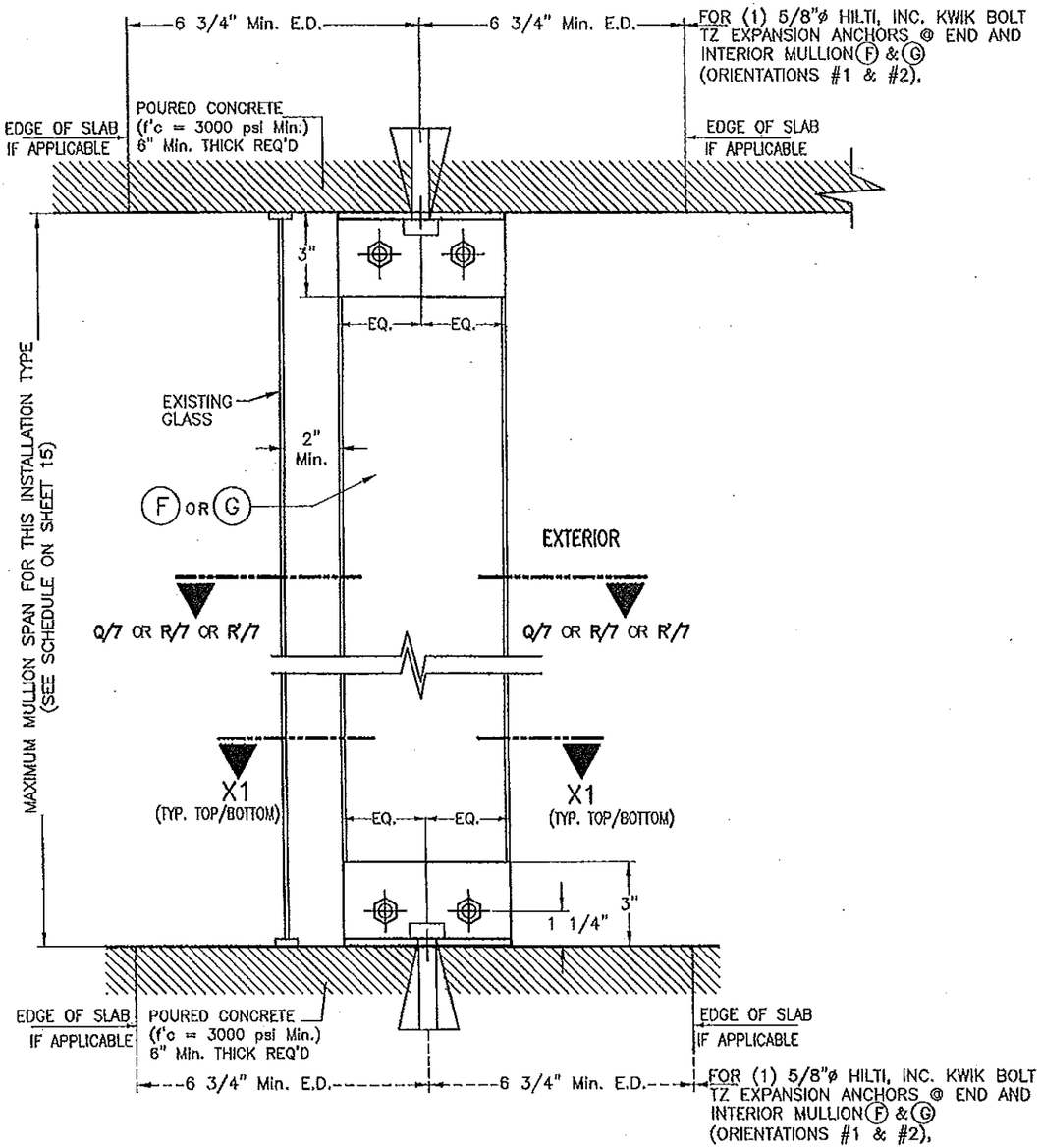

FLOOR TO CEILING / TRAPPED MOUNTING:
MULLION (F) OR (G)
SECTION W-1 *

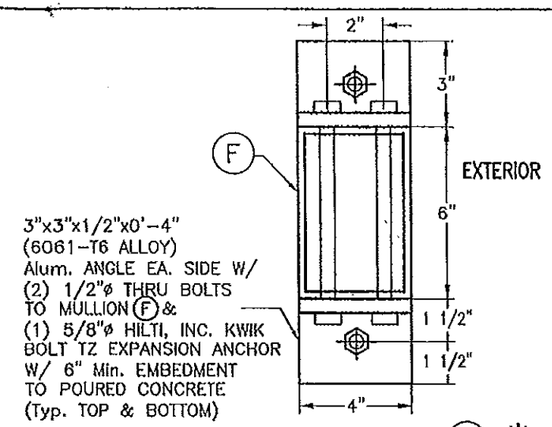

SECTION X1-X1 W/ (F) *
(END & INTERIOR MULLION W/ ORIENTATION # 1)

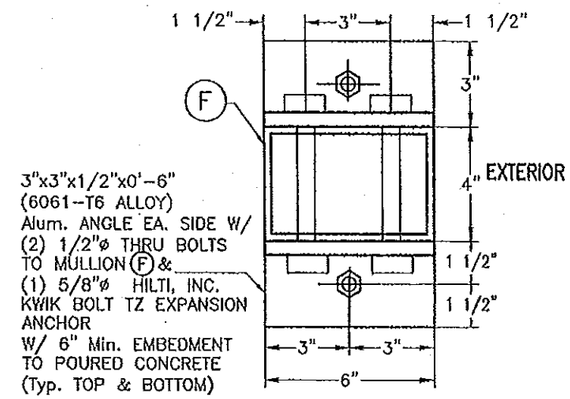

ALTERNATIVE SECTION X1-X1 W/ (F) *
(END & INTERIOR MULLION W/ ORIENTATION # 2)

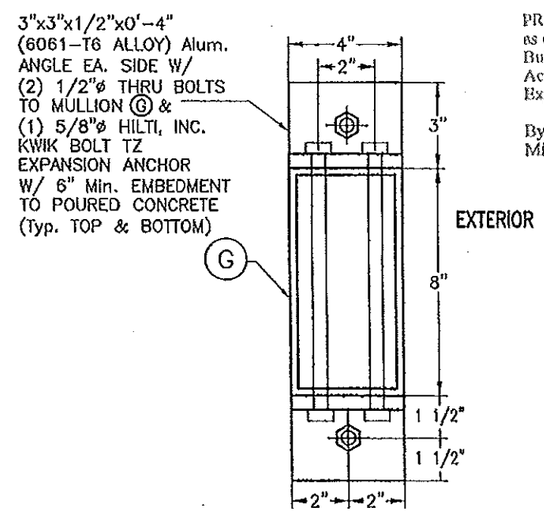

PRODUCT RENEWED
as complying with the Florida Building Code
Acceptance No 15-0107.05
Expiration Date 04/28/2020
By: Miami Dade Product Control

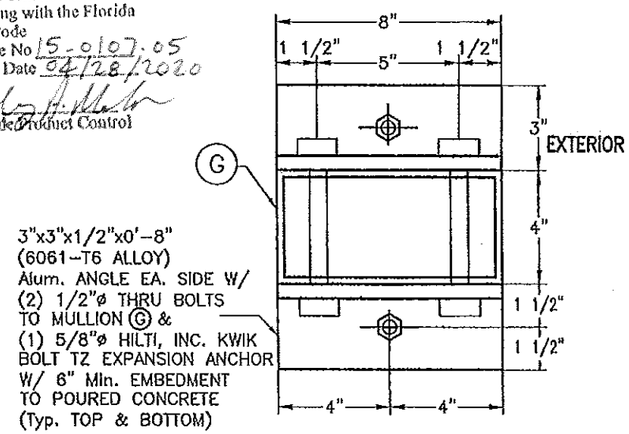

SECTION X1-X1 W/ (G) *
(END & INTERIOR MULLION W/ ORIENTATION # 1)

ALTERNATIVE SECTION X1-X1 W/ (G) *
(END & INTERIOR MULLION W/ ORIENTATION # 2)

PRODUCT REVISED
as complying with the Florida Building Code
Acceptance No 12-0315.12
Expiration Date 04/28/2015
By: Miami Dade Product Control

* SIDE RAILS (B1), (B2), (B3) OR (B4) AND BOX NOT SHOWN FOR CLARITY.

END & INTERIOR TRAPPED MOUNTED MULLION INSTALLATION

SCALE: 3/16" = 1"

FLORIDA BUILDING CODE. (High Velocity Hurricane Zone)

MIAMI-DADE COUNTY

WALTER A. TILLIT JR. LICENSE No. 44167 STATE OF FLORIDA PROFESSIONAL ENGINEER

P.E. SEAL/SIGNATURE/DATE

© 2012 TILTECO INC.

TILTECO INC.
TILLIT TESTING & ENGINEERING COMPANY
6355 N.W. 36th. St., Ste. 305 – VIRGINIA GARDENS, FL 33166
Phone : (305) 871-1830 , Fax : (305) 871-1831
e-mail: tilteco@aol.com
EB-0006719
WALTER A. TILUT Jr., P.E.
FLORIDA Lic. # 44167

APEX A-55 SLAT ENGAGED ROLL-UP HURRICANE ABATEMENT

ROLLAC SHUTTER OF TEXAS, INC.
5331 ORANGE STREET
PEARLAND, TX. 77581
PHONE: (800) 880-0922 FAX: (281) 485-0839

REV. No	DESCRIPTION	DATE	REV. No	DESCRIPTION	DATE
1	OLD 09-054	02/17/12	3		
2			4		

DRAWN BY: I.A./A.G.
02/17/12 DATE
12-036 DRAWING No
SHEET 13 OF 17

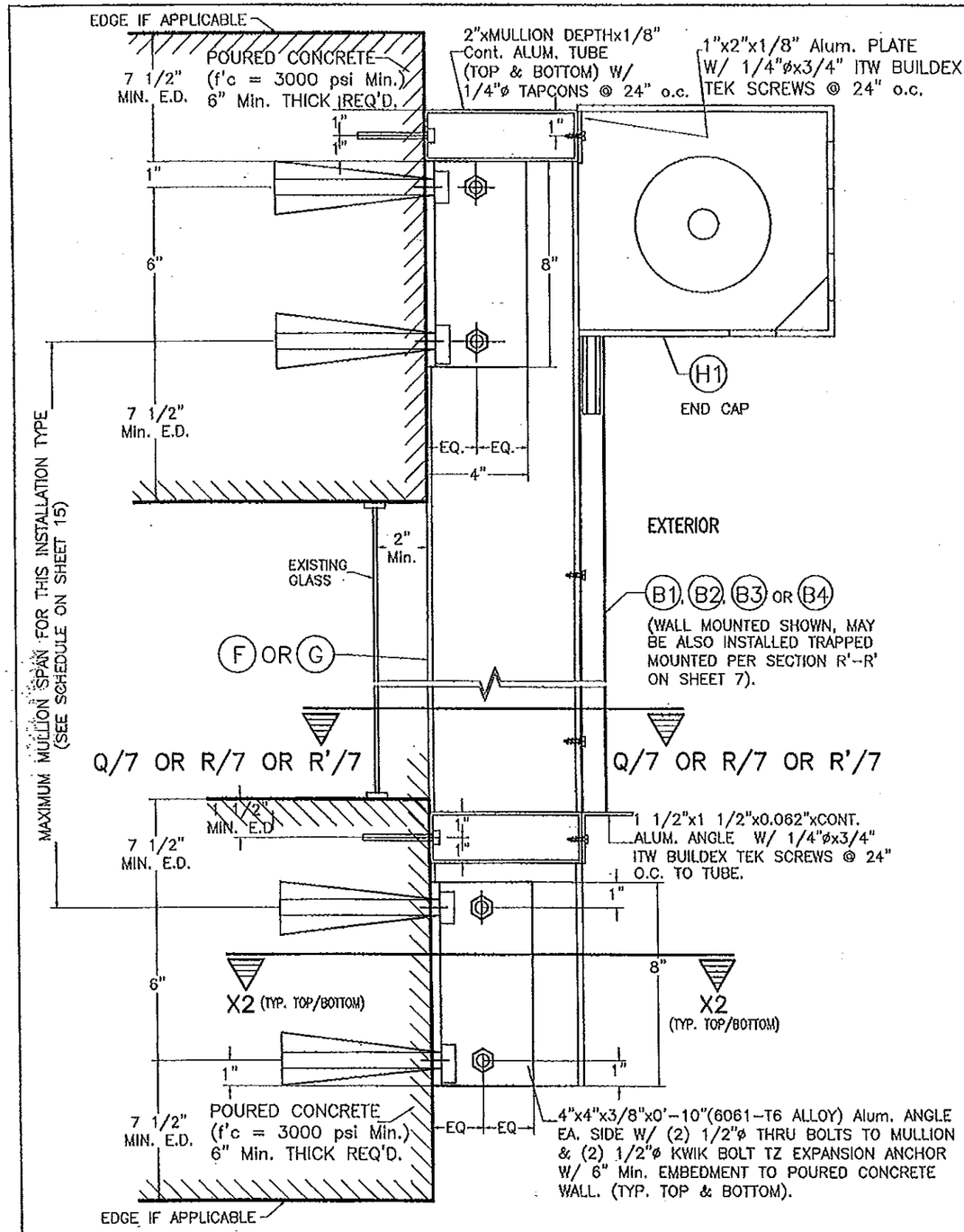

WALL MOUNTING : MULLION (F) OR (G) POURED CONCRETE WALL SECTION W-2 *

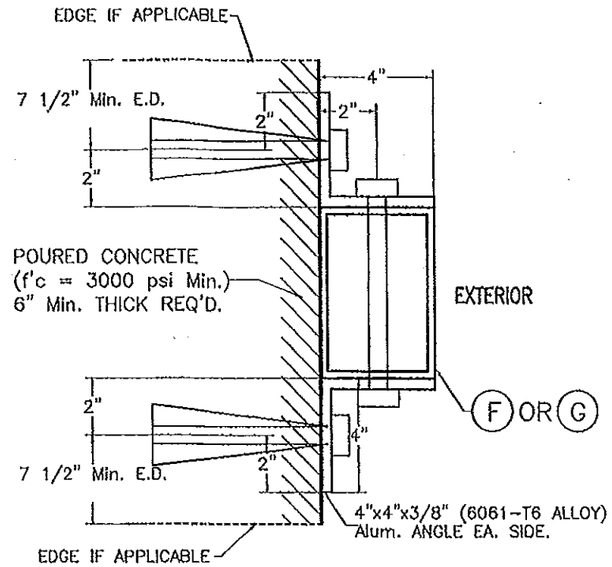

SECTION X2-X2 W/ (F) OR (G) *

(END & INTERIOR MULLION W/ ORIENTATION # 1)
(6"x4" OR 8"x4")

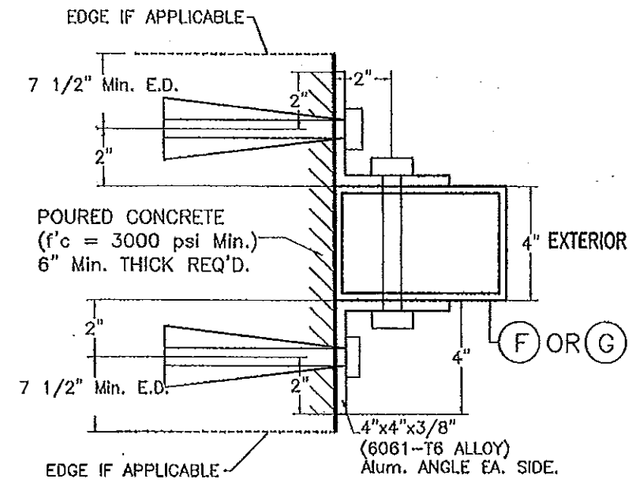

ALTERNATIVE SECTION X2-X2 W/ (F) OR (G) *

(END & INTERIOR MULLION W/ ORIENTATION # 2)
(4"x6" OR 4"x8")

* SIDE RAILS (B1), (B2), (B3) OR (B4) NOT SHOWN FOR CLARITY.

END & INTERIOR WALL MOUNTED MULLION INSTALLATION

SCALE: 1/8" = 1"

PRODUCT RENEWED as complying with the Florida Building Code Acceptance No 15-0107.05 Expiration Date 04/28/2020 By Miami Dade Product Control

PRODUCT REVISED as complying with the Florida Building Code Acceptance No 12-0315.12 Expiration Date 04/28/2015 By Miami Dade Product Control

FLORIDA BUILDING CODE. (High Velocity Hurricane Zone)

MIAMI-DADE COUNTY

WALTER A. TILLIT JR. LICENSE No. 44167 STATE OF FLORIDA PROFESSIONAL ENGINEER

P.E. SEAL/SIGNATURE/DATE

© 2012 TILTECO INC.

TILTECO INC.
TILLIT TESTING & ENGINEERING COMPANY
3350 N.W. 36th St., Ste. 305 - VIRGINIA GARDENS, FL 33166
Phone : (305) 871-1530 , Fax : (305) 871-1531
e-mail: tilteco@aol.com
EB-0006719
WALTER A. TILLIT Jr., P.E.
FLORIDA Lic. # 44167

APEX A-55 SLAT ENGAGED ROLL-UP HURRICANE ABATEMENT

ROLLAC SHUTTER OF TEXAS, INC.
5331 ORANGE STREET
PEARLAND, TX. 77581
PHONE: (800) 880-0922 FAX: (281) 485-0839

REV. No	DESCRIPTION	DATE	REV. No	DESCRIPTION	DATE
1	OLD 09-054	02/17/12	3		
2			4		

DRAWN BY: I.A./A.G.
02/17/12 DATE
12-036 DRAWING No
SHEET 14 OF 17

SCHEDULE 1a
FLOOR TO CEILING (TRAPPED) MOUNTING
MAX. SPAN (ft.) FOR END AND INTERIOR MULLION FOR A GIVEN A.S.D. DESIGN PRESSURE RATING (p.s.f.) AND A 10'-0" MAX. MULLION SPACING (ft.)*
VALID ONLY FOR INSTALLATIONS INTO CONCRETE

MAX. A.S.D. DESIGN PRESSURE RATING (p.s.f.)	MAXIMUM MULLION SPACING (ft) *	MAXIMUM MULLION SPAN (ft.)							
		(F) 4"x6"x1/4" MULLION				(G) 4"x8"x1/4" MULLION			
		ORIENTATION #1 (⟺) ‡		ORIENTATION #2 ([]) ‡		ORIENTATION #1 (⟺) ‡		ORIENTATION #2 ([]) ‡	
		END	INTERIOR	END	INTERIOR	END	INTERIOR	END	INTERIOR
30.0	10'-0"	11'-1"	12'-0"	9'-3"	12'-0"	12'-0"	12'-0"	12'-0"	12'-0"
35.0	10'-0"	10'-3"	11'-7"	8'-9"	11'-7"	12'-0"	12'-0"	12'-0"	12'-0"
40.0	10'-0"	9'-6"	11'-1"	8'-4"	11'-1"	11'-4"	12'-0"	11'-1"	12'-0"
45.0	10'-0"	9'-0"	10'-8"	8'-0"	10'-8"	10'-3"	11'-7"	9'-10"	11'-7"
50.0	10'-0"	8'-6"	10'-4"	7'-9"	10'-4"	9'-3"	11'-3"	8'-10"	11'-3"
53.3	10'-0"	8'-3"	10'-1"	7'-7"	10'-1"	8'-8"	11'-0"	8'-4"	11'-0"

SCHEDULE 2a
WALL MOUNTING
MAX. SPAN (ft.) FOR END AND INTERIOR MULLION FOR A GIVEN A.S.D. DESIGN PRESSURE RATING (p.s.f.) AND A 10'-0" MAX. MULLION SPACING (ft.)*
VALID ONLY FOR INSTALLATIONS INTO CONCRETE

MAX. A.S.D. DESIGN PRESSURE RATING (p.s.f.)	MAXIMUM MULLION SPACING (ft) *	MAXIMUM MULLION SPAN (ft.)							
		(F) 4"x6"x1/4" MULLION				(G) 4"x8"x1/4" MULLION			
		ORIENTATION #1 (⟺) ‡		ORIENTATION #2 ([]) ‡		ORIENTATION #1 (⟺) ‡		ORIENTATION #2 ([]) ‡	
		END	INTERIOR	END	INTERIOR	END	INTERIOR	END	INTERIOR
30.0	10'-0"	11'-1"	12'-0"	9'-3"	12'-0"	12'-0"	12'-0"	12'-0"	12'-0"
35.0	10'-0"	10'-3"	11'-7"	8'-9"	11'-7"	12'-0"	12'-0"	8'-7"	12'-0"
40.0	10'-0"	9'-6"	11'-1"	8'-4"	11'-1"	11'-4"	12'-0"	7'-6"	12'-0"
45.0	10'-0"	9'-0"	10'-8"	8'-0"	10'-8"	10'-8"	11'-7"	6'-7"	11'-7"
50.0	10'-0"	8'-6"	10'-4"	7'-9"	10'-4"	10'-1"	11'-3"	5'-11"	11'-3"
53.3	10'-0"	8'-3"	10'-1"	7'-7"	10'-1"	9'-9"	11'-0"	5'-7"	11'-0"

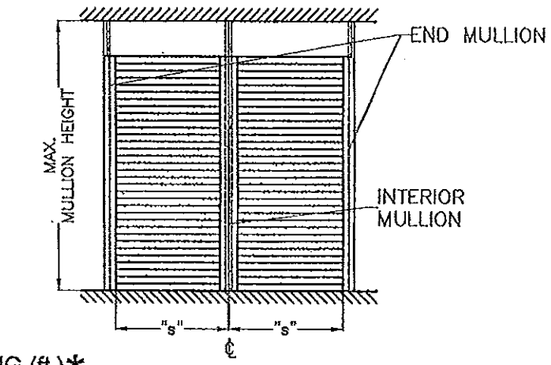

MULLION SPACING: "s"

SCHEDULE 1b
FLOOR TO CEILING (TRAPPED) MOUNTING
MAX. SPAN (ft.) FOR END AND INTERIOR MULLION FOR A GIVEN A.S.D. DESIGN PRESSURE RATING (p.s.f.) AND A 8'-0" MAX. MULLION SPACING (ft.)*
VALID ONLY FOR INSTALLATIONS INTO CONCRETE

MAX. A.S.D. DESIGN PRESSURE RATING (p.s.f.)	MAXIMUM MULLION SPACING (ft) *	MAXIMUM MULLION SPAN (ft.)							
		(F) 4"x6"x1/4" MULLION				(G) 4"x8"x1/4" MULLION			
		ORIENTATION #1 (⟺) ‡		ORIENTATION #2 ([]) ‡		ORIENTATION #1 (⟺) ‡		ORIENTATION #2 ([]) ‡	
		END	INTERIOR	END	INTERIOR	END	INTERIOR	END	INTERIOR
30.0	8'-0"	12'-0"	12'-0"	11'-0"	12'-0"	12'-0"	12'-0"	12'-0"	12'-0"
35.0	8'-0"	12'-0"	12'-0"	10'-3"	12'-0"	12'-0"	12'-0"	12'-0"	12'-0"
40.0	8'-0"	11'-7"	12'-0"	9'-8"	12'-0"	12'-0"	12'-0"	12'-0"	12'-0"
45.0	8'-0"	10'-10"	11'-6"	9'-2"	11'-6"	12'-0"	12'-0"	12'-0"	12'-0"
50.0	8'-0"	10'-3"	11'-1"	8'-10"	11'-1"	12'-0"	12'-0"	12'-0"	12'-0"
53.3	8'-0"	9'-10"	10'-11"	8'-7"	10'-11"	11'-8"	11'-10"	11'-7"	11'-10"

SCHEDULE 2b
WALL MOUNTING
MAX. SPAN (ft.) FOR END AND INTERIOR MULLION FOR A GIVEN A.S.D. DESIGN PRESSURE RATING (p.s.f.) AND A 8'-0" MAX. MULLION SPACING (ft.)*
VALID ONLY FOR INSTALLATIONS INTO CONCRETE

MAX. A.S.D. DESIGN PRESSURE RATING (p.s.f.)	MAXIMUM MULLION SPACING (ft) *	MAXIMUM MULLION SPAN (ft.)							
		(F) 4"x6"x1/4" MULLION				(G) 4"x8"x1/4" MULLION			
		ORIENTATION #1 (⟺) ‡		ORIENTATION #2 ([]) ‡		ORIENTATION #1 (⟺) ‡		ORIENTATION #2 ([]) ‡	
		END	INTERIOR	END	INTERIOR	END	INTERIOR	END	INTERIOR
30.0	8'-0"	12'-0"	12'-0"	11'-0"	12'-0"	12'-0"	12'-0"	12'-0"	12'-0"
35.0	8'-0"	12'-0"	12'-0"	10'-3"	12'-0"	12'-0"	12'-0"	12'-0"	12'-0"
40.0	8'-0"	11'-7"	12'-0"	9'-8"	12'-0"	12'-0"	12'-0"	12'-0"	12'-0"
45.0	8'-0"	10'-10"	11'-6"	9'-2"	11'-6"	12'-0"	12'-0"	9'-11"	12'-0"
50.0	8'-0"	10'-3"	11'-1"	8'-10"	11'-1"	12'-0"	12'-0"	8'-10"	12'-0"
53.3	8'-0"	9'-10"	10'-11"	8'-7"	10'-11"	11'-8"	11'-10"	8'-2"	11'-10"

* MAXIMUM MULLION SPACING SHALL BE SUCH THAT MAX SLAT SPAN FOR THAT A.S.D. DESIGN PRESSURE RATING SHALL NOT BE EXCEEDED.

‡ MULLION ORIENTATION IS AS SEEN FROM THE OUTSIDE (EXTERIOR) OF PRODUCT.

SCHEDULE 1c
FLOOR TO CEILING (TRAPPED) MOUNTING
MAX. SPAN (ft.) FOR END AND INTERIOR MULLION FOR A GIVEN A.S.D. DESIGN PRESSURE RATING (p.s.f.) AND A 6'-0" MAX. MULLION SPACING (ft.) *
VALID ONLY FOR INSTALLATIONS INTO CONCRETE

MAX. A.S.D. DESIGN PRESSURE RATING (p.s.f.)	MAXIMUM MULLION SPACING (ft) *	MAXIMUM MULLION SPAN (ft.)							
		(F) 4"x6"x1/4" MULLION				(G) 4"x8"x1/4" MULLION			
		ORIENTATION #1 (⟺) ‡		ORIENTATION #2 ([]) ‡		ORIENTATION #1 (⟺) ‡		ORIENTATION #2 ([]) ‡	
		END	INTERIOR	END	INTERIOR	END	INTERIOR	END	INTERIOR
30.0	6'-0"	12'-0"	12'-0"	12'-0"	12'-0"	12'-0"	12'-0"	12'-0"	12'-0"
35.0	6'-0"	12'-0"	12'-0"	12'-0"	12'-0"	12'-0"	12'-0"	12'-0"	12'-0"
40.0	6'-0"	12'-0"	12'-0"	12'-0"	12'-0"	12'-0"	12'-0"	12'-0"	12'-0"
45.0	6'-0"	12'-0"	12'-0"	12'-0"	12'-0"	12'-0"	12'-0"	12'-0"	12'-0"
50.0	6'-0"	12'-0"	12'-0"	12'-0"	12'-0"	12'-0"	12'-0"	12'-0"	12'-0"
53.3	6'-0"	12'-0"	12'-0"	11'-7"	12'-0"	12'-0"	12'-0"	12'-0"	12'-0"

SCHEDULE 2c
WALL MOUNTING
MAX. SPAN (ft.) FOR END AND INTERIOR MULLION FOR A GIVEN A.S.D. DESIGN PRESSURE RATING (p.s.f.) AND A 6'-0" MAX. MULLION SPACING (ft.) *
VALID ONLY FOR INSTALLATIONS INTO CONCRETE

MAX. A.S.D. DESIGN PRESSURE RATING (p.s.f.)	MAXIMUM MULLION SPACING (ft) *	MAXIMUM MULLION SPAN (ft.)							
		(F) 4"x6"x1/4" MULLION				(G) 4"x8"x1/4" MULLION			
		ORIENTATION #1 (⟺) ‡		ORIENTATION #2 ([]) ‡		ORIENTATION #1 (⟺) ‡		ORIENTATION #2 ([]) ‡	
		END	INTERIOR	END	INTERIOR	END	INTERIOR	END	INTERIOR
30.0	6'-0"	12'-0"	12'-0"	12'-0"	12'-0"	12'-0"	12'-0"	12'-0"	12'-0"
35.0	6'-0"	12'-0"	12'-0"	12'-0"	12'-0"	12'-0"	12'-0"	12'-0"	12'-0"
40.0	6'-0"	12'-0"	12'-0"	12'-0"	12'-0"	12'-0"	12'-0"	12'-0"	12'-0"
45.0	6'-0"	12'-0"	12'-0"	12'-0"	12'-0"	12'-0"	12'-0"	12'-0"	12'-0"
50.0	6'-0"	12'-0"	12'-0"	12'-0"	12'-0"	12'-0"	12'-0"	12'-0"	12'-0"
53.3	6'-0"	12'-0"	12'-0"	11'-7"	12'-0"	12'-0"	12'-0"	12'-0"	12'-0"

PRODUCT RENEWED
as complying with the Florida
Building Code
Acceptance No 15-0107.05
Expiration Date 04/28/2020
By
Miami Dade Product Control

PRODUCT REVISED
as complying with the Florida
Building Code
Acceptance No 12-0315.12
Expiration Date 04/28/2015
By
Miami Dade Product Control

FLORIDA BUILDING CODE. (High Velocity Hurricane Zone)

MIAMI-DADE COUNTY

WALTER A. TILLIT JR. LICENSE No 44167 STATE OF FLORIDA PROFESSIONAL ENGINEER
SIGN, SEAL, SIGNATURE & DATE

© 2012 TILTECO INC.

TILTECO INC.
TILLIT TESTING & ENGINEERING COMPANY
6305 N.W. 35th. St., Ste. 305 - VIRGINIA GARDENS, FL 33166
Phone : (305) 871-1630 , Fax : (305) 871-1531
e-mail: tilteco@aol.com
EB-0008719
WALTER A. TILLIT Jr., P.E.
FLORIDA Lic. # 44167

APEX A-55 SLAT ENGAGED ROLL-UP HURRICANE ABATEMENT

ROLLAC SHUTTER OF TEXAS, INC.
5331 ORANGE STREET
PEARLAND, TX. 77581
PHONE: (800) 880-0922 FAX: (281) 485-0839

REV. No	DESCRIPTION	DATE	REV. No	DESCRIPTION	DATE
1	OLD 09-054	02/17/12	3		
2			4		

DRAWN BY: I.A./A.G.
02/17/12 DATE
12-036 DRAWING No
SHEET 15 OF 17

SLAT PERFORMANCE CHARTS Ib, IIb & IIIb:
FOR A GIVEN A.S.D. DESIGN PRESSURE RATING (p.s.f.) AND PRODUCT MOUNT CONDITION PER DETAIL 1 BELOW

CHART Ib: (ONLY VALID FOR 3/16" SLIP)

USE MAXIMUM VALUE BETWEEN POSITIVE AND NEGATIVE A.S.D. LOAD

MAX. A.S.D. DESIGN PRESSURE RATING (p.s.f.)	MAX. SLAT SPAN "LMAX." (ft)												REQUIRED MIN. SLAT SPAN "LMIN." (ft)	USE MAXIMUM POSITIVE A.S.D. LOAD VALUE
	WALL MOUNT (SEE NOTES Δ)			TRAPPED MOUNT (SEE NOTES Δ)			BUILD-OUT MOUNT (E1) (SEE NOTES Δ)			BUILD-OUT MOUNT (E) (SEE NOTES Δ)			WALL & TRAPPED MOUNT BUILD-OUT MOUNT W/ (E1) OR (E) G=0.36*, G=0.46* G=0.55* (SEE NOTES Δ)	MIN. SEPARATION TO GLASS MESURED TO BACK OF SLAT (in)
	G=0.55*	G=0.46*	G=0.36*	G=0.55*	G=0.46*	G=0.36*	G=0.55*	G=0.46*	G=0.36*	G=0.55*	G=0.46*	G=0.36*		
30.0	10'-0"	10'-0"	10'-0"	10'-0"	10'-0"	10'-0"	10'-0"	9'-9"	8'-6"	10'-0"	8'-10"	7'-9"	5'-11"	8"
35.0	10'-0"	10'-0"	–	10'-0"	10'-0"	–	10'-0"	8'-10"	–	10'-0"	8'-1"	–	5'-8"	
40.0	10'-0"	9'-6"	–	10'-0"	10'-0"	–	10'-0"	8'-3"	–	10'-0"	7'-7"	–	5'-5"	
45.0	10'-0"	–	–	10'-0"	–	–	10'-0"	–	–	9'-3"	–	–	5'-3"	
50.0	10'-0"	–	–	10'-0"	–	–	10'-0"	–	–	8'-8"	–	–	5'-1"	
53.3	10'-0"	–	–	10'-0"	–	–	10'-0"	–	–	8'-3"	–	–	5'-0"	

CHART IIb: (ONLY VALID FOR 1/8" SLIP)

USE MAXIMUM VALUE BETWEEN POSITIVE AND NEGATIVE A.S.D. LOAD

MAX. A.S.D. DESIGN PRESSURE RATING (p.s.f.)	MAX. SLAT SPAN "LMAX." (ft)												REQUIRED MIN. SLAT SPAN "LMIN." (ft)	USE MAXIMUM POSITIVE A.S.D. LOAD VALUE
	WALL MOUNT (SEE NOTES Δ)			TRAPPED MOUNT (SEE NOTES Δ)			BUILD-OUT MOUNT (E1) (SEE NOTES Δ)			BUILD-OUT MOUNT (E) (SEE NOTES Δ)			WALL & TRAPPED MOUNT BUILD-OUT MOUNT W/ (E1) OR (E) G=0.36*, G=0.46* G=0.55* (SEE NOTES Δ)	MIN. SEPARATION TO GLASS MESURED TO BACK OF SLAT (in)
	G=0.55*	G=0.46*	G=0.36*	G=0.55*	G=0.46*	G=0.36*	G=0.55*	G=0.46*	G=0.36*	G=0.55*	G=0.46*	G=0.36*		
30.0	9'-0"	9'-0"	9'-0"	9'-0"	9'-0"	9'-0"	9'-0"	8'-9"	7'-9"	9'-0"	8'-0"	7'-1"	5'-7"	8"
35.0	9'-0"	9'-0"	–	9'-0"	9'-0"	–	9'-0"	8'-0"	–	9'-0"	7'-4"	–	5'-4"	
40.0	9'-0"	8'-7"	–	9'-0"	9'-0"	–	9'-0"	7'-6"	–	9'-0"	6'-11"	–	5'-2"	
45.0	9'-0"	–	–	9'-0"	–	–	9'-0"	–	–	8'-4"	–	–	5'-0"	
50.0	9'-0"	–	–	9'-0"	–	–	9'-0"	–	–	7'-10"	–	–	4'-10"	
53.3	9'-0"	–	–	9'-0"	–	–	9'-0"	–	–	7'-5"	–	–	4'-9"	

CHART IIIb: (LESS THAN 1/8" SLIP)

USE MAXIMUM VALUE BETWEEN POSITIVE AND NEGATIVE A.S.D. LOAD

MAX. A.S.D. DESIGN PRESSURE RATING (psf)	MAX. SLAT SPAN "LMAX." (FT)	MIN. SLAT SPAN "LMIN." (FT)	USE MAXIMUM POSITIVE A.S.D. LOAD VALUE
	WALL & TRAPPED MOUNT BUILD-OUT MOUNT W/ (E1) OR (E) G=0.36*, G=0.46* G=0.55* (SEE NOTES Δ)	WALL & TRAPPED MOUNT BUILD-OUT MOUNT W/ (E1) OR (E) G=0.36*, G=0.46* G=0.55* (SEE NOTES Δ)	MIN. SEPARATION TO GLASS MESURED TO BACK OF SLAT (in)
30.0	3'-11"	0'-0"	4"
35.0	3'-8"		
40.0	3'-5"		
45.0	3'-3"		
50.0	3'-1"		
53.3	3'-0"		

*: G=0.55, APPLICABLE TO SOUTHERN YELLOW PINE #2 WOOD GRADE
G=0.46, APPLICABLE TO DOUGLAS FIR-SOUTH WOOD GRADE
G=0.36, APPLICABLE TO SPRUCE PINE-FIR SOUTH WOOD GRADE

Δ NOTES:

1. ABOVE INDICATED MAX. SLAT SPANS MAY BE USED AS LONG AS ANCHOR SPACING SCHEDULES ON SHEET 17 INDICATE THAT A SPACING IS AVAILABLE FOR THE CORRESPONDING SLAT SPAN AND A.S.D. DESIGN PRESSURE RATING.

†: WOOD FRAME WALL TO BE BUILT STRICTLY IN ACCORDANCE WITH SPECS GIVEN ON DETAIL 1 AND PROVISIONS FROM CHAPTER 23 OF THE FLORIDA BUILDING CODE. MIN. WALL LENGTH AT EITHER SIDE OF OPENING MUST BE 33 INCHES.

2. INSTALLATIONS VALID ONLY FOR PRODUCTS WITHOUT MULLIONS

PRODUCT RENEWED
as complying with the Florida
Building Code
Acceptance No 15-0107.05
Expiration Date 04/28/2020
By
Miami Dade Product Control

PRODUCT REVISED
as complying with the Florida
Building Code
Acceptance No 12-0315.12
Expiration Date 04/28/2015
By
Miami Dade Product Control

INSTALLATIONS INTO WOOD FRAME STRUCTURES

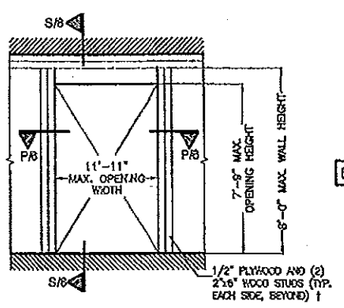

DETAIL 1 (ELEVATION)

SLAT SPAN DEFINITION

FLORIDA BUILDING CODE. (High Velocity Hurricane Zone)

MIAMI-DADE COUNTY

WALTER A. TILLIT JR. LICENSE No. 44167 STATE OF FLORIDA PROFESSIONAL ENGINEER
P.E. SEAL/SIGNATURE/DATE

© 2012 TILTECO INC.

TILTECO INC.
TILLIT TESTING & ENGINEERING COMPANY
6330 N.W. 36th. St., Ste. 305 – VIRGINIA GARDENS, FL 33166
Phone : (305) 871-1530 , Fax : (305) 871-1531
e-mail: tilteco@aol.com
EB-0008719
WALTER A. TILLIT Jr., P.E.
FLORIDA Lic. # 44167

APEX A-55 SLAT ENGAGED ROLL-UP HURRICANE ABATEMENT

ROLLAC SHUTTER OF TEXAS, INC.
5331 ORANGE STREET
PEARLAND, TX. 77581
PHONE: (800) 880-0922 FAX: (281) 485-0839

REV. No	DESCRIPTION	DATE	REV. No	DESCRIPTION	DATE
1	OLD 09-054	02/17/12	3		
2			4		

DRAWN BY: I.A./A.G.
02/17/12 DATE
12-036 DRAWING No
SHEET 16 OF 17

MAX. ANCHOR'S SPACING SCHEDULE VI FOR A GIVEN PRODUCT MOUNTING TYPE W/ ø 5/16" ELCO CONSTRUCTION PRODUCTS ULTRACON ANCHORS FOR A WOOD GRADE, A.S.D. DESIGN PRESSURE RATING (p.s.f)* AND SLAT SPAN RANGE

WALL MOUNT
TO 2"x6" WOOD STUD WITH MINIMUM 1/2" PLYWOOD

(SEE DETAIL 1 ON SHEET 16)

WOOD GRADE	SLAT SPAN RANGE						
	MAX. A.S.D. DESIGN PRESSURE RATING RANGE	0' to 4' *	> 4' to 5' *	> 5' to 6' *	> 6' to 7' *	> 7' to 9' *	> 9' to 10' *
SOUTHERN PINE #2 (G=0.55)	≤ 30.0	6"	6"	6"	6"	5"	4"
	40	6"	6"	6"	6"	4"	3"
	50	6"	6"	6"	5"	3"	–
	53.3	6"	6"	6"	5"	3"	–
DOUGLAS-FIR-SOUTH (G=0.46)	≤ 30.0	6"	6"	6"	6"	4 1/2"	3 1/2"
	40	6"	6"	6"	6"	3"	3"
SPRUCE PINE-FIR-SOUTH (G=0.36)	≤ 30.0	6"	6"	6"	6"	3 1/2"	3"

TRAPPED MOUNT
TO 2"x6" WOOD STUD WITH MINIMUM 1/2" PLYWOOD

(SEE DETAIL 1 ON SHEET 16)

WOOD GRADE	SLAT SPAN RANGE						
	MAX. A.S.D. DESIGN PRESSURE RATING RANGE	0' to 4' *	> 4' to 5' *	> 5' to 6' *	> 6' to 7' *	> 7' to 9' *	> 9' to 10' *
SOUTHERN PINE #2 (G=0.55)	≤ 30.0	6"	6"	6"	6"	6"	6"
	40	6"	6"	6"	6"	6"	6"
	50	6"	6"	6"	6"	6"	5"
	53.3	6"	6"	6"	6"	5"	5"
DOUGLAS-FIR-SOUTH (G=0.46)	≤ 30.0	6"	6"	6"	6"	6"	6"
	40	6"	6"	6"	6"	5"	4 1/2"
SPRUCE PINE-FIR-SOUTH (G=0.36)	≤ 30.0	6"	6"	6"	6"	5"	4"

BUILD-OUT MOUNT
TO 2"x6" WOOD STUD WITH MINIMUM 1/2" PLYWOOD

(SEE DETAIL 1 ON SHEET 16)

WOOD GRADE	SLAT SPAN RANGE												
	MAX. A.S.D. DESIGN PRESSURE RATING RANGE	0' to 4' * BUILD-OUT MOUNT W/		> 4' to 5' * BUILD-OUT MOUNT W/		> 5' to 6' * BUILD-OUT MOUNT W/		> 6' to 7' * BUILD-OUT MOUNT W/		> 7' to 9' * BUILD-OUT MOUNT W/		> 9' to 10' * BUILD-OUT MOUNT W/	
		(E1)	(E)	(E1)	(E)	(E1)	(E)	(E1)	(E)	(E1)	(E)	(E1)	(E)
SOUTHERN PINE #2 (G=0.55)	≤ 30.0	4"	4"	4"	4"	4"	4"	4"	4"	4"	3"	3"	3"
	40	4"	4"	4"	4"	4"	4"	4"	4"	3"	3"	–	–
	50	4"	4"	4"	4"	4"	4"	4"	3"	3"	3"	–	–
	53.3	4"	4"	4"	4"	4"	4"	4"	3"	3"	3"	–	–
DOUGLAS-FIR-SOUTH (G=0.46)	≤ 30.0	4"	4"	4"	4"	4"	4"	4"	4"	3"	3"	3"	–
	40	4"	4"	4"	4"	4"	4"	4"	4"	3"	3"	–	–
SPRUCE PINE-FIR-SOUTH (G=0.36)	≤ 30.0	4"	4"	4"	4"	4"	4"	4"	4"	3"	3"	–	–

PRODUCT RENEWED
as complying with the Florida Building Code
Acceptance No 15-0107.05
Expiration Date 04/28/2020
By
Miami Dade Product Control

PRODUCT REVISED
as complying with the Florida Building Code
Acceptance No 12-0315.12
Expiration Date 04/28/2015
By
Miami Dade Product Control

* NOTE:
MAX. SPAN FOR SLAT FOR A GIVEN A.S.D. DESIGN LOAD SHALL NEVER EXCEED MAX. SLAT SPAN INDICATED ON SLAT PERFORMANCE CHARTS ON 16 SHEET.

FLORIDA BUILDING CODE. (High Velocity Hurricane Zone)

MIAMI-DADE COUNTY

WALTER A. TILLIT JR. LICENSE No. 44167 STATE OF FLORIDA PROFESSIONAL ENGINEER

PER ESEAL/SIGNATURE/DATE

© 2012 TILTECO INC.

TILTECO INC.
TILLIT TESTING & ENGINEERING COMPANY
5355 N.W. 36th. St., Ste. 305 - VIRGINIA GARDENS, FL 33166
Phone : (305) 871-1530 , Fax : (305) 871-1531
e-mail: tilteco@aol.com
EB-0006719
WALTER A. TILLIT Jr., P.E.
FLORIDA Lic. # 44167

APEX A-55 SLAT ENGAGED ROLL-UP HURRICANE ABATEMENT

ROLLAC SHUTTER OF TEXAS, INC.
5331 ORANGE STREET
PEARLAND, TX. 77581
PHONE: (800) 880-0922 FAX: (281) 485-0839

REV. No	DESCRIPTION	DATE	REV. No	DESCRIPTION	DATE
1	OLD 09-054	02/17/12	3		
2			4		

DRAWN BY: I.A./A.G.
02/17/12 DATE
12-036 DRAWING No
SHEET 17 OF 17