MIAMI-DADE COUNTY
PRODUCT CONTROL SECTION
11805 SW 26 Street, Room 208
Miami, Florida 33175-2474
T (786) 315-2590 F (786) 315-2599
www.miamidade.gov/economy

DEPARTMENT OF REGULATORY AND ECONOMIC RESOURCES (RER)
BOARD AND CODE ADMINISTRATION DIVISION

NOTICE OF ACCEPTANCE (NOA)

Firestone Building Products Company, LLC (IN)
250 West 96 Street
Indianapolis, IN 46260

SCOPE:

This NOA is being issued under the applicable rules and regulations governing the use of construction materials. The documentation submitted has been reviewed and accepted by Miami-Dade County RER-Product Control Section to be used in Miami Dade County and other areas where allowed by the Authority Having Jurisdiction (AHJ).

This NOA shall not be valid after the expiration date stated below. The Miami-Dade County Product Control Section (In Miami Dade County) and/or the AHJ (in areas other than Miami Dade County) reserve the right to have this product or material tested for quality assurance purposes. If this product or material fails to perform in the accepted manner, the manufacturer will incur the expense of such testing and the AHJ may immediately revoke, modify, or suspend the use of such product or material within their jurisdiction. RER reserves the right to revoke this acceptance, if it is determined by Miami-Dade County Product Control Section that this product or material fails to meet the requirements of the applicable building code.

This product is approved as described herein, and has been designed to comply with the Florida Building Code, including the High Velocity Hurricane Zone.

DESCRIPTION: Series 1000 Aluminum Wall Panel System

APPROVAL DOCUMENT: Drawings No. **NPD2007-006001, 006201-006202, 006401-006406** and **006**, titled "Series 1000", sheets 1 through 24 of 24, dated 02/05/2015, prepared by Firestone Building Products Company, LLC, signed and sealed by Robert Nieminen, P.E., bearing the Miami-Dade County Product Control revision stamp with the Notice of Acceptance number and expiration date by the Miami-Dade County Product Control Section.

MISSILE IMPACT RATING: Large Missile Impact Resistant

LABELING: Each unit shall bear a permanent label with the manufacturer's name or logo, city, state and following statement: "Miami-Dade County Product Control Approved", unless otherwise noted herein.

RENEWAL of this NOA shall be considered after a renewal application has been filed and there has been no change in the applicable building code negatively affecting the performance of this product.

TERMINATION of this NOA will occur after the expiration date or if there has been a revision or change in the materials, use, and/or manufacture of the product or process. Misuse of this NOA as an endorsement of any product, for sales, advertising or any other purposes shall automatically terminate this NOA. Failure to comply with any section of this NOA shall be cause for termination and removal of NOA.

ADVERTISEMENT: The NOA number preceded by the words Miami-Dade County, Florida, and followed by the expiration date may be displayed in advertising literature. If any portion of the NOA is displayed, then it shall be done in its entirety.

INSPECTION: A copy of this entire NOA shall be provided to the user by the manufacturer or its distributors and shall be available for inspection at the job site at the request of the Building Official.

This NOA **renews and revises NOA # 09-1014.13** and consists of this page 1 and evidence pages E-1, as well as approval document mentioned above.

The submitted documentation was reviewed by **Carlos M. Utrera, P.E.**

MIAMI-DADE COUNTY APPROVED

04/28/2015

NOA No. 15-0114.07
Expiration Date: March 03, 2020
Approval Date: May 7, 2015

NOTICE OF ACCEPTANCE: EVIDENCE SUBMITTED

A. DRAWINGS

1. Drawings No. **NPD2007-006001, 006201-006202, 006401-006406** and **006**, titled "Series 1000", sheets 1 through 24 of 24, dated 02/05/2015, prepared by Firestone Building Products Company, LLC, signed and sealed by Robert Nieminen, P.E.

B. TESTS *"Submitted under NOA # 09-1014.13"*

1. Test reports on 1) Air Infiltration Test, per FBC, TAS 202-94
   2) Uniform Static Air Pressure Test, Loading per FBC TAS 202-94
   3) Water Resistance Test, per FBC, TAS 202-94
   4) Cyclic Wind Pressure Loading per FBC, TAS 203-94
   5) Tensile Test per ASTM E8-04

   along with marked-up drawings and installation diagram of Series 1000 Aluminum Composite Panels, prepared by Architectural Testing, Inc, Test Report No. **77172.02-201-18**, dated 08/31/2009, signed and sealed by Joseph A. Reed, P.E.

C. CALCULATIONS

1. Load attachment analysis prepared by Trinity ERD, dated 03/16/2015, signed and sealed by Robert Nieminen, P.E.

   "Submitted under NOA # 09-1014.13"

2. Panel calculations, prepared by Rice Engineering, dated 08/12/2009, signed and sealed by L. David Rice, P.E.

D. QUALITY ASSURANCE

1. Miami-Dade Department of Regulatory and Economic Resources (RER)

E. MATERIAL CERTIFICATIONS

1. None.

F. STATEMENTS

1. Statement letter of code conformance to 2010 and 5th edition (2014) FBC and of no financial interest issued by Trinity ERD, dated 03/16/2015, signed and sealed by Robert Nieminen, P.E.
2. State of Minnesota certificate of merger effective on 12/22/2010.
3. State of Indiana certificate of organization effective on 08/08/2006.

04/28/2015

Carlos M. Utrera, P.E.
Product Control Examiner
NOA No. 15-0114.07
Expiration Date: March 03, 2020
Approval Date: May 7, 2015

SERIES 1000
UNA-FAB PANEL

BILL OF MATERIALS

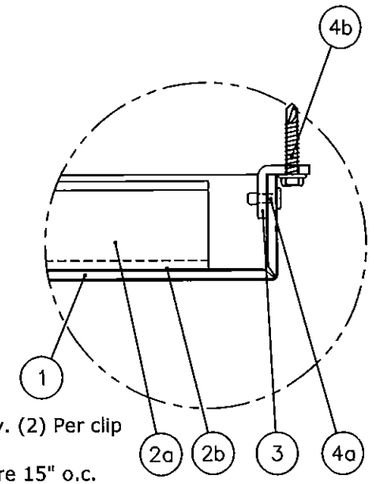

PANEL COMPOSITION

1. (4MM) Aluminum Composite Panel
2a. (.125) Extruded Aluminum, Stiffener (6063-T6)
2b. Stiffener attachment, 983 WITH PRIMER
2c. (.125) Aluminum Formed Channel

PANEL FASTENING

3. (.125) Aluminum formed clip (3003-H14)

PANEL FASTENERS

4a. Clip to panel fastener, Ø1/8" Alum. Body & Steel Mandral rivets. Qty. (2) Per clip or Qty. (2) #10-16 x 3/4" Self Drilling Fasteners per clip.
4b. Clip to subgrit Fastener, #10-16 x 1" Qty. (2) Per Clip where clips are 15" o.c. or Qty. (3) Per Clip where clips are 5" o.c.
4c. Framing fastener, #10-16 x 1-1/4"
4d. Subgrit to substrate, #14-14 x 1-1/2"

SUBGRIT

5. 14 Ga. (.075) Galv. Hat Channels, 7/8" Deep
5a. 8 Ga. (.164) Galv. Formed Subgirt
5b. 14 Ga. (.075) Galv. Formed Subgirt

ISOLATOR SHIMS & TAPE

6a. Standard glazing isolator shims as needed
6b. Dissimilar metals Separator Tape

SUBSTRATE

7a. 5/8" Gypsum board
7b. Valpro Shield underlayment
7c. Valpro Single sided perimeter / joint tape

STUD FRAMING

8a. Tracks, 1-1/2" x 6" 16 Ga. Galv.
8b. Studs, 1-1/2" x 6" 16 Ga. Galv.

FRAMING

9. 2" X 10" Yellow Pine

BACKER ROD

10. Rod, Ø5/8" Open cell neoprene

SEALANT

11. Horizontal and vertical joint sealant , Dow corning #756 SMS building sealant

FLASHINGS

12. (.040) Aluminum Perimiter flashing

1. It shall be the responsibility of the structural engineer of record to verify the structural integrity of the structure to support the loads superimposed by the panels.
2. The panels have been designed and tested in accordance with the Florida Building Code and the Aluminum Design Manual. They are tested in accordance with Miami-Dade County protocol TAS 301. The laboratory tests and test reports are TAS201, TAS202, & TAS203.
3. All metal stud substrate shall be MIN. 16 Ga. Fy = 50 KSI.
4. All structural steel substrate shall be MIN. Fy = 36 KSI.
5. Panel Widths and Heights are limited as shown in elevations and details.
6. Separation of dissimilar materials must be maintained per section 2003.8.4 of the FBC.
7. This panel system has been tested, analyzed, and approved for design pressures not to exceed 120 PSF.
8. Clip spacing may not be altered. Each clip and fastener used must be installed as detailed on the drawings.
9. These panels have not been tested for wind driven rain test. Florida Building Code, TAS-100 (A)-95.

Maximum Design Pressure = +/- 120.0 psf
Maximum Panel Widths and Heights are limited as shown in Elevations and Details.
Large and Small Missile Impact Resistant
Deflection Criteria: L/60

PRODUCT REVISED
as complying with the Florida Building Code
Acceptance No 15-0114.07
Expiration Date 03/03/2020
By
Miami Dade Product Control

ROBERT NIEMINEN
LICENSE
No 59166
03/30/2015
STATE OF FLORIDA
PROFESSIONAL ENGINEER

Qty. of (4) Complete Units Required

01OF24 PAGES

NO.	DATE	BY	DESCRIPTION OF REVISIONS
3	2/05/15	LAC	UPDATED COMPANY NAME
2	2/24/09	JRS	ADDED STRUCTURAL ENG. REQ.
1			

** NOTE TO INSTALLER **
These drawings represent Firestone' interpretation of the original architectural drawings. It is the responsibility of the installer to coordinate these drawings with the actual field conditions and dimensions as well as all other trade and provide Firestone with all panel face dimensions for fabrication. Please note that Firestone will not be responsible for any delays, or costs incurred due to changes made after the project has been released for fabrication. Firestone reserves the right to pursue compensation for costs incurred due to any changes made after the release for fabrication date.

Firestone BUILDING PRODUCTS
UNA-CLAD
1001 LUND BLVD. ANOKA, MINNESOTA 55303
NATIONWIDE 1-800-426-7737 LOCAL (763) 576-9595
Copyright © by Firestone Building Products / UNA-CLAD

PROJECT NAME: MIAMI DADE BUILDING CODES
CUSTOMER NAME: FIRESTONE BUILDING PRODUCTS
PANEL DESCRIPTION: SERIES 1000
DRAWING DESCRIPTION: COVER
DATE: 02/05/2015
SCALE FACTOR: 1=1
DRAFTER: LAC
DRAWING NUMBER: NPD2007-006001
PAGE NUMBER: 001

FAB. NUMBER: 13294

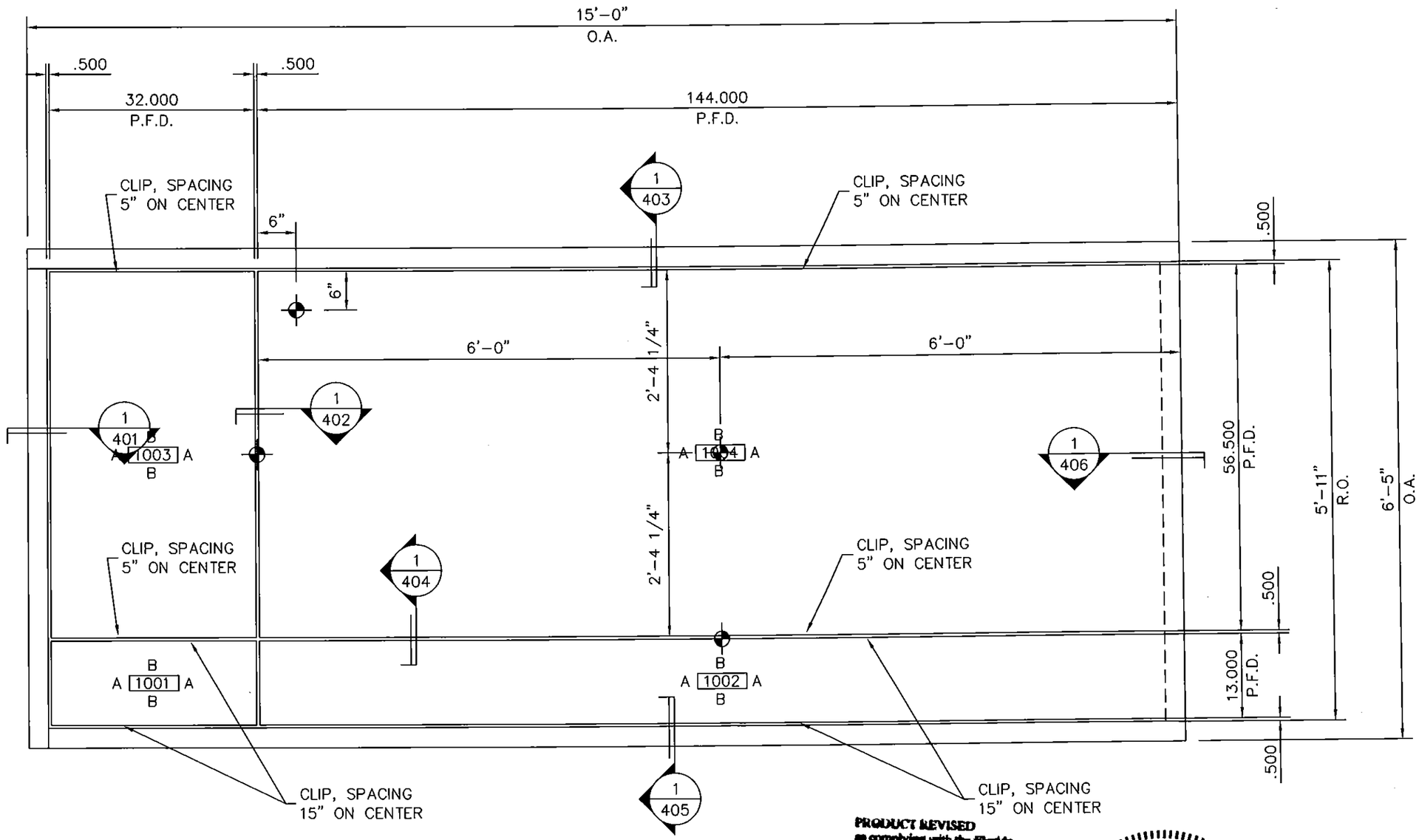

PRODUCT REVISED
as complying with the Florida
Building Code
Acceptance No 15-0114.07
Expiration Date 03/03/2020
By
Miami Dade Product Control

ROBERT NIEMINEN
LICENSE
No 59166
03/30/2015
STATE OF FLORIDA
PROFESSIONAL ENGINEER

Qty. of (4)
Complete Units
Required

1 / 201 ELEVATION
SCALE: 3/4"=1'-0"

02 OF 24 PAGES

NO.	DATE	BY	DESCRIPTION OF REVISIONS
3	2/05/15	LAC	UPDATED COMPANY NAME
1	2/24/09	JRS	ADDED STRUCTURAL ENG. REQ.

** NOTE TO INSTALLER **
These drawings represent Firestones' interpretation of the original architectural drawings. It is the responsibility of the installer to coordinate these drawings with the actual field conditions and dimensions as well as all other trade and provide Firestone with all panel face dimensions for fabrication. Please note that Firestone will not accept any responsibility for any delays or costs incurred due to changes made after the project has been released for fabrication. Firestone reserves the right to pursue compensation for costs incurred due to any changes made after the release for fabrication data.

Firestone BUILDING PRODUCTS
UNA-CLAD
1001 LUND BLVD. ANOKA, MINNESOTA 55303
NATIONWIDE 1-800-426-7737 LOCAL (763) 576-9595
Copyright © by Firestone Building Products / UNA-CLAD

PROJECT NAME: MIAMI DADE BUILDING CODE
CUSTOMER NAME: FIRESTONE BUILDING PRODUCTS
PANEL DESCRIPTION: SERIES 1000
DRAWING DESCRIPTION: ELEVATIONS
DATE: 02/05/2015
SCALE FACTOR: 1=18
DRAFTER: LAC
DRAWING NUMBER: NPD2007-006201
PAGE NUMBER: 201

FAB. NUMBER: 13294

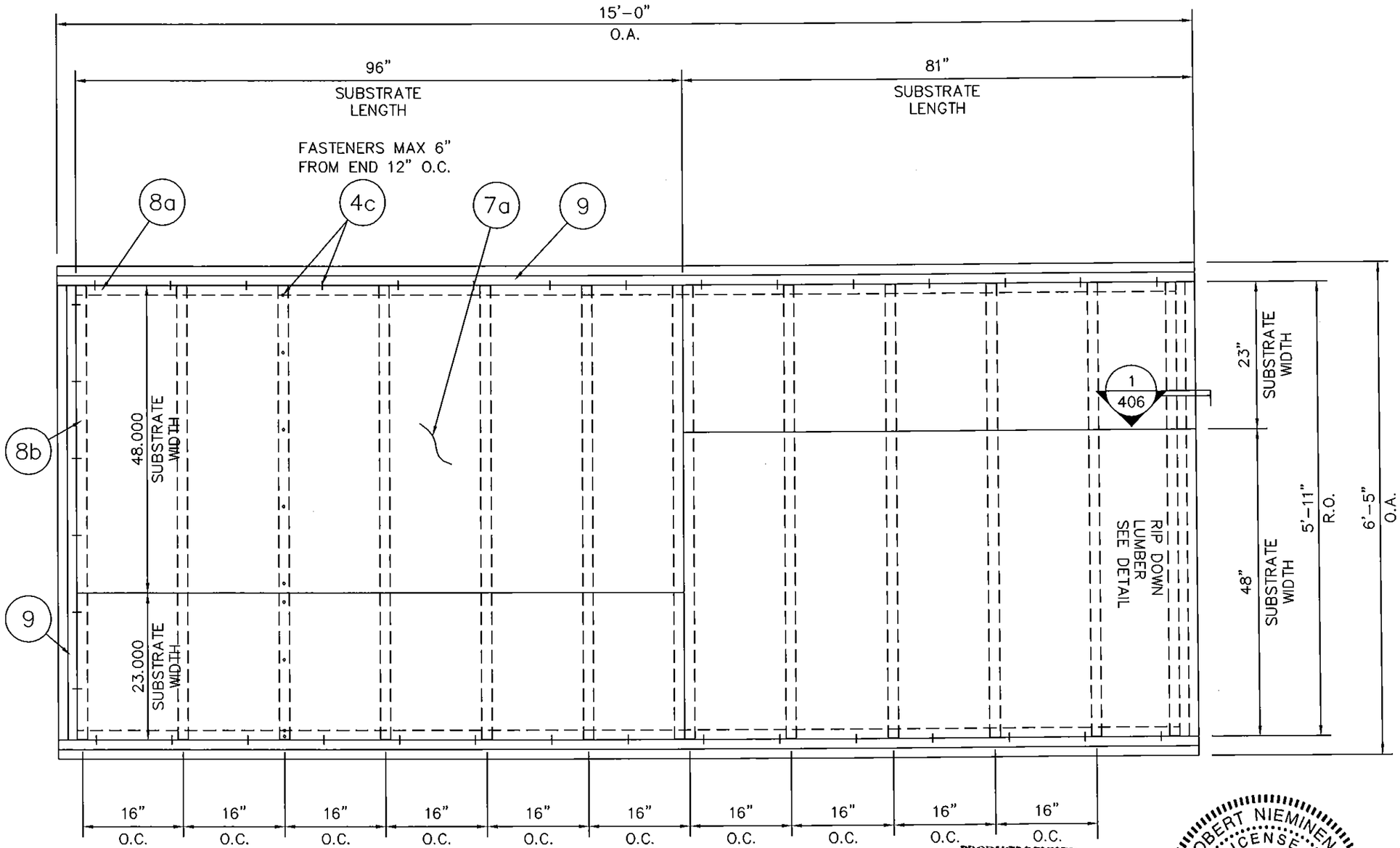

PRODUCT REVISED
as complying with the Florida
Building Code
Acceptance No 15-0114.07
Expiration Date 03/03/2020
By
Miami Dade Product Control

ROBERT NIEMINEN
LICENSE
No 59166
03/30/2015
STATE OF
FLORIDA
PROFESSIONAL ENGINEER

1 / 202 SUBSTRATE ELEVATION
SCALE: 3/4"=1'-0"

03 OF 24 PAGES

NO.	DATE	BY	DESCRIPTION OF REVISIONS
3			
2			
1			
3	2/05/15	LAC	UPDATED COMPANY NAME
2	2/24/09	JRS	ADDED STRUCTURAL ENG. REQ.

** NOTE TO INSTALLER **
These drawings represent Firestone's interpretation of the original contract documents. It is the responsibility of the installer to coordinate these drawings with the actual field conditions and dimensions as well as all other trade and provide Firestone with all panel face dimensions for fabrication. Please note that Firestone will not accept any responsibility for any delays or costs incurred due to changes made after the project has been released for fabrication. Firestone reserves the right to pursue compensation for costs incurred due to any changes made after the release for fabrication date.

Firestone BUILDING PRODUCTS
UNA-CLAD™
1001 LUND BLVD. ANOKA, MINNESOTA 55303
NATIONWIDE 1-800-426-7737 LOCAL (763) 576-8595
Copyright © by Firestone Building Products / UNA-CLAD

PROJECT NAME: MIAMI DADE BUILDING CODES
CUSTOMER NAME: FIRESTONE BUILDING PRODUCTS
PANEL DESCRIPTION: SERIES 1000
DRAWING DESCRIPTION: ELEVATIONS
DATE: 02/05/2015
SCALE FACTOR: 1=16
DRAFTER: LAC
DRAWING NUMBER: NPD2007-006202
PAGE NUMBER: 202

FAB. NUMBER: 13294

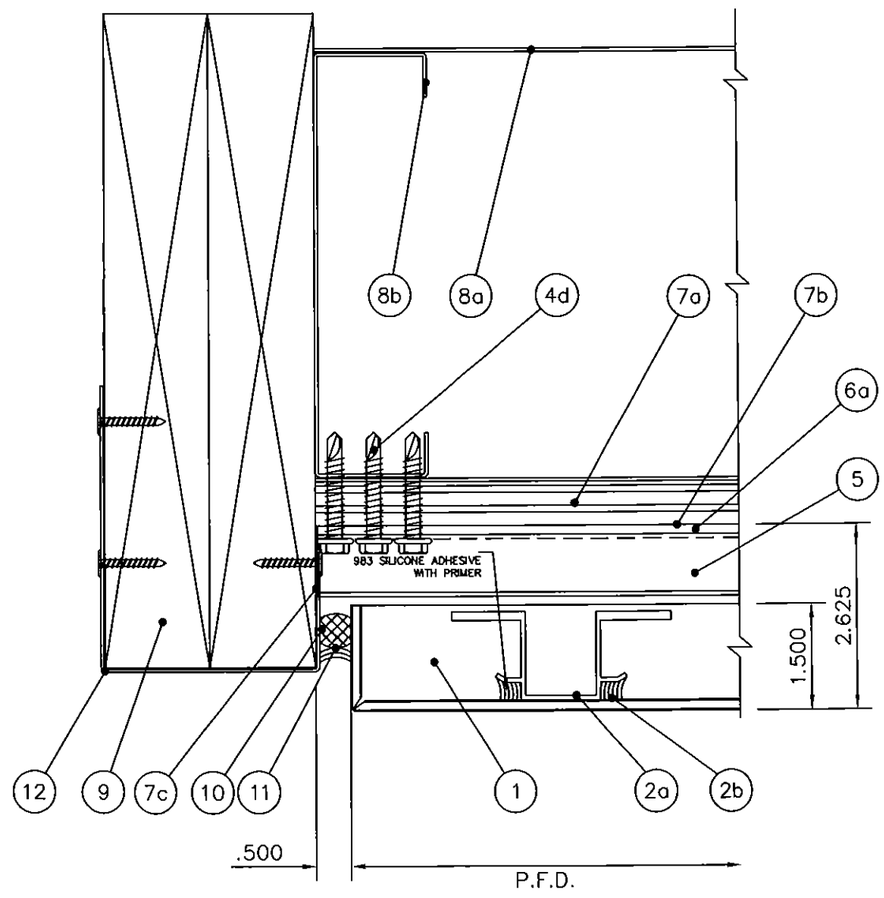

1 / 401 PANEL TERMINATION DETAIL
SCALE: 6"=1'-0"

PRODUCT REVISED
as complying with the Florida Building Code
Acceptance No 15-0114.07
Expiration Date 03/03/2020
By
Miami Dade Product Control

ROBERT NIEMINEN
LICENSE
No 59166
03/30/2015
STATE OF FLORIDA
PROFESSIONAL ENGINEER

04 OF 24 PAGES

NO.	DATE	BY	DESCRIPTION OF REVISIONS
5			
4			
3			
2	2/05/15	LAC	UPDATED COMPANY NAME
1	2/24/09	JRS	ADDED STRUCTURAL ENG. REQ.

** NOTE TO INSTALLER **
These drawings represent Firestones' interpretation of the original architectural drawings. It is the responsibility of the installer to coordinate these drawings with the actual field conditions and dimensions as well as other trades and provide Firestone with all panel face dimensions for fabrication. Please note that Firestone will not accept any responsibility for any delays or costs incurred due to changes made after the project has been released for fabrication. Firestone reserves the right to pursue compensation for costs incurred due to any changes made after the release for fabrication date.

Firestone BUILDING PRODUCTS
UNA-CLAD
1001 LUND BLVD. ANOKA, MINNESOTA 55303
NATIONWIDE: 1-800-428-7737 LOCAL (763) 576-0595
Copyright © by Firestone Building Products / UNA-CLAD

PROJECT NAME: MIAMI DADE BUILDING CODES
CUSTOMER NAME: FIRESTONE BUILDING PRODUCTS
PANEL DESCRIPTION: SERIES 1000
DRAWING DESCRIPTION: DETAILS
DATE: 02/05/2015
SCALE FACTOR: 1=2
DRAFTER: JRS
DRAWING NUMBER: NPD2007-006401
PAGE NUMBER: 401

FAB. NUMBER: 13294

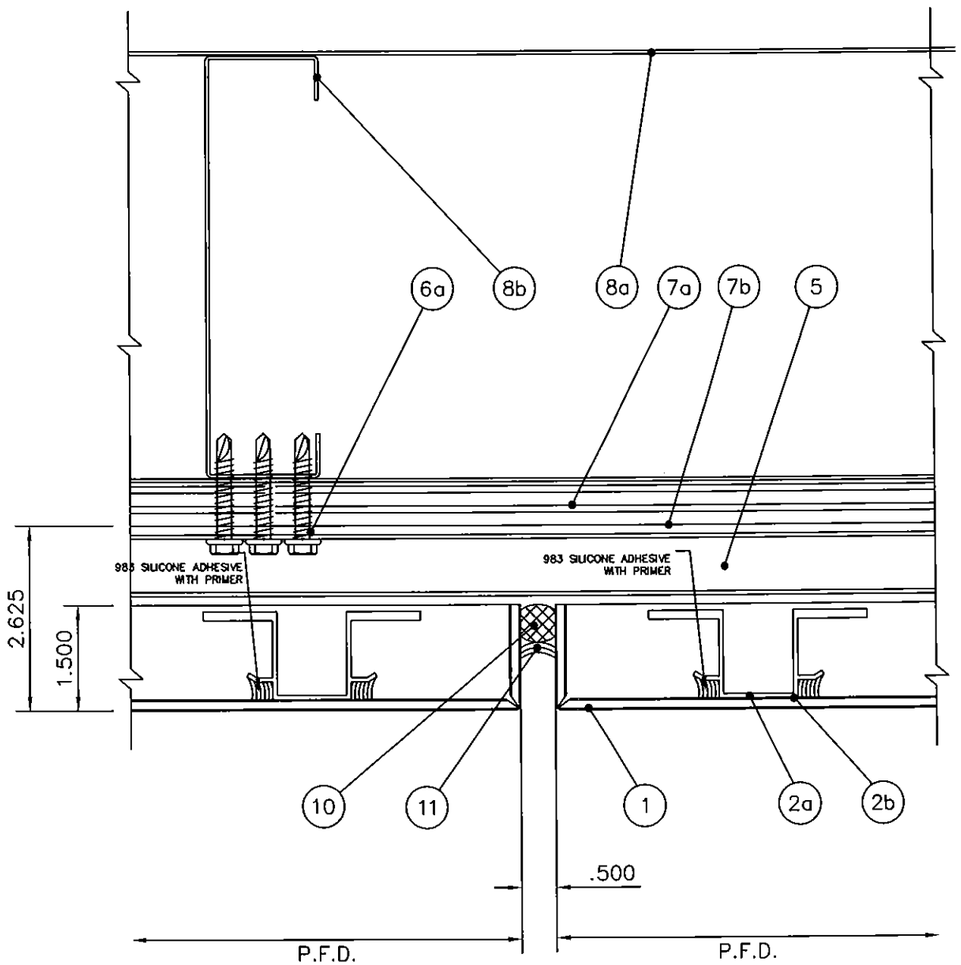

1 / 402 TYP. VERTICAL JOINT DETAIL
SCALE: 6"=1'-0"

PRODUCT REVISED
as complying with the Florida Building Code
Acceptance No 15-0114.07
Expiration Date 03/03/2020
By
Miami Dade Product Control

ROBERT NIEMINEN
LICENSE
No 59166
03/3/2015
STATE OF FLORIDA
PROFESSIONAL ENGINEER

05 OF 24 PAGES

NO.	DATE	BY	DESCRIPTION OF REVISIONS
3	12/05/15	LAC	UPDATED COMPANY NAME
2	12/24/09	JRS	ADDED STRUCTURAL ENG. REQ.
1			

** NOTE TO INSTALLER **
These drawings represent Firestones' interpretation of the original architectural drawings. It is the responsibility of the installer to coordinate these drawings with the actual field conditions and dimensions as well as all other trade and provide Firestone Firestone will not accept any responsibility for any delays or costs incurred due to changes made after the project has been released for fabrication. Firestone reserves the right to pursue compensation for costs incurred due to any changes made after the release for fabrication date.

Firestone
BUILDING PRODUCTS
UNA-CLAD™
1001 LUND BLVD. ANOKA, MINNESOTA 55303
NATIONWIDE 1-800-426-7737 LOCAL (763) 576-5595
Copyright © by Firestone Building Products / UNA-CLAD

PROJECT NAME: MIAMI DADE BUILDING CODES
CUSTOMER NAME: FIRESTONE BUILDING PRODUCTS
PANEL DESCRIPTION: SERIES 1000
DRAWING DESCRIPTION: DETAILS

DATE: 02/05/2015
SCALE FACTOR: 1=2
DRAFTER: LAC
DRAWING NUMBER: NPD2007-006402
PAGE NUMBER: 402

FAB. NUMBER: 13294

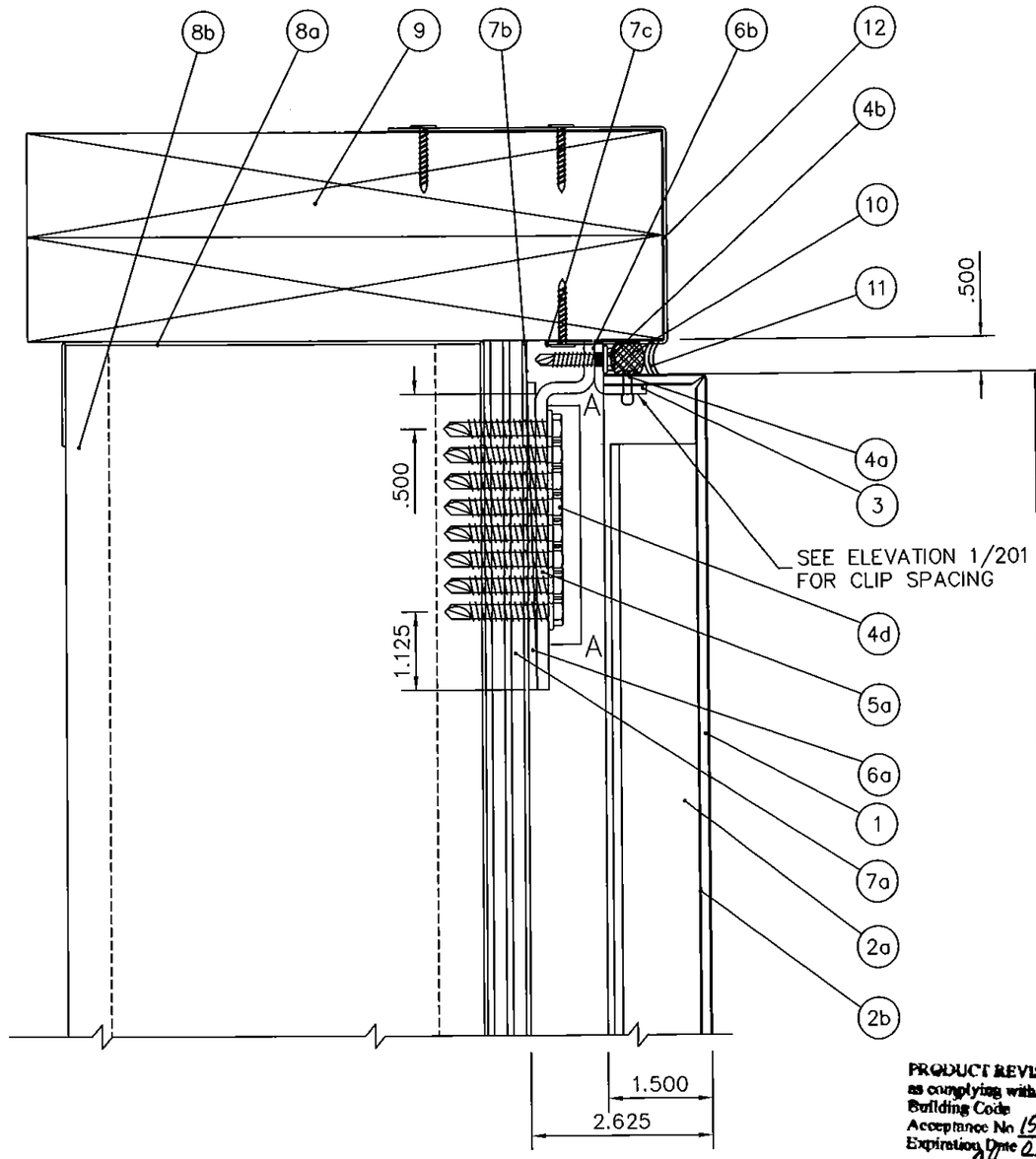

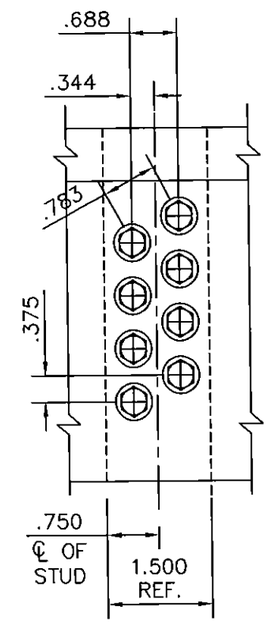

SECTION A–A

PRODUCT REVISED
as complying with the Florida
Building Code
Acceptance No 15-0114.07
Expiration Date 03/03/2020
By
Miami Dade Product Control

ROBERT NIEMINEN
LICENSE
No 89166
03/30/2015
STATE OF
FLORIDA
PROFESSIONAL ENGINEER

1 / 403 HEAD TERMIATION DETAIL
SCALE: 6"=1'-0"

06 OF 24 PAGES

NO.	DATE	BY	DESCRIPTION OF REVISIONS
3	2/05/15	LAC	UPDATED COMPANY NAME
2	2/24/09	JRS	ADDED STRUCTURAL ENG. REQ.

** NOTE TO INSTALLER **
These drawings represent Firestone's interpretation of the original architectural drawings. It is the responsibility of the installer to coordinate these drawings with the actual field conditions and dimensions as well as all other trade and provide Firestone with all panel face dimensions for fabrication. Please note that Firestone will not accept any responsibility for any delays or costs incurred due to changes made after the project has been released for fabrication. Firestone reserves the right to charge customer for costs incurred due to any changes made after the release for fabrication date.

Firestone BUILDING PRODUCTS
UNA-CLAD
1001 LUND BLVD. ANOKA, MINNESOTA 55303
NATIONWIDE 1-800-426-7737 LOCAL (763) 576-9595
Copyright © by Firestone Building Products / UNA-CLAD

PROJECT NAME: MIAMI DADE BUILDING CODES
CUSTOMER NAME: FIRESTONE BUILDING PRODUCTS
PANEL DESCRIPTION: SERIES 1000
DRAWING DESCRIPTION: DETAILS
DATE: 02/05/2015
SCALE FACTOR: 1=2
DRAFTER: LCA
DRAWING NUMBER: NPD2007-006403
PAGE NUMBER: 403

FAB. NUMBER: 13294

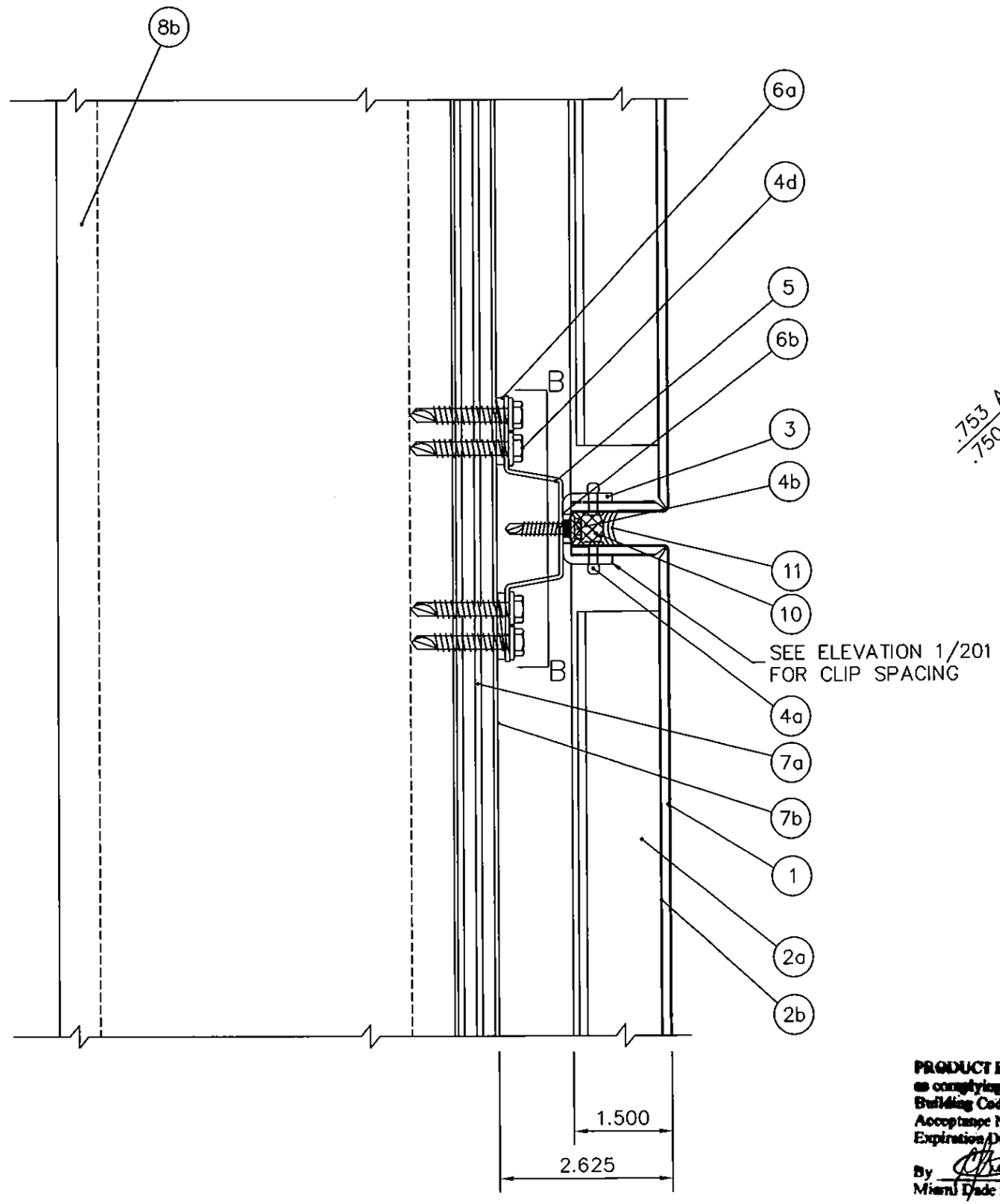

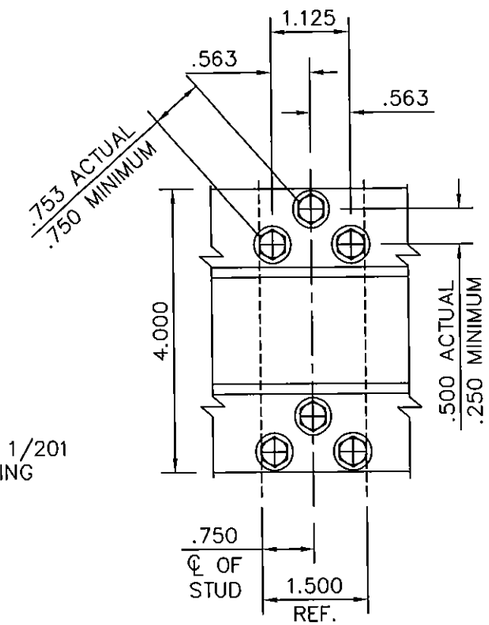

SECTION B–B

PRODUCT REVISED
as complying with the Florida
Building Code
Acceptance No 15-0114.07
Expiration Date 03/03/2020
By
Miami Dade Product Control

ROBERT NIEMINEN
LICENSE
No. 59166
03/30/2015
STATE OF
FLORIDA
PROFESSIONAL ENGINEER

1 / 404 TYP. HORZ. JOINT DETAIL
SCALE: 6"=1'-0"

07 OF 24 PAGES

NO.	DATE	BY	DESCRIPTION OF REVISIONS
3			
4			
5			
6	2/05/15	LAC	UPDATED COMPANY NAME
1	2/24/09	JRS	ADDED STRUCTURAL ENG. REQ.

** NOTE TO INSTALLER **
These drawings represent Firestone interpretation of the original architectural drawings. It is the responsibility of the installer to coordinate these drawings with the actual field conditions and dimensions as well as all other trade and provide Firestone with all panel face dimensions for fabrication. Please note that Firestone will not accept any responsibility for any delays or costs incurred due to changes made after the project has been released for fabrication. Firestone reserves the right to pursue compensation for costs incurred due to any changes made after the release for fabrication date.

Firestone BUILDING PRODUCTS
UNI-CLAD
1001 LUND BLVD. ANOKA, MINNESOTA 55303
NATIONWIDE 1-800-428-7737 LOCAL (763) 576-0595
Copyright © by Firestone Building Products / UNI-CLAD

PROJECT NAME: MIAMI DADE BUILDING CODES
CUSTOMER NAME: FIRESTONE BUILDING PRODUCTS
PANEL DESCRIPTION: SERIES 1000
DRAWING DESCRIPTION: DETAILS
DATE:
SCALE FACTOR: 1=2
DRAFTER: LAC
DRAWING NUMBER: NPD2007-006404
PAGE NUMBER: 404

FAB. NUMBER: 13294

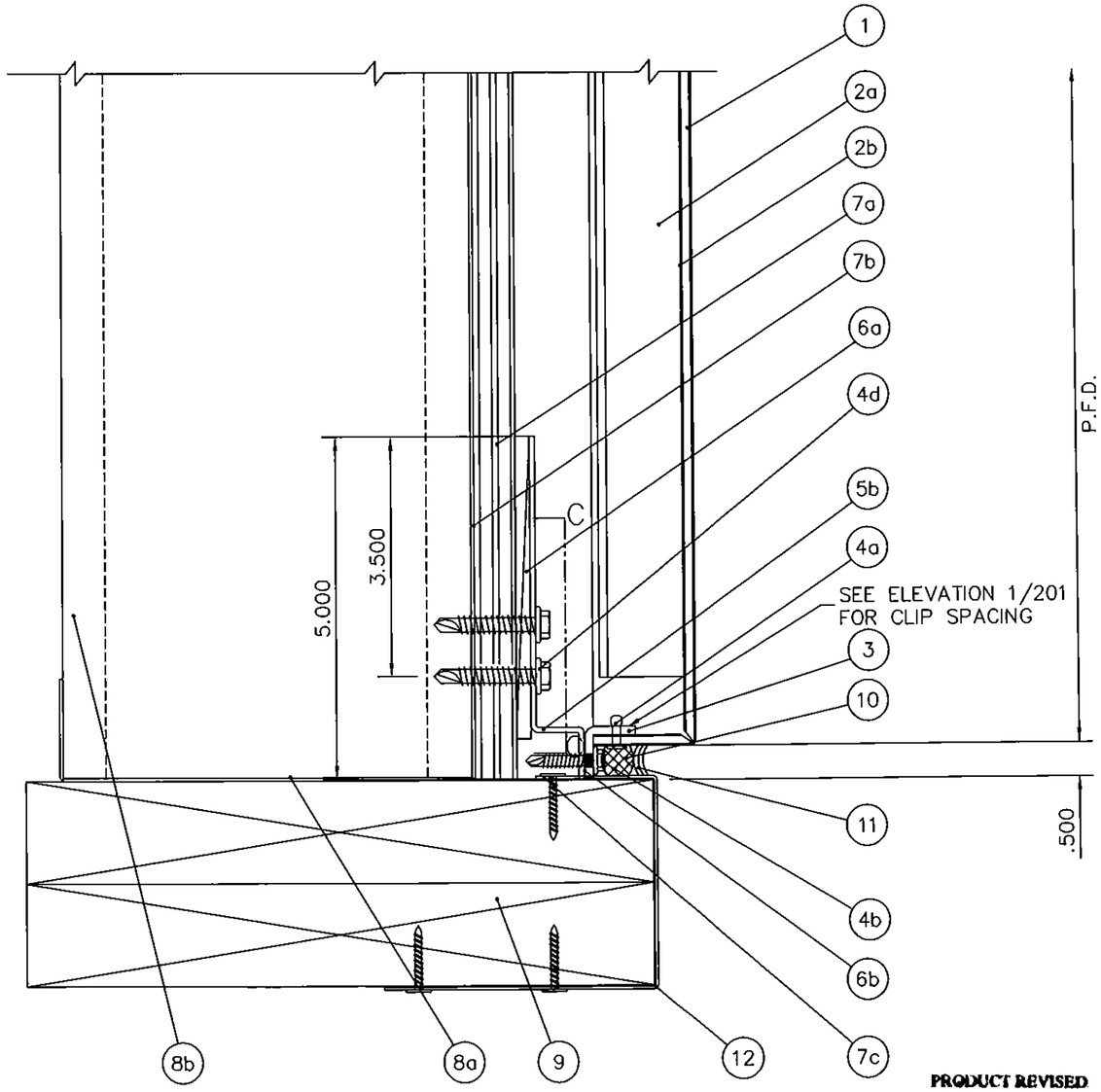

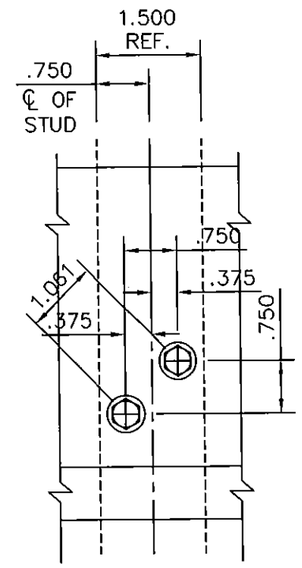

SECTION C–C

PRODUCT REVISED
as complying with the Florida Building Code
Acceptance No 15-0114.07
Expiration Date 03/03/2020
By [signature]
Miami Dade Product Control

ROBERT NIEMINEN
LICENSE
No 59166
03/30/2015
STATE OF FLORIDA
PROFESSIONAL ENGINEER

1 / 405 BASE TERMINATION DETAIL
SCALE: 6"=1'-0"

08 OF 24 PAGES

NO.	DATE	BY	DESCRIPTION OF REVISIONS
5			
4			
3			
2	2/05/15	LAC	UPDATED COMPANY NAME
1	2/24/09	JRS	ADDED STRUCTURAL ENG. REQ.

** NOTE TO INSTALLER **
These drawings represent Firestone's interpretation of the original architectural drawings. It is the responsibility of the installer to coordinate these drawings with the actual field conditions and dimensions as well as all other trade and provide Firestone with all panel face dimensions for fabrication. Please note that Firestone will not accept any responsibility for any delays or costs incurred due to changes made after the project has been released for fabrication. Firestone reserves the right to pursue compensation for costs incurred due to any changes made after the release for fabrication date.

Firestone BUILDING PRODUCTS
UNA-CLAD
1001 LUND BLVD. ANOKA, MINNESOTA 55303
NATIONWIDE 1-800-426-7737 LOCAL (763) 576-9595

Copyright © by Firestone Building Products / UNA-CLAD

PROJECT NAME: MIAMI DADE BUILDING CODES
CUSTOMER NAME: FIRESTONE BUILDING PRODUCTS
PANEL DESCRIPTION: SERIES 1000
DRAWING DESCRIPTION: DETAILS
DATE:
SCALE FACTOR: 1=2
DRAFTER: LAC
DRAWING NUMBER: NPD2007-006405
PAGE NUMBER: 405

FAB. NUMBER: 13294

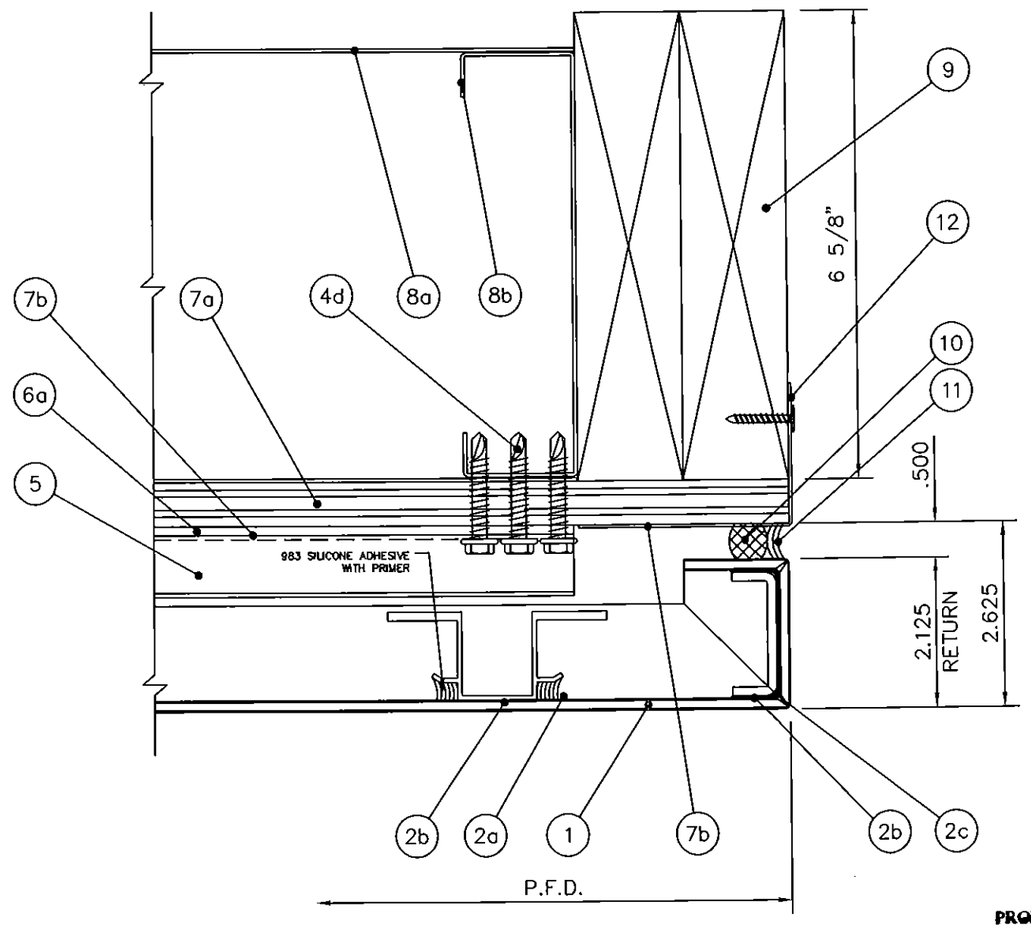

PRODUCT REVISED
as complying with the Florida
Building Code
Acceptance No 15-0114.07
Expiration Date 03/03/2020
By
Miami Dade Product Control

ROBERT NIEMINEN
LICENSE
No. 59166
03/30/2015
STATE OF
FLORIDA
PROFESSIONAL ENGINEER

1 / 406 OUTSIDE CORNER DETAIL
SCALE: 6"=1'-0"

09 OF 24 PAGES

** NOTE TO INSTALLER **

These drawings represent Firestone's interpretation of the original architectural drawings. It is the responsibility of the installer to coordinate these drawings with the actual field conditions and dimensions and with other trade and provide Firestone with all panel face dimensions for fabrication. Please note that Firestone will not accept any responsibility for any delays or costs incurred due to changes made after the project has been released for fabrication. Firestone reserves the right to pursue compensation for costs incurred due to any changes made after the release for fabrication date.

NO.	DATE	BY	DESCRIPTION OF REVISIONS
5			
4			
3			
2	2/05/15	LAC	UPDATED COMPANY NAME
1	2/24/08	JRS	ADDED STRUCTURAL ENG. REQ.

Firestone BUILDING PRODUCTS
UNI-CLAD
1001 LUND BLVD. ANOKA, MINNESOTA 55303
NATIONWIDE 1-800-428-7737 LOCAL (763) 576-9595
Copyright © by Firestone Building Products / UNI-CLAD

PROJECT NAME: MIAMI DADE BUILDING CODES
CUSTOMER NAME: FIRESTONE BUILDING PRODUCTS
PANEL DESCRIPTION: SERIES 1000
DRAWING DESCRIPTION: DETAILS

DATE: 02/05/2015
SCALE FACTOR: 1=2
DRAFTER: LAC
DRAWING NUMBER: NPD2007-006406
PAGE NUMBER: 406

FAB. NUMBER: 13294

LOCATE CLIPS 15" O.C.

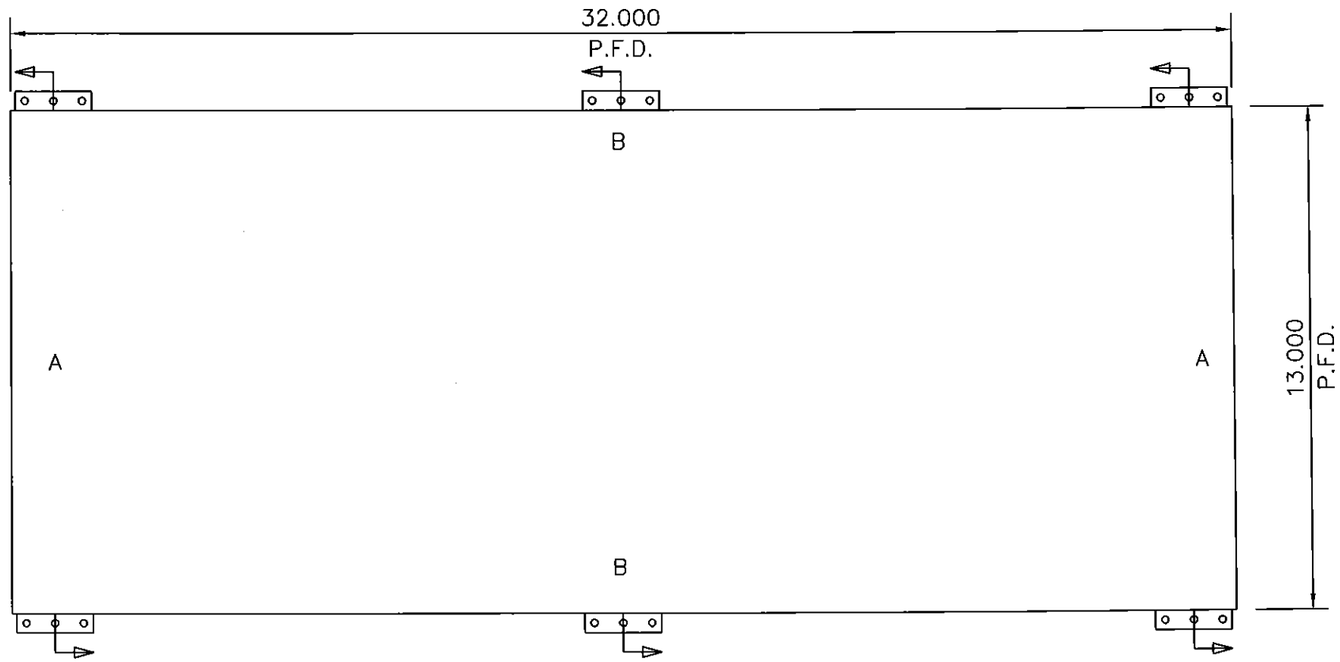

FACE = + 1.430

TOP

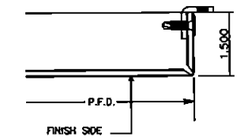

DETAIL B

FACE = + 1.430

BOTTOM

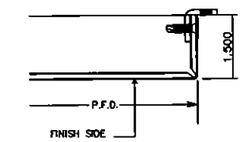

DETAIL B

FACE = + 1.430

LEFT

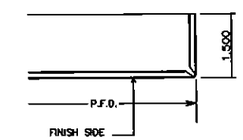

DETAIL A

FACE = + 1.430

RIGHT

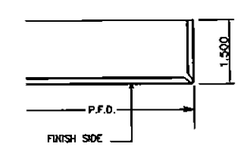

DETAIL A

PRODUCT REVISED
as complying with the Florida
Building Code
Acceptance No 15-0114.07
Expiration Date 03/03/2020
By
Miami Dade Product Control

ROBERT NIEMINEN
LICENSE
No 59166
03/30/2015
STATE OF FLORIDA
PROFESSIONAL ENGINEER

FINISH SIDE UP
1001
GRAIN DIRECTION

10 OF 24 PAGES

Deflection Criteria: L/60 Windload: 120 P.S.F. Maximum Clip Spacing: 15 inches

Firestone
BUILDING PRODUCTS
UNA-CLAD
NATIONWIDE 1-800-426-7737 LOCAL (763) 576-9595
Copyright © by Firestone Building Products / UNA-CLAD

PANEL DESCRIPTION SERIES 1000

PANEL NUMBER	QTY.	WIDTH	LENGTH
1001	4	13.000	32.000

PFD = PANEL FACE DIMENSION

CUSTOMER: FIRESTONE BUILDING PRODUCTS		DRAWN BY: LAC
FAB NUMBER: 13294	RELEASE: 1	SCALE: 1=4
MATERIAL: Composite		DATE: 02/05/2015
THICKNESS: 4mm	DRAWING NO. NPD2007-006 REL1 PN1001.dwg	
FINISH: Bone White	PRE: ☒ POST: ☐	PAGE NO. 1 of 4

LOCATE CLIPS 15" O.C.

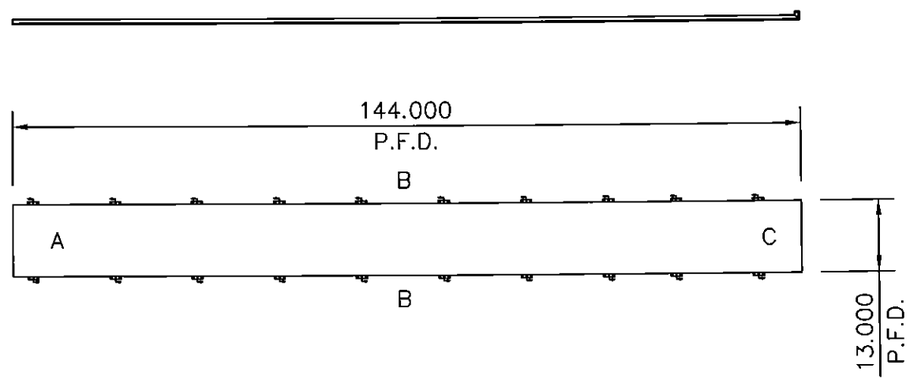

FACE = + 1.430

TOP

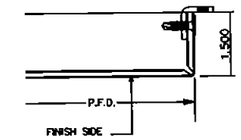

DETAIL B

FACE = + 1.430

BOTTOM

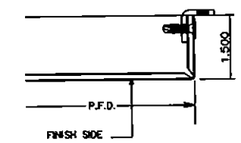

DETAIL B

FACE = + 1.430

LEFT

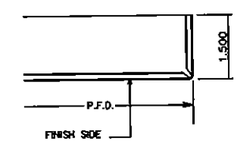

DETAIL A

FACE = + 3.485

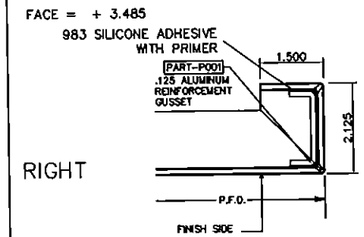

RIGHT

DETAIL C

PRODUCT REVISED
as complying with the Florida Building Code
Acceptance No 15-0114.07
Expiration Date 03/03/2020
By
Miami Dade Product Control

ROBERT NIEMINEN
LICENSE
No 59166
03/30/2015
STATE OF FLORIDA
PROFESSIONAL ENGINEER

FINISH SIDE UP
1002
GRAIN DIRECTION

11 OF 24 PAGES

Deflection Criteria: L/60 Windload: 120 P.S.F. Maximum Clip Spacing: 15 inches

Firestone BUILDING PRODUCTS
UNA-CLAD
NATIONWIDE 1-800-426-7737 LOCAL (763) 576-9595
Copyright © by Firestone Building Products / UNA-CLAD

PANEL DESCRIPTION SERIES 1000

PANEL NUMBER	QTY.	WIDTH	LENGTH
1002	4	13.000	144.000

PFD = PANEL FACE DIMENSION

CUSTOMER: FIRESTONE BUILDING PRODUCTS		DRAWN BY: LAC
FAB NUMBER: 13294	RELEASE: 1	SCALE: 1=28
MATERIAL: Composite		DATE: 02/05/2015
THICKNESS: 4mm	DRAWING NO. NPD2007-006 REL1 PN1002.dwg	
FINISH: Bone White	PRE: ☒ POST: ☐	PAGE NO. 2 of 4

LOCATE CLIPS 5" O.C.

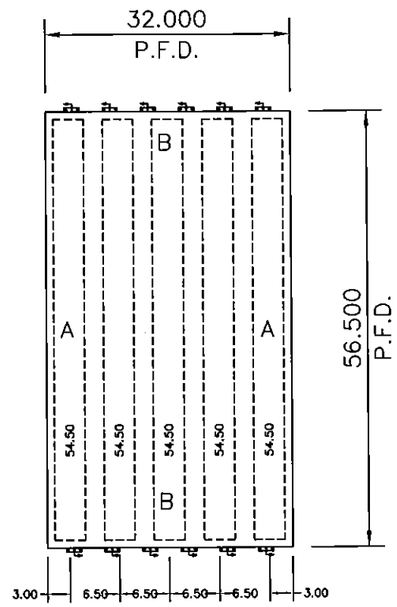

FACE = + 1.430

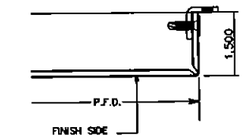

TOP

DETAIL B

FACE = + 1.430

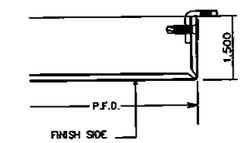

BOTTOM

DETAIL B

FACE = + 1.430

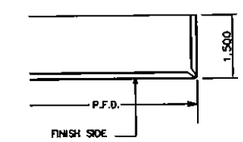

LEFT

DETAIL A

FACE = + 1.430

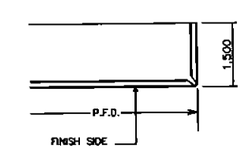

RIGHT

DETAIL A

PRODUCT REVISED
as complying with the Florida
Building Code
Acceptance No 15-0114.07
Expiration Date 03/03/2020
By
Miami Dade Product Control

ROBERT NIEMINEN
LICENSE
No 59168
03/30/2015
STATE OF
FLORIDA
PROFESSIONAL ENGINEER

FINISH SIDE UP
1003
GRAIN DIRECTION

12 OF 24 PAGES

Deflection Criteria: L/60 Windload: 120 P.S.F. Maximum Clip Spacing: 5 inches

Firestone
BUILDING PRODUCTS
UNA-CLAD
NATIONWIDE 1-800-426-7737 LOCAL (763) 576-9595
Copyright © by Firestone Building Products / UNA-CLAD

PANEL DESCRIPTION SERIES 1000

PANEL NUMBER	QTY.	WIDTH	LENGTH
1003	4	56.500	32.000

PFD = PANEL FACE DIMENSION

CUSTOMER: FIRESTONE BUILDING PRODUCTS		DRAWN BY: LAC
FAB NUMBER: 13294	RELEASE: 1	SCALE: 1=20
MATERIAL: Composite		DATE: 02/05/2015
THICKNESS: 4mm	DRAWING NO. NPD2007-006 REL1 PN1003.dwg	
FINISH: Bone White	PRE: ☒ POST: ☐	PAGE NO. 3 of 4

LOCATE CLIPS 5" O.C.

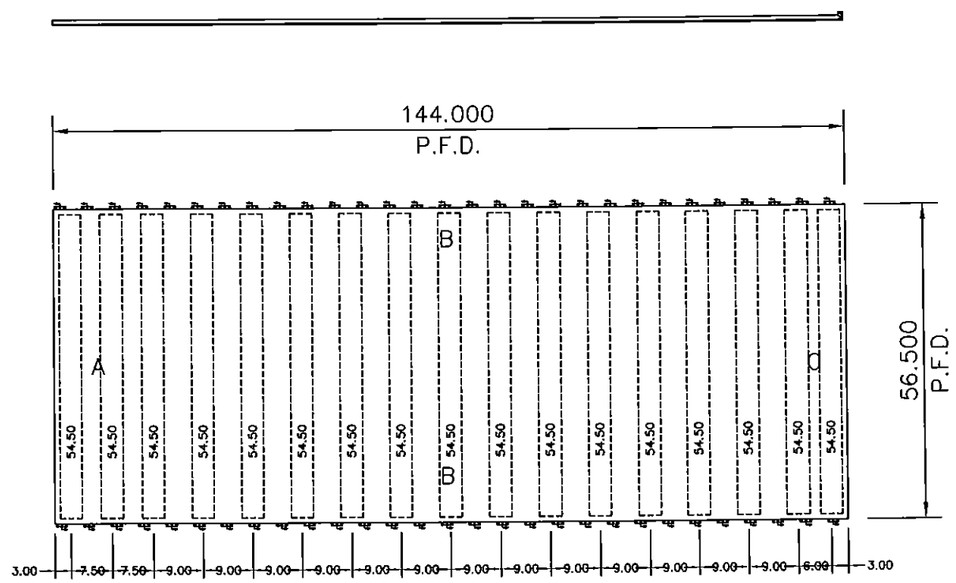

FACE = + 1.430

TOP

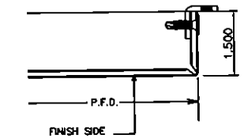

DETAIL B

FACE = + 1.430

BOTTOM

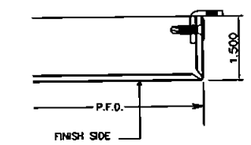

DETAIL B

FACE = + 1.430

LEFT

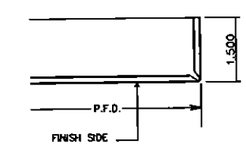

DETAIL A

FACE = + 3.485

RIGHT

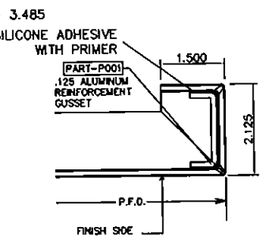

DETAIL C

PRODUCT REVISED
as complying with the Florida
Building Code
Acceptance No 15-0114.07
Expiration Date 03/03/2020
By
Miami Dade Product Control

ROBERT NIEMINEN
LICENSE
No. 59166
03/30/2015
STATE OF
FLORIDA
PROFESSIONAL ENGINEER

FINISH SIDE UP
1004
GRAIN DIRECTION

13 OF 24 PAGES

Deflection Criteria: L/60 Windload: 120 P.S.F. Maximum Clip Spacing: 20 inches w/ 16ga metal substrate

Firestone
BUILDING PRODUCTS
UNA-CLAD
NATIONWIDE 1-800-426-7737 LOCAL (763) 576-9595
Copyright © by Firestone Building Products / UNA-CLAD

PANEL DESCRIPTION SERIES 1000

PANEL NUMBER	QTY.	WIDTH	LENGTH
1004	4	56.500	144.000

PFD = PANEL FACE DIMENSION

CUSTOMER: FIRESTONE BUILDING PRODUCTS		DRAWN BY: LAC
FAB NUMBER: 13294	RELEASE: 1	SCALE: 1=28
MATERIAL: Composite		DATE: 02/05/2015
THICKNESS: 4mm	DRAWING NO. NPD2007-006 REL1 PN1004.dwg	
FINISH: Bone White	PRE: ☒ POST: ☐	PAGE NO. 4 of 4

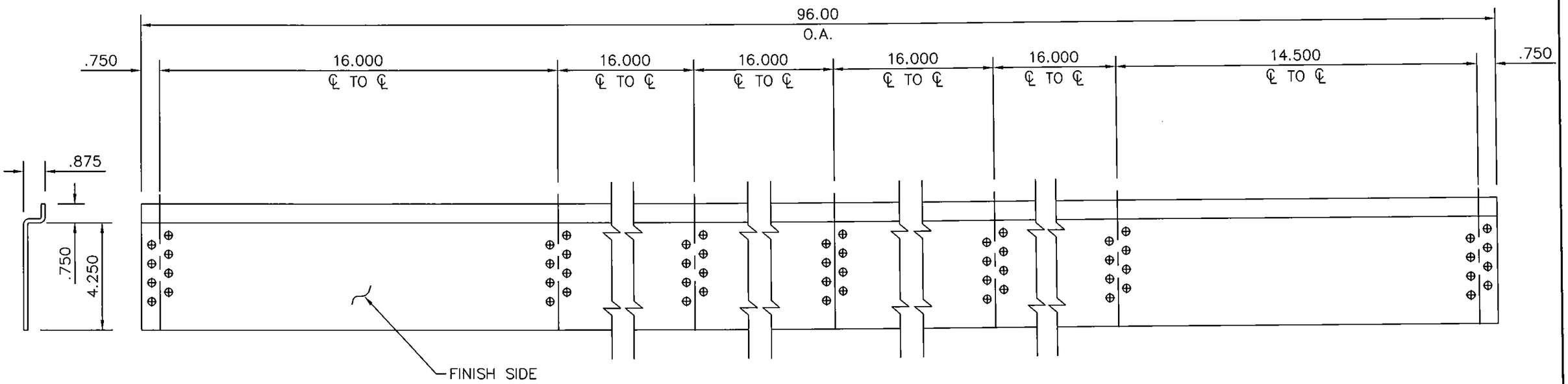

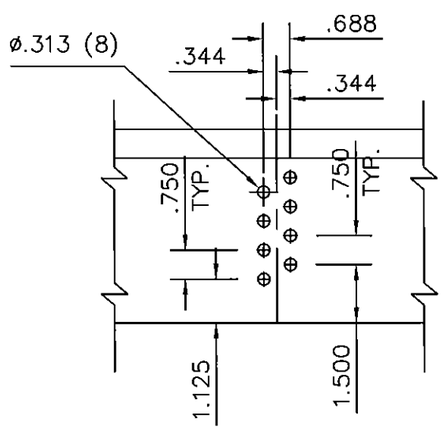

DESCRIPTION	"Z" SUBGRIT			
PART #	QTY.	LENGTH	FIELD APPLIED	SHOP APPLIED
P001	4	96.00		X

ROBERT NIEMINEN
LICENSE
No 59166
03/30/2015
STATE OF FLORIDA
PROFESSIONAL ENGINEER

PRODUCT REVISED
as complying with the Florida Building Code
Acceptance No 15-0114.07
Expiration Date 03/03/2020
By
Miami-Dade Product Control

14 OF 24 PAGES

Firestone
BUILDING PRODUCTS
UNA-CLAD
NATIONWIDE 1-800-426-7737 LOCAL (763) 576-9595
Copyright © by Firestone Building Products / UNA-CLAD

PANEL DESCRIPTION Series 1000

PANEL NUMBER	QTY.	WIDTH	LENGTH

PFD = PANEL FACE DIMENSION

CUSTOMER: FIRESTONE BUILDING PRODUCTS		DRAWN BY: LAC
FAB NUMBER: 13294	RELEASE: 1	SCALE: 1=4
MATERIAL: GALV. STEEL		DATE: 02/05/2015
THICKNESS: 8 Ga. (0.164)	DRAWING NO. NPD2007-006 Rel1 P001.dwg	
FINISH: N/A	PRE: ☐ POST ☐	PAGE NO. P1

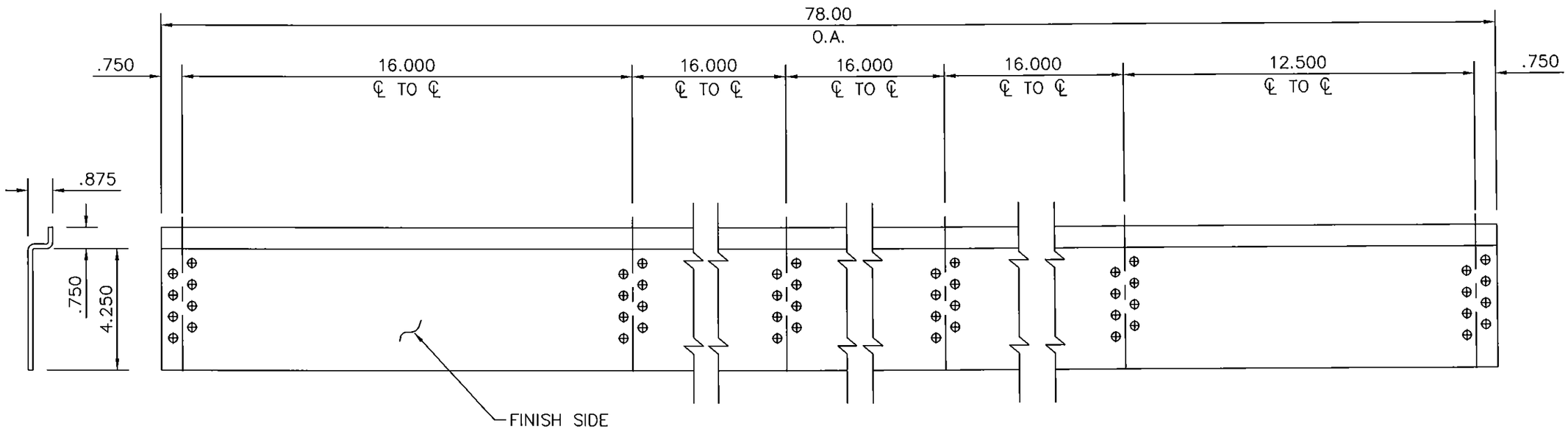

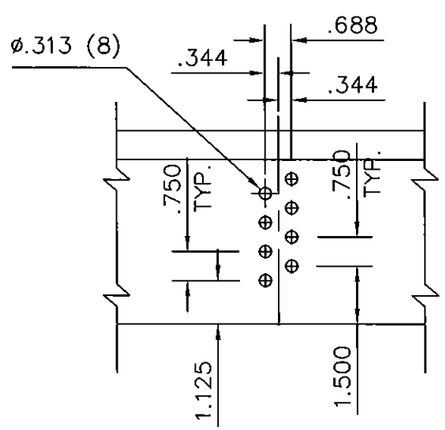

DESCRIPTION	"Z" REINFORCEMENT			
PART #	QTY.	LENGTH	FIELD APPLIED	SHOP APPLIED
P002	4	78.00		X

PRODUCT REVISED
as complying with the Florida Building Code
Acceptance No 15-0114.07
Expiration Date 03/03/2020
By
Miami Dade Product Control

ROBERT NIEMINEN
LICENSE
No. 59166
03/30/2015
STATE OF
FLORIDA
PROFESSIONAL ENGINEER

15 OF 24 PAGES

Firestone BUILDING PRODUCTS
UNA-CLAD
NATIONWIDE 1-800-426-7737 LOCAL (763) 576-9595
Copyright © by Firestone Building Products / UNA-CLAD

PANEL DESCRIPTION Series 1000

PANEL NUMBER	QTY.	WIDTH	LENGTH

PFD = PANEL FACE DIMENSION

CUSTOMER: FIRESTONE BUILDING PRODUCTS		DRAWN BY: LAC
FAB NUMBER: 13294	RELEASE: 1	SCALE: 1=4
MATERIAL: GALV. STEEL		DATE: 02/05/2015
THICKNESS: 8 Ga. (0.164)	DRAWING NO. NPD2007-006 Rel1 P002.dwg	
FINISH: N/A	PRE: ☐ POST ☐	PAGE NO. P2

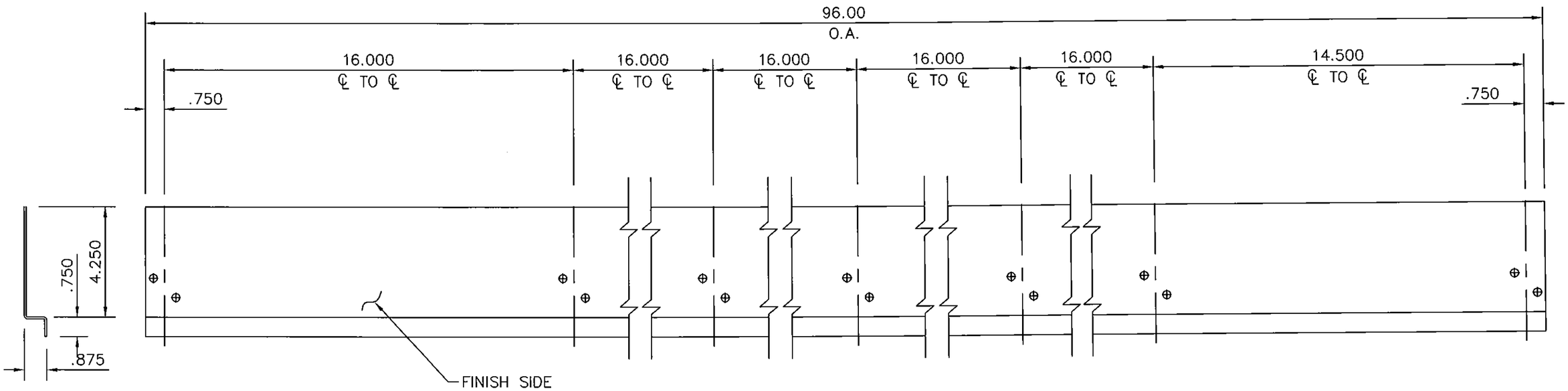

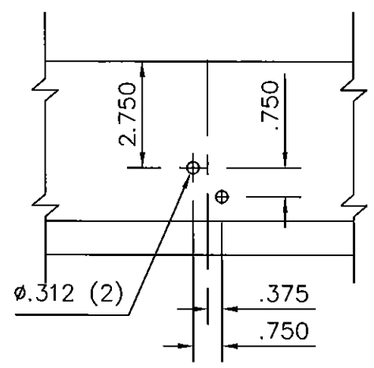

DESCRIPTION	"Z" SUBGRIT			
PART #	QTY.	LENGTH	FIELD APPLIED	SHOP APPLIED
P003	4	96.00		X

PRODUCT REVISED
as complying with the Florida
Building Code
Acceptance No 15-0114.07
Expiration Date 03/03/2020
By
Miami Dade Product Control

ROBERT NIEMINEN
LICENSE
No 59106
03/30/2015
STATE OF
FLORIDA
PROFESSIONAL ENGINEER

16 OF 24 PAGES

Firestone
BUILDING PRODUCTS
UNA-CLAD
NATIONWIDE 1-800-426-7737 LOCAL (763) 576-9595
Copyright © by Firestone Building Products / UNA-CLAD

PANEL DESCRIPTION Series 1000

PANEL NUMBER	QTY.	WIDTH	LENGTH

PFD = PANEL FACE DIMENSION

CUSTOMER: FIRESTONE BUILDING PRODUCTS		DRAWN BY: LAC
FAB NUMBER: 13294	RELEASE: 1	SCALE: 1=4
MATERIAL: GALV. STEEL		DATE: 02/05/2015
THICKNESS: 14 Ga. (0.075)	DRAWING NO. NPD2007-006 Rel1 P003.dwg	
FINISH: N/A	PRE: ☐ POST ☐	PAGE NO. P3

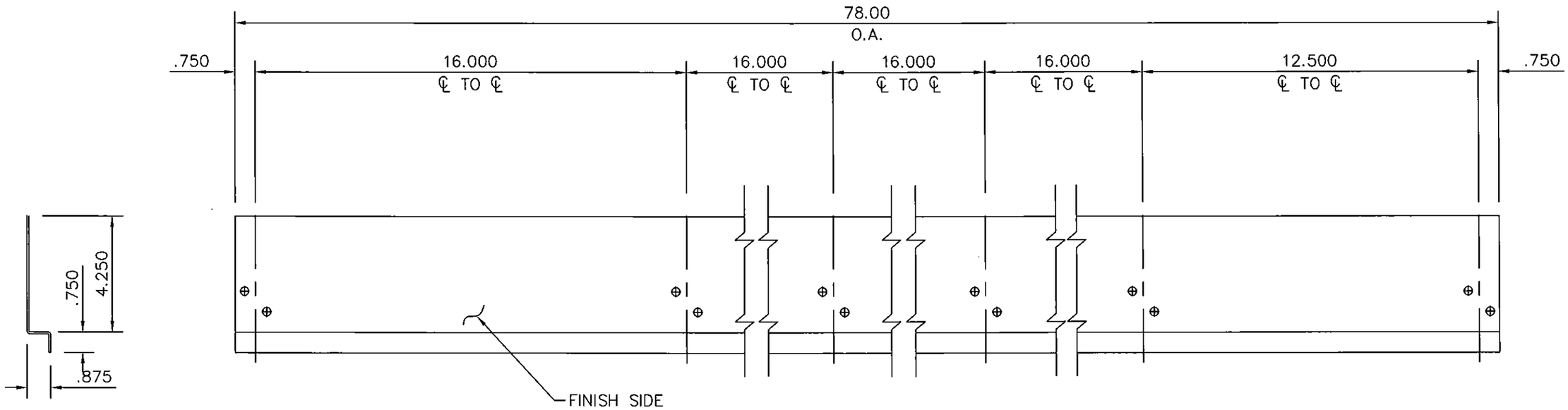

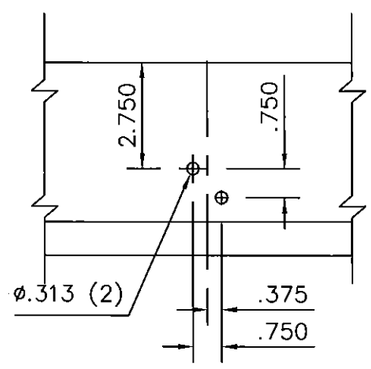

DESCRIPTION	"Z" SUBGRIT			
PART #	QTY.	LENGTH	FIELD APPLIED	SHOP APPLIED
P004	4	78.00		X

PRODUCT REVISED
as complying with the Florida Building Code
Acceptance No 15-0114.07
Expiration Date 03/03/2020
By
Miami Dade Product Control

ROBERT NIEMINEN
LICENSE
No 59186
03/30/2015
STATE OF
FLORIDA
PROFESSIONAL ENGINEER

17 OF 24 PAGES

Firestone
BUILDING PRODUCTS
UNA-CLAD
NATIONWIDE 1-800-426-7737 LOCAL (763) 576-9595
Copyright © by Firestone Building Products / UNA-CLAD

PANEL DESCRIPTION Series 1000

PANEL NUMBER	QTY.	WIDTH	LENGTH

PFD = PANEL FACE DIMENSION

CUSTOMER: FIRESTONE BUILDING PRODUCTS		DRAWN BY: LAC
FAB NUMBER: 13294	RELEASE: 1	SCALE: 1=4
MATERIAL: GALV. STEEL		DATE: 02/05/2015
THICKNESS: 14 Ga. (0.075)	DRAWING NO. NPD2007-006 Rel1 P004.dwg	
FINISH: N/A	PRE: ☐ POST ☐	PAGE NO. P4

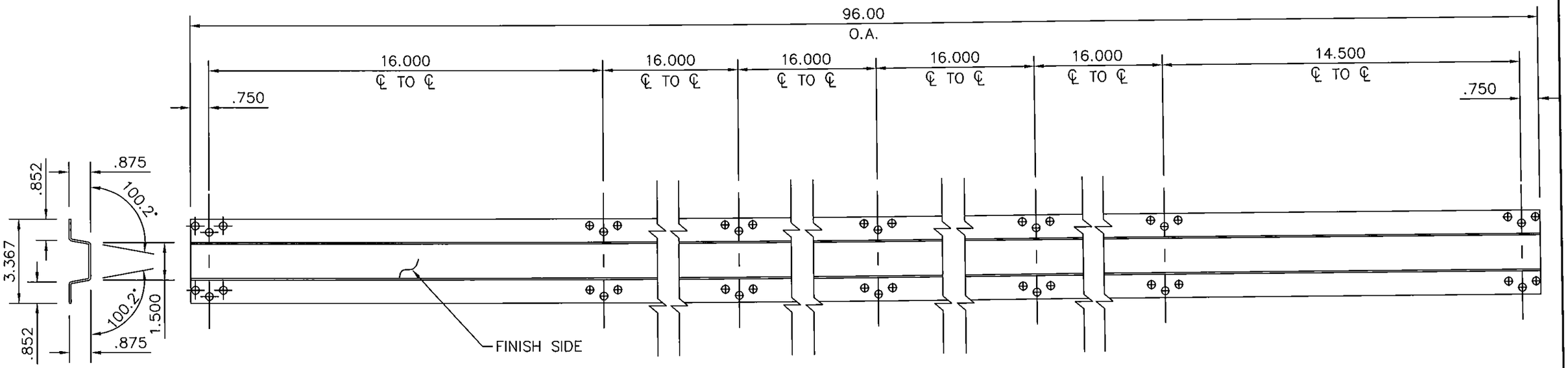

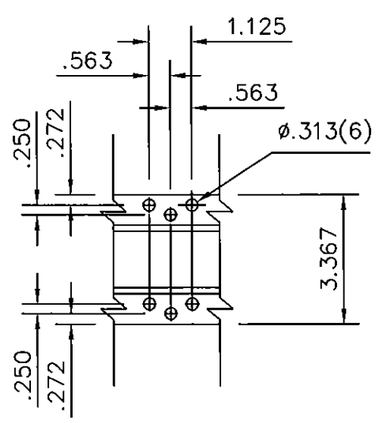

DESCRIPTION	HAT CHANNEL			
PART #	QTY.	LENGTH	FIELD APPLIED	SHOP APPLIED
P005	4	96.00		X

PRODUCT REVISED
as complying with the Florida Building Code
Acceptance No 15-0114.07
Expiration Date 03/03/2020
By
Miami Dade Product Control

ROBERT NIEMINEN
LICENSE
No 59166
03/30/2015
STATE OF FLORIDA
PROFESSIONAL ENGINEER

18 OF 24 PAGES

Firestone
BUILDING PRODUCTS
UNA-CLAD
NATIONWIDE 1-800-426-7737 LOCAL (763) 576-9595
Copyright © by Firestone Building Products / UNA-CLAD

PANEL DESCRIPTION Series 1000

PANEL NUMBER	QTY.	WIDTH	LENGTH

PFD = PANEL FACE DIMENSION

CUSTOMER: FIRESTONE BUILDING PRODUCTS		DRAWN BY: LAC
FAB NUMBER: 13294	RELEASE: 1	SCALE: 1=4
MATERIAL: GALV. STEEL		DATE: 02/05/2015
THICKNESS: 14 Ga. (0.075)	DRAWING NO. NPD2007-006 Rel1 P005.dwg	
FINISH: N/A	PRE: ☐ POST ☐	PAGE NO. P5

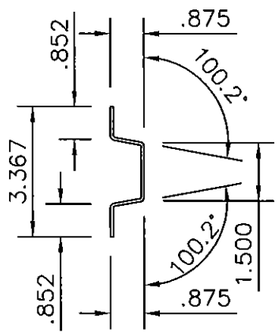

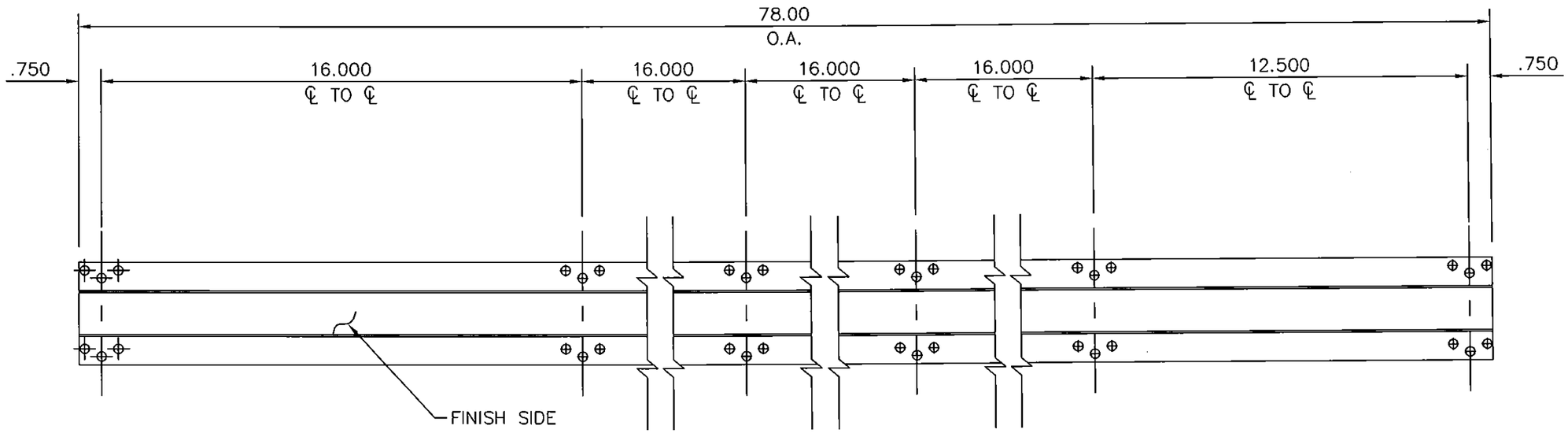

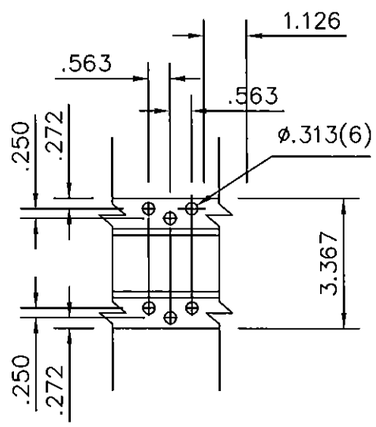

DESCRIPTION	HAT CHANNEL			
PART #	QTY.	LENGTH	FIELD APPLIED	SHOP APPLIED
P006	4	78.00		X

PRODUCT REVISED
as complying with the Florida Building Code
Acceptance No 15-0114.07
Expiration Date 03/03/2020
By
Miami Dade Product Control

ROBERT NIEMINEN
LICENSE
No 59166
03/30/2015
STATE OF
FLORIDA
PROFESSIONAL ENGINEER

19 OF 24 PAGES

Firestone
BUILDING PRODUCTS
UNA-CLAD
NATIONWIDE 1-800-426-7737 LOCAL (763) 576-9595
Copyright © by Firestone Building Products / UNA-CLAD

PANEL DESCRIPTION Series 1000

PANEL NUMBER	QTY.	WIDTH	LENGTH

PFD = PANEL FACE DIMENSION

CUSTOMER: FIRESTONE BUILDING PRODUCTS		DRAWN BY: LAC
FAB NUMBER: 13294	RELEASE: 1	SCALE: 1=4
MATERIAL: GALV. STEEL		DATE: 02/05/2015
THICKNESS: 14 Ga. (0.075)	DRAWING NO. NPD2007-006 Rel1 P006.dwg	
FINISH: N/A	PRE: ☐ POST ☐	PAGE NO. P6

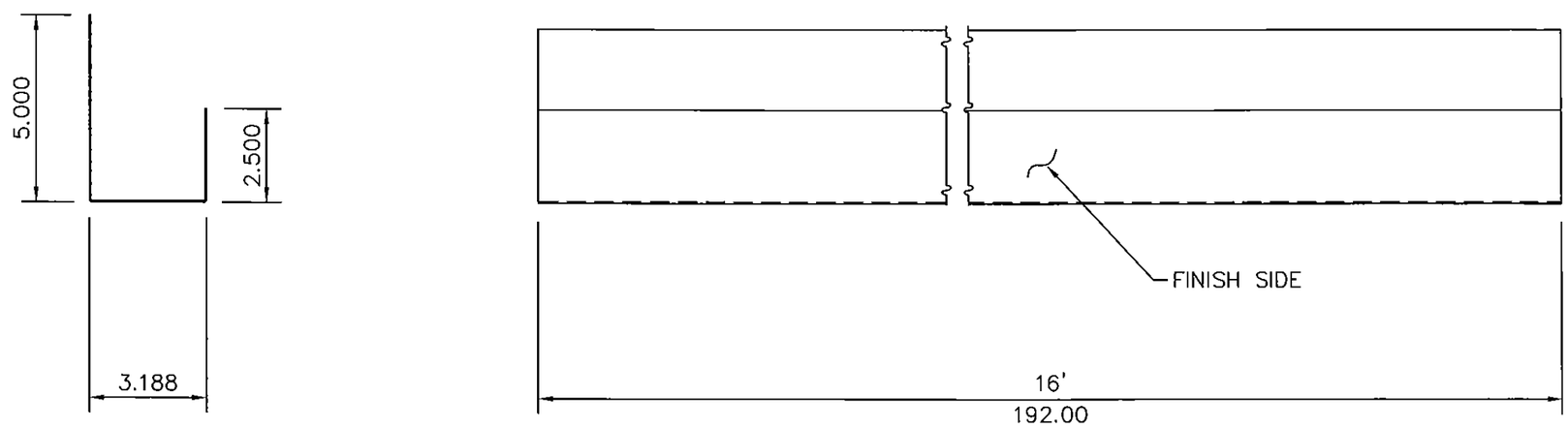

DESCRIPTION	.040 ALUM FLASHING			
PART #	QTY.	LENGTH	FIELD APPLIED	SHOP APPLIED
P007	12	192.00		X

PRODUCT REVISED
as complying with the Florida Building Code
Acceptance No 15-0114.07
Expiration Date 03/03/2020
By
Miami Dade Product Control

ROBERT NIEMINEN
LICENSE
No 59166
03/30/2015
STATE OF FLORIDA
PROFESSIONAL ENGINEER

20 OF 24 PAGES

Firestone BUILDING PRODUCTS
UNA-CLAD
NATIONWIDE 1-800-426-7737 LOCAL (763) 576-9595
Copyright © by Firestone Building Products / UNA-CLAD

PANEL DESCRIPTION Series 1000

PANEL NUMBER	QTY.	WIDTH	LENGTH

PFD = PANEL FACE DIMENSION

CUSTOMER: FIRESTONE BUILDING PRODUCTS		DRAWN BY: LAC
FAB NUMBER: 13294	RELEASE: 1	SCALE: 1=4
MATERIAL: 3003-H14		DATE: 02/05/2015
THICKNESS: .040	DRAWING NO. NPD2007-006 Rel1 P007.dwg	
FINISH: N/A	PRE: ☐ POST ☐	PAGE NO. P7

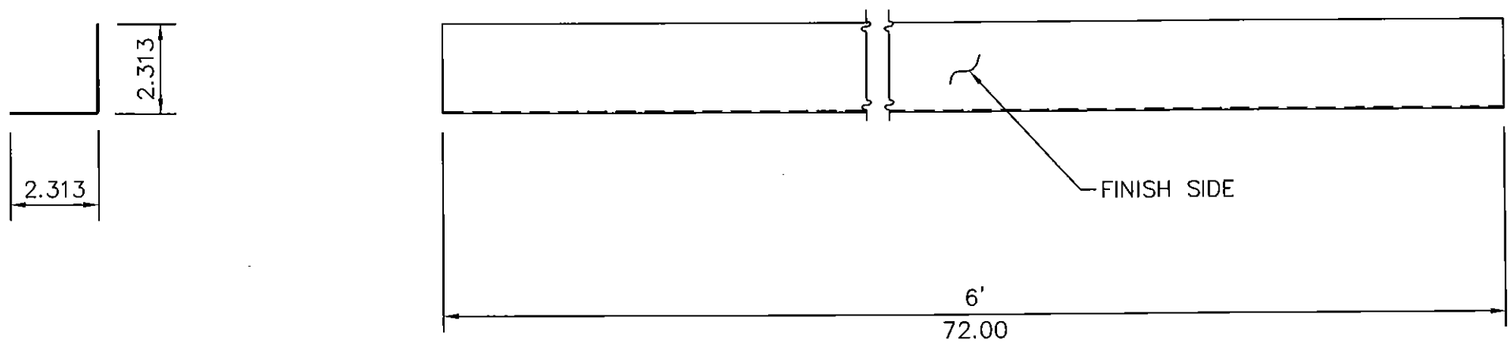

DESCRIPTION	.040 ALUM FLASHING			
PART #	QTY.	LENGTH	FIELD APPLIED	SHOP APPLIED
P008	4	72.00		X

PRODUCT REVISED
as complying with the Florida Building Code
Acceptance No 15-0114.07
Expiration Date 03/03/2020
By
Miami/Dade Product Control

ROBERT NIEMINEN
LICENSE
No 59166
03/30/2015
STATE OF FLORIDA
PROFESSIONAL ENGINEER

21OF24 PAGES

Firestone BUILDING PRODUCTS
UNA-CLAD
NATIONWIDE 1-800-426-7737 LOCAL (763) 576-9595
Copyright © by Firestone Building Products / UNA-CLAD

PANEL DESCRIPTION Series 1000

PANEL NUMBER	QTY.	WIDTH	LENGTH

PFD = PANEL FACE DIMENSION

CUSTOMER: FIRESTONE BUILDING PRODUCTS		DRAWN BY: LAC
FAB NUMBER: 13294	RELEASE: 1	SCALE: 1=4
MATERIAL: 3003-H14		DATE: 02/05/2015
THICKNESS: .040	DRAWING NO. NPD2007-006 Rel1 P008.dwg	
FINISH: N/A	PRE: ☐ POST ☐	PAGE NO. P8

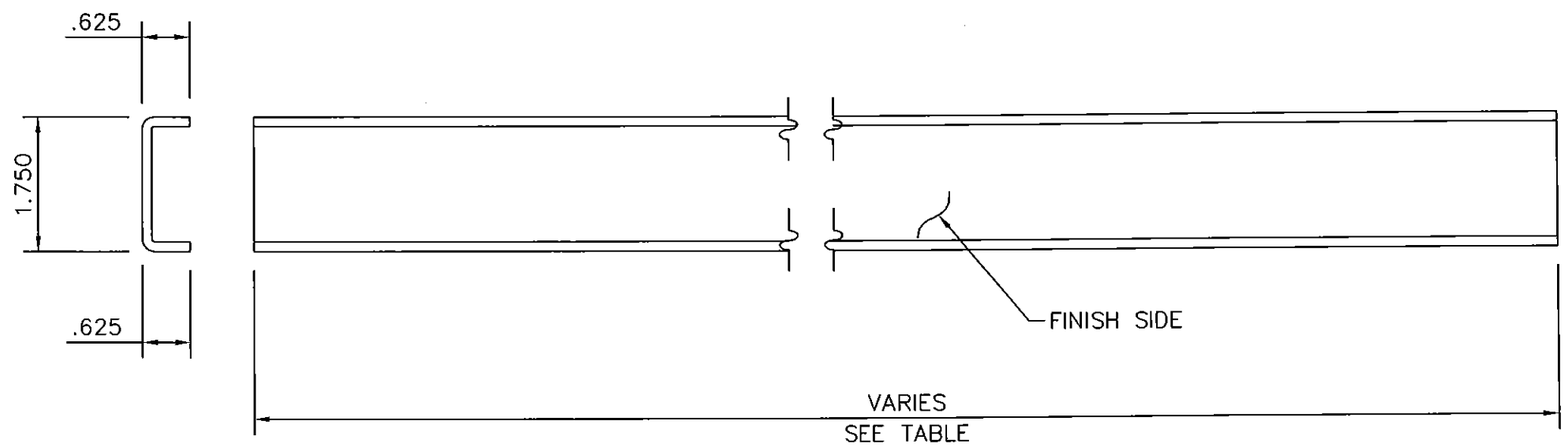

DESCRIPTION	.125 ALUM FORMED CHANNEL			
PART #	QTY.	LENGTH	FIELD APPLIED	SHOP APPLIED
P009A	4	56.125		X
P009B	4	12.625		X

PRODUCT REVISED
as complying with the Florida Building Code
Acceptance No 15-0114.07
Expiration Date 03/03/2020
By
Miami-Dade Product Control

ROBERT NIEMINEN
LICENSE
No 59106
03/30/2015
STATE OF FLORIDA
PROFESSIONAL ENGINEER

Firestone BUILDING PRODUCTS
UNA-CLAD
NATIONWIDE 1-800-426-7737 LOCAL (763) 576-9595
Copyright © by Firestone Building Products / UNA-CLAD

PANEL DESCRIPTION Series 1000

PANEL NUMBER	QTY.	WIDTH	LENGTH

PFD = PANEL FACE DIMENSION

CUSTOMER: FIRESTONE BUILDING PRODUCTS		DRAWN BY: LAC
FAB NUMBER: 13294	RELEASE: 1	SCALE: 1=2
MATERIAL: 3003-H14		DATE: 02/05/2015
THICKNESS: .125	DRAWING NO. NPD2007-006 Rel1 P009.dwg	
FINISH: N/A	PRE: ☐ POST ☐	PAGE NO. P9

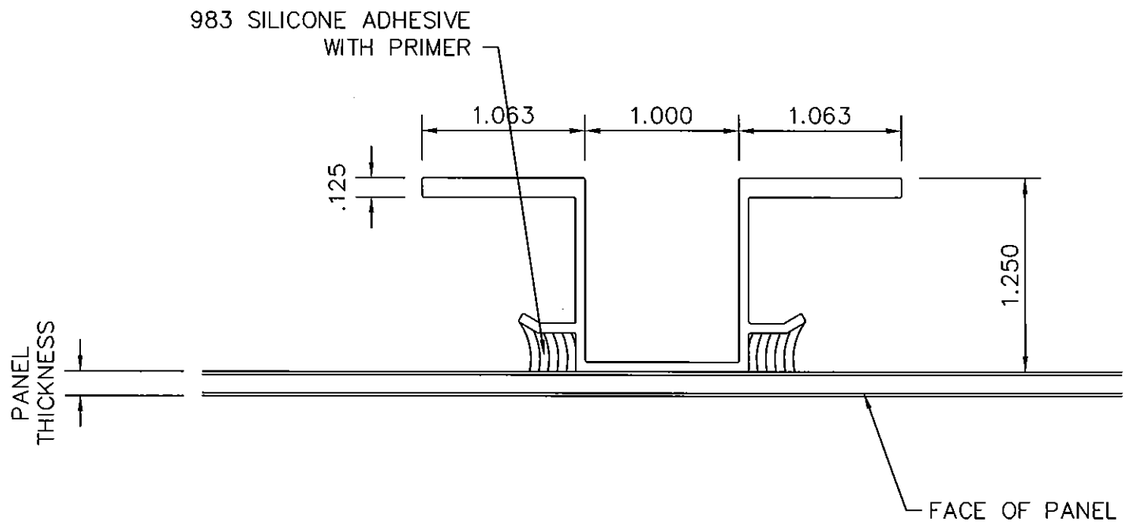

DESCRIPTION	PANEL STIFFENER CHANNEL			
PART #	QTY.	LENGTH	FIELD APPLIED	SHOP APPLIED
ST1	88	54.50		X

PRODUCT REVISED
as complying with the Florida
Building Code
Acceptance No 15-0114.07
Expiration Date 03/03/2020
By
Miami Dade Product Control

ROBERT NIEMINEN
LICENSE
No. 59186
03/30/2015
STATE OF
FLORIDA
PROFESSIONAL ENGINEER

23 OF 24
PAGES

Firestone
BUILDING PRODUCTS
UNA-CLAD
NATIONWIDE 1-800-426-7737 LOCAL (763) 576-9595
Copyright © by Firestone Building Products / UNA-CLAD

PANEL DESCRIPTION SERIES 1000

PANEL NUMBER	QTY.	WIDTH	LENGTH

PFD = PANEL FACE DIMENSION

CUSTOMER: FIRESTONE BUILDING PRODUCTS		DRAWN BY: LAC
FAB NUMBER: 13294	RELEASE: 1	SCALE: 1=1
MATERIAL: Aluminum		DATE: 02/05/2015
THICKNESS: 0.125	DRAWING NO. NPD2007-006 Rel1 Stiffener Count.dwg	
FINISH: Mill Finish	PRE: ☐ POST: ☐	PAGE NO. P1

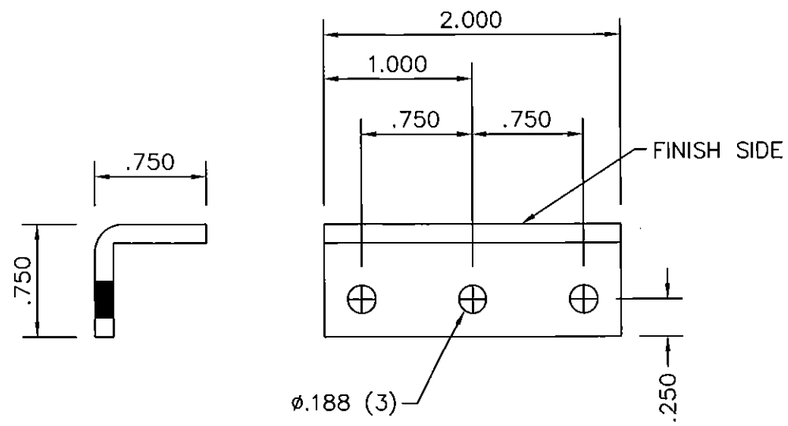

DESCRIPTION	.125" ALUMINUM 4MM PANEL CLIP			
PART #	QTY.	LENGTH	FIELD APPLIED	SHOP APPLIED
C1	400	2.00	X	

PRODUCT REVISED
as complying with the Florida
Building Code
Acceptance No 15-0114.07
Expiration Date 03/03/2020
By
Miami Dade Product Control

ROBERT NIEMINEN
LICENSE
No 59166
03/30/2015
STATE OF
FLORIDA
PROFESSIONAL ENGINEER

24 OF 24 PAGES

Firestone
BUILDING PRODUCTS
UNA-CLAD
NATIONWIDE 1-800-426-7737 LOCAL (763) 576-9595
Copyright © by Firestone Building Products / UNA-CLAD

PANEL DESCRIPTION SERIES 1000			
PANEL NUMBER	QTY.	WIDTH	LENGTH
PFD = PANEL FACE DIMENSION			

CUSTOMER: FIRESTONE BUILDING PRODUCTS		DRAWN BY: LAC
FAB NUMBER: 13294	RELEASE: 1	SCALE: 1=1
MATERIAL: Aluminum		DATE: 02/05/2015
THICKNESS: 0.125	DRAWING NO. NPD2007-006 Rel1 Clip Count.dwg	
FINISH: Mill Finish	PRE: ☐ POST: ☐	PAGE NO. P2