MIAMI-DADE COUNTY
DEPARTMENT OF REGULATORY AND ECONOMIC RESOURCES (RER)
BOARD AND CODE ADMINISTRATION DIVISION

MIAMI-DADE COUNTY
PRODUCT CONTROL SECTION
11805 SW 26 Street, Room 208
T (786) 315-2590 F (786) 315-2599
www.miamidade.gov/economy

NOTICE OF ACCEPTANCE (NOA)

Trulite Glass & Aluminum Solutions, LLC
800 Fairway Drive, Suite 200
Deerfield Beach, FL 33441

SCOPE:

This NOA is being issued under the applicable rules and regulations governing the use of construction materials. The documentation submitted has been reviewed and accepted by Miami-Dade County RER - Product Control Section to be used in Miami Dade County and other areas where allowed by the Authority Having Jurisdiction (AHJ).

This NOA shall not be valid after the expiration date stated below. The Miami-Dade County Product Control Section (In Miami Dade County) and/or the AHJ (in areas other than Miami Dade County) reserve the right to have this product or material tested for quality assurance purposes. If this product or material fails to perform in the accepted manner, the manufacturer will incur the expense of such testing and the AHJ may immediately revoke, modify, or suspend the use of such product or material within their jurisdiction. RER reserves the right to revoke this acceptance, if it is determined by Miami-Dade County Product Control Section that this product or material fails to meet the requirements of the applicable building code.

This product is approved as described herein, and has been designed to comply with the Florida Building Code, including the High Velocity Hurricane Zone.

DESCRIPTION: Series "3100 Resistor" Aluminum Storefront/Window Wall System – L.M.I.

APPROVAL DOCUMENT: Drawing No. **AD11-21**, titled "Resistor 3100 Storefront Wall - LMI", sheets 1 through 13 of 13, dated 09/22/11, with revision #1 dated 11/20/15, prepared by MCY Engineering, Inc., signed and sealed by Yiping Wang, P.E., bearing the Miami-Dade County Product Control Revision stamp with the Notice of Acceptance number and expiration date by the Miami-Dade County Product Control Section.

MISSILE IMPACT RATING: Large and Small Missile Impact Resistant

LABELING: Each unit shall bear a permanent label with the manufacturer's name or logo, city, state, model/series, and following statement: "Miami-Dade County Product Control Approved", unless otherwise noted herein.

RENEWAL of this NOA shall be considered after a renewal application has been filed and there has been no change in the applicable building code negatively affecting the performance of this product.

TERMINATION of this NOA will occur after the expiration date or if there has been a revision or change in the materials, use, and/or manufacture of the product or process. Misuse of this NOA as an endorsement of any product, for sales, advertising or any other purposes shall automatically terminate this NOA. Failure to comply with any section of this NOA shall be cause for termination and removal of NOA.

ADVERTISEMENT: The NOA number preceded by the words Miami-Dade County, Florida, and followed by the expiration date may be displayed in advertising literature. If any portion of the NOA is displayed, then it shall be done in its entirety.

INSPECTION: A copy of this entire NOA shall be provided to the user by the manufacturer or its distributors and shall be available for inspection at the job site at the request of the Building Official.

This NOA **revises and renews NOA# 11-1117.02** and consists of this page 1 and evidence pages E-1 and E-2, as well as approval document mentioned above.

The submitted documentation was reviewed by **Manuel Perez, P.E.**

MIAMI-DADE COUNTY APPROVED

2/18/15

Trulite Glass & Aluminum Solutions, LLC

NOTICE OF ACCEPTANCE: EVIDENCE SUBMITTED

A. DRAWINGS

1. Manufacturer's die drawings and sections.
2. Drawing No **AD11-21**, Sheets 1 through 13 of 13, titled "Resistor 3100 Storefront Wall - LMI", dated 09/22/11, with revision #1 dated 11/20/15, prepared by MCY Engineering, Inc., signed and sealed by Yiping Wang, P.E.

B. TESTS

1. Test reports on: 1) Uniform Static Air Pressure Test, Loading per FBC, TAS 202–94
   2) Large Missile Impact Test per FBC, TAS 201–94
   3) Cyclic Wind Pressure Loading per FBC, TAS 203–94
   along with marked-up drawings and installation diagram of an aluminum window wall system, prepared by Fenestration Testing Laboratory, Inc., Test Report No. **FTL-5884,** dated 05/28/09, signed and sealed by Michael R. Wenzel, P.E.
   (Submitted under NOA No.09-1022.01)
2. Test reports on: 1) Uniform Static Air Pressure Test, Loading per FBC, TAS 202–94
   2) Large Missile Impact Test per FBC, TAS 201–94
   3) Cyclic Wind Pressure Loading per FBC, TAS 203–94
   along with marked-up drawings and installation diagram of an aluminum window wall system, prepared by Fenestration Testing Laboratory, Inc., Test Report No. **FTL-5140,** dated 01/20/07, signed and sealed by Michael R. Wenzel, P.E.
   (Submitted under NOA No.08-1024.04)
3. Test reports on: 1) Air Infiltration Test, per FBC, TAS 202–94
   2) Uniform Static Air Pressure Test, Loading per FBC, TAS 202–94
   3) Water Resistance Test, per FBC, TAS 202–94
   4) Large Missile Impact Test per FBC, TAS 201–94
   5) Cyclic Wind Pressure Loading per FBC, TAS 203–94
   along with marked-up drawings and installation diagram of an aluminum window wall system, prepared by Fenestration Testing Laboratory, Inc., Test Report No. **FTL-3942,** dated 02/03/04, signed and sealed by Edmundo Largaespada, P.E.
   (Submitted under NOA No. 05-0906.04)
4. Test reports on: 1) Uniform Static Air Pressure Test, Loading per FBC, TAS 202–94
   2) Large Missile Impact Test per FBC, TAS 201–94
   3) Cyclic Wind Pressure Loading per FBC, TAS 203–94
   along with marked-up drawings and installation diagram of an aluminum window wall system, prepared by Fenestration Testing Laboratory, Inc., Test Report No. **FTL-3634,** dated 04/24/03, signed and sealed by Joseph Chan, P.E.
   (Submitted under NOA No. 04-1213.01)

Manuel Perez

Manuel Perez, P.E.
Product Control Examiner
NOA No. 15-0122.02
Expiration Date: March 31, 2020
Approval Date: February 26, 2015

NOTICE OF ACCEPTANCE: EVIDENCE SUBMITTED

C. CALCULATIONS

Anchor verification calculations and structural analysis, complying with **FBC-5th Edition (2014)**, dated January 20, 2015, prepared by MCY Engineering, Inc., signed and sealed by Yiping Wang, P.E.

1. Glazing complies with **ASTM E1300-04**

D. QUALITY ASSURANCE

1. Miami–Dade Department of Regulatory and Economic Resources (RER).

E. MATERIAL CERTIFICATIONS

1. Notice of Acceptance No. **11-0624.02** issued to **E.I. DuPont DeNemours & Co.**, Inc. for their "**DuPont SentryGlas® Interlayer**" dated 08/25/11, expiring on 01/14/17.
2. Notice of Acceptance No. **14-0423.17** issued to **Eastman Chemical Company (MA)** for their "**Saflex Clear and Color Glass Interlayers**" dated 0619/14, expiring on 05/21/16.
3. Notice of Acceptance No. **14–0423.16** issued to **Eastman Chemical Company (MA)** for their "**Saflex HP Clear or Color Glass Interlayers**" dated 06/19/14, expiring on 04/14/18.

F. STATEMENTS

1. Statement letter of conformance, complying with **FBC-5th Edition (2014)**, dated January 20, 2015, issued by MCY Engineering, Inc., signed and sealed by Yiping Wang, P.E.
2. Statement letter of no financial interest, dated January 20, 2015, issued by MCY Engineering, Inc., signed and sealed by Yiping Wang, P.E.

G. OTHERS

1. Notice of Acceptance No. **11-1117.02**, issued to Arch Aluminum & Glass Company, Inc. for their Series "3100 Resistor" Aluminum Storefront/Window Wall System – L.M.I., approved on 02/09/12 and expiring on 03/31/15.

Manuel Perez, P.E.
Product Control Examiner
NOA No. 15-0122.02
Expiration Date: March 31, 2020
Approval Date: February 26, 2015

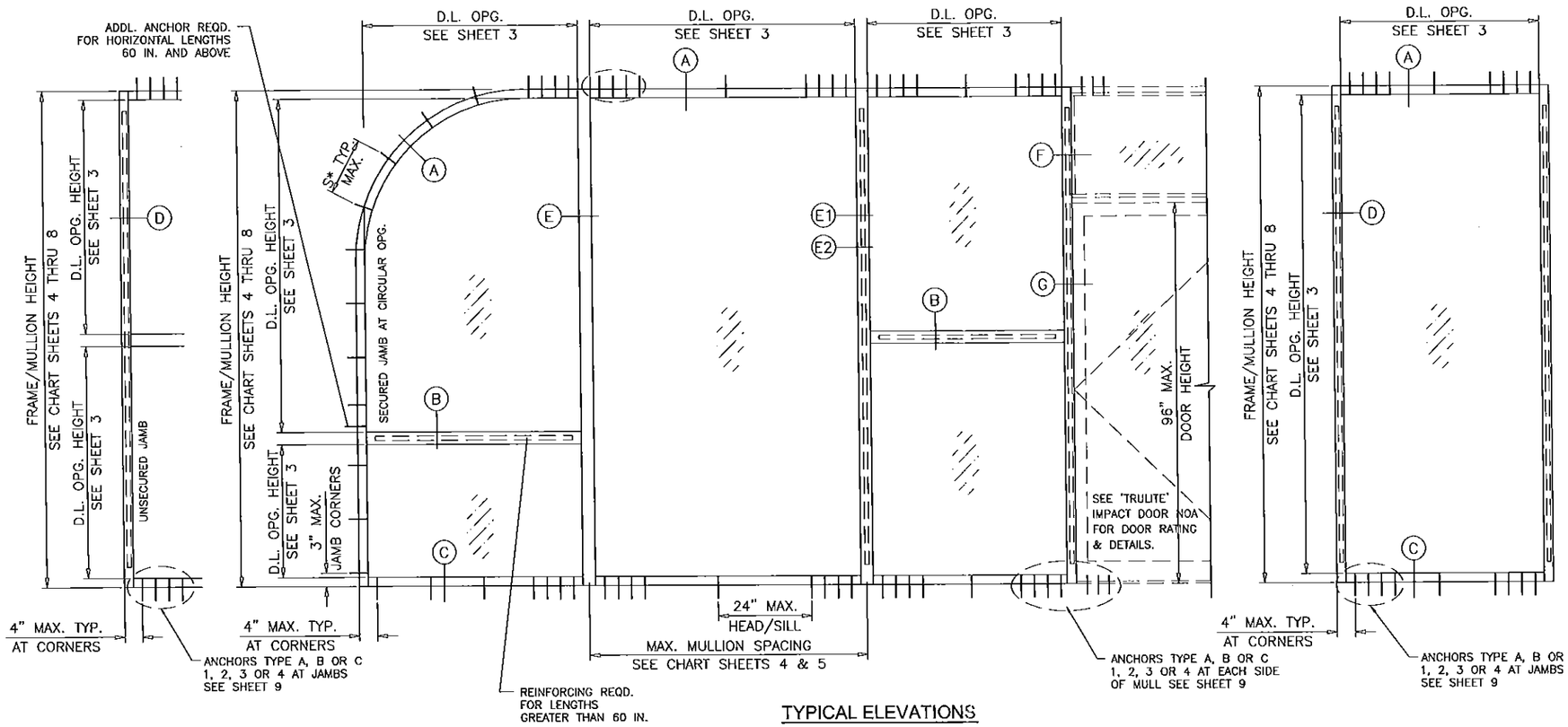

TYPICAL ELEVATIONS

S* = 11" O.C. FOR ALL TYPICAL ANCHORS EXCEPT 10" O.C. FOR 1/4" ULTRACON INTO GROUT FILLED BLOCK WHEN MULLION SPACE > 64"

SERIES 3100/L-3100 ALUMINUM WINDOW WALL SYSTEM

- WINDOW WALL SYSTEM IS RATED FOR LARGE & SMALL MISSILE IMPACT. SHUTTERS ARE NOT REQUIRED.
- THIS SYSTEM MAY BE USED IN CONJUNCTION WITH MIAMI DADE COUNTY APPROVED ENTRANCE DOORS.
- CODE REQUIREMENTS FOR SAFEGUARDS MUST BE OBSERVED.

- THIS PRODUCT HAS BEEN DESIGNED AND TESTED TO COMPLY WITH THE REQUIREMENTS OF THE FLORIDA BUILDING CODE 2010/2014 EDITION INCLUDING HIGH VELOCITY HURRICANE ZONE (HVHZ).
- WOOD BUCKS BY OTHERS, MUST BE ANCHORED PROPERLY TO TRANSFER LOADS TO THE STRUCTURE.
- ANCHORS SHALL BE AS LISTED, SPACED AS SHOWN ON DETAILS, ANCHORS EMBEDMENT TO BASE MATERIAL SHALL BE BEYOND WALL DRESSING OR STUCCO.
- ANCHORING OR LOADING CONDITIONS NOT SHOWN IN THESE DETAILS ARE NOT PART OF THIS APPROVAL.
- A LOAD DURATION INCREASE IS USED IN DESIGN OF ANCHORS INTO WOOD ONLY.
- MATERIALS INCLUDING BUT NOT LIMITED TO STEEL/METAL SCREWS THAT COME INTO CONTACT WITH OTHER DISSIMILAR MATERIALS SHALL MEET THE REQUIREMENTS OF 2010/2014 FLORIDA BLDG. CODE SECTION AS APPLICABLE.
- ULTIMATE DESIGN LOAD OBTAINED FROM ASCE-7-10, MULTIPLY BY 0.6 SHALL BE LESS THAN OR EQUAL TO MAX. DESIGN LOAD IN THIS DOCUMENT.

INSTRUCTIONS:

USE CHARTS AS FOLLOWS.

STEP 1: DETERMINE DESIGN WIND LOAD REQUIREMENTS BASED ON WIND VELOCITY, BLDG. HEIGHT, WIND ZONE USING APPLICABLE ASCE 7 STANDARD.

STEP 2: SEE CHARTS ON SHEET 2 FOR DESIGN LOAD CAPACITY OF DESIRED GLASS SIZE BASED ON APPLICABLE WIND DURATION.

STEP 3: CHECK MULLION AND JAMB CAPACITY FOR A GIVEN SPACING AND HEIGHT USING CHARTS ON SHEET 3 & 4. THE CAPACITY SHOULD EXCEED THE DESIGN LOAD.

STEP 4: USING CHART ON SHEETS 5 SELECT ANCHOR OPTION WITH DESIGN RATING MORE THAN DESIGN LOAD SPECIFIED IN STEP 1 ABOVE.

STEP 5: THE LOWEST VALUE RESULTING FROM STEPS 2, 3 AND 4 SHALL APPLY TO ENTIRE SYSTEM.

Trulite
GLASS & ALUMINUM SOLUTIONS™
http://www.trulite.com
800 FAIRWAY DRIVE, Suite 200
DEERFIELD BEACH, FL 33441
p. 800-432-8132 | f. 954-724-2083

PRODUCT:

Resistor
3100
STOREFRONT WALL-LMI

Resistor PRODUCT SERIES

REVN	DATE/REMARKS
REV. 1	11/20/15 UPDATE TO 2014FBC

ENGINEER:
MCY ENGINEERING, INC.
GLAZING CONSULTANT
8501 SW 124TH AVE. STE. 205A
MIAMI, FL 33183
P: 305-271-0117
Email: MCY.Engineering@att.net
www.MCYEngineering.com

STAMP:
YIPING WANG, P.E.
FLORIDA REGISTRATION
PE #55983
LICENSE NO. 28677
No. 55983
STATE OF FLORIDA
PROFESSIONAL ENGINEER

PRODUCT CONTROL APPROVAL:
JAN 20 2015

PRODUCT REVISED
as complying with the Florida Building Code
Acceptance No 15-0122.02
Expiration Date March 31, 2020
By Manuel Perez
Miami-Dade Product Control

DRAWN: S.L.	DRAWING No:
DATE: 9-22-11	1 OF 13
DWG: AD11-21	

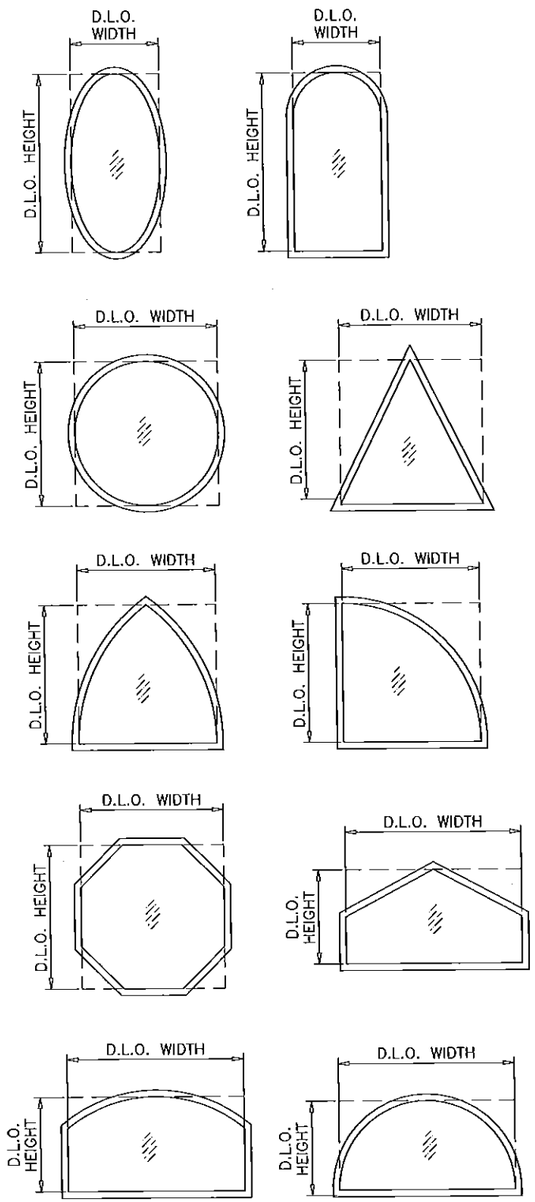

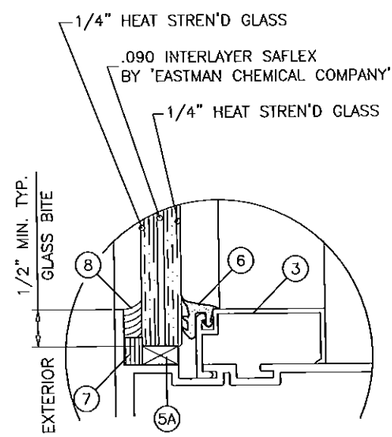

GLASS TYPE 'A'
9/16" NOMINAL OVERALL

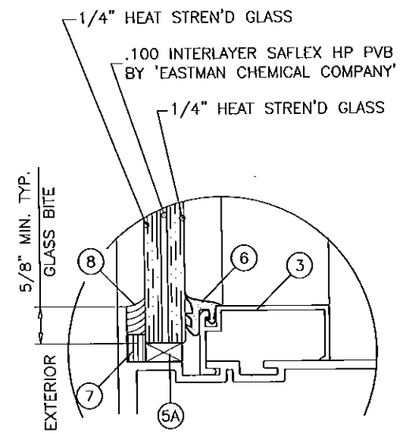

GLASS TYPE 'B'
9/16" NOMINAL OVERALL

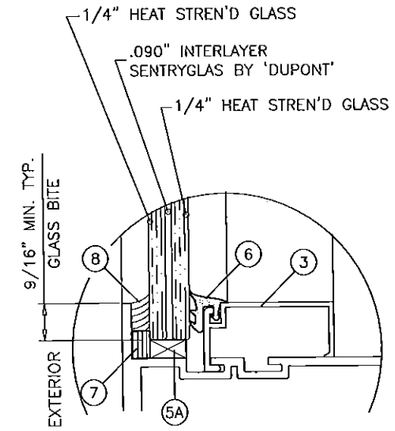

GLASS TYPE 'C'
9/16" NOMINAL OVERALL

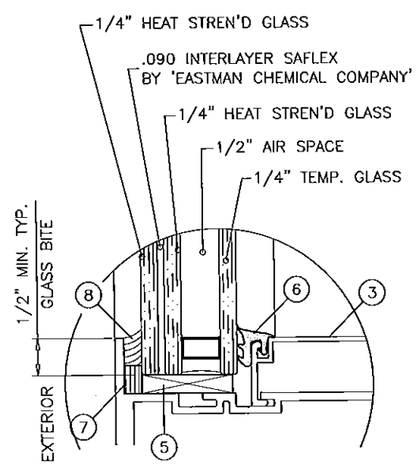

GLASS TYPE 'A1'
1-5/16" NOMINAL OVERALL

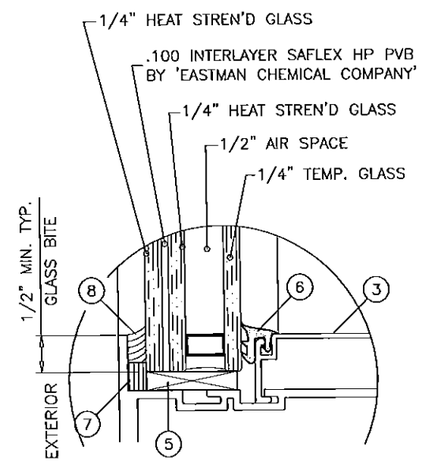

GLASS TYPE 'B1'
1-5/16" NOMINAL OVERALL

ALLOWABLE LOADS FOR ALTERNATE SHAPES AS SHOWN ABOVE OR SIMILAR CAN BE VERIFIED BY INSCRIBING PICTURE WINDOW SHAPE WITHIN SQUARE OR RECTANGLE AS SHOWN IN DOTTED LINES AND OBTAINING ALLOWABLE LOADS FROM THOSE SHAPES. SINGLE LITES MAY BE INSTALLED VERTICALLY AS SHOWN ABOVE OR HORIZONTALLY.

FOR ALTERNATE SHAPES LIMIT MAX. LOADS TO ±90.0 PSF

SEE SHEET 3 FOR D.L.O. WIDTHS AND HEIGHTS.

USE ANCHOR TYPE 'D' AT 3" FROM FRAME ENDS AND 12" O.C. MAX. SPACING.

GLAZING OPTION

Trulite
GLASS & ALUMINUM SOLUTIONS™
http://www.trulite.com
800 FAIRWAY DRIVE, Suite 200
DEERFIELD BEACH, FL 33441
p. 800-432-8132 | f. 954-724-2083

PRODUCT:

Resistor
3100
STOREFRONT WALL-LMI

Resistor
PRODUCT SERIES

REVN	DATE/REMARKS
REV. 1	11/20/15 UPDATE TO 2014FBC

ENGINEER:
MCY ENGINEERING, INC.
GLAZING CONSULTANT
8501 SW 124TH AVE. STE. 205A
MIAMI, FL 33183
P: 305-271-0117
Email: MCY.Engineering@att.net
www.MCYEngineering.com

STAMP:
YIPING WANG, P.E.
FLORIDA REGISTRATION
PE #55983
LICENSE NO. 28677
No. 55983
STATE OF FLORIDA
PROFESSIONAL ENGINEER

PRODUCT CONTROL APPROVAL:
JAN 20 2015

PRODUCT REVISED
as complying with the Florida Building Code
Acceptance No 15-0122.02
Expiration Date March 31, 2020
By Manuel Perez
Miami-Dade Product Control

DRAWN: S.L.	DRAWING No:
DATE: 9-22-11	2 OF 13
DWG: AD11-21	

GLASS LOAD CAPACITY – PSF						
NOMINAL DIMS.		GLASS 'A'	GLASS 'A1'	GLASS 'B'	GLASS 'B1'	GLASS 'C'
D.L.O. WIDTH	D.L.O. HEIGHT	EXT. (+) INT. (–)	EXT. (+) INT. (–)	EXT. (+) INT. (–)	EXT. (+) INT. (–)	EXT. (+) INT. (–)
20"	68"	70.0	80.0	100.0	100.0	100.0
26"		70.0	80.0	100.0	100.0	100.0
32"		70.0	80.0	100.0	100.0	100.0
38"		70.0	80.0	100.0	100.0	100.0
44"		70.0	80.0	100.0	100.0	100.0
50"		70.0	80.0	100.0	100.0	100.0
56"		70.0	80.0	100.0	100.0	100.0
62"		70.0	80.0	100.0	100.0	100.0
68"		70.0	–	100.0	100.0	100.0
72"		70.0	–	100.0	100.0	100.0
20"	74"	70.0	80.0	100.0	100.0	100.0
26"		70.0	80.0	100.0	100.0	100.0
32"		70.0	80.0	100.0	100.0	100.0
38"		70.0	80.0	100.0	100.0	100.0
44"		70.0	80.0	100.0	100.0	100.0
50"		70.0	80.0	100.0	100.0	100.0
56"		70.0	80.0	100.0	100.0	100.0
62"		70.0	–	100.0	100.0	100.0
68"		–	–	100.0	100.0	100.0
72"		–	–	100.0	100.0	100.0
20"	80"	70.0	80.0	100.0	100.0	100.0
26"		70.0	80.0	100.0	100.0	100.0
32"		70.0	80.0	100.0	100.0	100.0
38"		70.0	80.0	100.0	100.0	100.0
44"		70.0	80.0	100.0	100.0	100.0
50"		70.0	80.0	100.0	100.0	100.0
56"		70.0	–	100.0	100.0	100.0
62"		–	–	100.0	100.0	100.0
68"		–	–	100.0	100.0	100.0
72"		–	–	100.0	100.0	100.0
20"	86"	70.0	80.0	100.0	100.0	100.0
26"		70.0	80.0	100.0	100.0	100.0
32"		70.0	80.0	100.0	100.0	100.0
38"		70.0	80.0	100.0	100.0	100.0
44"		70.0	80.0	100.0	100.0	100.0
50"		70.0	–	100.0	100.0	100.0
56"		70.0	–	100.0	100.0	100.0
62"		–	–	100.0	100.0	100.0
68"		–	–	100.0	100.0	100.0
72"		–	–	100.0	100.0	100.0
20"	92"	70.0	80.0	100.0	100.0	100.0
26"		70.0	80.0	100.0	100.0	100.0
32"		70.0	80.0	100.0	100.0	100.0
38"		70.0	80.0	100.0	100.0	100.0
44"		70.0	80.0	100.0	100.0	100.0
50"		70.0	–	100.0	100.0	100.0
56"		–	–	100.0	100.0	100.0
62"		–	–	100.0	100.0	100.0
68"		–	–	100.0	100.0	100.0
72"		–	–	100.0	100.0	–

GLASS LOAD CAPACITY – PSF						
NOMINAL DIMS.		GLASS 'A'	GLASS 'A1'	GLASS 'B'	GLASS 'B1'	GLASS 'C'
D.L.O. WIDTH	D.L.O. HEIGHT	EXT. (+) INT. (–)	EXT. (+) INT. (–)	EXT. (+) INT. (–)	EXT. (+) INT. (–)	EXT. (+) INT. (–)
20"	98"	70.0	80.0	100.0	100.0	100.0
26"		70.0	80.0	100.0	100.0	100.0
32"		70.0	80.0	100.0	100.0	100.0
38"		70.0	80.0	100.0	100.0	100.0
44"		70.0	–	100.0	100.0	100.0
50"		–	–	100.0	100.0	100.0
56"		–	–	100.0	100.0	100.0
62"		–	–	100.0	100.0	100.0
68"		–	–	100.0	100.0	–
20"	104"	70.0	80.0	100.0	100.0	100.0
26"		70.0	80.0	100.0	100.0	100.0
32"		70.0	80.0	100.0	100.0	100.0
38"		70.0	80.0	100.0	100.0	100.0
44"		70.0	–	100.0	100.0	100.0
50"		–	–	100.0	100.0	100.0
56"		–	–	100.0	100.0	100.0
62"		–	–	100.0	100.0	100.0
20"	110"	70.0	80.0	100.0	100.0	100.0
26"		70.0	80.0	100.0	100.0	100.0
32"		70.0	80.0	100.0	100.0	100.0
38"		70.0	80.0	100.0	100.0	100.0
44"		70.0	–	100.0	100.0	100.0
50"		–	–	100.0	100.0	100.0
56"		–	–	100.0	100.0	100.0
62"		–	–	97.5	100.0	–
20"	116"	70.0	80.0	100.0	100.0	100.0
26"		70.0	80.0	100.0	100.0	100.0
32"		70.0	80.0	100.0	100.0	100.0
38"		70.0	–	100.0	100.0	100.0
44"		–	–	100.0	100.0	100.0
50"		–	–	100.0	100.0	100.0
56"		–	–	97.9	100.0	97.9
58–3/4"		–	–	94.6	100.0	–
20"	122"	70.0	80.0	100.0	100.0	100.0
26"		70.0	80.0	100.0	100.0	100.0
32"		70.0	80.0	100.0	100.0	100.0
38"		70.0	–	100.0	100.0	100.0
44"		–	–	100.0	100.0	100.0
50"		–	–	100.0	100.0	100.0
20"	128"	70.0	80.0	100.0	100.0	100.0
26"		70.0	80.0	100.0	100.0	100.0
32"		70.0	80.0	100.0	100.0	100.0
38"		70.0	–	100.0	100.0	100.0
44"		–	–	100.0	100.0	100.0
50"		–	–	100.0	100.0	100.0

GLASS LOAD CAPACITY – PSF						
NOMINAL DIMS.		GLASS 'A'	GLASS 'A1'	GLASS 'B'	GLASS 'B1'	GLASS 'C'
D.L.O. WIDTH	D.L.O. HEIGHT	EXT. (+) INT. (–)	EXT. (+) INT. (–)	EXT. (+) INT. (–)	EXT. (+) INT. (–)	EXT. (+) INT. (–)
20"	134"	70.0	80.0	100.0	100.0	100.0
26"		70.0	80.0	100.0	100.0	100.0
32"		70.0	–	100.0	100.0	100.0
38"		–	–	100.0	100.0	100.0
44"		–	–	100.0	100.0	100.0
50"		–	–	99.8	100.0	–
20"	140"	70.0	80.0	100.0	100.0	100.0
26"		70.0	80.0	100.0	100.0	100.0
32"		70.0	–	100.0	100.0	100.0
38"		–	–	100.0	100.0	100.0
44"		–	–	100.0	100.0	100.0

NOTE:
GLASS CAPACITIES ON THIS SHEET ARE BASED ON ASTM E1300/04 (3 SEC. GUSTS)

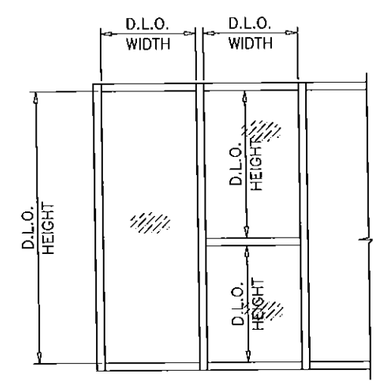

STEP 2: GLASS LOAD TABLES

Trulite
GLASS & ALUMINUM SOLUTIONS™
http://www.trulite.com
800 FAIRWAY DRIVE, Suite 200
DEERFIELD BEACH, FL 33441
p. 800-432-8132 | f. 954-724-2083

PRODUCT:

Resistor
3100
STOREFRONT WALL-LMI

Resistor
PRODUCT SERIES

REVN	DATE/REMARKS
REV. 1	1/20/15 UPDATE TO 2014FBC

ENGINEER:
MCY ENGINEERING, INC.
GLAZING CONSULTANT
8501 SW 124TH AVE. STE. 205A
MIAMI, FL 33183
P: 305-271-0117
Email: MCY.Engineering@att.net
www.MCYEngineering.com

STAMP:
YIPING WANG, P.E.
FLORIDA REGISTRATION
PE #55983
C.A.N. 28677
YIPING WANG LICENSE No. 55983 STATE OF FLORIDA PROFESSIONAL ENGINEER

PRODUCT CONTROL APPROVAL:
JAN 20 2015

PRODUCT REVISED
as complying with the Florida Building Code
Acceptance No 15-0122.02
Expiration Date March 31, 2020
By Manuel Perez
Miami Dade Product Control

DRAWN: S.L.	DRAWING No:
DATE: 9–22–11	3 OF 13
DWG: AD11–21	

JAMB/MULLION LOAD CAPACITY – PSF
WITHOUT INTERMEDIATE HORIZONTALS

NOMINAL DIMS.		MULL 'M1'	JAMB 'J1' MULL 'M2'	JAMB 'J2' MULL 'M3'
WIDTH (W)	FRAME HEIGHT	EXT. (+) INT. (–)	EXT. (+) INT. (–)	EXT. (+) INT. (–)
24"	78"	80.0	100.0	100.0
30"		80.0	100.0	100.0
36"		80.0	100.0	100.0
42"		80.0	100.0	100.0
48"		80.0	100.0	100.0
54"		80.0	100.0	100.0
60"		80.0	100.0	100.0
66"		–	100.0	100.0
72"		–	100.0	100.0
24"	84"	80.0	100.0	100.0
30"		80.0	100.0	100.0
36"		80.0	100.0	100.0
42"		80.0	100.0	100.0
48"		80.0	100.0	100.0
54"		80.0	100.0	100.0
60"		80.0	100.0	100.0
66"		–	100.0	100.0
72"		–	100.0	100.0
24"	90"	80.0	100.0	100.0
30"		80.0	100.0	100.0
36"		80.0	100.0	100.0
42"		80.0	100.0	100.0
48"		80.0	100.0	100.0
54"		77.4	100.0	100.0
60"		–	100.0	100.0
66"		–	100.0	100.0
72"		–	100.0	100.0
24"	96"	80.0	100.0	100.0
30"		80.0	100.0	100.0
36"		80.0	100.0	100.0
42"		80.0	100.0	100.0
48"		72.8	100.0	100.0
54"		66.3	100.0	100.0
60"		–	96.8	96.8
66"		–	90.9	90.9
72"		–	86.4	86.4
24"	102"	–	100.0	100.0
30"		–	100.0	100.0
36"		–	100.0	100.0
42"		–	100.0	100.0
48"		–	99.5	99.5
54"		–	90.4	90.4
60"		–	83.3	83.3
66"		–	77.9	77.9
72"		–	73.7	73.7

JAMB/MULLION LOAD CAPACITY – PSF
WITHOUT INTERMEDIATE HORIZONTALS

NOMINAL DIMS.		MULL 'M1'	JAMB 'J1' MULL 'M2'	JAMB 'J2' MULL 'M3'
WIDTH (W)	FRAME HEIGHT	EXT. (+) INT. (–)	EXT. (+) INT. (–)	EXT. (+) INT. (–)
24"	108"	–	100.0	100.0
30"		–	100.0	100.0
36"		–	100.0	100.0
42"		–	98.0	98.0
48"		–	87.1	87.1
54"		–	78.9	78.9
60"		–	72.5	72.5
66"		–	67.6	67.6
24"	114"	–	100.0	100.0
30"		–	100.0	100.0
36"		–	98.2	98.2
42"		–	85.4	85.4
48"		–	76.0	76.0
54"		–	69.0	69.0
60"		–	63.5	63.5
24"	120"	–	100.0	100.0
30"		–	99.5	99.5
36"		–	83.8	83.8
42"		–	72.8	72.8
48"		–	64.7	64.7
54"		–	58.6	60.0
60"		–	53.8	60.0
24"	126"	–	–	60.0
30"		–	–	60.0
36"		–	–	60.0
42"		–	–	60.0
48"		–	–	60.0
54"		–	–	60.0
24"	132"	–	–	60.0
30"		–	–	60.0
36"		–	–	60.0
42"		–	–	60.0
48"		–	–	60.0
24"	138"	–	–	60.0
30"		–	–	60.0
36"		–	–	60.0
42"		–	–	60.0
48"		–	–	60.0
24"	144"	–	–	60.0
30"		–	–	60.0
36"		–	–	60.0
42"		–	–	60.0
48"		–	–	57.6

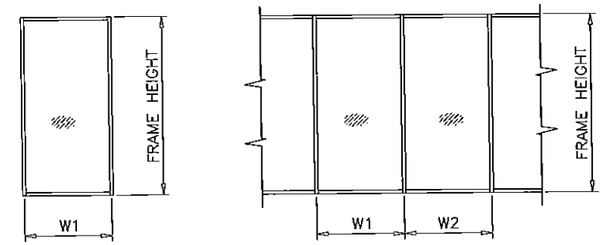

WIDTH (W) = W1 (JAMB)

WIDTH (W) = $\frac{W1 + W2}{2}$

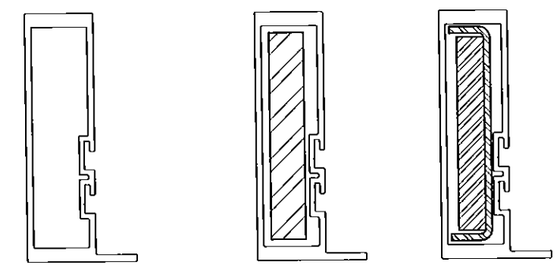

JAMB 'J1'

JAMB 'J2'
STEEL REINFORCED

JAMB 'J2'
STEEL REINFORCED
(OPTIONAL)

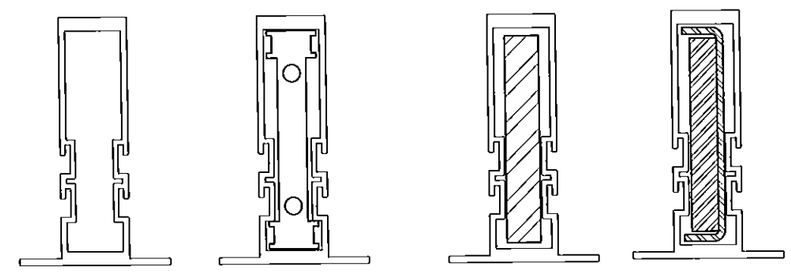

MULLION 'M1'

MULLION 'M2'
ALUMINUM REINFORCED

MULLION 'M3'
STEEL REINFORCED

MULLION 'M3'
STEEL REINFORCED
(OPTIONAL)

STEP 3: MULLION LOAD CAPACITIES

Trulite
GLASS & ALUMINUM SOLUTIONS™
http://www.trulite.com
800 FAIRWAY DRIVE, Suite 200
DEERFIELD BEACH, FL 33441
p. 800-432-8132 | f. 954-724-2083

PRODUCT:

Resistor
3100
STOREFRONT WALL-LMI

Resistor
PRODUCT SERIES

REVN	DATE/REMARKS
REV. 1	1/20/15 UPDATE TO 2014FBC

ENGINEER:
MCY ENGINEERING, INC.
GLAZING CONSULTANT
8501 SW 124TH AVE. STE. 205A
MIAMI, FL 33183
P: 305-271-0117
Email: MCY.Engineering@att.net
www.MCYEngineering.com

STAMP:
YIPING WANG, P.E.
FLORIDA REGISTRATION
NO. 55983
C.A.N: 28677
YIPING WANG LICENSE No. 55983 STATE OF FLORIDA PROFESSIONAL ENGINEER

PRODUCT CONTROL APPROVAL:
JAN 20 2015

PRODUCT REVISED
as complying with the Florida
Building Code
Acceptance No 15-0122.02
Expiration Date March 31, 2020
By Manuel Perez
Miami-Dade Product Control

DRAWN: S.L.	DRAWING No:
DATE: 9–22–11	4 OF 13
DWG: AD11–21	

JAMB/MULLION LOAD CAPACITY – PSF
WITH INTERMEDIATE HORIZONTALS

NOMINAL DIMS.		MULL 'M1'	JAMB 'J1' MULL 'M2'	JAMB 'J2' MULL 'M3'
WIDTH (W)	FRAME HEIGHT	EXT. (+) INT. (–)	EXT. (+) INT. (–)	EXT. (+) INT. (–)
24"	78"	80.0	100.0	100.0
30"		80.0	100.0	100.0
36"		80.0	100.0	100.0
42"		80.0	100.0	100.0
48"		80.0	100.0	100.0
54"		80.0	100.0	100.0
60"		80.0	100.0	100.0
66"		–	100.0	100.0
72"		–	100.0	100.0
24"	84"	80.0	100.0	100.0
30"		80.0	100.0	100.0
36"		80.0	100.0	100.0
42"		80.0	100.0	100.0
48"		80.0	100.0	100.0
54"		80.0	100.0	100.0
60"		72.1	100.0	100.0
66"		–	100.0	100.0
72"		–	93.9	93.9
24"	90"	80.0	100.0	100.0
30"		80.0	100.0	100.0
36"		80.0	100.0	100.0
42"		80.0	100.0	100.0
48"		78.6	100.0	100.0
54"		69.8	100.0	100.0
60"		–	97.0	97.0
66"		–	88.2	88.2
72"		–	80.9	80.9
24"	96"	80.0	100.0	100.0
30"		80.0	100.0	100.0
36"		80.0	100.0	100.0
42"		78.9	100.0	100.0
48"		69.0	100.0	100.0
54"		61.4	93.7	93.7
60"		–	84.3	84.3
66"		–	76.7	76.7
72"		–	70.3	70.3
24"	102"	–	100.0	100.0
30"		–	100.0	100.0
36"		–	100.0	100.0
42"		–	100.0	100.0
48"		–	92.9	92.9
54"		–	82.6	82.6
60"		–	74.3	74.3
66"		–	67.6	67.6
72"		–	61.9	61.9

JAMB/MULLION LOAD CAPACITY – PSF
WITH INTERMEDIATE HORIZONTALS

NOMINAL DIMS.		MULL 'M1'	JAMB 'J1' MULL 'M2'	JAMB 'J2' MULL 'M3'
WIDTH (W)	FRAME HEIGHT	EXT. (+) INT. (–)	EXT. (+) INT. (–)	EXT. (+) INT. (–)
24"	108"	–	100.0	100.0
30"		–	100.0	100.0
36"		–	100.0	100.0
42"		–	94.7	94.7
48"		–	82.9	82.9
54"		–	73.7	73.7
60"		–	66.3	66.3
66"		–	60.3	60.3
24"	114"	–	100.0	100.0
30"		–	100.0	100.0
36"		–	94.5	94.5
42"		–	81.0	81.0
48"		–	70.9	70.9
54"		–	63.0	63.0
60"		–	56.7	60.0
24"	120"	–	100.0	100.0
30"		–	97.3	97.3
36"		–	81.1	81.1
42"		–	69.5	69.5
48"		–	60.8	60.8
54"		–	54.0	60.0
60"		–	48.6	60.0
24"	126"	–	–	60.0
30"		–	–	60.0
36"		–	–	60.0
42"		–	–	60.0
48"		–	–	60.0
54"		–	–	60.0
24"	132"	–	–	60.0
30"		–	–	60.0
36"		–	–	60.0
42"		–	–	60.0
48"		–	–	60.0
24"	138"	–	–	60.0
30"		–	–	60.0
36"		–	–	60.0
42"		–	–	60.0
48"		–	–	60.0
24"	144"	–	–	60.0
30"		–	–	60.0
36"		–	–	60.0
42"		–	–	60.0
48"		–	–	55.2

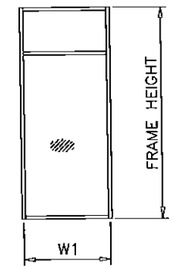

WIDTH (W) = W1 (JAMB)

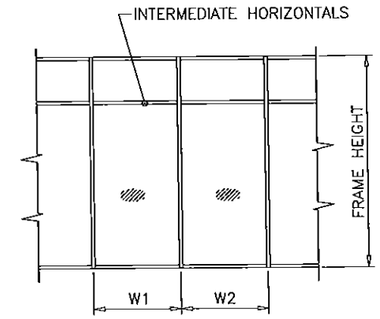

WIDTH (W) = $\frac{W1 + W2}{2}$

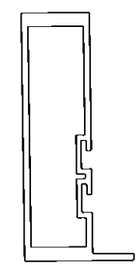

JAMB 'J1'

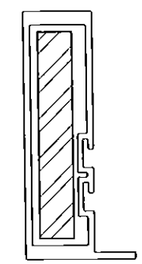

JAMB 'J2'
STEEL REINFORCED

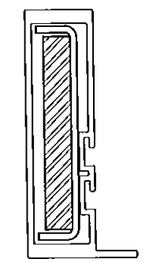

JAMB 'J2'
STEEL REINFORCED
(OPTIONAL)

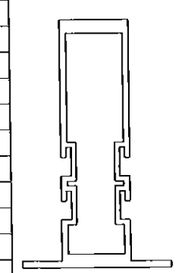

MULLION 'M1'

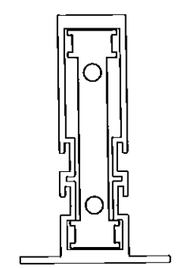

MULLION 'M2'
ALUMINUM REINFORCED

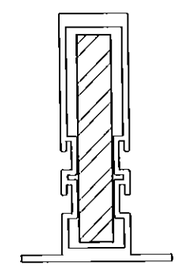

MULLION 'M3'
STEEL REINFORCED

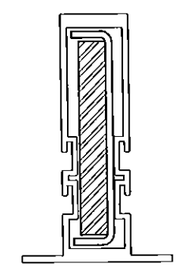

MULLION 'M3'
STEEL REINFORCED
(OPTIONAL)

STEP 3: MULLION LOAD CAPACITIES

Trulite
GLASS & ALUMINUM SOLUTIONS™
http://www.trulite.com
800 FAIRWAY DRIVE, Suite 200
DEERFIELD BEACH, FL 33441
p. 800-432-8132 | f. 954-724-2083

PRODUCT:

Resistor
3100
STOREFRONT WALL-LMI

Resistor
PRODUCT SERIES

REVN	DATE/REMARKS
REV. 1	11/20/15 UPDATE TO 2014FBC

ENGINEER:
MCY ENGINEERING, INC.
GLAZING CONSULTANT
8501 SW 124TH AVE. STE. 205A
MIAMI, FL 33183
P: 305-271-0117
Email: MCY.Engineering@att.net
www.MCYEngineering.com

STAMP:
YIPING WANG, P.E.
FLORIDA REGISTRATION
PE #55983
C.A.N. 28677
No. 55983
STATE OF FLORIDA
PROFESSIONAL ENGINEER

PRODUCT CONTROL APPROVAL:
JAN 20 2015

PRODUCT REVISED
as complying with the Florida
Building Code
Acceptance No 15-0122.02
Expiration Date March 31, 2020
By Manuel Perez
Miami/Dade Product Control

DRAWN: S.L.	DRAWING No:
DATE: 9–22–11	5 OF 13
DWG: AD11–21	

DOOR MULLION LOAD CAPACITY - PSF			
NOMINAL DIMS.		WITHOUT REINFORCING	WITH REINFORCING
WIDTH (W)	FRAME HEIGHT	EXT.(+) / INT.(−)	EXT.(+) / INT.(−)
30"	81−1/4"	87.0	87.0
36"		87.0	87.0
42"		87.0	87.0
48"		87.0	87.0
54"		−	87.0
60"		−	87.0
30"	85−1/4"	87.0	87.0
36"		87.0	87.0
42"		87.0	87.0
48"		84.5	87.0
54"		−	87.0
60"		−	87.0
30"	91−1/4"	87.0	87.0
36"		87.0	87.0
42"		80.7	87.0
48"		−	87.0
54"		−	87.0
60"		−	87.0
30"	97−1/4"	87.0	87.0
36"		77.8	87.0
42"		66.7	87.0
48"		−	87.0
54"		−	87.0
60"		−	79.1
30"	102"	−	87.0
36"		−	87.0
42"		−	87.0
48"		−	87.0
54"		−	79.9
60"		−	71.9
30"	108"	−	87.0
36"		−	87.0
42"		−	87.0
48"		−	79.3
54"		−	70.5
60"		−	63.5
30"	114"	−	87.0
36"		−	87.0
42"		−	77.1
48"		−	67.5
54"		−	60.0
60"		−	54.0
30"	120"	−	87.0
36"		−	77.1
42"		−	66.1
48"		−	57.8
54"		−	51.4
60"		−	46.3

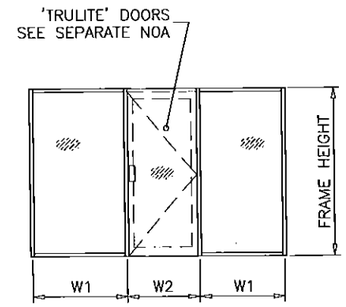

$$\text{WIDTH (W)} = \frac{W1 + W2}{2}$$

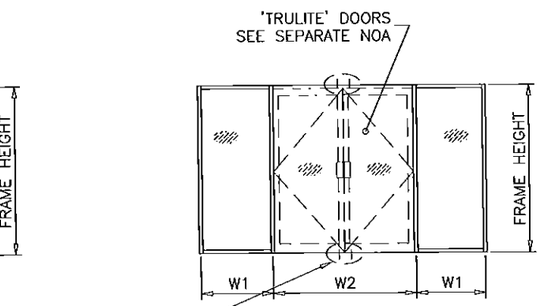

$$\text{WIDTH (W)} = \frac{W1}{2} + \frac{W2}{4}$$

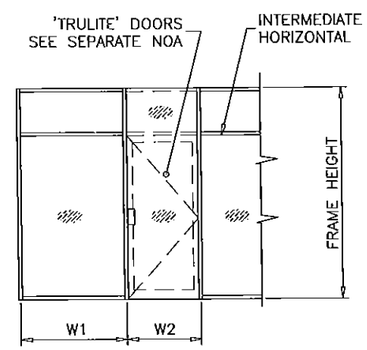

$$\text{WIDTH (W)} = \frac{W1 + W2}{2}$$

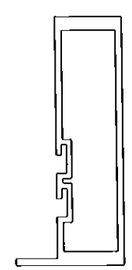

DOOR MULLION
W/O REINF.

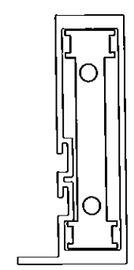

DOOR MULLION
W/ ALUM. REINF.

STEP 3: MULLION LOAD CAPACITIES

Trulite
GLASS & ALUMINUM SOLUTIONS™
http://www.trulite.com
800 FAIRWAY DRIVE, Suite 200
DEERFIELD BEACH, FL 33441
p. 800-432-8132 | f. 954-724-2083

PRODUCT:

Resistor
3100
STOREFRONT WALL-LMI

Resistor
PRODUCT SERIES

REVN	DATE/REMARKS
REV. 1	1/20/15 UPDATE TO 2014FBC

ENGINEER:
MCY ENGINEERING, INC.
GLAZING CONSULTANT
8501 SW 124TH AVE. STE. 205A
MIAMI, FL 33183
P: 305-271-0117
Email: MCY.Engineering@att.net
www.MCYEngineering.com

STAMP:
YIPING WANG, P.E.
FLORIDA REGISTRATION
PE #55983
C.A.#: 28677
No. 55983
STATE OF FLORIDA
PROFESSIONAL ENGINEER

PRODUCT CONTROL APPROVAL:
JAN 20 2015

PRODUCT REVISED
as complying with the Florida
Building Code
Acceptance No 15-0122.02
Expiration Date March 31, 2020
By Manuel Cruz
Miami-Dade Product Control

DRAWN: S.L.	DRAWING No:
DATE: 9−22−11	6 OF 13
DWG: AD11−21	

DOOR MULLION LOAD CAPACITY – PSF AT DOUBLE DOOR WITH TRANSOM

NOMINAL DIMS.				WITHOUT REINFORCING	WITH REINFORCING
WIDTH (W1)	WIDTH (W2)	LENGTH (A)	LENGTH (L)	EXT.(+) INT.(–)	EXT.(+) INT.(–)
60"	30"	96"	102"	78.3	87.0
	33"			75.0	87.0
	36"			71.9	87.0
	39"			69.0	87.0
	42"			66.4	87.0
	48"			61.7	87.0
	54"			57.6	87.0
72"	30"			71.0	87.0
	33"			68.3	87.0
	36"			65.7	87.0
	39"			63.3	87.0
	42"			61.1	87.0
	48"			57.1	87.0
	54"			53.6	87.0
60"	30"	96"	108"	62.6	87.0
	33"			60.0	87.0
	36"			57.7	87.0
	39"			55.5	87.0
	42"			53.5	87.0
	48"			49.8	86.2
	54"			46.7	80.8
72"	30"			56.5	87.0
	33"			54.4	87.0
	36"			52.5	87.0
	39"			50.6	87.0
	42"			49.0	84.7
	48"			45.9	79.4
	54"			43.2	74.8
60"	30"	96"	114"	50.9	87.0
	33"			48.9	84.7
	36"			47.1	81.5
	39"			45.4	78.5
	42"			43.8	75.8
	48"			40.9	70.8
	54"			38.4	66.5
72"	30"			45.8	79.3
	33"			44.2	76.5
	36"			42.7	73.8
	39"			41.3	71.4
	42"			39.9	69.1
	48"			37.5	65.0
	54"			35.4	61.3

DOOR MULLION LOAD CAPACITY – PSF AT DOUBLE DOOR WITH TRANSOM

NOMINAL DIMS.				WITHOUT REINFORCING	WITH REINFORCING
WIDTH (W1)	WIDTH (W2)	LENGTH (A)	LENGTH (L)	EXT.(+) INT.(–)	EXT.(+) INT.(–)
60"	30"	96"	120"	42.1	72.9
	33"			40.5	70.1
	36"			39.1	67.6
	39"			37.7	65.2
	42"			36.4	63.0
	48"			34.1	59.0
	54"			32.0	55.5
72"	30"			37.8	65.4
	33"			36.5	63.2
	36"			35.3	61.1
	39"			34.2	59.1
	42"			33.1	57.3
	48"			31.2	54.0

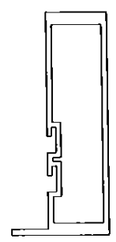

DOOR MULLION W/O REINF.

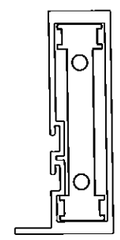

DOOR MULLION W/ ALUM. REINF.

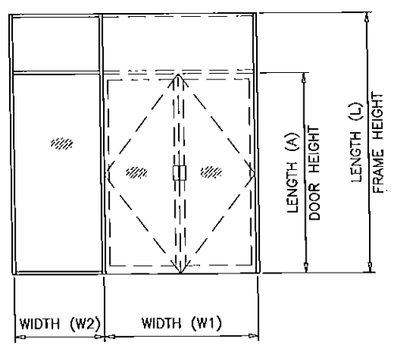

DOOR MULLION LOAD CAPACITY – PSF AT DOUBLE DOOR WITH TRANSOM

NOMINAL DIMS.				WITHOUT REINFORCING	WITH REINFORCING
WIDTH (W1)	WIDTH (W2)	LENGTH (A)	LENGTH (L)	EXT.(+) INT.(–)	EXT.(+) INT.(–)
60"	30"	90"	96"	87.0	87.0
	33"			87.0	87.0
	36"			84.2	87.0
	39"			80.8	87.0
	42"			77.8	87.0
	48"			72.2	87.0
	54"			67.4	87.0
72"	30"			83.4	87.0
	33"			80.1	87.0
	36"			77.0	87.0
	39"			74.2	87.0
	42"			71.6	87.0
	48"			66.9	87.0
	54"			62.7	87.0
60"	30"	90"	102"	73.8	87.0
	33"			70.8	87.0
	36"			68.1	87.0
	39"			65.5	87.0
	42"			63.1	87.0
	48"			58.9	87.0
	54"			55.1	87.0
72"	30"			66.6	87.0
	33"			64.1	87.0
	36"			61.9	87.0
	39"			59.8	87.0
	42"			57.8	87.0
	48"			54.2	87.0
	54"			51.0	86.4
60"	30"	90"	108"	59.4	87.0
	33"			57.1	87.0
	36"			55.0	87.0
	39"			53.0	87.0
	42"			51.2	87.0
	48"			47.8	82.8
	54"			44.9	77.7
72"	30"			53.4	87.0
	33"			51.6	87.0
	36"			49.8	86.2
	39"			48.2	83.4
	42"			46.6	80.7
	48"			43.9	75.9
	54"			41.4	71.6

DOOR MULLION LOAD CAPACITY – PSF AT DOUBLE DOOR WITH TRANSOM

NOMINAL DIMS.				WITHOUT REINFORCING	WITH REINFORCING
WIDTH (W1)	WIDTH (W2)	LENGTH (A)	LENGTH (L)	EXT.(+) INT.(–)	EXT.(+) INT.(–)
60"	30"	90"	114"	48.7	84.3
	33"			46.9	81.2
	36"			45.2	78.2
	39"			43.6	75.5
	42"			42.2	73.0
	48"			39.5	68.3
	54"			37.1	64.3
72"	30"			43.7	75.6
	33"			42.2	73.1
	36"			40.8	70.7
	39"			39.5	68.4
	42"			38.3	66.3
	48"			36.1	62.5
	54"			34.1	59.1
60"	30"	90"	120"	40.6	70.3
	33"			39.1	67.7
	36"			37.7	65.3
	39"			36.5	63.1
	42"			35.3	61.0
	48"			33.1	57.2
	54"			31.1	53.9
72"	30"			36.3	62.9
	33"			35.1	60.8
	36"			34.0	58.9
	39"			33.0	57.0
	42"			32.0	55.3
	48"			30.2	52.2

STEP 3: MULLION LOAD CAPACITIES

Trulite
GLASS & ALUMINUM SOLUTIONS™
http://www.trulite.com
800 FAIRWAY DRIVE, Suite 200
DEERFIELD BEACH, Fl. 33441
p. 800-432-8132 | f. 954-724-2083

PRODUCT:

Resistor
3100
STOREFRONT WALL-LMI

Resistor PRODUCT SERIES

REVN	DATE/REMARKS
REV. 1	1/20/15 UPDATE TO 2014FBC

ENGINEER:
MCY ENGINEERING, INC.
GLAZING CONSULTANT
8501 SW 124TH AVE. STE. 205A
MIAMI, FL 33183
P: 305-271-0117
Email: MCY.Engineering@att.net
www.MCYEngineering.com

STAMP:
YIPING WANG, P.E.
FLORIDA REGISTRATION
LIC. #55983
C.A.N. 28677
No. 55983
STATE OF FLORIDA
PROFESSIONAL ENGINEER

PRODUCT CONTROL APPROVAL:
JAN 20 2015

PRODUCT REVISED
as complying with the Florida Building Code
Acceptance No 15-0122.02
Expiration Date March 31, 2020
By Manuel Perez
Miami-Dade Product Control

DRAWN: S.L.	DRAWING No:
DATE: 9-22-11	7 OF 13
DWG: AD11-21	

DOOR MULLION LOAD CAPACITY – PSF AT DOUBLE DOOR WITH TRANSOM

NOMINAL DIMS.				WITHOUT REINFORCING	WITH REINFORCING
WIDTH (W1)	WIDTH (W2)	LENGTH (A)	LENGTH (L)	EXT.(+) INT.(–)	EXT.(+) INT.(–)
60"	30"	84"	90"	87.0	87.0
	33"			87.0	87.0
	36"			87.0	87.0
	39"			87.0	87.0
	42"			87.0	87.0
	48"			82.7	87.0
	54"			77.3	87.0
72"	30"			87.0	87.0
	33"			87.0	87.0
	36"			87.0	87.0
	39"			84.9	87.0
	42"			81.9	87.0
	48"			76.6	87.0
	54"			71.9	87.0
60"	30"	84"	96"	87.0	87.0
	33"			84.0	87.0
	36"			80.7	87.0
	39"			77.7	87.0
	42"			74.8	87.0
	48"			69.7	87.0
	54"			65.3	87.0
72"	30"			79.0	87.0
	33"			76.1	87.0
	36"			73.4	87.0
	39"			70.9	87.0
	42"			68.5	87.0
	48"			64.2	87.0
	54"			60.4	87.0
60"	30"	84"	102"	70.0	87.0
	33"			67.3	87.0
	36"			64.8	87.0
	39"			62.4	87.0
	42"			60.3	87.0
	48"			56.4	87.0
	54"			53.0	87.0
72"	30"			62.8	87.0
	33"			60.7	87.0
	36"			58.6	87.0
	39"			56.7	87.0
	42"			54.9	87.0
	48"			51.7	87.0
	54"			48.8	83.9

DOOR MULLION LOAD CAPACITY – PSF AT DOUBLE DOOR WITH TRANSOM

NOMINAL DIMS.				WITHOUT REINFORCING	WITH REINFORCING
WIDTH (W1)	WIDTH (W2)	LENGTH (A)	LENGTH (L)	EXT.(+) INT.(–)	EXT.(+) INT.(–)
60"	30"	84"	108"	56.8	87.0
	33"			54.7	87.0
	36"			52.7	87.0
	39"			50.9	87.0
	42"			49.2	85.1
	48"			46.1	79.8
	54"			43.4	75.1
72"	30"			50.9	87.0
	33"			49.2	85.1
	36"			47.6	82.4
	39"			46.1	79.8
	42"			44.7	77.4
	48"			42.1	72.9
	54"			39.9	69.0
60"	30"	84"	114"	46.9	81.2
	33"			45.2	78.3
	36"			43.7	75.5
	39"			42.2	73.0
	42"			40.8	70.6
	48"			38.3	66.3
	54"			36.1	62.5
72"	30"			42.0	72.6
	33"			40.6	70.3
	36"			39.3	68.0
	39"			38.1	66.0
	42"			37.0	64.0
	48"			34.9	60.4
	54"			33.1	57.2
60"	30"	84"	120"	39.3	68.1
	33"			38.0	65.7
	36"			36.7	63.4
	39"			35.4	61.3
	42"			34.3	59.4
	48"			32.2	55.8
	54"			30.4	52.6
72"	30"			35.1	60.8
	33"			34.0	58.8
	36"			33.0	57.0
	39"			32.0	55.3
	42"			31.0	53.7
	48"			29.3	50.8

DOOR MULLION LOAD CAPACITY – PSF AT DOUBLE DOOR WITH TRANSOM

NOMINAL DIMS.				WITHOUT REINFORCING	WITH REINFORCING
WIDTH (W1)	WIDTH (W2)	LENGTH (A)	LENGTH (L)	EXT.(+) INT.(–)	EXT.(+) INT.(–)
60"	30"	80"	90"	87.0	87.0
	33"			87.0	87.0
	36"			87.0	87.0
	39"			87.0	87.0
	42"			86.6	87.0
	48"			80.7	87.0
	54"			75.5	87.0
72"	30"			87.0	87.0
	33"			87.0	87.0
	36"			85.1	87.0
	39"			82.2	87.0
	42"			79.4	87.0
	48"			74.4	87.0
	54"			70.0	87.0
60"	30"	80"	96"	84.6	87.0
	33"			81.3	87.0
	36"			78.3	87.0
	39"			75.5	87.0
	42"			72.9	87.0
	48"			68.1	87.0
	54"			64.0	87.0
72"	30"			76.1	87.0
	33"			73.4	87.0
	36"			70.9	87.0
	39"			68.6	87.0
	42"			66.4	87.0
	48"			62.5	87.0
	54"			58.9	87.0
60"	30"	80"	102"	67.8	87.0
	33"			65.2	87.0
	36"			62.9	87.0
	39"			60.7	87.0
	42"			58.7	87.0
	48"			55.0	87.0
	54"			51.7	87.0
72"	30"			60.7	87.0
	33"			58.7	87.0
	36"			56.8	87.0
	39"			55.0	87.0
	42"			53.3	87.0
	48"			50.2	87.0
	54"			47.5	82.2

DOOR MULLION LOAD CAPACITY – PSF AT DOUBLE DOOR WITH TRANSOM

NOMINAL DIMS.				WITHOUT REINFORCING	WITH REINFORCING
WIDTH (W1)	WIDTH (W2)	LENGTH (A)	LENGTH (L)	EXT.(+) INT.(–)	EXT.(+) INT.(–)
60"	30"	80"	108"	55.3	87.0
	33"			53.3	87.0
	36"			51.5	87.0
	39"			49.7	86.1
	42"			48.1	83.2
	48"			45.1	78.1
	54"			42.5	73.6
72"	30"			49.5	85.6
	33"			47.9	82.8
	36"			46.4	80.2
	39"			44.9	77.8
	42"			43.6	75.5
	48"			41.2	71.2
	54"			39.0	67.5
60"	30"	80"	114"	45.9	79.5
	33"			44.3	76.7
	36"			42.8	74.1
	39"			41.4	71.6
	42"			40.0	69.3
	48"			37.6	65.1
	54"			35.5	61.4
72"	30"			41.0	71.0
	33"			39.7	68.7
	36"			38.5	66.6
	39"			37.3	64.6
	42"			36.2	62.7
	48"			34.3	59.3
	54"			32.5	56.2
60"	30"	80"	120"	38.7	66.9
	33"			37.3	64.6
	36"			36.1	62.4
	39"			34.9	60.4
	42"			33.8	58.5
	48"			31.8	55.0
	54"			30.0	51.9
72"	30"			34.5	59.7
	33"			33.4	57.8
	36"			32.4	56.0
	39"			31.4	54.4
	42"			30.5	52.9
	48"			28.9	50.0

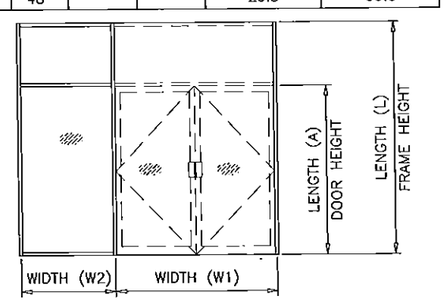

STEP 3: MULLION LOAD CAPACITIES

Trulite
GLASS & ALUMINUM SOLUTIONS™
http://www.trulite.com
800 FAIRWAY DRIVE, Suite 200
DEERFIELD BEACH, FL 33441
p. 800-432-8132 | f. 954-724-2083

PRODUCT:

Resistor
3100
STOREFRONT WALL-LMI

Resistor
PRODUCT SERIES

REVN	DATE/REMARKS
REV. 1	1/20/15 UPDATE TO 2014FBC

ENGINEER:
MCY ENGINEERING, INC.
GLAZING CONSULTANT
8501 SW 124TH AVE. STE. 205A
MIAMI, FL 33183
P: 305-271-0117
Email: MCY.Engineering@att.net
www.MCYEngineering.com

STAMP:
YIPING WANG, P.E.
FLORIDA REGISTRATION
PE: #55983
C.A.N. 28677
No. 55983
STATE OF FLORIDA
PROFESSIONAL ENGINEER

PRODUCT CONTROL APPROVAL:
JAN 20 2015

PRODUCT REVISED
as complying with the Florida Building Code
Acceptance No 15-0122.02
Expiration Date March 31, 2020
By Manuel Perez
Miami-Dade Product Control

DRAWN: S.L.	DRAWING No:
DATE: 9–22–11	8 OF 13
DWG: AD11–21	

ANCHOR LOAD CAPACITY – PSF
EXT.(+) & INT.(–)

NOMINAL DIMS.		ANCHORS TYPE 'A'			TYPE 'B' & 'C'	
WIDTH (W)	FRAME HEIGHT	'A2'	'A3'	'A4'	'B1'/'C1'	'B2'/'C2'
24"	66"	100.0	100.0	100.0	100.0	100.0
30"		100.0	100.0	100.0	100.0	100.0
36"		100.0	100.0	100.0	100.0	100.0
42"		100.0	100.0	100.0	100.0	100.0
48"		100.0	100.0	100.0	100.0	100.0
54"		95.4	100.0	100.0	95.8	100.0
60"		85.8	100.0	100.0	86.2	100.0
66"		78.0	100.0	100.0	78.3	100.0
72"		71.5	100.0	100.0	71.8	100.0
24"	72"	100.0	100.0	100.0	100.0	100.0
30"		100.0	100.0	100.0	100.0	100.0
36"		100.0	100.0	100.0	100.0	100.0
42"		100.0	100.0	100.0	100.0	100.0
48"		98.3	100.0	100.0	98.8	100.0
54"		87.4	100.0	100.0	87.8	100.0
60"		78.7	100.0	100.0	79.0	100.0
66"		71.5	100.0	100.0	71.8	100.0
72"		65.6	91.8	100.0	65.8	100.0
24"	78"	100.0	100.0	100.0	100.0	100.0
30"		100.0	100.0	100.0	100.0	100.0
36"		100.0	100.0	100.0	100.0	100.0
42"		100.0	100.0	100.0	100.0	100.0
48"		90.8	100.0	100.0	91.2	100.0
54"		80.7	100.0	100.0	81.0	100.0
60"		72.6	100.0	100.0	72.9	100.0
66"		66.0	92.4	100.0	66.3	100.0
72"		60.5	84.7	100.0	60.8	100.0
24"	84"	100.0	100.0	100.0	100.0	100.0
30"		100.0	100.0	100.0	100.0	100.0
36"		100.0	100.0	100.0	100.0	100.0
42"		96.3	100.0	100.0	96.7	100.0
48"		84.3	100.0	100.0	84.6	100.0
54"		74.9	100.0	100.0	75.2	100.0
60"		67.4	94.4	100.0	67.7	100.0
66"		61.3	85.8	100.0	61.6	100.0
72"		56.2	78.7	100.0	56.4	94.0
24"	90"	100.0	100.0	100.0	100.0	100.0
30"		100.0	100.0	100.0	100.0	100.0
36"		100.0	100.0	100.0	100.0	100.0
42"		89.9	100.0	100.0	90.3	100.0
48"		78.7	100.0	100.0	79.0	100.0
54"		69.9	97.9	100.0	70.2	100.0
60"		62.9	88.1	100.0	63.2	100.0
66"		57.2	80.1	100.0	57.5	95.8
72"		52.4	73.4	94.4	52.7	87.8
24"	96"	100.0	100.0	100.0	100.0	100.0
30"		100.0	100.0	100.0	100.0	100.0
36"		98.3	100.0	100.0	98.8	100.0
42"		84.3	100.0	100.0	84.6	100.0
48"		73.8	100.0	100.0	74.1	100.0
54"		65.6	91.8	100.0	65.8	100.0
60"		59.0	82.6	100.0	59.3	98.8
66"		53.6	75.1	96.5	53.9	89.8

ANCHOR LOAD CAPACITY – PSF
EXT.(+) & INT.(–)

NOMINAL DIMS.		ANCHORS TYPE 'A'			TYPE 'B' & 'C'	
WIDTH (W)	FRAME HEIGHT	'A2'	'A3'	'A4'	'B1'/'C1'	'B2'/'C2'
24"	102"	100.0	100.0	100.0	100.0	100.0
30"		100.0	100.0	100.0	100.0	100.0
36"		92.5	100.0	100.0	92.9	100.0
42"		79.3	100.0	100.0	79.7	100.0
48"		69.4	97.2	100.0	69.7	100.0
54"		61.7	86.4	100.0	62.0	100.0
60"		55.5	77.7	100.0	55.8	92.9
24"	108"	100.0	100.0	100.0	100.0	100.0
30"		100.0	100.0	100.0	100.0	100.0
36"		87.4	100.0	100.0	87.8	100.0
42"		74.9	100.0	100.0	75.2	100.0
48"		65.6	91.8	100.0	65.8	100.0
54"		58.3	81.6	100.0	58.5	97.5
60"		52.4	73.4	94.4	52.7	87.8
24"	114"	100.0	100.0	100.0	100.0	100.0
30"		99.4	100.0	100.0	99.8	100.0
36"		82.8	100.0	100.0	83.2	100.0
42"		71.0	99.4	100.0	71.3	100.0
48"		62.1	86.9	100.0	62.4	100.0
54"		55.2	77.3	99.4	55.4	92.4
24"	120"	100.0	100.0	100.0	100.0	100.0
30"		94.4	100.0	100.0	94.8	100.0
36"		78.7	100.0	100.0	79.0	100.0
42"		67.4	94.4	100.0	67.7	100.0
48"		59.0	82.6	100.0	59.3	98.8
54"		52.4	73.4	94.4	52.7	87.8
24"	126"	60.0	60.0	60.0	60.0	60.0
30"		60.0	60.0	60.0	60.0	60.0
36"		60.0	60.0	60.0	60.0	60.0
42"		60.0	60.0	60.0	60.0	60.0
48"		56.2	60.0	60.0	56.4	60.0
54"		49.9	60.0	60.0	50.2	60.0
24"	132"	60.0	60.0	60.0	60.0	60.0
30"		60.0	60.0	60.0	60.0	60.0
36"		60.0	60.0	60.0	60.0	60.0
42"		60.0	60.0	60.0	60.0	60.0
48"		53.6	60.0	60.0	53.9	60.0
24"	138"	60.0	60.0	60.0	60.0	60.0
30"		60.0	60.0	60.0	60.0	60.0
36"		60.0	60.0	60.0	60.0	60.0
42"		58.6	60.0	60.0	58.9	60.0
48"		51.3	60.0	60.0	51.5	60.0
24"	144"	60.0	60.0	60.0	60.0	60.0
30"		60.0	60.0	60.0	60.0	60.0
36"		60.0	60.0	60.0	60.0	60.0
42"		56.2	60.0	60.0	56.4	60.0
48"		49.2	60.0	60.0	49.4	60.0

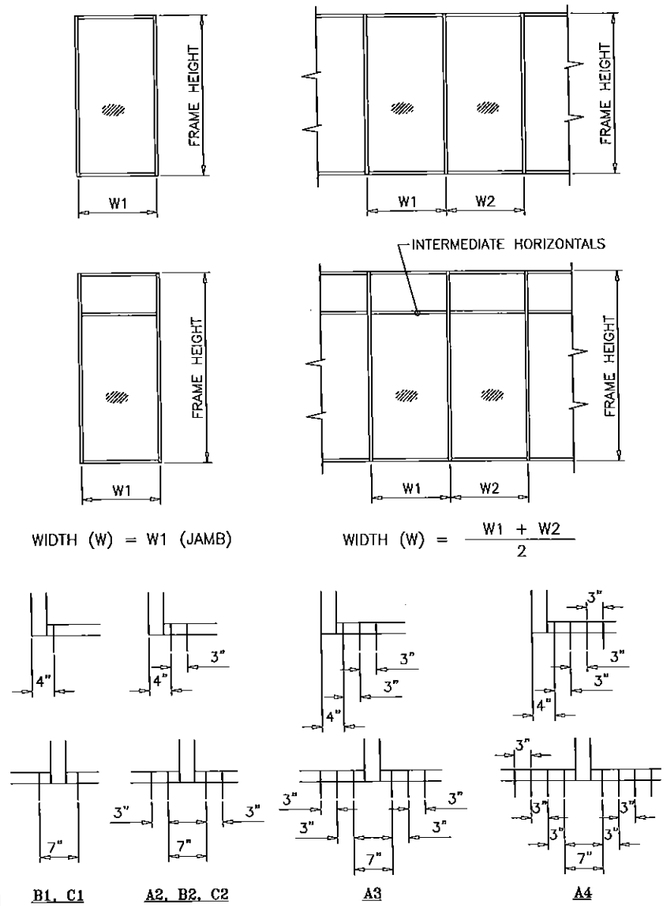

ANCHORS TYPES: SEE SHEET 10 FOR DESCRIPTION

B1 = (1) ANCHOR TYPE 'B' AT EACH SIDE OF MULLION OR JAMB
C1 = (1) ANCHOR TYPE 'C' AT EACH SIDE OF MULLION OR JAMB

A2 = (2) ANCHORS TYPE 'A' AT EACH SIDE OF MULLION OR JAMB
B2 = (2) ANCHORS TYPE 'B' AT EACH SIDE OF MULLION OR JAMB
C2 = (2) ANCHORS TYPE 'C' AT EACH SIDE OF MULLION OR JAMB

A3 = (3) ANCHORS TYPE 'A' AT EACH SIDE OF MULLION OR JAMB

A4 = (4) ANCHORS TYPE 'A' AT EACH SIDE OF MULLION OR JAMB

MAXIMUM SPACING FOR HEAD AND SILL ANCHORS NOT TO EXCEED 24" O.C.

STEP 4: ANCHOR LOAD CAPACITY

Trulite
GLASS & ALUMINUM SOLUTIONS™
http://www.trulite.com
800 FAIRWAY DRIVE, Suite 200
DEERFIELD BEACH, FL 33441
p. 800-432-8132 | f. 954-724-2083

PRODUCT:

Resistor 3100
STOREFRONT WALL-LMI

Resistor PRODUCT SERIES

REVN	DATE/REMARKS
REV. 1	1/20/15 UPDATE TO 2014FBC

ENGINEER:
MCY ENGINEERING, INC.
GLAZING CONSULTANT
8501 SW 124TH AVE. STE. 205A
MIAMI, FL 33183
P: 305-271-0117
Email: MCY.Engineering@att.net
www.MCYEngineering.com

STAMP:
YIPING WANG, P.E.
FLORIDA REGISTRATION
PE #55983
C.O.A. 28677
No. 55983
STATE OF FLORIDA
PROFESSIONAL ENGINEER

PRODUCT CONTROL APPROVAL:
JAN 20 2015
PRODUCT REVISED
as complying with the Florida Building Code
Acceptance No 15-0122.02
Expiration Date March 31, 2020
By Manuel Perez
Miami-Dade Product Control

DRAWN: S.L.
DATE: 9–22–11
DWG: AD11–21

DRAWING No:
9 OF 13

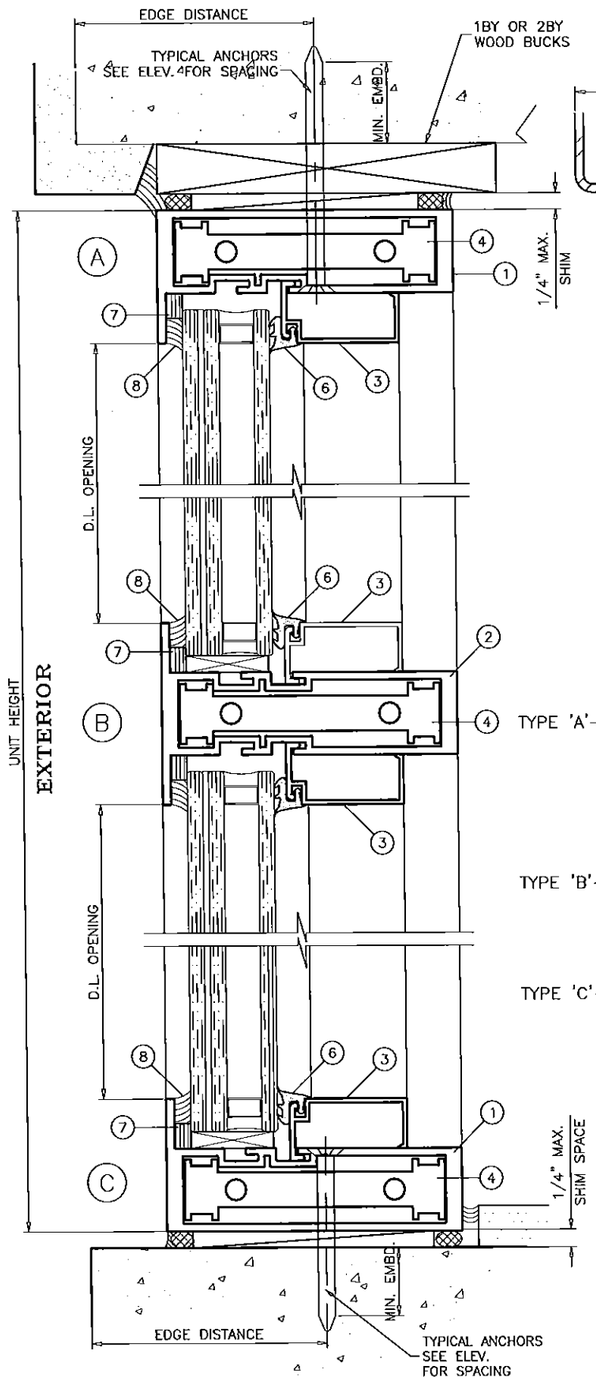

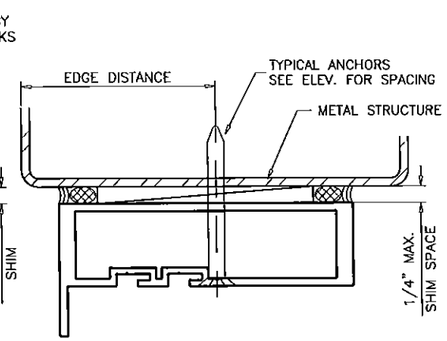

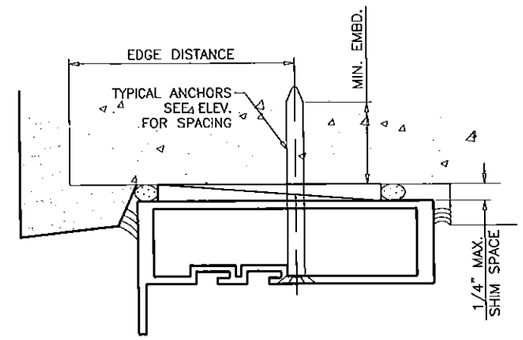

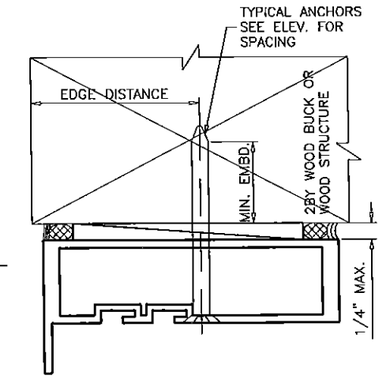

NOTE:
MULLIONS SHOWN IN DASHED LINES ARE NOT PART OF THIS APPROVAL.

WOOD BUCKS AND METAL STRUCTURE NOT BY TRULITE. MUST SUSTAIN LOADS IMPOSED BY GLAZING SYSTEM AND TRANSFER THEM TO THE BUILDING STRUCTURE.

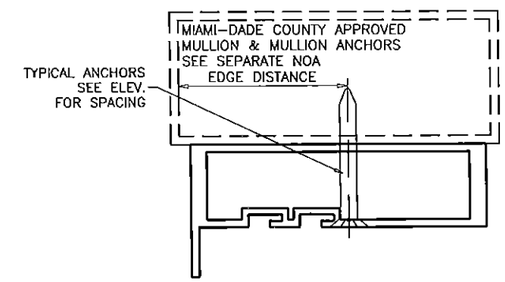

TYPICAL ANCHORS AT WINDOW WALL SYSTEM: SEE ELEV. FOR SPACING

TYPE 'A'– 1/4" DIA. ULTRACON BY 'ELCO' (Fu=177 KSI, Fy=155 KSI)

INTO 2BY WOOD BUCKS OR WOOD STRUCTURES
1–3/8" MIN. PENETRATION INTO WOOD

THRU 1BY BUCKS INTO CONC. OR HOLLOW BLOCK
1–1/4" MIN. EMBED INTO CONC. OR HOLLOW BLOCK
1–3/4" MIN. EMBED INTO GROUT FILLED BLOCK

TYPE 'B'– 1/4" DIA. ULTRACON BY 'ELCO' (Fu=177 KSI, Fy=155 KSI)

DIRECTLY INTO CONC. OR HOLLOW BLOCK
1–5/8" MIN. EMBED INTO CONC. OR HOLLOW BLOCK
1–3/4" MIN. EMBED INTO GROUT FILLED BLOCK

TYPE 'C'– #14 SMS OR SELF DRILLING SCREWS (GRADE 2 CRS)

INTO MIAMI–DADE COUNTY APPROVED MULLIONS (1/8" THK. MIN.)
INTO METAL STRUCTURES
STEEL : 1/8" THK. MIN. (Fy = 36 KSI MIN.)
ALUMINUM : 1/8" THK. MIN. (6063–T5 MIN.)
(STEEL IN CONTACT WITH ALUMINUM TO BE PLATED OR PAINTED)

TYPICAL EDGE DISTANCE

INTO CONCRETE AND MASONRY = 2–1/2" MIN.
INTO WOOD STRUCTURE = 1" MIN.
INTO METAL STRUCTURE = 3/4" MIN.

TYPICAL ANCHORS AT ALTERNATE WINDOW SHAPES: SEE SHEET 2 FOR SPACING

TYPE 'D'– 5/16" DIA. ULTRACON BY 'ELCO' (Fu=177 KSI, Fy=155 KSI)

INTO 2BY WOOD BUCKS OR WOOD STRUCTURES
1–3/8" MIN. PENETRATION INTO WOOD

THRU 1BY BUCKS INTO CONC. OR HOLLOW BLOCK
1–1/4" MIN. EMBED INTO CONC. OR HOLLOW BLOCK
1–3/4" MIN. EMBED INTO GROUT FILLED BLOCK

DIRECTLY INTO CONC. OR HOLLOW BLOCK
1–5/8" MIN. EMBED INTO CONC. OR HOLLOW BLOCK
1–3/4" MIN. EMBED INTO GROUT FILLED BLOCK

TYPE 'D'– 5/16" DIA. SMS OR SELF DRILLING SCREWS (GRADE 2 CRS)

INTO MIAMI–DADE COUNTY APPROVED MULLIONS (1/8" THK. MIN.)
INTO METAL STRUCTURES
STEEL : 1/8" THK. MIN. (Fy = 36 KSI MIN.)
ALUMINUM : 1/8" THK. MIN. (6063–T5 MIN.)
(STEEL IN CONTACT WITH ALUMINUM TO BE PLATED OR PAINTED)

TYPICAL EDGE DISTANCE

INTO CONCRETE AND MASONRY = 3–1/8" MIN.
INTO WOOD STRUCTURE = 1" MIN.
INTO METAL STRUCTURE = 3/4" MIN.

CONCRETE AT HEAD, SILL OR JAMBS f'c = 3000 PSI MIN.
C–90 HOLLOW/FILLED BLOCK AT JAMBS f'm = 2000 PSI MIN.

Trulite
GLASS & ALUMINUM SOLUTIONS™
http://www.trulite.com
800 FAIRWAY DRIVE, Suite 200
DEERFIELD BEACH, FL 33441
p. 800-432-8132 | f. 954-724-2083

PRODUCT:

Resistor 3100
STOREFRONT WALL-LMI

Resistor PRODUCT SERIES

REVN	DATE/REMARKS
REV. 1	11/20/15 UPDATE TO 2014FBC

ENGINEER:
MCY ENGINEERING, INC.
GLAZING CONSULTANT
8501 SW 124TH AVE. STE. 205A
MIAMI, FL 33183
P: 305-271-0117
Email: MCY.Engineering@att.net
www.MCYEngineering.com

STAMP:
YIPING WANG, P.E.
FLORIDA REGISTRATION
RE #55983
C.A.N. 28677
No. 55983
STATE OF FLORIDA
PROFESSIONAL ENGINEER

PRODUCT CONTROL APPROVAL:
JAN 20 2015

PRODUCT REVISED
as complying with the Florida Building Code
Acceptance No 15-0122.02
Expiration Date March 31, 2020
By Manuel Perez
Miami Dade Product Control

DRAWN: S.L.	DRAWING No:
DATE: 9–22–11	10 OF 13
DWG: AD11–21	

THIS PRODUCT MAY BE INSTALLED INSIDE OR OUTSIDE GLAZED

BILL OF MATERIALS

ITEM #	QTY.	PROFILE	DESCRIPTION	MATERIAL	MANUFACTURER/REMARKS
1	AS REQD.	3101	FRAME HEAD/JAMB/JAMB	ALUM. 6063-T6	TRULITE
2	AS REQD.	3102	INTERMEDIATE VERTICAL/HORIZONTAL	ALUM. 6063-T6	TRULITE
3	AS REQD.	3103	GLASS STOP	ALUM. 6063-T5	TRULITE
4	AS REQD.	3104	SHEAR BLOCK/MULLION REINFORCING	ALUM. 6063-T6	TRULITE
4A	AS REQD.	3205STEEL	MULLION REINFORCING	STEEL BAR	Fy = 36 ksi Min.
5	2/LITE	H62F	SETTING BLOCK (INSUL, LAM. GLASS) DUROMETER 85 +/-5	EPDM	1-1/4" X 1/4" X 4" LONG
5A	2/LITE	H62D	SETTING BLOCK (9/16" LAM. GLASS) DUROMETER 85 +/-5	EPDM	1/2" X 1/4" X 4" LONG
6	AS REQD.	H63	WEDGE IN GASKET DUROMETER 60 +/-5	EPDM	-
7	AS REQD.	V2100	GLAZING FOAM TAPE	-	NORTON 1/4" X 3/8"
8	AS REQD.	995	GLAZING SEALANT	SILICONE	DOW CORNING
9	2/CORNER	S14	#12-14 X 3/4" FHPMS TYPE 23	STAINLESS STL.	-
10	2/CORNER	P13	1/4-20 X 1-1/2" PHMS TYPE 23	STAINLESS STL.	-
11	AS REQD.	-	STEEL REINFORCEMENT OPTION	STEEL BAR	Fy = 36 ksi Min.

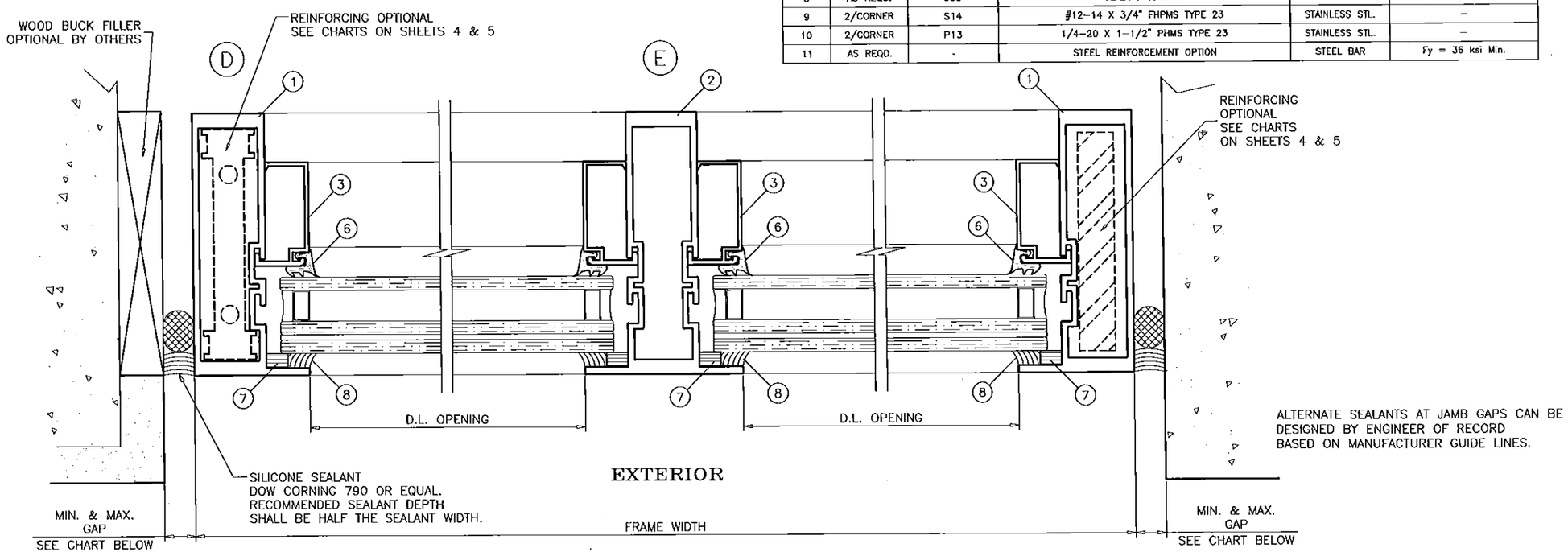

ALTERNATE SEALANTS AT JAMB GAPS CAN BE DESIGNED BY ENGINEER OF RECORD BASED ON MANUFACTURER GUIDE LINES.

MAX. FRAME HEIGHT	GAP	
	MIN.	MAX.
60"	3/16"	1-1/8"
72"	1/4"	1-1/8"
84"	1/4"	1-1/8"
96"	3/8"	1-1/8"
108"	3/8"	1-1/8"
120"	1/2"	1-1/8"

MAX. FRAME WIDTH	MAX. GAP AT EACH SIDE
30 FT.	1-1/8"
60 FT.	1-1/8"

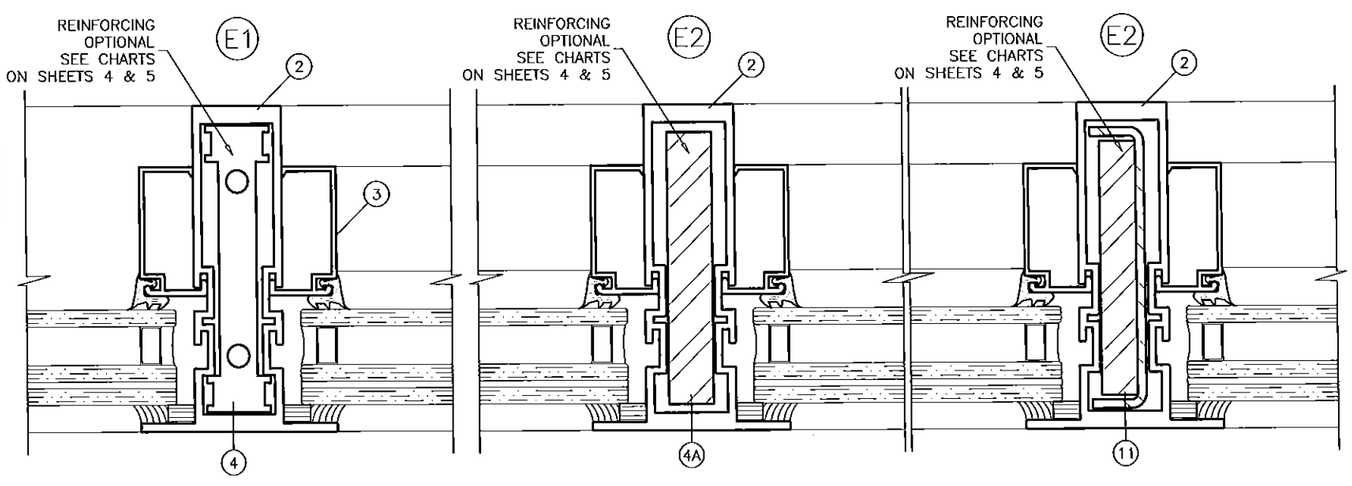

Trulite
GLASS & ALUMINUM SOLUTIONS™
http://www.trulite.com
800 FAIRWAY DRIVE, Suite 200
DEERFIELD BEACH, FL 33441
p. 800-432-8132 | f. 954-724-2083

PRODUCT:

Resistor
3100
STOREFRONT WALL-LMI

Resistor
PRODUCT SERIES

REVN	DATE/REMARKS
REV. 1	1/20/15 UPDATE TO 2014FBC

ENGINEER:
MCY ENGINEERING, INC.
GLAZING CONSULTANT
8501 SW 124TH AVE. STE. 205A
MIAMI, FL 33183
P: 305-271-0117
Email: MCY.Engineering@att.net
www.MCYEngineering.com

STAMP:
YIPING WANG, P.E.
FLORIDA REGISTRATION
P.E. #55983
C.A.N. 28677
No. 55983
STATE OF FLORIDA
PROFESSIONAL ENGINEER

PRODUCT CONTROL APPROVAL:
JAN 20 2015

PRODUCT REVISED
as complying with the Florida
Building Code
Acceptance No 15-0122.02
Expiration Date March 31, 2020
By Manuel Perez
Miami-Dade Product Control

DRAWN: S.L.
DATE: 9-22-11
DWG: AD11-21

DRAWING No:
11 OF 13

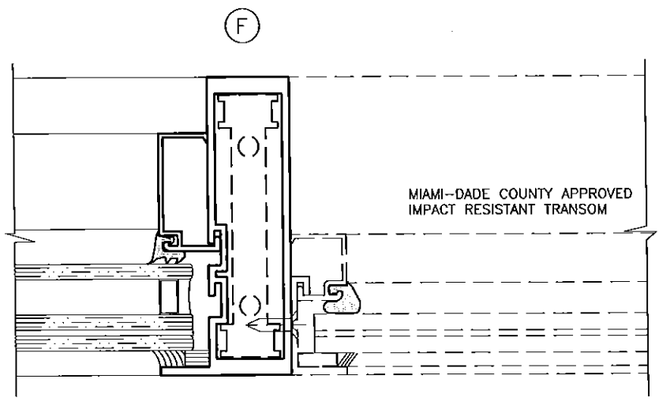

TOTAL NO. OF ANCHORS AT DOOR MULLION HEAD				
ANCHORS TYPE	MULLION W/O REINFORCING		MULLION WITH REINFORCING	
	AT FIX. LITE	AT DOOR	AT FIX. LITE	AT DOOR
A	3	3	4	3
B	2	2	3	2
C	2	2	3	2

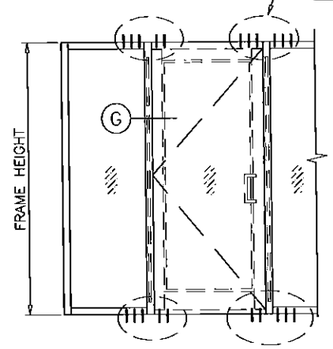

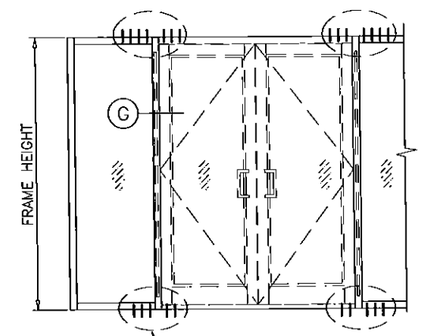

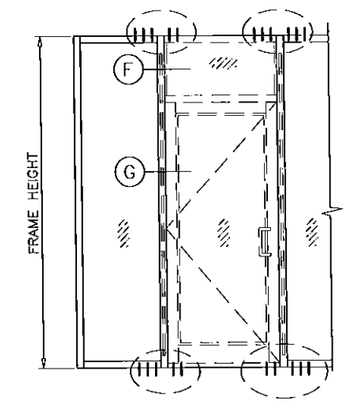

TOTAL NO. OF ANCHORS AT DOOR MULLION SILL				
ANCHORS TYPE	MULLION W/O REINFORCING		MULLION WITH REINFORCING	
	AT FIX. LITE	AT DOOR	AT FIX. LITE	AT DOOR
B	2	2	3	2
C	2	2	3	2

CHARTS SHOWN ABOVE APPLY TO ABOVE CASES ONLY.

SEE SEPARATE NOA FOR DESIGN LOAD CAPACITY OF DOORS AND DOOR ANCHORS.

LOWER VALUES FROM DOORS NOA OR WINDOW WALL SYSTEM CAPACITY CHARTS WILL APPLY TO ENTIRE SYSTEM.

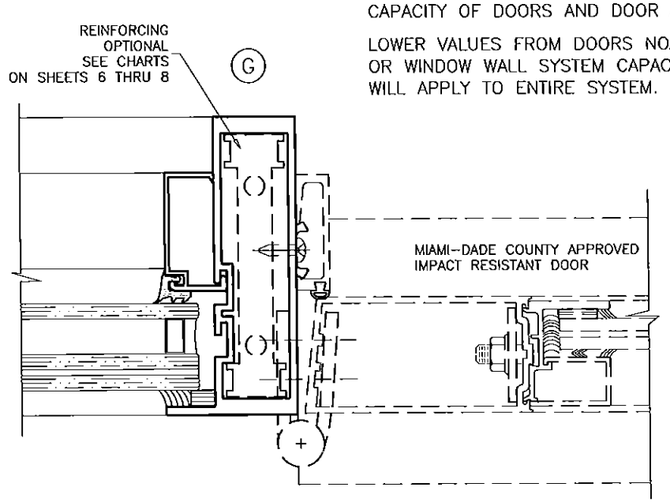

TOTAL NO. OF ANCHORS AT DOOR MULLION HEAD				
ANCHORS TYPE	MULLION W/O REINFORCING		MULLION WITH REINFORCING	
	AT FIX. LITE	AT DOOR	AT FIX. LITE	AT DOOR
A	4	3	5	4
B	2	2	3	3
C	2	2	3	3

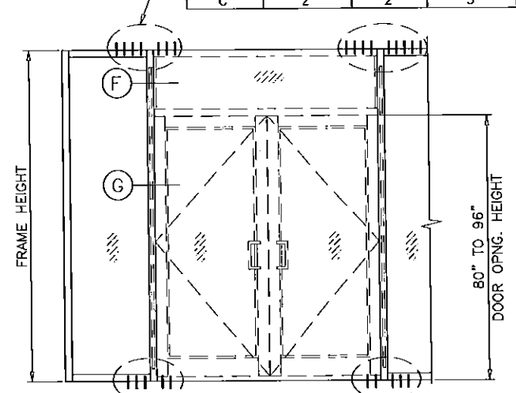

TOTAL NO. OF ANCHORS AT DOOR MULLION SILL				
ANCHORS TYPE	MULLION W/O REINFORCING		MULLION WITH REINFORCING	
	AT FIX. LITE	AT DOOR	AT FIX. LITE	AT DOOR
B	2	2	3	2
C	2	2	3	2

Trulite
GLASS & ALUMINUM SOLUTIONS™
http://www.trulite.com
800 FAIRWAY DRIVE, Suite 200
DEERFIELD BEACH, FL 33441
p. 800-432-8132 | f. 954-724-2083

PRODUCT:

Resistor
3100
STOREFRONT WALL-LMI

Resistor
PRODUCT SERIES

REVN	DATE/REMARKS
REV. 1	11/20/15 UPDATE TO 2014FBC

ENGINEER:
MCY ENGINEERING, INC.
GLAZING CONSULTANT
8501 SW 124TH AVE. STE. 205A
MIAMI, FL 33183
P: 305-271-0117
Email: MCY.Engineering@all.net
www.MCYEngineering.com

STAMP:

YIPING WANG, P.E.
FLORIDA REGISTRATION
PE 55983
LICENSE 28677
No. 55983
STATE OF FLORIDA
PROFESSIONAL ENGINEER

PRODUCT CONTROL APPROVAL:
JAN 20 2015

PRODUCT REVISED
as complying with the Florida
Building Code
Acceptance No 15-0122.02
Expiration Date March 31, 2020
By Manuel Ruiz
Miami Dade Product Control

DRAWN: S.L.	DRAWING No:
DATE: 9-22-11	12 OF 13
DWG: AD11-21	

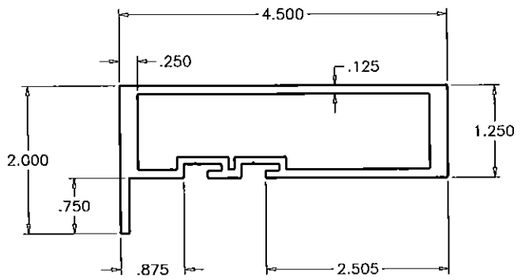

① #3101 – FRAME HEAD/SILL/JAMB

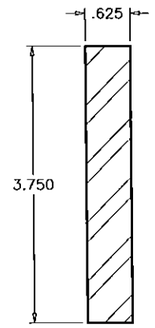

(4A) #3205 STEEL MULLION REINFOR.

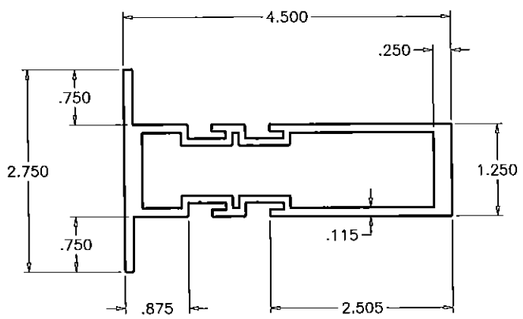

② #3102 – INTERMEDIATE VERTICAL/HORZONTAL

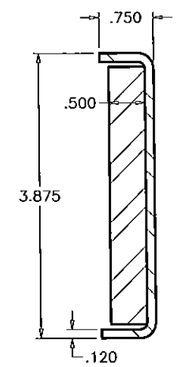

⑪ STEEL REINFOR. OPTION

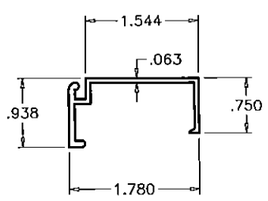

③ #3103 – GLASS STOP

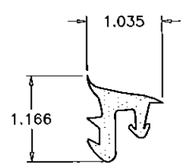

⑥ #H63 – GLAZING GASKET

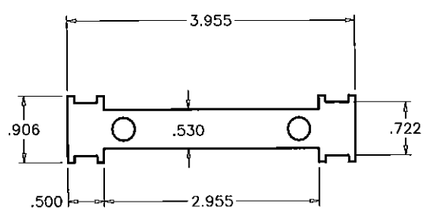

④ #3104 – SHEAR BLOCK / ALUM. MULLION REINFOR.

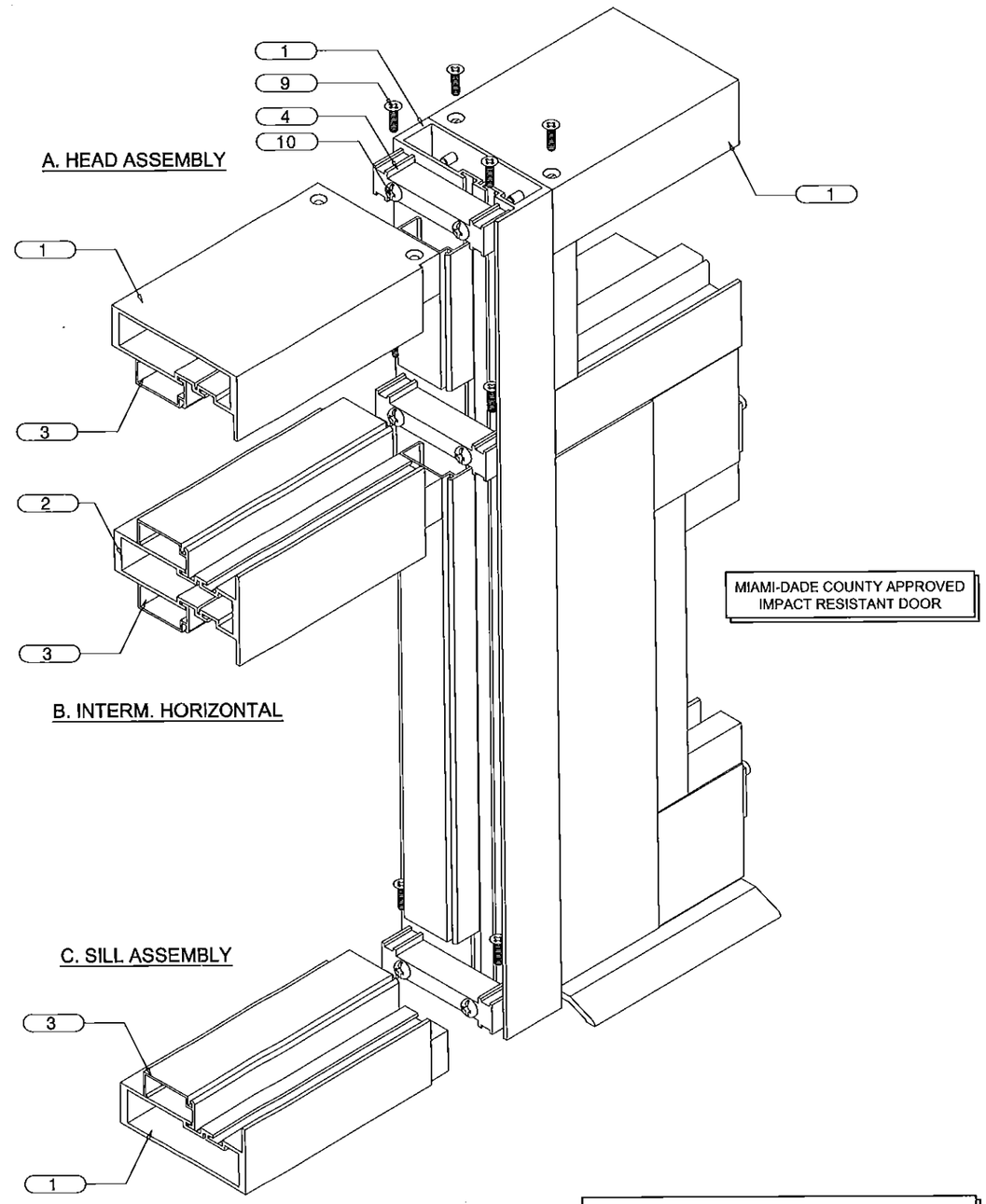

MIAMI-DADE COUNTY APPROVED
IMPACT RESISTANT DOOR

NOTE:
DETAIL ABOVE SHOWS CONNECTION OF HORIZONTAL FRAME MEMBERS TO VERTICAL FRAMES. JAMB AND MULLION CAN BE WITH OR WITHOUT REINFORCEMENT. SEE SHEETS 4 THRU 8 FOR OPTIONS.

GENERAL NOTE:
1. GLASS NOT SHOWN FOR CLARITY.
2. FRAME AND PANEL CORNERS, INSTALLATION SCREWS AND ALL METAL PARTS CONNECTIONS TO BE SEALED WITH CLEAR COLORED SEALANT.

Trulite
GLASS & ALUMINUM SOLUTIONS™
http://www.trulite.com
800 FAIRWAY DRIVE, Suite 200
DEERFIELD BEACH, FL 33441
p. 800-432-8132 | f. 954-724-2083

PRODUCT:

Resistor
3100
STOREFRONT WALL-LMI

Resistor
PRODUCT SERIES

REVN	DATE/REMARKS
REV. 1	1/20/15 UPDATE TO 2014FBC

ENGINEER:
MCY ENGINEERING, INC.
GLAZING CONSULTANT
8501 SW 124TH AVE. STE. 205A
MIAMI, FL 33183
P: 305-271-0117
Email: MCY.Engineering@att.net
www.MCYEngineering.com

STAMP:
YIPING WANG, P.E.
FLORIDA REGISTRATION
P.E. #55983
LICENSE
No. 55983
STATE OF FLORIDA
PROFESSIONAL ENGINEER

PRODUCT CONTROL APPROVAL:
JAN 20 2015

PRODUCT REVISED
as complying with the Florida Building Code
Acceptance No 15-0122.02
Expiration Date March 31, 2020
By Manuel Perez
Miami Dade Product Control

DRAWN: S.L.	DRAWING No:
DATE: 9-22-11	13 OF 13
DWG: AD11-21	