MIAMI-DADE COUNTY
PRODUCT CONTROL SECTION
11805 SW 26 Street, Room 208
Miami, Florida 33175-2474
T (786) 315-2590 F (786) 315-2599
www.miamidade.gov/economy

DEPARTMENT OF REGULATORY AND ECONOMIC RESOURCES (RER)
BOARD AND CODE ADMINISTRATION DIVISION

NOTICE OF ACCEPTANCE (NOA)

James Hardie Building Product, Inc.
10901 Elm Avenue
Fontana, CA 92337

SCOPE:

This NOA is being issued under the applicable rules and regulations governing the use of construction materials. The documentation submitted has been reviewed and accepted by Miami-Dade County RER-Product Control Section to be used in Miami Dade County and other areas where allowed by the Authority Having Jurisdiction (AHJ).

This NOA shall not be valid after the expiration date stated below. The Miami-Dade County Product Control Section (In Miami Dade County) and/or the AHJ (in areas other than Miami Dade County) reserve the right to have this product or material tested for quality assurance purposes. If this product or material fails to perform in the accepted manner, the manufacturer will incur the expense of such testing and the AHJ may immediately revoke, modify, or suspend the use of such product or material within their jurisdiction. RER reserves the right to revoke this acceptance, if it is determined by Miami-Dade County Product Control Section that this product or material fails to meet the requirements of the applicable building code.

This product is approved as described herein, and has been designed to comply with the Florida Building Code, including the High Velocity Hurricane Zone.

DESCRIPTION: "Hardie", "Cem" and "Prevail" Planks and Panels Fiber Cement Siding and Soffit

APPROVAL DOCUMENT: Drawing No. **PNL, PLK & SOFF**, titled "HardiePanel, CemPanel, Prevail Panel; HardiePlank, CemPlank Prevail Lap Siding; HardieSoffit, CemSoffit Panel; Installation Details Wood/Metal Stud Construction", sheets 1 through 12 of 12, dated 04/24/2013, prepared by the manufacturer, signed and sealed by Ronald I. Ogawa, P.E., bearing the Miami-Dade County Product Control revision stamp with the Notice of Acceptance number and expiration date by the Miami-Dade County Product Control Section.

MISSILE IMPACT RATING: Large and Small Missile Impact Resistant

LABELING: A permanent label with the manufacturer's name or logo, Plant City, Florida, and the following statements: "ASTM C 1186 Type A compliant" and "Miami-Dade County Product Control Approved" is to be located on each siding plank or panel and per FBC 1710.9.2 and 1710.9.3 on soffit panels.

RENEWAL of this NOA shall be considered after a renewal application has been filed and there has been no change in the applicable building code negatively affecting the performance of this product.

TERMINATION of this NOA will occur after the expiration date or if there has been a revision or change in the materials, use, and/or manufacture of the product or process. Misuse of this NOA as an endorsement of any product, for sales, advertising or any other purposes shall automatically terminate this NOA. Failure to comply with any section of this NOA shall be cause for termination and removal of NOA.

ADVERTISEMENT: The NOA number preceded by the words Miami-Dade County, Florida, and followed by the expiration date may be displayed in advertising literature. If any portion of the NOA is displayed, then it shall be done in its entirety.

INSPECTION: A copy of this entire NOA shall be provided to the user by the manufacturer or its distributors and shall be available for inspection at the job site at the request of the Building Official.

This NOA **revises NOA # 13-0311.07** and consists of this page 1 and evidence page E-1, as well as approval document mentioned above.

The submitted documentation was reviewed by **Carlos M. Utrera, P.E.**

MIAMI-DADE COUNTY APPROVED

03/30/2015

NOA No. 15-0122.04
Expiration Date: May 1, 2017
Approval Date: April 9, 2015

NOTICE OF ACCEPTANCE: EVIDENCE SUBMITTED

A. DRAWINGS ***"Submitted under NOA # 13-0311.07"***

1. Drawing No. **PNL, PLK & SOFF**, titled "HardiePanel, CemPanel, Prevail Panel; HardiePlank, CemPlank Prevail Lap Siding; HardieSoffit, CemSoffit Panel; Installation Details Wood/Metal Stud Construction", sheets 1 through 12 of 12, dated 04/24/2013, prepared by the manufacturer, signed and sealed by Ronald I. Ogawa, P.E.

B. TESTS ***"Submitted under NOA # 13-0311.07"***

1. Test reports on 1) Uniform Static Air Pressure Test, Loading per FBC TAS 202-94
   2) Cyclic Wind Pressure Loading per FBC, TAS 203-94
   along with marked-up drawings and installation diagram of HardiePlank, HardieSoffit and HardiePanel, prepared by Intertek Testing Services NA LTD, Test Report No. **100733361COQ-004**, dated 08/24/2012, with revision 1 dated 04/25/2013, signed and sealed by Rick Curkeet, P.E.

"Submitted under NOA # 02-0729.02"

	Laboratory Report	Test	Date	Signature
2.	ATI-16423-1	PA 202 & 203	03/18/96	A. N. Reeves P.E.
3.	ATI 16423-2	PA 202 & 203	03/18/96	A. N. Reeves P.E.
4.	ATI 16423-3	PA 202 & 203	03/18/96	A. N. Reeves P.E.

C. CALCULATIONS

1. None.

D. QUALITY ASSURANCE

1. Miami-Dade Department of Regulatory and Economic Resources (RER)

E. MATERIAL CERTIFICATIONS

1. None.

F. STATEMENTS

1. Statement letter of code conformance to the 5th edition (2014) FBC issued by Ronald I. Ogawa & Associates, Inc., dated 10/26/2014, signed and sealed by Ronald I. Ogawa, P.E.

03/30/2015

Carlos M. Utrera, P.E.
Product Control Examiner
NOA No. 15-0122.04
Expiration Date: May 1, 2017
Approval Date: April 9, 2015

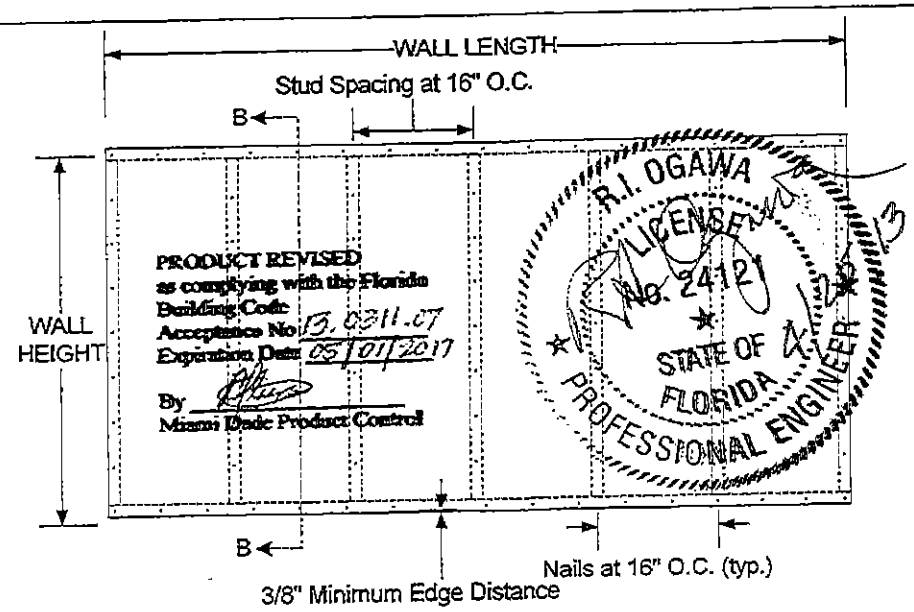

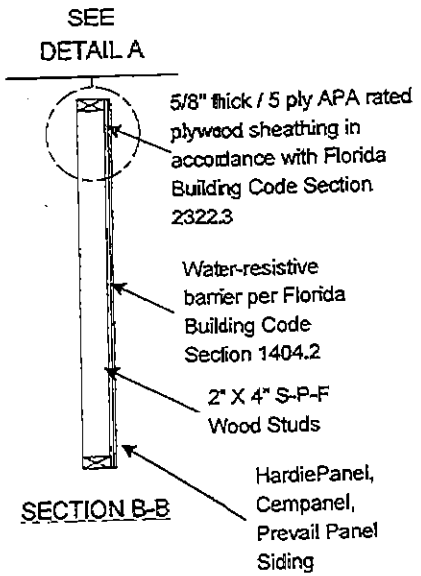

PRODUCT DESCRIPTION

HardiePanel®, Cempanel®, & Prevail® Panel Siding materials are nonasbestos fiber-cement products tested in accordance with ASTM C1186 Grade II, Type A and meeting the requirements of the Florida Building Code.

PANEL DIMENSIONS

Width	Length	Thickness
4'	8,9,10'	5/16"

DESIGN PRESSURE RATING

Installation	Design Pressure
Wood Studs	-76 psf

Impact Resistant – Planks installed over 5/8" thick / 5 ply APA rated plywood sheathing

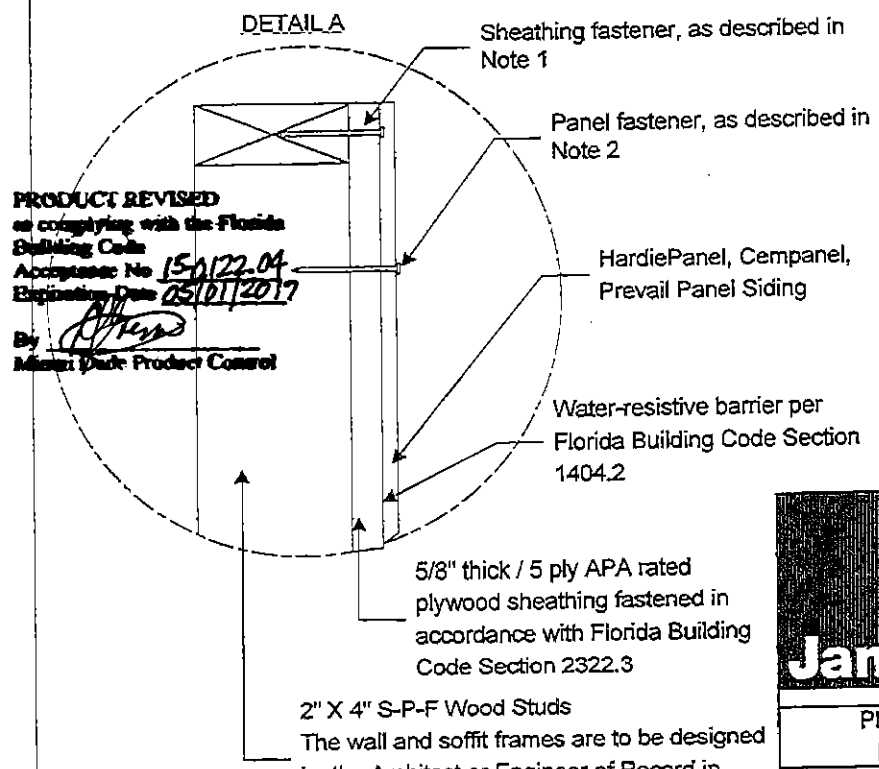

HARDIEPANEL, CEMPANEL, PREVAIL PANEL SIDING INSTALLATION DETAILS

- All installation shall be done in conformance with this Notice of Acceptance, the manufacturer's installation recommendations, and the applicable sections of the Florida Building Code.
- Wood studs where HardiePanel, Cempanel, Prevail Panel Siding will be installed shall be designed by an Engineer or Architect per the Florida Building Code and the requirements of this N.O.A.
- **[Note 1]** 5/8" thick / 5 ply APA rated plywood sheathing shall be attached to the studs in accordance with Florida Building Code Section 2322.3.
- The siding panels shall be installed over 5/8" thick / 5 ply APA rated plywood sheathing supported by a minimum of 2"X4" S-P-F wood studs spaced a maximum of 16" O.C.
- **[Note 2]** The siding panel fastener shall be a 2" long, 0.223" head diameter, 0.092" shank diameter, corrosion resistant siding nail; the fasteners shall be spaced at 6" O.C. at panel edges and intermediate studs; the fasteners shall be driven through the 5/8" thick / 5 ply APA rated plywood sheathing into wood studs located at 16" O.C.
- Fasteners shall have a minimum edge distance of 3/8" and a minimum clearance of 2" from corners.

JamesHardie

HARDIEPANEL, CEMPANEL, PREVAIL PANEL INSTALLATION DETAILS WOOD STUD CONSTRUCTION

James Hardie Building Products, Inc.
10901 Elm Avenue
Fontana, CA 92337

Phone: 909-356-6300
Fax 909-427-0634

Creator: E. Gonzales

SIZE	FSCM NO	DWG NO	REV
A		PNL-PLK-SOFF	1

SCALE	1/2" = 1'-0"	Date: 4/24/2013	SHEET	1 OF 12

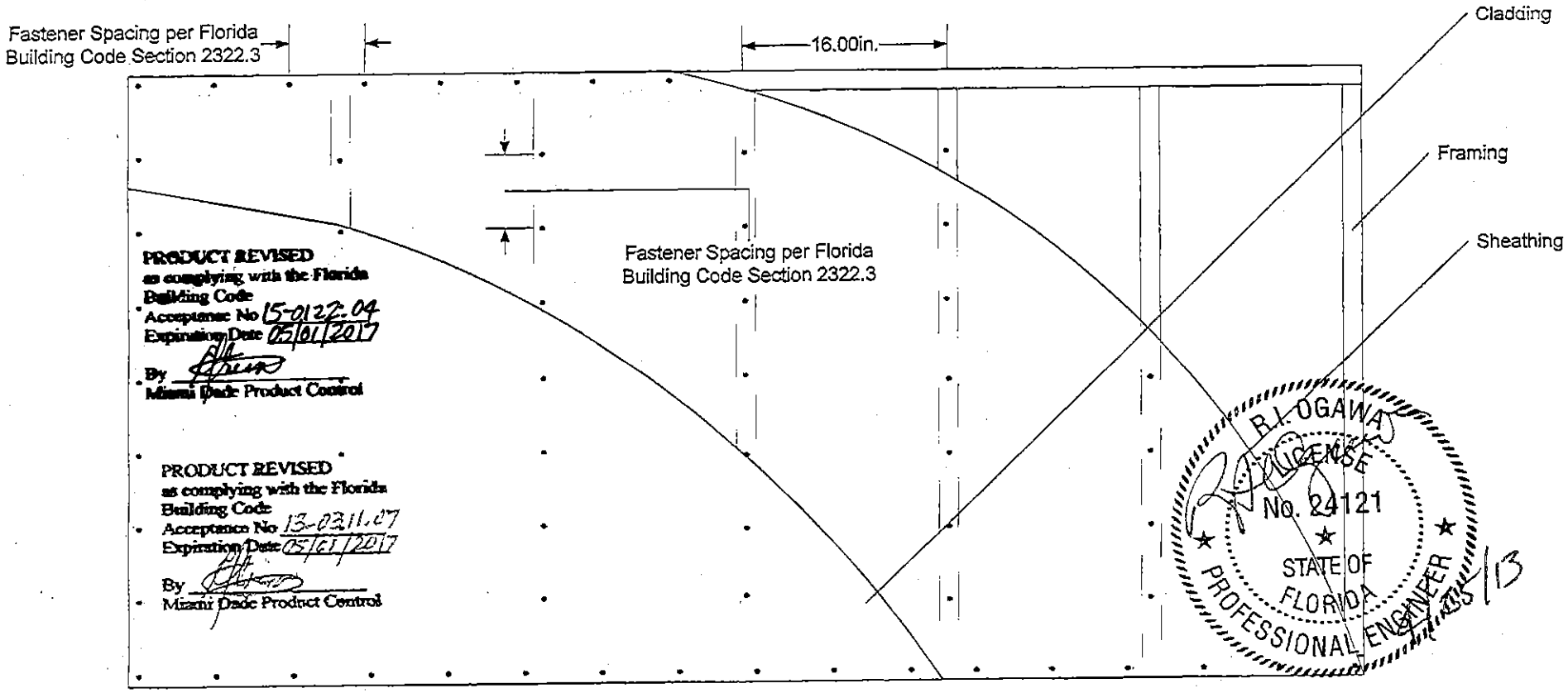

FRAMING

- NOMINAL 2" X 4" S-P-F WOOD STUDS 16" O.C. FASTENED WITH 3-1/2" 16d COMMON NAILS (2 PER TOP AND BOTTOM CONNECTION)
- THE WALL AND SOFFIT FRAMES ARE TO BE DESIGNED BY THE ARCHITECT OR ENGINEER OF RECORD IN COMPLIANCE WITH THE FLORIDA BUILDING CODE

SHEATHING

- NOMINAL 5/8" THICK / 5 PLY APA RATED PLYWOOD SHEATHING FASTENED IN ACCORDANCE WITH FLORIDA BUILDNG CODE SECTION 2322.3

CLADDING

- THE PANEL IS FASTENED WITH 2" LONG, 0.223" HEAD DIAMETER, 0.092" SHANK DIAMETER, CORROSION RESISTANT SIDING NAILS, PLACE NAILS 6" O.C. AT PANEL EDGES AND INTERMEDIATE STUDS

FOR METAL AND WOOD STUDS, PROVISIONS FOR DIAPHRAGM ACTION AND GRAVITY LOAD ARE NOT PART OF THIS APPROVAL (MUST PROVIDE ALTERNATE PROVISIONS FOR THESE LOADS)

JamesHardie

HARDIEPANEL, CEMPANEL, PREVAIL PANEL
INSTALLATION DETAILS WOOD STUD CONSTRUCTION

James Hardie Building Products, Inc.
10901 Elm Avenue
Fontana, CA 92337

Phone: 909-356-6300
Fax 909-427-0634

Creator: E. Gonzales

SIZE	FSCM NO	DWG NO	REV
A		PNL-PLK-SOFF	1

SCALE	1" = 1'-0"	Date: 4/24/2013	SHEET	2 OF 12

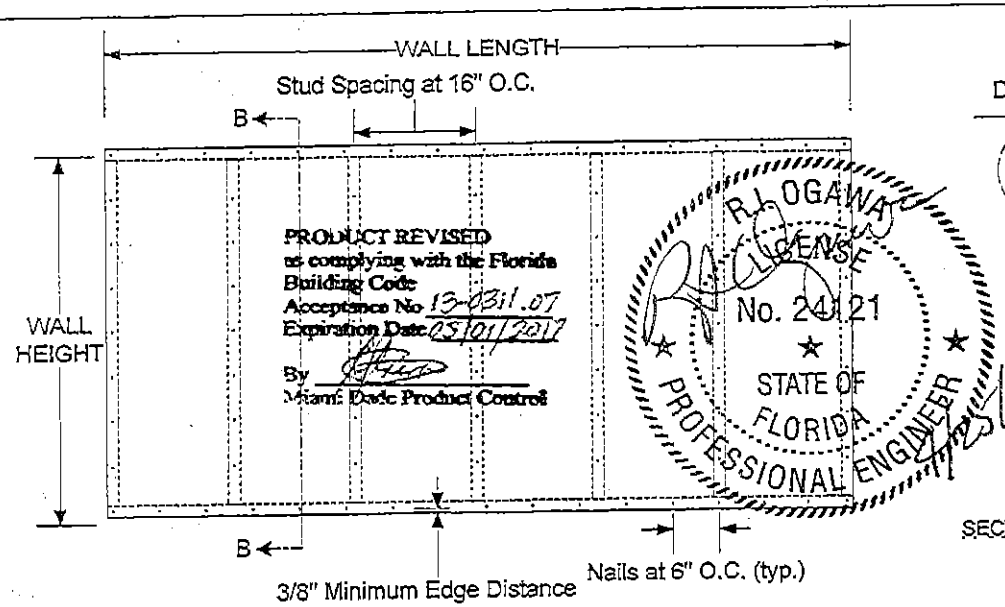

PRODUCT REVISED
as complying with the Florida Building Code
Acceptance No 13-0311.07
Expiration Date 05/01/2017
By
Miami-Dade Product Control

R. J. OGAWA
LICENSE
No. 24121
STATE OF FLORIDA
PROFESSIONAL ENGINEER
4/25/13

SEE DETAIL A

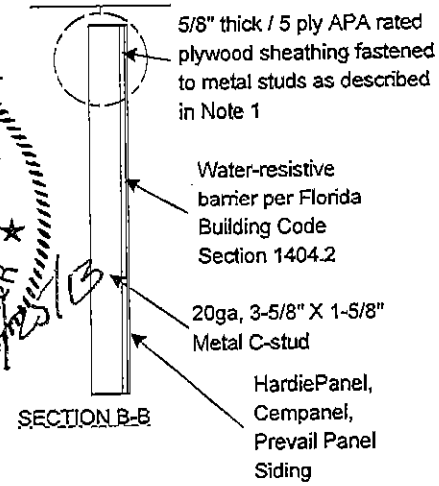

SECTION B-B

PRODUCT DESCRIPTION

HardiePanel®, Cempanel®, & Prevail® Panel Siding materials are nonasbestos fiber-cement products tested in accordance with ASTM C1186 Grade II, Type A and meeting the requirements of the Florida Building Code.

PANEL DIMENSIONS

Width	Length	Thickness
4'	8,9,10'	5/16"

DESIGN PRESSURE RATING

Installation	Design Pressure
Metal Studs	-104 psf

Impact Resistant –
Panel installed over 5/8" thick / 5 ply APA rated plywood sheathing

DETAIL A

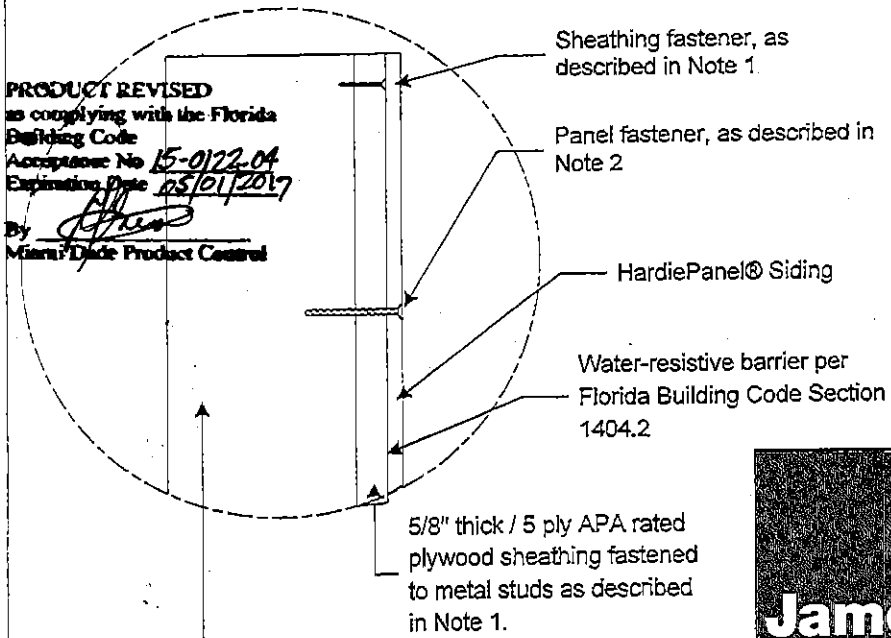

PRODUCT REVISED
as complying with the Florida Building Code
Acceptance No 15-0122.04
Expiration Date 05/01/2017
By
Miami-Dade Product Control

HARDIEPANEL, CEMPANEL, PREVAIL PANEL SIDING INSTALLATION DETAILS

- All installation shall be done in conformance with this Notice of Acceptance, the manufacturer's installation recommendations, and the applicable sections of the Florida Building Code.
- Metal studs where HardiePanel, Cempanel, Prevail Panel Siding will be installed shall be designed by an Engineer or Architect per the Florida Building Code and the requirements of this N.O.A.
- **[Note 1]** 5/8" thick / 5 ply APA rated plywood sheathing shall be attached to metal studs at 6"oc at panel edges and all intermediate supports using a No.8-18, 0.315" head diameter x 1-1/4" long bugle head screw
- The siding panels shall be installed over 5/8" thick / 5 ply APA rated plywood sheathing supported by a minimum 20ga, Nominal 3-5/8" X 1-5/8" Metal C-studs spaced a maximum of 16" O.C.
- **[Note 2]** The siding panel fastener shall be a minimum No. 8-18, 0.315" head diameter X 1-5/8" long* ribbed bugle head screw (*or screw shall have at least 3 full threads penetrating metal framing); the fasteners shall be spaced at 6" O.C. at panel edges and intermediate studs; the fasteners shall be driven through the 5/8" thick / 5 ply APA rated plywood sheathing into metal studs located at 16" O.C.
- Fasteners shall have a minimum edge distance of 3/8" and a minimum clearance of 2" from corners.

JamesHardie

HARDIEPANEL, CEMPANEL, PREVAIL PANEL
INSTALLATION DETAILS METAL STUD CONSTRUCTION

James Hardie Building Products, Inc.
10901 Elm Avenue
Fontana, CA 92337

Phone: 909-356-6300
Fax 909-427-0634

SIZE	FSCM NO	DWG NO	REV
A		PNL-PLK-SOFF	1

Creator: E. Gonzales | SCALE 1/2" = 1'-0" | Date: 4/24/2013 | SHEET 3 OF 12

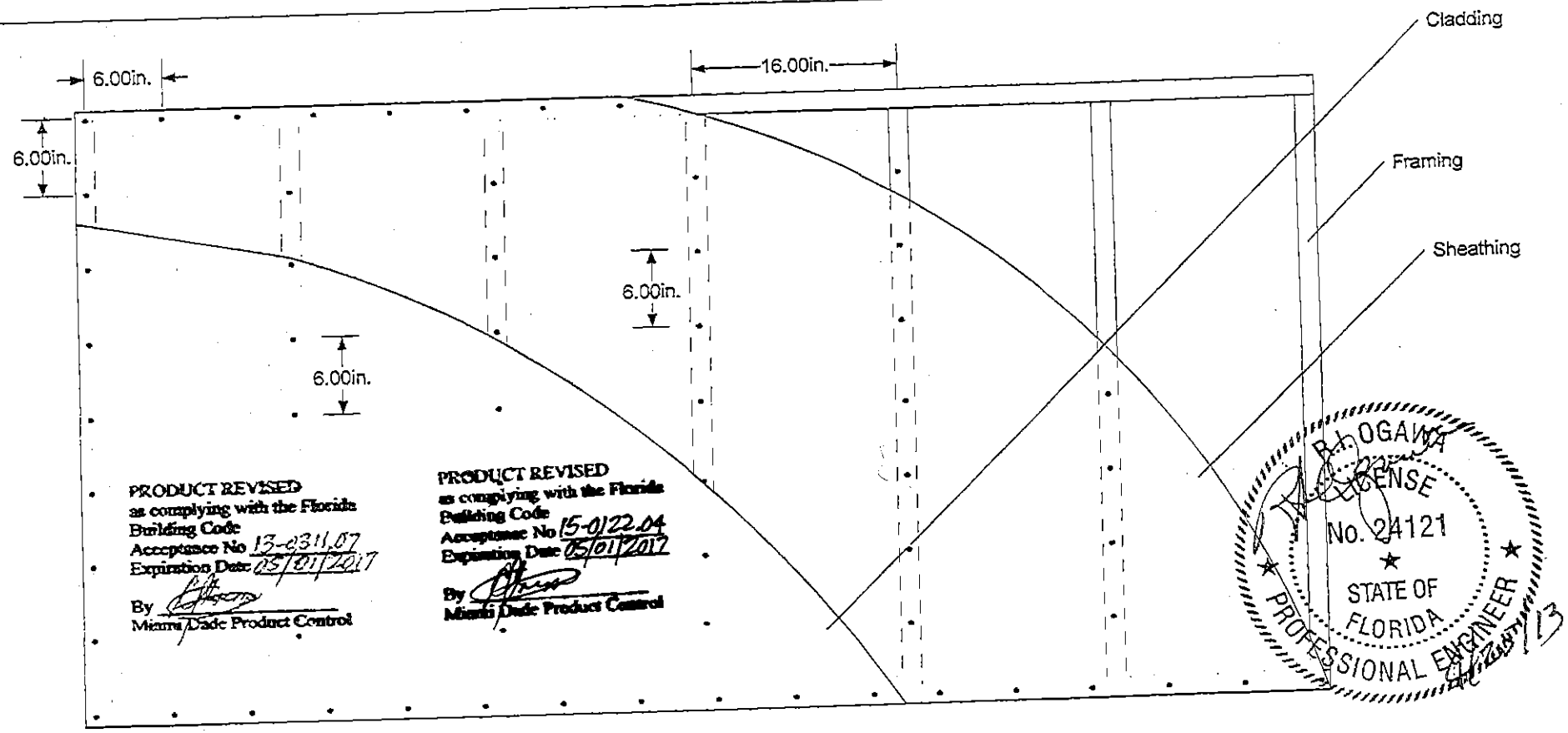

FRAMING

- NOMINAL 20 GAUGE 3-5/8" X 1-5/8" STEEL STUDS 16" O.C. FASTENED WITH 5/8" WAFER HEAD SCREWS (2 PER TOP AND BOTTOM CONNECTION)
- THE WALL AND SOFFIT FRAMES ARE TO BE DESIGNED BY THE ARCHITECT OR ENGINEER OF RECORD IN COMPLIANCE WITH THE FLORIDA BUILDING CODE

SHEATHING

- NOMINAL 5/8" THICK / 5 PLY APA RATED PLYWOOD SHEATHING TO METAL STUDS AT 6" OC AT PANEL EDGES AND ALL INTERMEDIATE SUPPORTS USING A NO.8-18, 0.315" HEAD DIAMETER X 1-1/4" LONG BUGLE HEAD SCREW

CLADDING

- THE PANEL IS FASTENED WITH NO. 8-18, 0.315" HEAD DIAMETER X 1-5/8 " LONG CORROSION RESISTANT RIBBED BUGLE HEAD SCREWS (SCREW SHALL HAVE AT LEAST 3 FULL THREADS PENETRATING THE METAL FRAMING), PLACE SCREWS 6" O.C. AT PANEL EDGES AND INTERMEDIATE STUDS

FOR METAL AND WOOD STUDS, PROVISIONS FOR DIAPHRAGM ACTION AND GRAVITY LOAD ARE NOT PART OF THIS APPROVAL (MUST PROVIDE ALTERNATE PROVISIONS FOR THESE LOADS)

JamesHardie	HARDIEPANEL, CEMPANEL, PREVAIL PANEL INSTALLATION DETAILS METAL STUD CONSTRUCTION			
	James Hardie Building Products, Inc. 10901 Elm Avenue Fontana, CA 92337			
Phone: 909-356-6300 Fax 909-427-0634	SIZE A	FSCM NO	DWG NO PNL-PLK-SOFF	REV 1
Creator: E. Gonzales	SCALE 1" = 1'-0"		Date: 4/24/2013	SHEET 4 OF 12

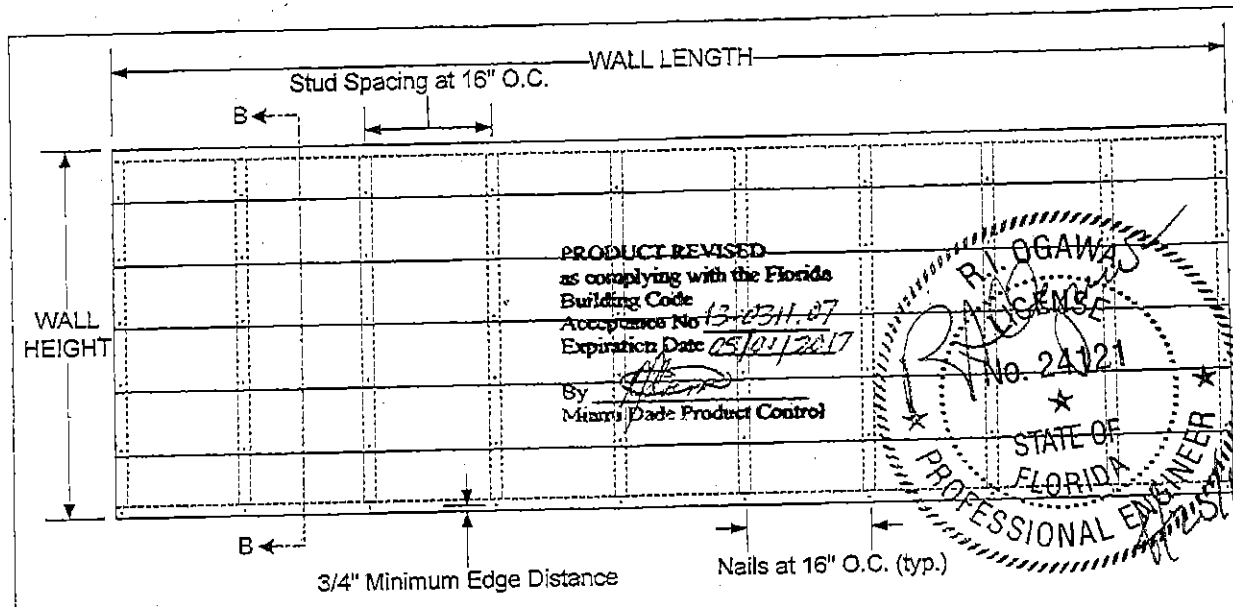

PRODUCT REVISED
as complying with the Florida Building Code
Acceptance No 13-0311.07
Expiration Date 05/01/2017
By
Miami-Dade Product Control

R. I. OGAWA
LICENSE
No. 24121
STATE OF FLORIDA
PROFESSIONAL ENGINEER
4/25/13

SEE DETAIL A

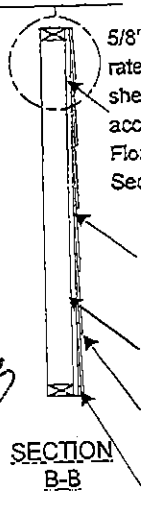

SECTION B-B

PRODUCT DESCRIPTION

HardiePlank®, Cemplank®, & Prevail® Plank Lap Siding materials are nonasbestos fiber-cement products tested in accordance with ASTM C1186 Grade II, Type A and meeting the requirements of the Florida Building Code.

PANEL DIMENSIONS

Width	Length	Thickness
≤9-1/2"	12'	5/16"

DESIGN PRESSURE RATING

Installation	Design Pressure
Wood Studs	-92 psf

Impact Resistant – Planks installed over 5/8" thick / 5 ply APA rated plywood sheathing

DETAIL A

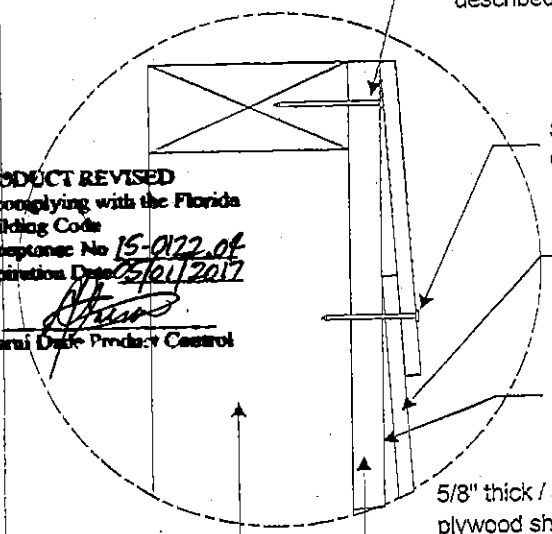

PRODUCT REVISED
as complying with the Florida Building Code
Acceptance No 15-0122.04
Expiration Date 05/01/2017
By
Miami-Dade Product Control

HARDIEPLANK, CEMPLANK, PREVAIL LAP SIDING INSTALLATION DETAILS

- All installation shall be done in conformance with this Notice of Acceptance, the manufacturer's installation recommendations, and the applicable sections of the Florida Building Code.
- Wood studs where HardiePlank, Cemplank, Prevail Lap Siding will be installed shall be designed by an Engineer or Architect per the Florida Building Code and the requirements of this N.O.A.
- **[Note 1]** 5/8" thick / 5 ply APA rated plywood sheathing shall be attached to the studs in accordance with Florida Building Code Section 2322.3.
- Planks shall be applied horizontally commencing from the bottom course of the wall with 1-1/4" wide laps at the top of the plank such that the exposure area of each plank is ≤ 8-1/4" vertically.
- **[Note 2]** The siding fastener shall be a 2-1/2" long, 0.223" head diameter, 0.092" shank diameter, corrosion-resistant siding nail; The siding is fastened ≤ 8-1/4" O.C. vertically and 16" O.C. horizontally; fasteners are driven into wood studs through 5/8" thick / 5 ply APA rated plywood sheathing, fasteners are placed in the overlapping area approximately 3/4" from the bottom edge of the overlapping plank.
- Vertical joints shall be placed over studs.
- The planks shall be installed over 5/8" thick / 5 ply APA rated plywood sheathing supported by a minimum of 2"X4" S-P-F wood studs spaced a maximum of 16" O.C.
- Fasteners shall have a minimum edge distance of 3/8".

JamesHardie

HARDIEPLANK, CEMPLANK, PREVAIL LAP SIDING
INSTALLATION DETAILS WOOD STUD CONSTRUCTION

James Hardie Building Products, Inc.
10901 Elm Avenue
Fontana, CA 92337

Phone: 909-356-6300
Fax 909-427-0634

Creator: E. Gonzales

SIZE	FSCM NO	DWG NO	REV
A		PNL-PLK-SOFF	1

SCALE	1/2" = 1'-0"	Date: 4/24/2013	SHEET	5 OF 12

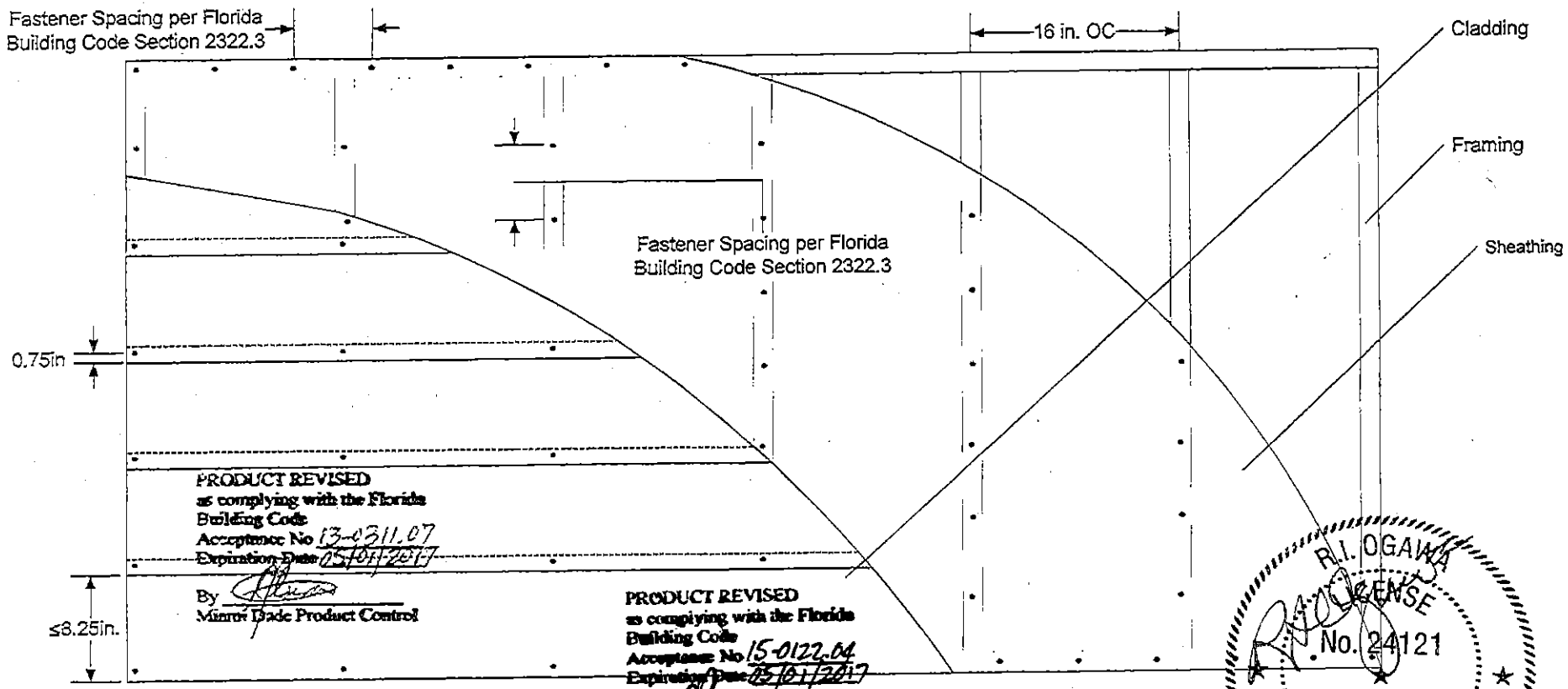

R.I. OGAWA
LICENSE
No. 24121
STATE OF
FLORIDA
PROFESSIONAL ENGINEER
4/25/13

FRAMING

- NOMINAL 2" X 4" S-P-F WOOD STUDS 16" O.C. FASTENED WITH 3-1/2" 16d COMMON NAILS (2 PER TOP AND BOTTOM CONNECTION)
- THE WALL AND SOFFIT FRAMES ARE TO BE DESIGNED BY THE ARCHITECT OR ENGINEER OF RECORD IN COMPLIANCE WITH THE FLORIDA BUILDING CODE

SHEATHING

- NOMINAL 5/8" THICK / 5 PLY APA RATED PLYWOOD SHEATHING FASTENED IN ACCORDANCE WITH FLORIDA BUILDING CODE SECTION 2322.3

CLADDING

- PLANKS OVERLAP 1-1/4"
- THE EXPOSURE IS ≤8-1/4"
- THE PLANKS ARE FACE NAILED WITH 2-1/2" LONG, 0.223" HEAD DIAMETER, 0.092" SHANK DIAMETER, CORROSION-RESISTANT SIDING NAILS, PLACED 3/4" UP FROM THE BOTTOM EDGE OF THE PLANK AT EACH STUD LOCATION

FOR METAL AND WOOD STUDS, PROVISIONS FOR DIAPHRAGM ACTION AND GRAVITY LOAD ARE NOT PART OF THIS APPROVAL (MUST PROVIDE ALTERNATE PROVISIONS FOR THESE LOADS)

JamesHardie	HARDIEPLANK, CEMPLANK, PREVAIL LAP SIDING INSTALLATION DETAILS WOOD STUD CONSTRUCTION			
	James Hardie Building Products, Inc. 10901 Elm Avenue Fontana, CA 92337			
Phone: 909-356-6300 Fax 909-427-0634	SIZE A	FSCM NO	DWG NO PNL-PLK-SOFF	REV 1
Creator: E. Gonzales	SCALE 1" = 1'-0"	Date: 4/24/2013	SHEET 6 OF 12	

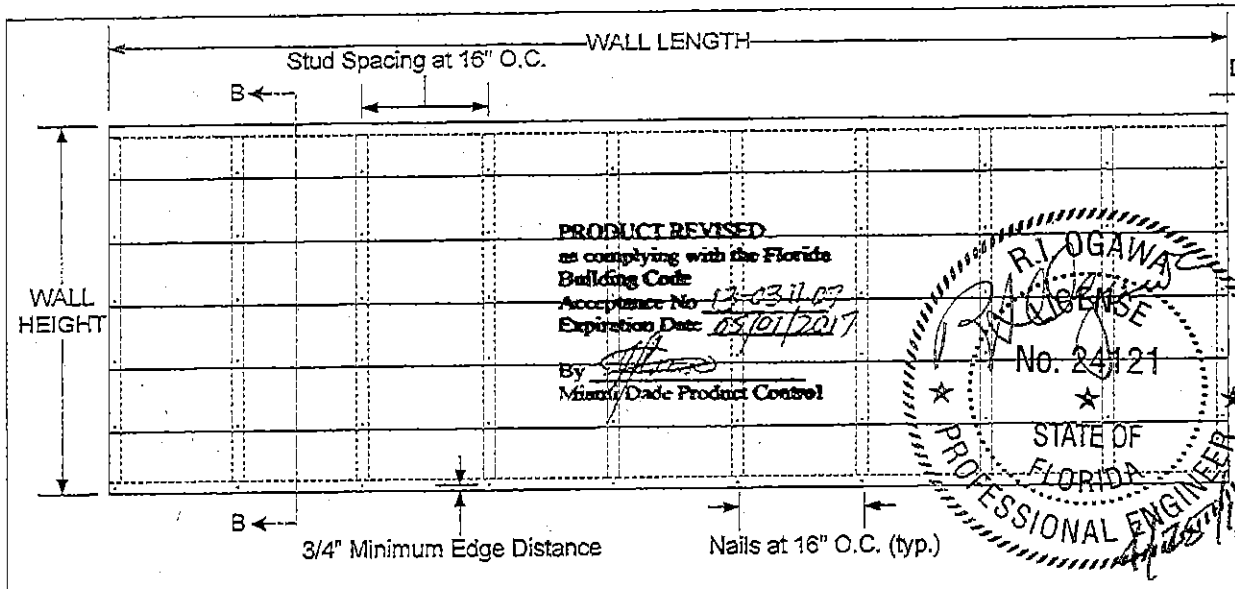

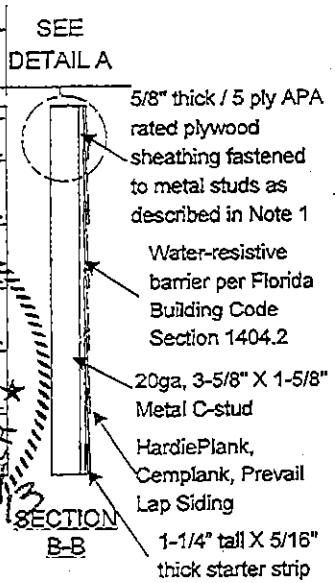

PRODUCT DESCRIPTION

HardiePlank®, Cemplank®, and Prevail® Plank Lap Siding materials are nonasbestos fiber-cement products tested in accordance with ASTM C1186 Grade II, Type A and meeting the requirements of the Florida Building Code.

PLANK DIMENSIONS

Width	Length	Thickness
≤ 9-1/2"	12'	5/16"

DESIGN PRESSURE RATING

Installation	Design Pressure
Metal Studs	-92 psf

Impact Resistant --
Planks installed over 5/8" thick / 5 ply APA rated plywood sheathing

DETAIL A

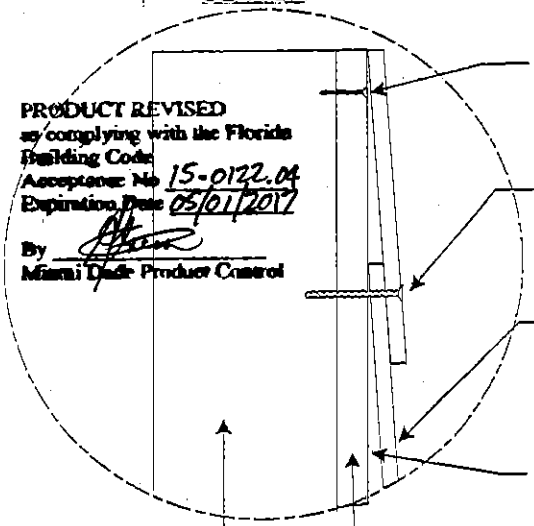

20ga, 3-5/8" X 1-5/8" Metal C-stud
The wall and soffit frames are to be designed by the Architect or Engineer of Record in compliance with the Florida Building Code.

HARDIEPLANK, CEMPLANK, PREVAIL LAP SIDING INSTALLATION DETAILS

- All installation shall be done in conformance with this Notice of Acceptance, the manufacturer's installation recommendations, and the applicable sections of the Florida Building Code.
- Metal studs where HardiePlank, Cemplank, Prevail Lap Siding will be installed shall be designed by an Engineer or Architect per the Florida Building Code and the requirements of this N.O.A.
- **[Note 1]** 5/8" thick / 5 ply APA rated plywood sheathing shall be attached to metal studs at 6"oc at panel edges and all intermediate supports using a No.8-18, 0.315" head diameter x 1-1/4" long bugle head screw
- Planks shall be applied horizontally commencing from the bottom course of the wall with 1-1/4" wide laps at the top of the plank such that the exposure area of each plank is ≤ 8-1/4" vertically.
- **[Note 2]** The siding fastener shall be a minimum No. 8-18, 0.315" head diameter X 2-1/4" long* bugle head screw over metal studs (*or screw shall have at least 3 full threads penetrating metal framing); The siding is fastened ≤ 8-1/4" O.C. vertically and 16" O.C. horizontally; fasteners are driven into metal studs through 5/8" thick / 5 ply APA rated plywood sheathing, fasteners are placed in the overlapping area approximately 3/4" from the bottom edge of the overlapping plank.
- Vertical joints shall be placed over studs.
- The planks shall be installed over 5/8" thick / 5 ply APA rated plywood sheathing supported by a minimum 20ga, Nominal 3-5/8" X 1-5/8" Metal C-studs spaced a maximum of 16" O.C.
- Fasteners shall have a minimum edge distance of 3/8".

JamesHardie

HARDIEPLANK, CEMPLANK, PREVAIL LAP SIDING
INSTALLATION DETAILS METAL STUD CONSTRUCTION

James Hardie Building Products, Inc.
10901 Elm Avenue
Fontana, CA 92337

Phone: 909-356-6300
Fax 909-427-0634

Creator: E. Gonzales

SIZE	FSCM NO	DWG NO	REV
A		PNL-PLK-SOFF	1
SCALE 1/2" = 1'-0"		Date: 4/24/2013	SHEET 7 OF 12

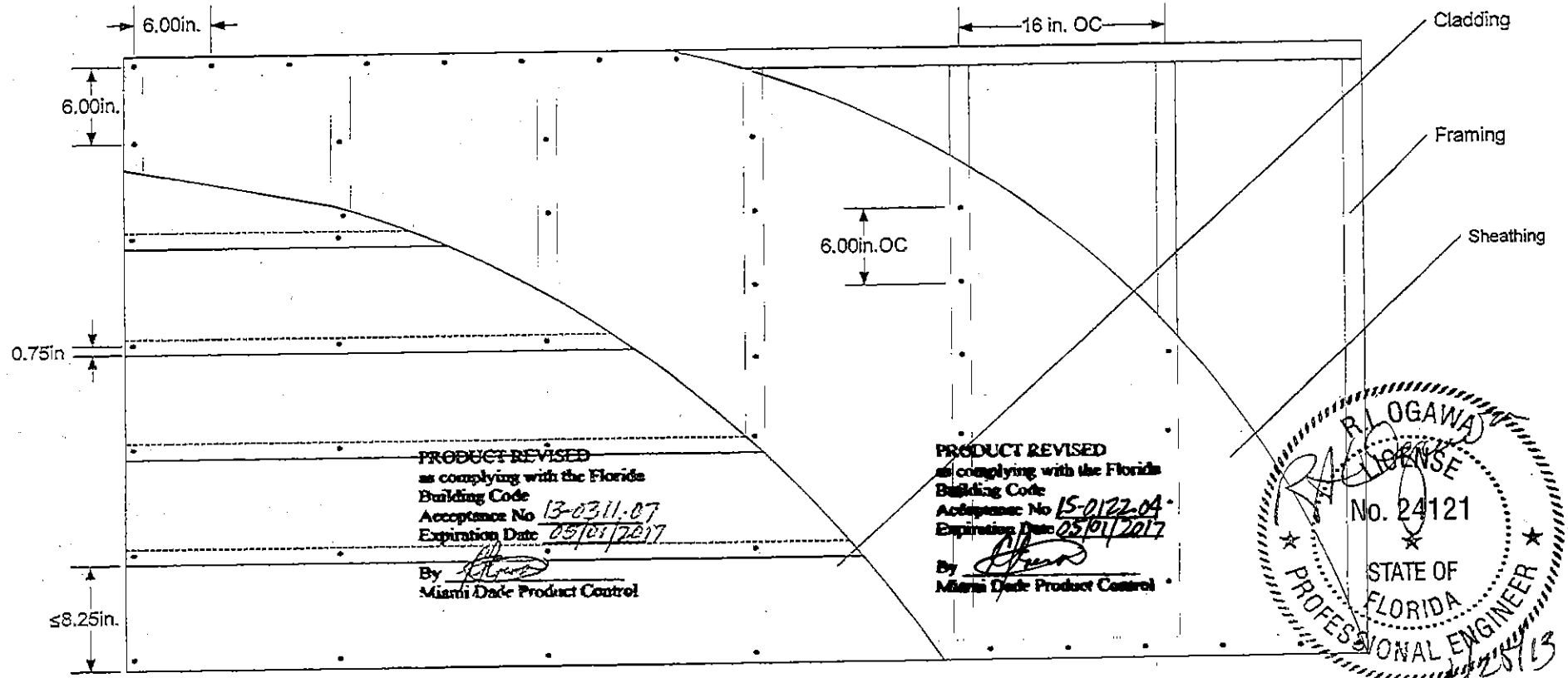

FRAMING

- NOMINAL 20 GAUGE 3-5/8" X 1-5/8" STEEL STUDS 16" O.C. FASTENED WITH 5/8" LONG RIBBED BUGLE HEAD SCREWS (2 PER TOP AND BOTTOM CONNECTION)
- THE WALL AND SOFFIT FRAMES ARE TO BE DESIGNED BY THE ARCHITECT OR ENGINEER OF RECORD IN COMPLIANCE WITH THE FLORIDA BUILDING CODE

SHEATHING

- NOMINAL 5/8" THICK / 5 PLY APA RATED PLYWOOD SHEATHING TO METAL STUDS AT 6" OC AT PANEL EDGES AND ALL INTERMEDIATE SUPPORTS USING A NO.8-18, 0.315" HEAD DIAMETER X 1-1/4" LONG BUGLE HEAD SCREW

CLADDING

- PLANKS OVERLAP 1-1/4"
- THE EXPOSURE IS ≤ 8-1/4"
- THE PLANKS ARE FASTENED WITH NO. 8-18, 0.315" HEAD DIAMETER X 2-1/4" LONG CORROSION-RESISTANT RIBBED BUGLE HEAD SCREWS (SCREW SHALL HAVE AT LEAST 3 FULL THREADS PENETRATING THE METAL FRAMING), PLACED 3/4" UP FROM THE BOTTOM EDGE OF THE PLANK AT EACH STUD LOCATION

FOR METAL AND WOOD STUDS, PROVISIONS FOR DIAPHRAGM ACTION AND GRAVITY LOAD ARE NOT PART OF THIS APPROVAL (MUST PROVIDE ALTERNATE PROVISIONS FOR THESE LOADS)

JamesHardie

HARDIEPLANK, CEMPLANK, PREVAIL LAP SIDING
INSTALLATION DETAILS METAL STUD CONSTRUCTION

James Hardie Building Products, Inc.
10901 Elm Avenue
Fontana, CA 92337

Phone: 909-356-6300
Fax 909-427-0634

Creator: E. Gonzales

SIZE	FSCM NO	DWG NO	REV
A		PNL-PLK-SOFF	1

SCALE	1" = 1'-0"	Date: 4/24/2013	SHEET	8 OF 12

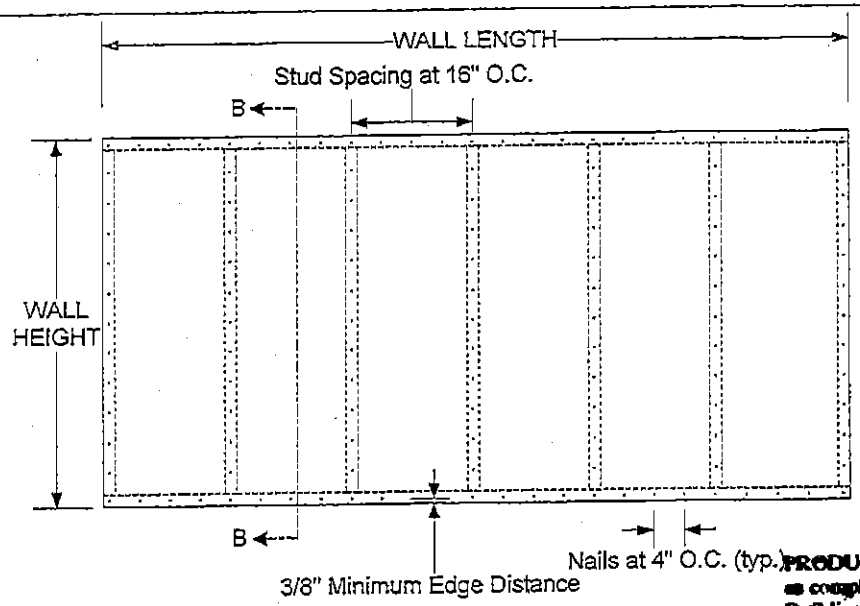

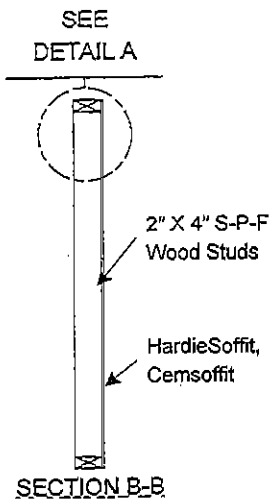

PRODUCT DESCRIPTION

HardieSoffit® & Cemsoffit® materials are nonasbestos fiber-cement products tested in accordance with ASTM C1186 Grade II, Type A and meeting the requirements of the Florida Building Code.

SOFFIT DIMENSIONS

Width	Length	Thickness
4'	8'	1/4"

DESIGN PRESSURE RATING

Installation	Design Pressure
Wood Studs	-70 psf

PRODUCT REVISED
as complying with the Florida Building Code
Acceptance No 15-0122.04
Expiration Date 05/01/2017
By
Miami-Dade Product Control

PRODUCT REVISED
as complying with the Florida Building Code
Acceptance No 13-0311.07
Expiration Date 05/01/2017
By
Miami-Dade Product Control

R.I. OGAWA
LICENSE
No. 24121
STATE OF FLORIDA
PROFESSIONAL ENGINEER
4/25/13

DETAIL A

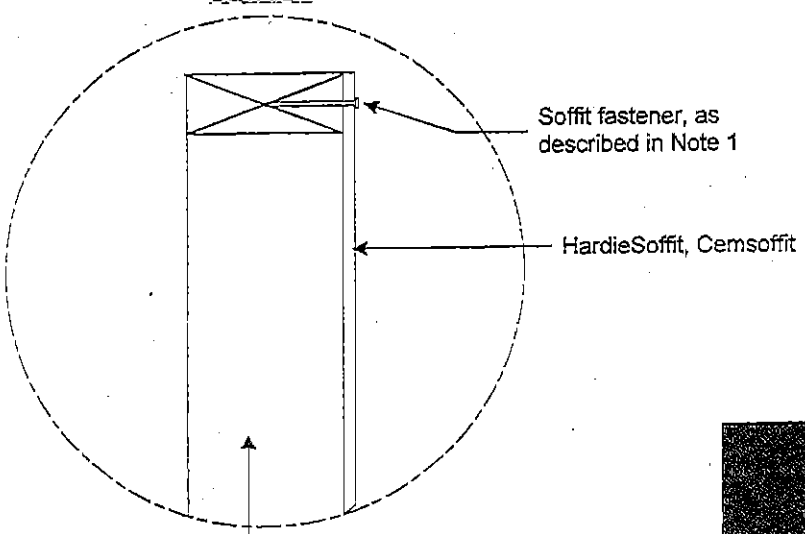

Minimum 2" X 4" S-P-F Wood Studs The wall and soffit frames are to be designed by the Architect or Engineer of Record in compliance with the Florida Building Code.

HARDIESOFFIT, CEMSOFFIT PANEL INSTALLATION DETAILS

- All installation shall be done in conformance with this Notice of Acceptance, the manufacturer's installation recommendations, and the applicable sections of the Florida Building Code.
- Wood studs where HardieSoffit, Cemsoffit will be installed shall be designed by an Engineer or Architect per the Florida Building Code and the requirements of this N.O.A.
- The soffit shall be installed over minimum 2"X4" S-P-F wood studs spaced a maximum of 16" O.C.
- **[Note 1]** The soffit fastener shall be a 2" long, 0.223" head diameter, 0.092" shank diameter, corrosion resistant siding nail; the fasteners shall be spaced at 4" O.C. at panel edges and intermediate studs; the fasteners shall be driven into wood studs located at 16" O.C.
- Fasteners shall have a minimum edge distance of 3/8" and a minimum clearance of 2" from corners.

JamesHardie

HARDIESOFFIT, CEMSOFFIT PANEL
INSTALLATION DETAILS WOOD STUD CONSTRUCTION

James Hardie Building Products, Inc.
10901 Elm Avenue
Fontana, CA 92337

Phone: 909-356-6300
Fax 909-427-0634

SIZE	FSCM NO	DWG NO	REV
A		PNL-PLK-SOFF	1

Creator: E. Gonzales | SCALE 1/2" = 1'-0" | Date: 4/24/2013 | SHEET 9 OF 12

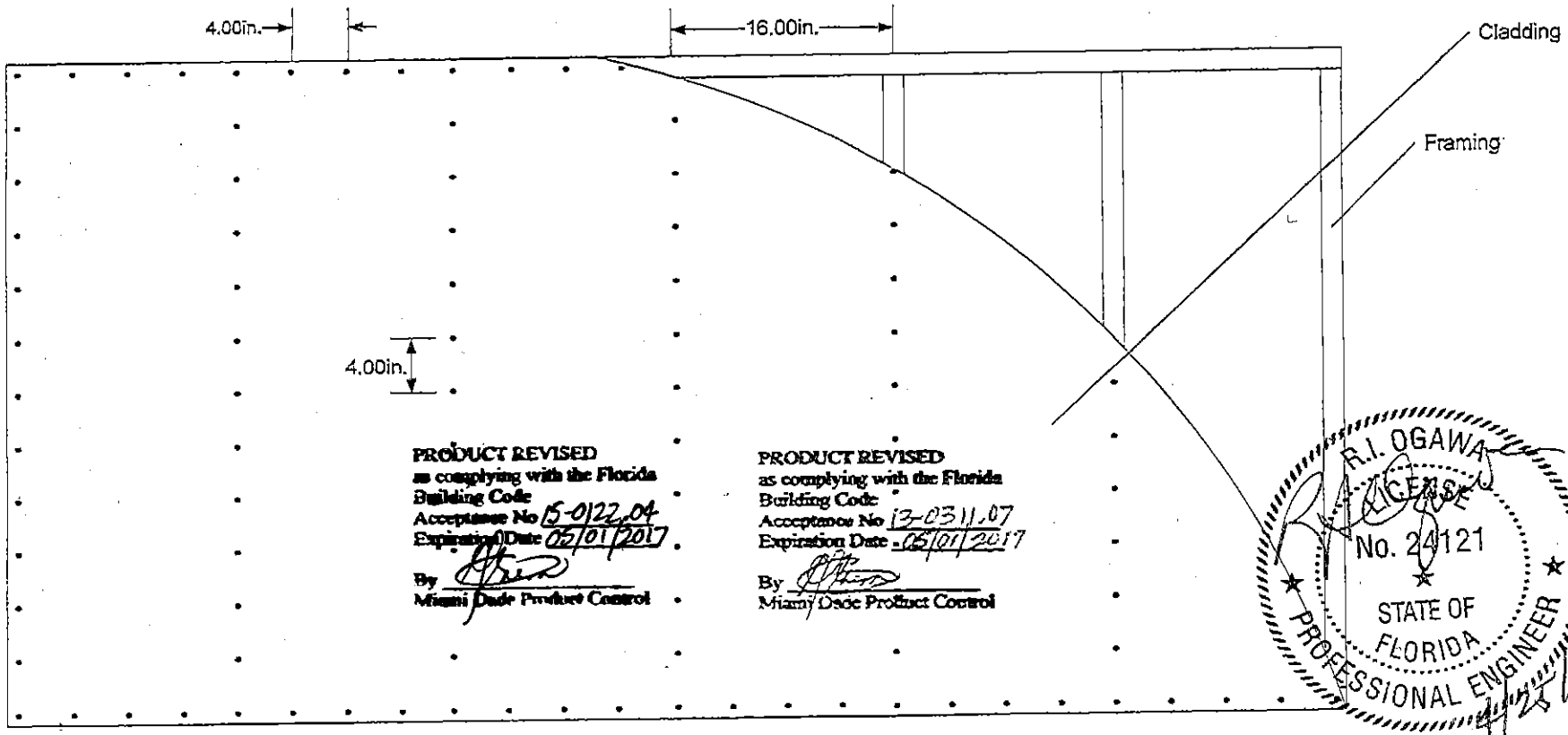

FRAMING
NOMINAL 2" X 4" S-P-F WOOD STUDS 16" O.C. FASTENED WITH 3-1/2" 16d COMMON NAILS (2 PER TOP AND BOTTOM CONNECTION)
THE WALL AND SOFFIT FRAMES ARE TO BE DESIGNED BY THE ARCHITECT OR ENGINEER OF RECORD IN COMPLIANCE WITH THE FLORIDA BUILDING CODE

CLADDING
THE SOFFIT IS FASTENED WITH 2" LONG, 0.223" HEAD DIAMETER, 0.092" SHANK DIAMETER, CORROSION RESISTANT SIDING NAILS, PLACE NAILS 4" O.C. AT PANEL EDGES AND INTERMEDIATE STUDS

FOR METAL AND WOOD STUDS, PROVISIONS FOR DIAPHRAGM ACTION AND GRAVITY LOAD ARE NOT PART OF THIS APPROVAL (MUST PROVIDE ALTERNATE PROVISIONS FOR THESE LOADS)

JamesHardie

HARDIESOFFIT, CEMSOFFIT PANEL
INSTALLATION DETAILS WOOD STUD CONSTRUCTION

James Hardie Building Products, Inc.
10901 Elm Avenue
Fontana, CA 92337

Phone: 909-356-6300
Fax 909-427-0634

Creator: E. Gonzales

SIZE	FSCM NO	DWG NO	REV
A		PNL-PLK-SOFF	1

SCALE	1" = 1'-0"	Date: 4/24/2013	SHEET	10 OF 12

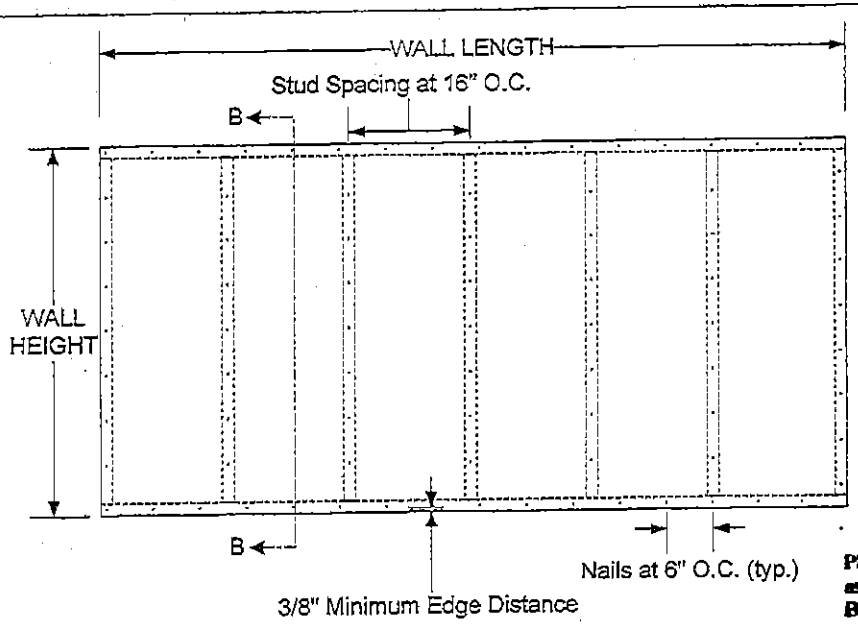

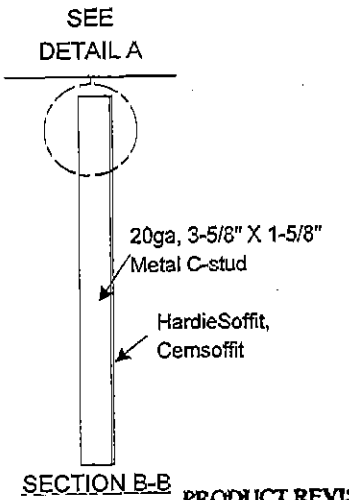

PRODUCT DESCRIPTION

HardieSoffit® & Cemsoffit® materials are nonasbestos fiber-cement products tested in accordance with ASTM C1186 Grade II, Type A and meeting the requirements of the Florida Building Code.

SOFFIT DIMENSIONS

Width	Length	Thickness
4'	8'	¼"

DESIGN PRESSURE RATING

Installation	Design Pressure
Metal Studs	-55 psf

PRODUCT REVISED
as complying with the Florida Building Code
Acceptance No 15-0122.04
Expiration Date 05/01/2017
By
Miami Dade Product Control

PRODUCT REVISED
as complying with the Florida Building Code
Acceptance No 13-0311.07
Expiration Date 05/01/2017
By
Miami Dade Product Control

R. J. OGAWA
LICENSE
No. 24121
STATE OF FLORIDA
PROFESSIONAL ENGINEER

DETAIL A

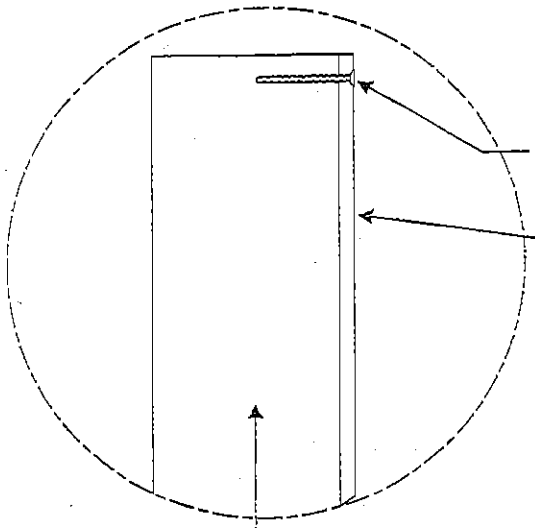

20ga, 3-5/8" X 1-5/8" Metal C-stud
The wall and soffit frames are to be designed by the Architect or Engineer of Record in compliance with the Florida Building Code.

HARDIESOFFIT, CEMSOFFIT PANEL INSTALLATION DETAILS

- All installation shall be done in conformance with this Notice of Acceptance, the manufacturer's installation recommendations, and the applicable sections of the Florida Building Code.
- Metal studs where HardieSoffit, Cemsoffit will be installed shall be designed by an Engineer or Architect per the Florida Building Code and the requirements of this N.O.A.
- The soffit shall be installed over minimum 20ga, Nominal 3-5/8" X 1-5/8" Metal C-studs spaced a maximum of 16" O.C.
- [Note 1] The soffit fastener shall be a minimum No. 8-18, 0.315" head diameter X 1-1/4" long* ribbed bugle head screw (*or screw shall have at least 3 full threads penetrating metal framing);the fasteners shall be spaced at 6" O.C. at panel edges and intermediate studs; the fasteners shall be driven into metal studs located at 16" O.C.
- Fasteners shall have a minimum edge distance of 3/8" and a minimum clearance of 2" from corners.

JamesHardie

HARDIESOFFIT, CEMSOFFIT PANEL
INSTALLATION DETAILS METAL STUD CONSTRUCTION

James Hardie Building Products, Inc.
10901 Elm Avenue
Fontana, CA 92337

Phone: 909-356-6300
Fax 909-427-0634

SIZE	FSCM NO	DWG NO	REV
A		PNL-PLK-SOFF	1

Creator: E. Gonzales | SCALE 1/2" = 1'-0" | Date: 4/24/2013 | SHEET 11 OF 12

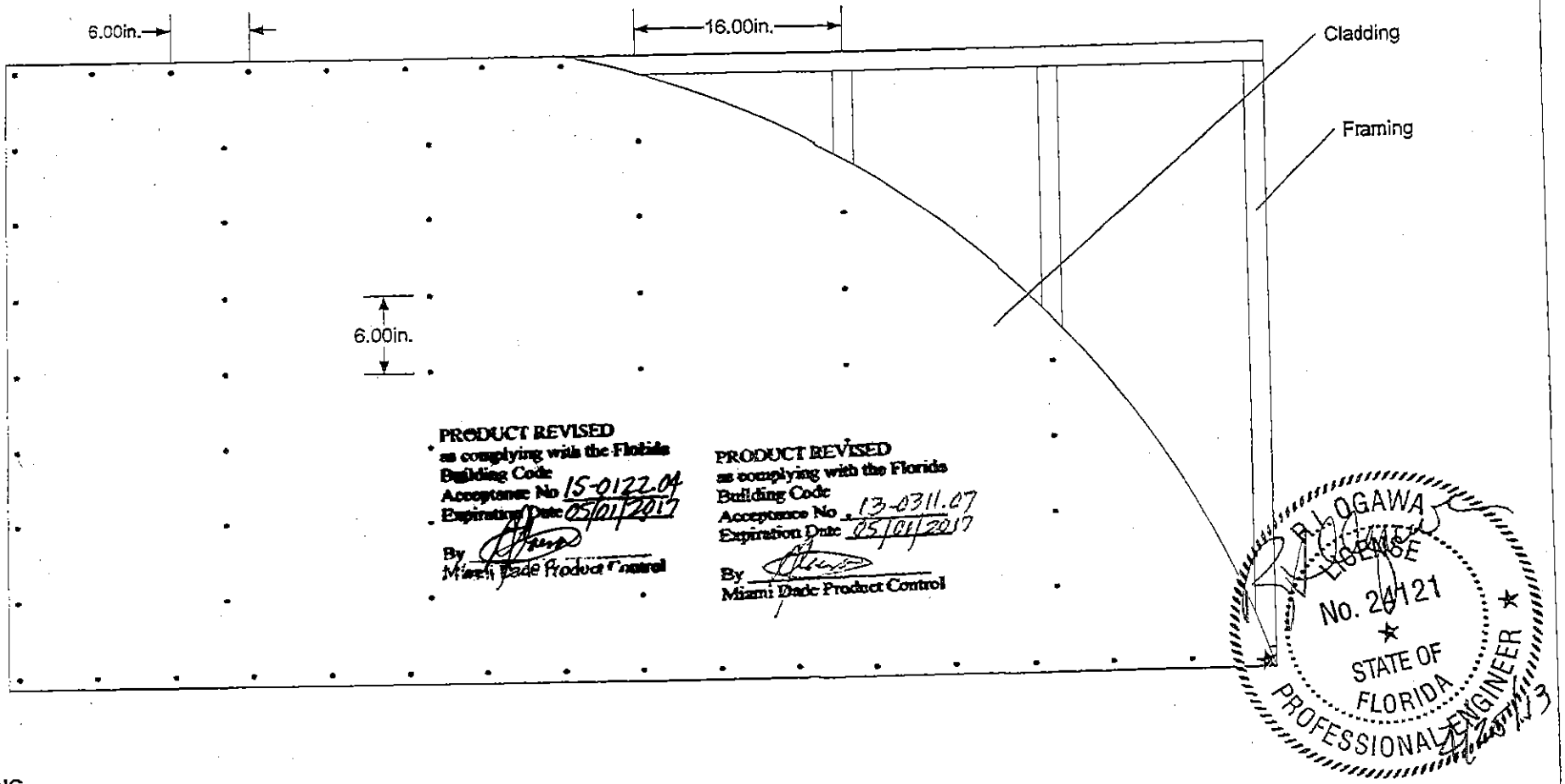

FRAMING

- NOMINAL 20 GAUGE 3-5/8" X 1-5/8" STEEL STUDS 16" O.C. FASTENED WITH 5/8" WAFER HEAD SCREWS (2 PER TOP AND BOTTOM CONNECTION)
- THE WALL AND SOFFIT FRAMES ARE TO BE DESIGNED BY THE ARCHITECT OR ENGINEER OF RECORD IN COMPLIANCE WITH THE FLORIDA BUILDING CODE

CLADDING

THE SOFFIT IS FASTENED WITH NO. 8-18, 0.315" HEAD DIAMETER X 1-1/4 " LONG CORROSION RESISTANT RIBBED BUGLE HEAD SCREWS (SCREW SHALL HAVE AT LEAST 3 FULL THREADS PENETRATING THE METAL FRAMING), PLACE SCREWS 6" O.C. AT PANEL EDGES AND INTERMEDIATE STUDS

FOR METAL AND WOOD STUDS, PROVISIONS FOR DIAPHRAGM ACTION AND GRAVITY LOAD ARE NOT PART OF THIS APPROVAL (MUST PROVIDE ALTERNATE PROVISIONS FOR THESIE LOADS)

JamesHardie	HARDIESOFFIT, CEMSOFFIT PANEL INSTALLATION DETAILS METAL STUD CONSTRUCTION			
	James Hardie Building Products, Inc. 10901 Elm Avenue Fontana, CA 92337			
Phone: 909-356-6300 Fax 909-427-0634	SIZE A	FSCM NO	DWG NO PNL-PLK-SOFF	REV 1
Creator: E. Gonzales	SCALE 1" = 1'-0"	Date: 4/24/2013	SHEET 12 OF 12	