MIAMI-DADE COUNTY
PRODUCT CONTROL SECTION
11805 SW 26 Street, Room 208
Miami, Florida 33175-2474
T (786) 315-2590 F (786) 315-2599
www.miamidade.gov/economy

DEPARTMENT OF REGULATORY AND ECONOMIC RESOURCES (RER)
BOARD AND CODE ADMINISTRATION DIVISION

NOTICE OF ACCEPTANCE (NOA)

Stanley Access Technologies, LLC
65 Scott Swamp Road
Farmington, CT 06032

SCOPE:

This NOA is being issued under the applicable rules and regulations governing the use of construction materials. The documentation submitted has been reviewed and accepted by Miami-Dade County RER -Product Control Section to be used in Miami Dade County and other areas where allowed by the Authority Having Jurisdiction (AHJ).

This NOA shall not be valid after the expiration date stated below. The Miami-Dade County Product Control Section (In Miami Dade County) and/or the AHJ (in areas other than Miami Dade County) reserve the right to have this product or material tested for quality assurance purposes. If this product or material fails to perform in the accepted manner, the manufacturer will incur the expense of such testing and the AHJ may immediately revoke, modify, or suspend the use of such product or material within their jurisdiction. RER reserves the right to revoke this acceptance, if it is determined by Miami-Dade County Product Control Section that this product or material fails to meet the requirements of the applicable building code.

This product is approved as described herein, and has been designed to comply with the Florida Building Code, including the High Velocity Hurricane Zone.

DESCRIPTION: Series "Dura Storm" Aluminum Automatic Sliding Glass Door (Steel Reinforced)
O-Sx-Sx-O and So-Sx-Sx-So w/ operable panel w/ Full Breakout-LMI

APPROVAL DOCUMENT: Drawing No. **14-1855** (former **12-SAT-14**), titled "Dura-Storm 2000/3000 Reinforced Bi-Parting Automatic Sliding Glass door", sheets 1 thru 10 of 10, prepared by Engineering Express, dated 07-01-12 and last revised on 10/14/2014, signed and sealed by Frank L. Bennardo, P.E., bearing the Miami-Dade County Product Control Revision stamp with the Notice of Acceptance number and expiration date by the Miami-Dade County Product Control Section.

MISSILE IMPACT RATING: Large and Small Missile Impact

LIMITATIONS:

1. See elevation for anchors requirements in sheet 1 and Header clusters details in sheets 4 & 5 and Threshold clusters in sheet 6. See sheets **2** & **3** for concealed 3-point locking (active panel) & 2-point (in-active)
2. When Horizontal muntin bars are excluded (see sheet 3), the DLO height not to exceed 68-3/16" max. Fixed glass more than 36" wide must be supported with approved setting blocks per FBC requirements
3. Electrical devices, functions and installation is not part of this approval and to be reviewed and approved by Authority Having Jurisdiction (AHJ). Not approved where water infiltration is required.

LABELING: Each unit shall bear a permanent label with the manufacturer's name or logo, city, state and series and following statement: "Miami-Dade County Product Control Approved", noted herein.

RENEWAL of this NOA shall be considered after a renewal application has been filed and there has been no change in the applicable building code negatively affecting the performance of this product.

TERMINATION of this NOA will occur after the expiration date or if there has been a revision or change in the materials, use, and/or manufacture of the product or process. Misuse of this NOA as an endorsement of any product, for sales, advertising or any other purposes shall automatically terminate this NOA. Failure to comply with any section of this NOA shall be cause for termination and removal of NOA.

ADVERTISEMENT: The NOA number preceded by the words Miami-Dade County, Florida, and followed by the expiration date may be displayed in advertising literature. If any portion of the NOA is displayed, then it shall be done in its entirety.

INSPECTION: A copy of this entire NOA shall be provided to the user by the manufacturer or its distributors and shall be available for inspection at the job site at the request of the Building Official.

This NOA **revises #13-0529.22** consists of this page 1 and evidence page E-1, as well as approval document mentioned above.

The submitted documentation was reviewed by **Ishaq I. Chanda, P.E.**

MIAMI-DADE COUNTY APPROVED

NOA No. 15-0127.06
Expiration Date: April 04, 2018
Approval Date: June 25, 2015
6/16/15

NOTICE OF ACCEPTANCE: EVIDENCE SUBMITTED

A. DRAWINGS

1. Manufacturer's die drawings and sections (submitted under file see below).
2. Drawing No. **14-1855** (former **12-SAT-14**), titled "Dura-Storm 2000/3000 Reinforced Bi-Parting Automatic Sliding Glass door", sheets 1 thru 10 of 10, prepared by Engineering Express, dated 07-01-12 and last revised on 10/14/2014, signed and sealed by Frank L. Bennardo, P.E.

B. TESTS (submitted under files #13-0529.22/#12-0807.04)

1. Test reports on: 1) Air Infiltration Test, per FBC, TAS 202-94
   2) Uniform Static Air Pressure Test, Loading per FBC TAS 202-94
   3) Water Resistance Test, per FBC, TAS 202-94 (Not conducted)
   4) Large Missile Impact Test per FBC, TAS 201-94
   5) Cyclic Wind Pressure Loading per FBC, TAS 203-94
   6) Forced Entry Test, per FBC 2411 3.2.1, TAS 202-94

Along with installation diagram of aluminum automatic entrance doors, prepared by Fenestration Testing Laboratory, Inc. Test Report No. **FTL-6803,** dated 05/11/12 and last revised on 03/21/13, signed and sealed by Marlin D. Brinson, P. E.
Note: This test report has been revised by an addendum letter dated Nov 21, 2012, issued by Fenestration Testing Lab, signed and sealed by Marlin D. Brinson, P. E.

C. CALCULATIONS

1. Anchor verification calculations and structural analysis, complying with FBC-2014 (5th Edition), prepared by Engineering Express, dated 05-13-15, signed and sealed by Frank L. Bennardo, P.E.
2. Glazing complies w/ ASTME-1300-02, -04 & -09.

D. QUALITY ASSURANCE

1. Miami Dade Department of Regulatory and Economic Resources (RER).

E. MATERIAL CERTIFICATIONS

1. Notice of Acceptance No. **13-1105.10** issued to SAF-GLAS, L.L.C. for "**SAF GLAS, Polycarbonate laminate**", expiring on 12/16/17.
2. Notice of Acceptance No. **11-0624.01** issued to E.I. DuPont DeNemours & Co., Inc. for their "**DuPont PVB Butacite ®**", expiring on 12/11/16.
3. Technical strength data of Trelleborg EPDM per ASTM C864.

F. STATEMENTS

1. Statement letter of conformance to FBC 2014(5th Edition), prepared by Engineering Express, dated May 13, 2015, signed and sealed by Frank L. Bennardo, P.E.
2. Statement letter of no financial interest, prepared by Engineering Express, dated 08-02-12, signed and sealed by Frank L. Bennardo, P.E. (submitted under file # **12-0807.04**)
3. Lab compliance as part of the above referenced test report.

G. OTHER

1. This NOA **revises** NOA **#13-0529.22**, expiring 04/04/18.
2. Test proposal # 11-1016, dated NOV 11, 2011 approved by PERA.
3. Manufacture supplied Adam Rites deadbolt/hook & bolts mechanism and G-86 CVR Panic exit brochures.

Ishaq I. Chanda

Ishaq I. Chanda, P.E.
Product Control Examiner
NOA No. 15-0127.06
Expiration Date: April 04, 2018
Approval Date: June 25, 2015

DURA-STORM SERIES 2000/3000 TYPICAL ELEVATIONS

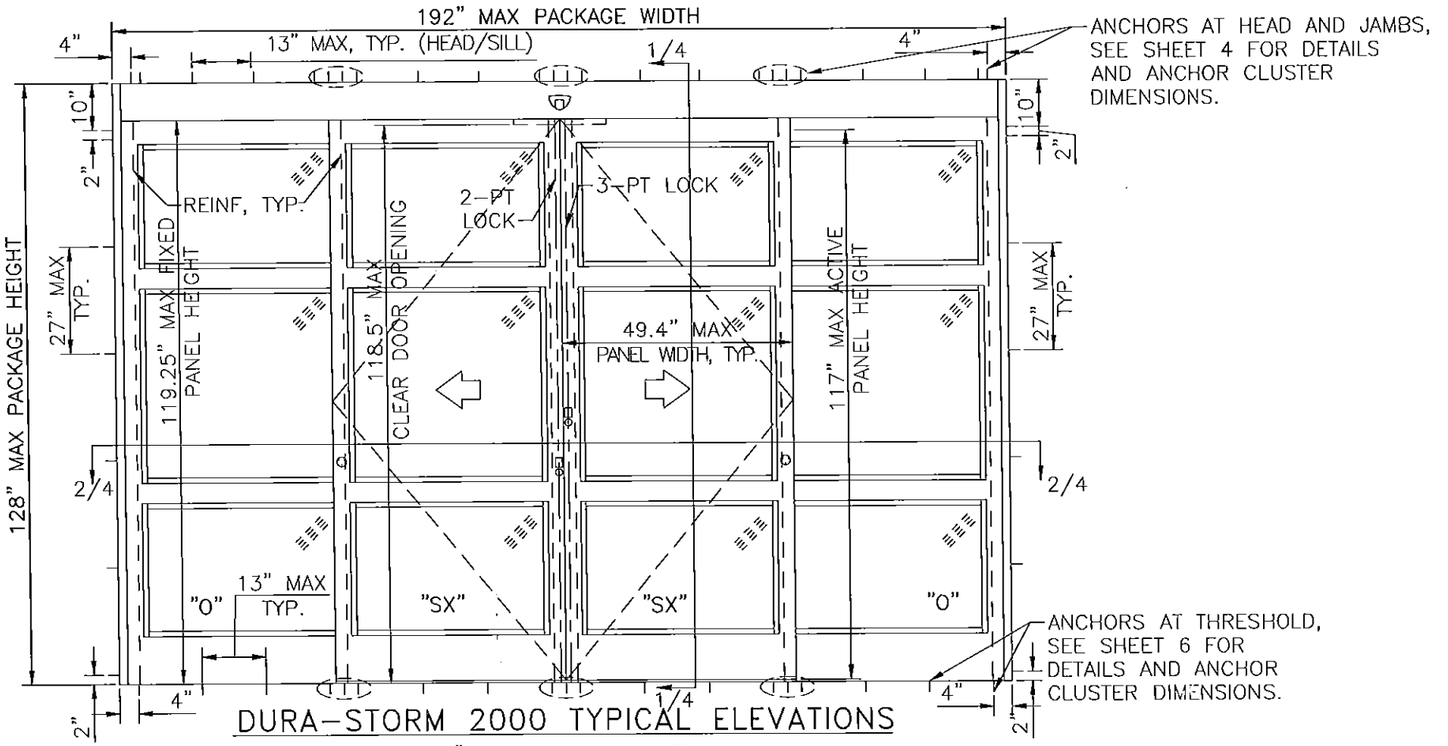

DURA-STORM 2000 TYPICAL ELEVATIONS

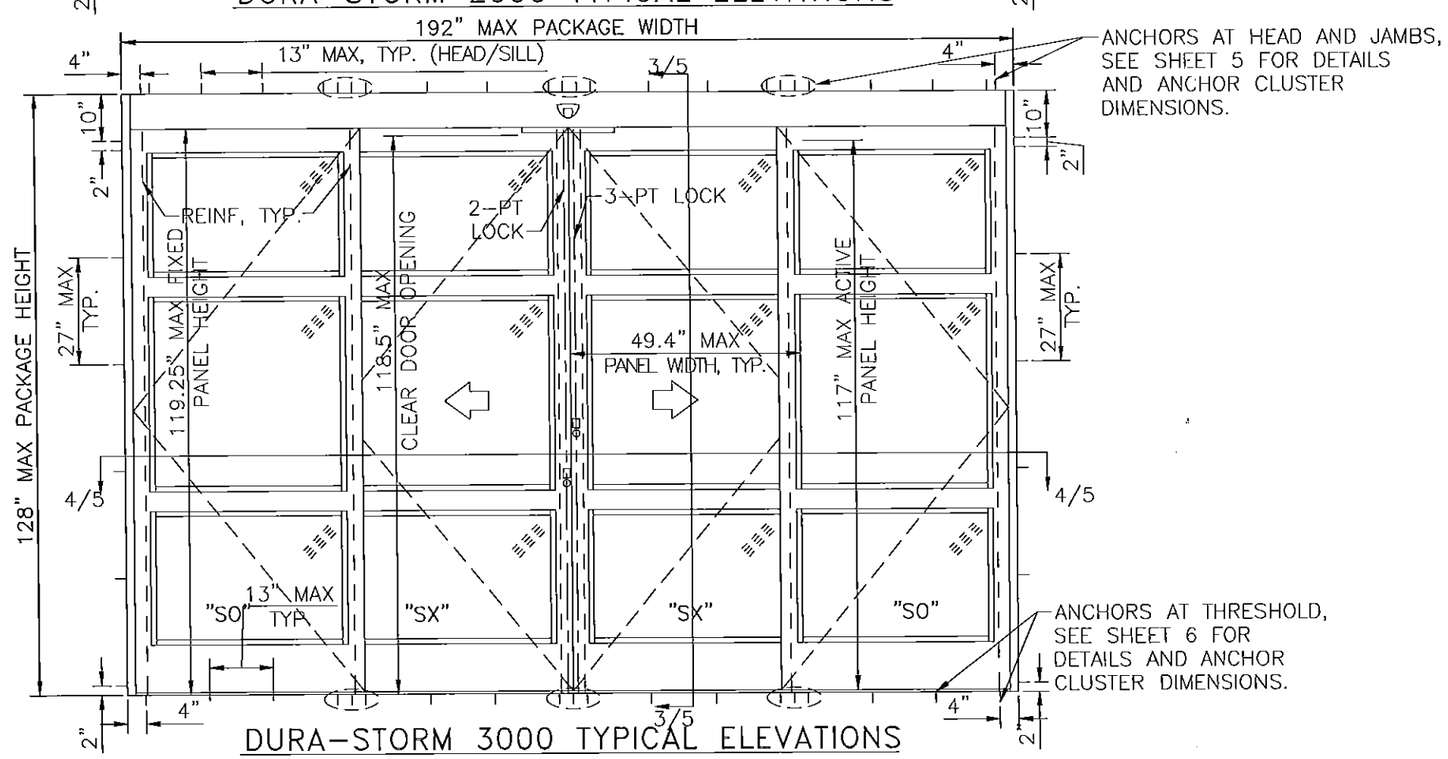

DURA-STORM 3000 TYPICAL ELEVATIONS

GENERAL NOTES

1. DOORS HAVE BEEN TESTED & DESIGNED IN ACCORDANCE WITH THE REQUIREMENTS OF THE 2010 FLORIDA BUILDING CODE & THE FBC FIFTH EDITION (2014) HIGH VELOCITY HURRICANE ZONE (HVHZ) AND MIAMI-DADE COUNTY PROTOCOLS TAS 201 FOR LARGE MISSILE IMPACT, TAS 202 FOR UNIFORM STATIC AIR PRESSURE AND TAS 203 FOR CYCLIC WIND LOADING.
2. PERMIT HOLDER SHALL VERIFY THE ADEQUACY OF THE EXISTING STRUCTURE TO WITHSTAND ADDITIONAL IMPOSED LOADS. 1X OR 2X WOOD BUCKS BY OTHERS SHALL BE ANCHORED PROPERLY TO TRANSFER LOADS TO THE EXISTING STRUCTURE.
3. NO INCREASE IN ALLOWABLE STRESS HAS BEEN USED IN THE DESIGN OF THESE PRODUCTS. WIND LOAD DURATION FACTOR Cd = 1.6 WAS USED FOR WOOD ANCHOR DESIGN.
4. POSITIVE AND NEGATIVE DESIGN PRESSURES CALCULATED FOR USE WITH THIS SYSTEM SHALL BE DETERMINED PER SEPARATE ENGINEERING IN ACCORDANCE WITH THE GOVERNING CODE. PRESSURE REQUIREMENTS AS DETERMINED IN ACCORDANCE WITH ASCE 7 AND CHAPTER 1609 OF THE FLORIDA BUILDING CODE SHALL BE LESS THAN OR EQUAL TO THE POSITIVE OR NEGATIVE DESIGN PRESSURE CAPACITY VALUES LISTED HEREIN FOR ANY ASSEMBLY AS SHOWN.
5. DESIGN PRESSURES NOTED HEREIN ARE BASED ON MAXIMUM TESTED PRESSURES DIVIDED BY A 1.5 SAFETY FACTOR.
6. DOORS DETAILED HEREIN HAVE BEEN DESIGNED AND TESTED TO THE MAXIMUM SPANS AND LOADS SHOWN ON THESE DRAWINGS REFERENCE FENESTRATION TESTING LAB REPORT 6803.
7. ANCHORS SHALL BE INSTALLED PER MANUFACTURER'S SPECIFICATIONS, SPACED AS NOTED HEREIN. MINIMUM EMBEDMENT AND EDGE DISTANCE EXCLUDES STUCCO, FOAM, BRICK, AND OTHER WALL FINISHES.
8. WHERE EXISTING STRUCTURE IS WOOD FRAMING, EXISTING CONDITIONS MAY VARY. FIELD VERIFY THAT FASTENERS ARE INTO ADEQUATE WOOD FRAMING MEMBERS, NOT INTO PLYWOOD.
9. WOOD HOST STRUCTURE SHALL BE "SOUTHERN PINE" G=0.55 OR GREATER DENSITY.
10. WHERE EXISTING STRUCTURE IS WOOD FRAMING, EXISTING CONDITIONS MAY VARY. FIELD VERIFY THAT FASTENERS ARE INTO ADEQUATE WOOD FRAMING MEMBERS, NOT INTO PLYWOOD.
11. THE SYSTEM DETAILED HEREIN IS GENERIC AND DOES NOT PROVIDE INFORMATION FOR A SPECIFIC SITE. FOR SITE CONDITIONS DIFFERENT FROM THE CONDITIONS DETAILED HEREIN, A LICENSED ENGINEER OR REGISTERED ARCHITECT SHALL PREPARE SITE SPECIFIC DOCUMENTS FOR USE IN CONJUNCTION WITH THIS DOCUMENT FOR INSTALLATIONS OUTSIDE THE HVHZ; WITHIN THE HVHZ, A ONE-TIME APPROVAL FROM MIAMI-DADE COUNTY SHALL BE OBTAINED.
12. ALL BOLTS AND WASHERS SHALL BE ZINC COATED, GALVANIZED, OR STAINLESS STEEL WITH A MINIMUM TENSILE STRENGTH OF 60 KSI, EXCEPT INSTALLATION ANCHORS.
13. ALL SINGLE SLIDE ENTRANCES ARE SHOWN "RIGHT HAND"; "LEFT HAND" IS MIRROR IMAGE.

SYSTEM NOTES

1. ALL ALUMINUM PARTS SHALL BE 6063-T6 ALUMINUM ALLOY AND TEMPER, UNLESS OTHERWISE NOTED.
2. GLAZING 9/16" LAMINATED, IMPACT RATED (SEE GLAZING DETAIL SHEET 9)
3. CORNER PANEL CONSTRUCTION: PANEL CORNERS ARE BUTT JOINED, SECURED WITH FOUR (4) FULL WIDTH 5/16" THREADED TIE RODS AT TOP RAIL, INTERMEDIATE HORIZONTAL MUNTIN BAR, AND BOTTOM RAIL. ALL JOINTS ARE WELDED.
4. THE GLAZING MATERIAL IN BOTH FIXED AND SLIDING PANELS OF ALL SLIDING DOORS MUST COMPLY WITH THE REQUIREMENTS IN THE PERFORMANCE SPECIFICATIONS AND METHODS OF TEST FOR SAFETY GLAZING MATERIALS USED IN BUILDINGS, PER FBC REQUIREMENTS

PRODUCT REVIEWED
as complying with the Florida Building Code
Acceptance No. 15-0127.06
Expiration Date April 4, 2018
By Miami Dade Product Control

FRANK L. BENNARDO, P.E.
LICENSE
No. 46549
10/14/2014
STATE OF FLORIDA
PROFESSIONAL ENGINEER

ENGINEER EXPRESS
160 SW 12th AVENUE,
DEERFIELD BEACH, FL 33442
PH: (954) 354-0660 FAX: (954) 354-0665
WWW.ENGEXP.COM
CERT OF AUTH #9885
A FRANK L. BENNARDO, P.E., INC. INNOVATION

STANLEY
ACCESS TECHNOLOGIES
65 SCOTT SWAMP ROAD, FARMINGTON, CT 06032

SERIES "DURA-STORM 2000/3000"
REINF BI-PARTING AUTOMATIC SLIDING GLASS DOOR (LMI)
MIAMI-DADE NOTICE OF ACCEPTANCE

REMARKS	DRWN	CHKD	DATE
INIT ISSUE	KL	FLB	07/01/12
REVIEWER COMMENT	KL	FLB	11/26/12
ADDL COMMENTS	KL	FLB	01/28/13
ADDL COMMENTS	KL	FLB	03/22/13
ADDL COMMENTS	KL	FLB	04/01/13
REV. PER TESTING	KL	FLB	05/17/13
ADDL COMMENTS	KL	FLB	08/07/13
REV. FBC 5TH EDITION	CSL	TSB	10/14/14

14-1855

SCALE:

PAGE DESCRIPTION:

10

1

DURA-STORM SERIES 2000 ELEVATION AND PLAN

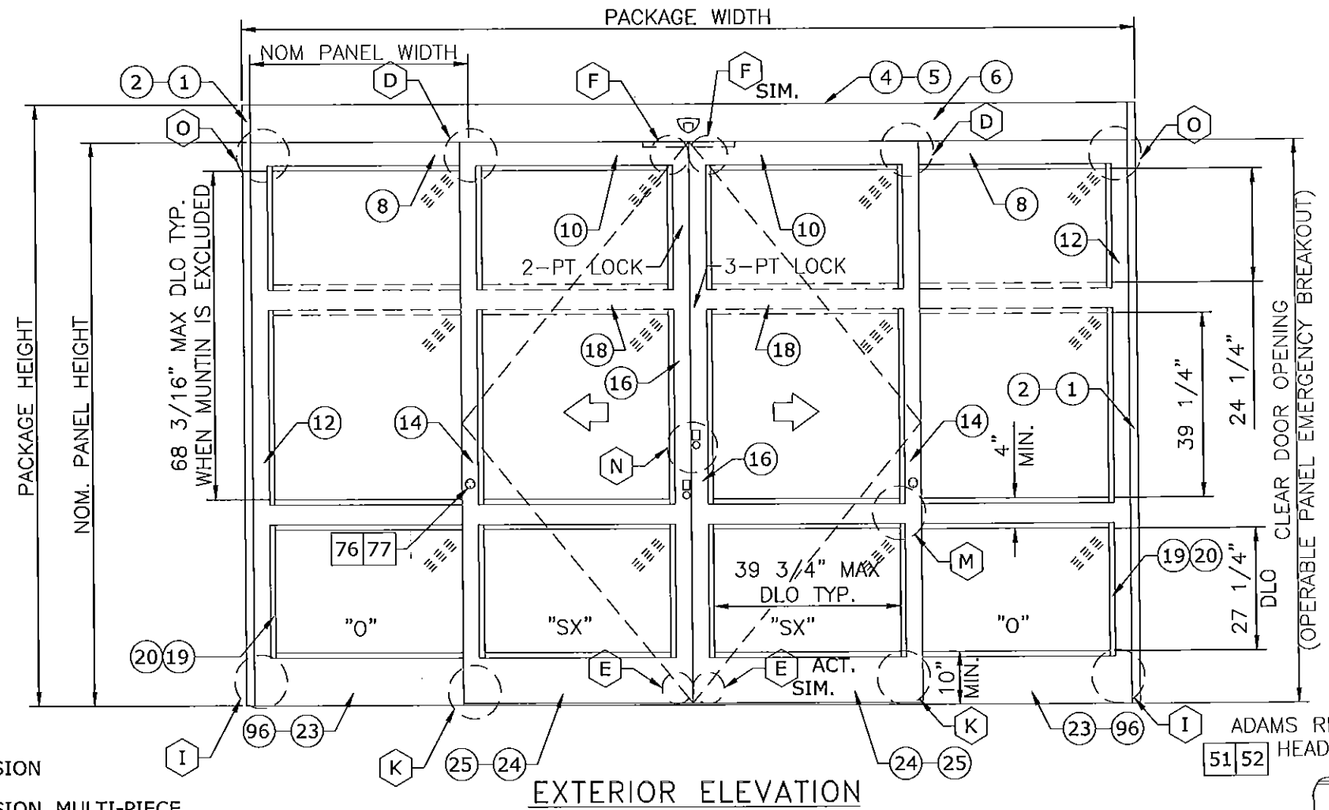

EXTERIOR ELEVATION

(XX) : EXTRUSION
(XX)(XX) : EXTRUSION, MULTI-PIECE
(XX)-(XX) : EXTRUSION, OPTION
[XX] : PART
[XX][XX] : PART, MULTI-PIECE
[XX]-[XX] : PART, OPTION
(XX) : DETAIL
(XX)-(XX) : DETAIL, OPTION

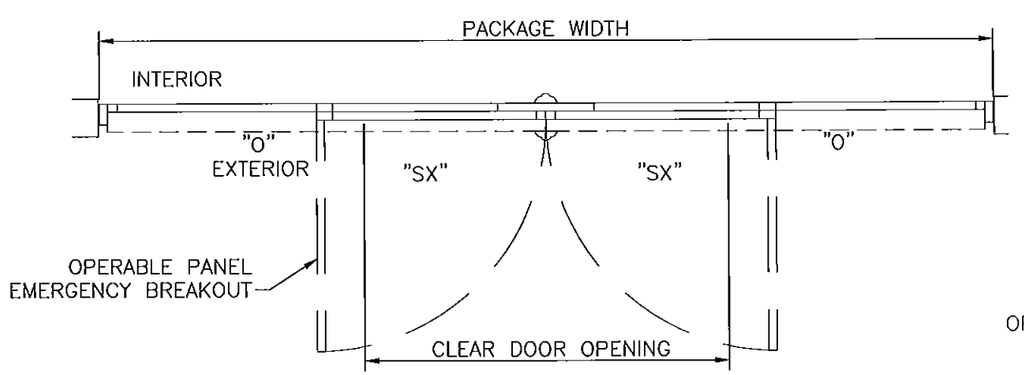

PLAN

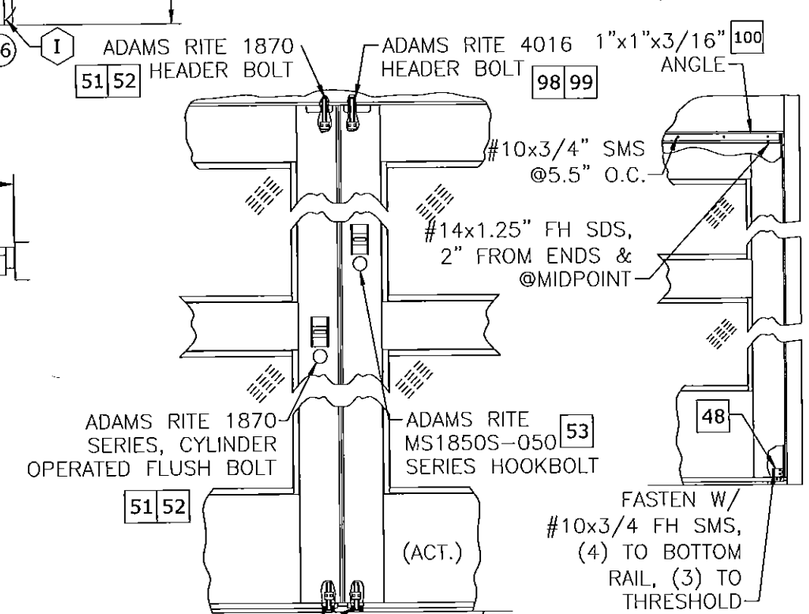

5-PT CONCEALED LOCKING SYSTEM

SERIES 2000 O-PANEL

DESIGN RATINGS		
MISSILE IMPACT RATING		
☒	LARGE AND SMALL MISSILE IMPACT	
DESIGN PRESSURE RATING (PSF[Pa])		
	WHERE WATER INFILTRATION RATING IS REQUIRED	WHERE WATER INFILTRATION RATING IS NOT REQUIRED
POSITIVE	NOT APPROVED	55 PSF
NEGATIVE	NOT APPROVED	55 PSF

SERIES 2000 AVAILABLE PACKAGE WIDTH INFORMATION*						
PACKAGE CONFIG	PACKAGE WIDTH	ROUGH OPENING	NOMINAL CLEAR DOOR OPENING	NOMINAL PANEL WIDTH (SX)	NOMINAL PANEL WIDTH (O)	CAULKING ALLOWANCE
1	192.0"	192.5"	78.3"	49.4"	49.4"	1/4" / SIDE
2	179.5"	180.0"	72.0"	46.3"	46.3"	1/4" / SIDE

SERIES 2000 AVAILABLE PACKAGE HEIGHT INFORMATION*				
PACKAGE CONFIG	PACKAGE HEIGHT	ROUGH OPENING	NOMINAL CLEAR DOOR OPENING	CAULKING ALLOWANCE
1	104.0"	104.3"	94.5"	1/4" TOP
2	128.0"	128.3"	118.5"	1/4" TOP

* NOTE: THIS SYSTEM WAS TESTED AT A SIZE OF 192"X128", HOWEVER THESE TABLES INDICATE PACKAGE SIZES AVAILABLE FROM MANUFACTURER.

PRODUCT REVISED
as complying with the Florida Building Code
Acceptance No. 15-0127.06
Expiration Date 4/24/18
By Chang J. Chan
Miami Dade Product Control

FRANK L. BENNARDO
FRANK L. BENNARDO, P.E.
PE0046549
LICENSE
No. 46549
10/14/2014
STATE OF FLORIDA
PROFESSIONAL ENGINEER

ENGINEERING EXPRESS, INC.
160 SW 12th AVENUE
DEERFIELD BEACH, FL 33442
Ph: (954) 354-0660 Fax: (954) 354-0443
WWW.ENGEXP.COM
CERT OF AUTH #9885
A. FRANK L. BENNARDO, P.E., INC. INNOVATIONS

STANLEY
ACCESS TECHNOLOGIES
65 SCOTT SWAMP ROAD, FARMINGTON, CT 06032

SERIES "DURA-STORM 2000/3000"
REINF BI-PARTING AUTOMATIC SLIDING GLASS DOOR (LMI)
MIAMI-DADE NOTICE OF ACCEPTANCE

REMARKS	DRWN	CHKD	DATE
INIT ISSUE	KL	FLB	07/01/12
REVIEWER COMMENT	KL	FLB	11/26/12
ADD'L COMMENTS	KL	FLB	01/28/13
ADD'L COMMENTS	KL	FLB	03/22/13
ADD'L COMMNETS	KL	FLB	04/01/13
REV. PER TESTING	KL	FLB	05/17/13
ADD'L COMMENTS	KL	FLB	08/07/13
REV. FBC 5TH EDITION	CSL	TSB	10/14/14

14-1855
SCALE:
PAGE DESCRIPTION:

NOTES
1. TYPICAL DOOR SHOWN. STILE, RAIL AND MUNTIN OPTIONS AVAILABLE AS INDICATED.
2. HORIZONTAL MUNTIN BAR NOT REQUIRED AS INDICATED BY DASHED LINES. MAX DLO: 39 3/4" W x 68 3/16" H AS SHOWN.
3. 5-POINT LOCKING STANDARD (3-PT ACTIVE & 2-PT).
4. PRODUCT SHALL BE MANUFACTURED AND INSTALLED IN ACCORDANCE WITH PRODUCT APPROVALS.
5. SEE SHEETS 4 THROUGH 6 FOR REQUIRED ANCHORAGE.
6. SEE SHEET 9 FOR GLAZING DETAILS.

DURA-STORM SERIES 3000 ELEVATION AND PLAN

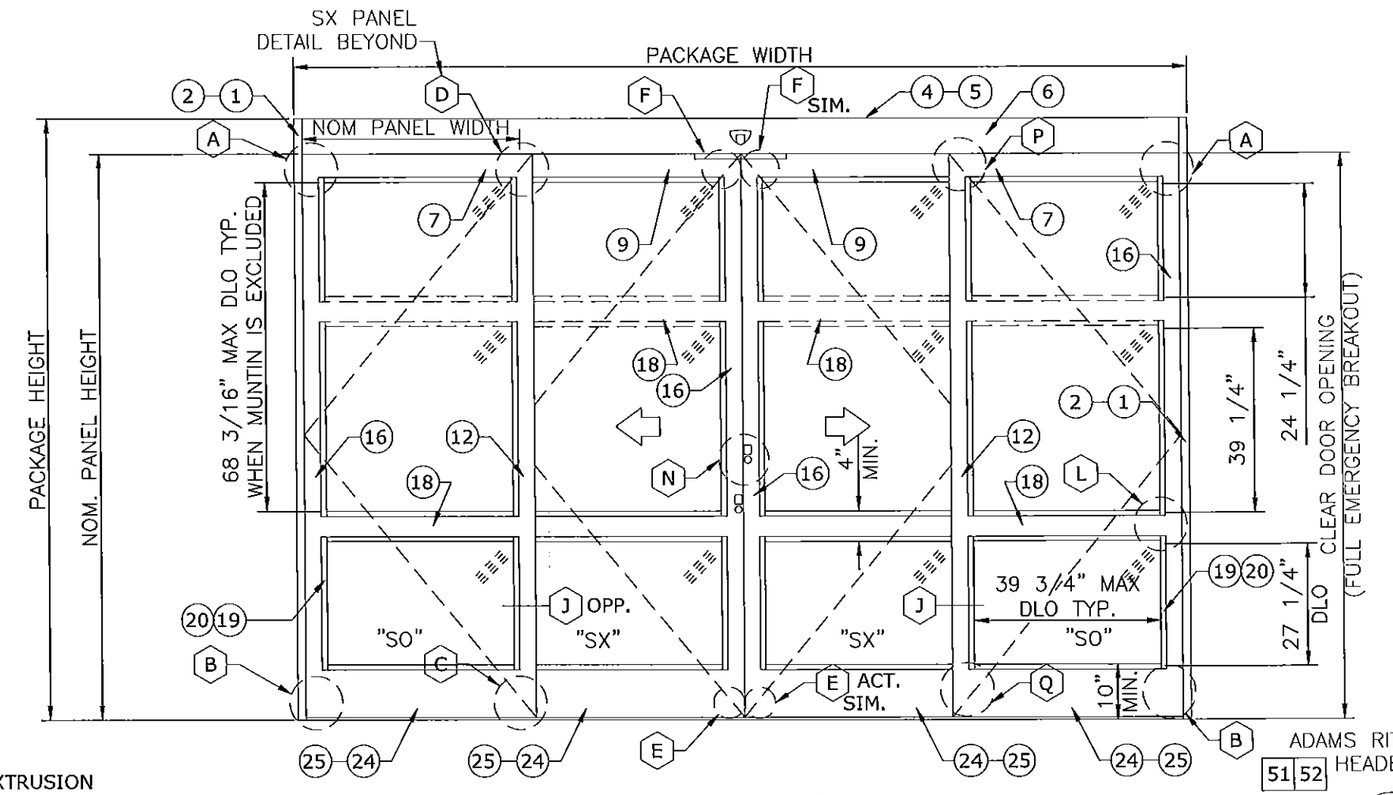

EXTERIOR ELEVATION

(XX) : EXTRUSION
(XX)(XX) : EXTRUSION, MULTI-PIECE
(XX)–(XX) : EXTRUSION, OPTION
[XX] : PART
[XX][XX] : PART, MULTI-PIECE
[XX]–[XX] : PART, OPTION
⟨XX⟩ : DETAIL
⟨XX⟩–⟨XX⟩ : DETAIL, OPTION

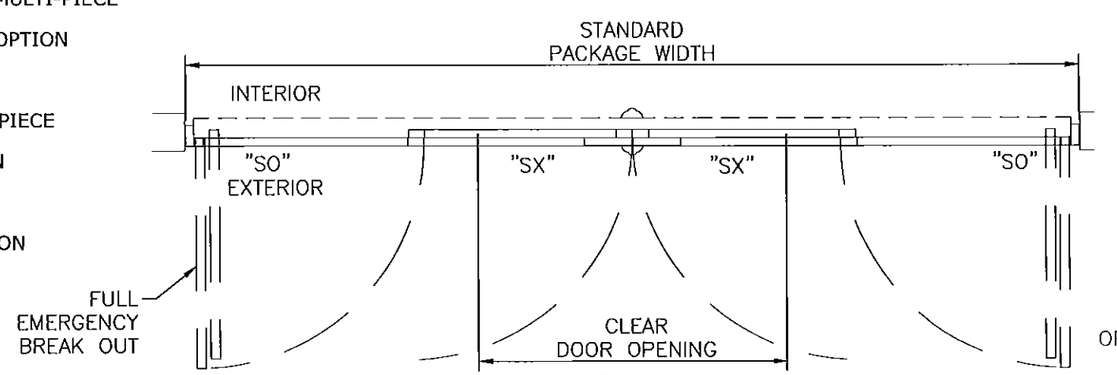

PLAN

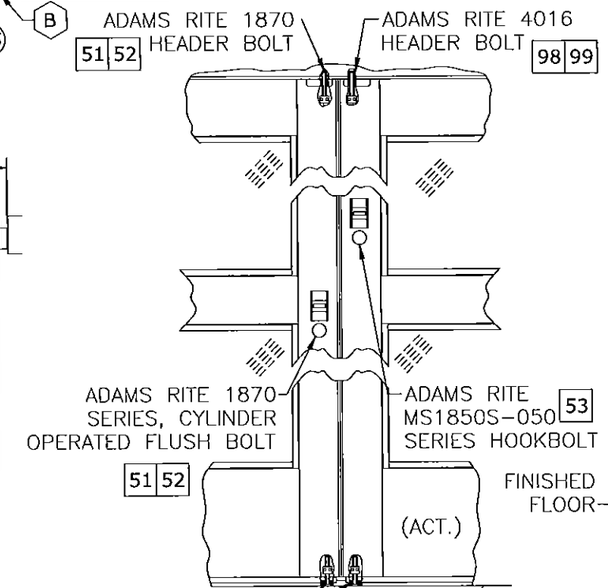

5-PT CONCEALED LOCKING SYSTEM

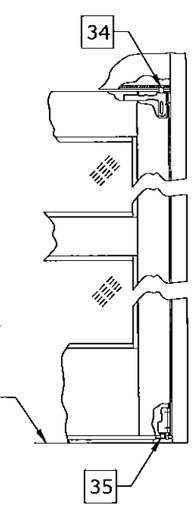

SERIES 3000 SO-PANEL

NOTES
1. TYPICAL DOOR SHOWN. STILE, RAIL AND MUNTIN OPTIONS AVAILABLE AS INDICATED.
2. HORIZONTAL MUNTIN BAR NOT REQUIRED, AS INDICATED BY DASHED LINES. MAX DLO: 39 3/4" W X 68 3/16" H AS SHOWN
3. 5-POINT LOCKING STANDARD (3-PT ACTIVE & 2-PT).
4. PRODUCT SHALL BE MANUFACTURED AND INSTALLED IN ACCORDANCE WITH PRODUCT APPROVALS.
5. SEE SHEETS 4 THROUGH 6 FOR REQUIRED ANCHORAGE.
6. SEE SHEET 9 FOR GLAZING DETAILS.

DESIGN RATINGS		
MISSILE IMPACT RATING		
☒	LARGE AND SMALL MISSILE IMPACT	
DESIGN PRESSURE RATING (PSF[Pa])		
	WHERE WATER INFILTRATION RATING IS REQUIRED	WHERE WATER INFILTRATION RATING IS NOT REQUIRED
POSITIVE	NOT APPROVED	55 PSF
NEGATIVE	NOT APPROVED	55 PSF

SERIES 3000 AVAILABLE PACKAGE WIDTH INFORMATION*

PACKAGE CONFIG	PACKAGE WIDTH	ROUGH OPENING	NOMINAL CLEAR DOOR OPENING	NOMINAL PANEL WIDTH (SX)	NOMINAL PANEL WIDTH (O)	CAULKING ALLOWANCE
1	192.0"	192.5"	78.3"	49.4"	49.4"	1/4" / SIDE
2	179.5"	180.0"	72.0"	46.3"	46.3"	1/4" / SIDE

SERIES 3000 AVAILABLE PACKAGE HEIGHT INFORMATION*

PACKAGE CONFIG	PACKAGE HEIGHT	ROUGH OPENING	NOMINAL CLEAR DOOR OPENING	CAULKING ALLOWANCE
1	104.0"	104.3"	94.5"	1/4" TOP
2	128.0"	128.3"	118.5"	1/4" TOP

* NOTE: THIS SYSTEM WAS TESTED AT A SIZE OF 192"X128", HOWEVER THESE TABLES INDICATE PACKAGE SIZES AVAILABLE FROM MANUFACTURER.

PRODUCT REVISED
as complying with the Florida Building Code
Acceptance No. 15-0127.06
Expiration Date 4/4/18
By [signature]
Miami-Dade Product Control

FRANK L. BENNARDO, P.E. #PE0046549
FRANK L. BENNARDO
No. 46549
10/14/2014
STATE OF FLORIDA
PROFESSIONAL ENGINEER

ENGINEERING EXPRESS
160 SW 12th AVENUE, DEERFIELD BEACH, FL 33442
Ph: (954) 354-0660 Fax: (954) 354-0673
WWW.ENGEXP.COM
CERT OF AUTH #9885
A FRANK L. BENNARDO, P.E., INC. INNOVATION

STANLEY
ACCESS TECHNOLOGIES
65 SCOTT SWAMP ROAD, FARMINGTON, CT 06032

SERIES "DURA-STORM 2000/3000"
REINF BI-PARTING AUTOMATIC SLIDING GLASS DOOR (LMI)
MIAMI-DADE NOTICE OF ACCEPTANCE

REMARKS	DRWN	CHKD	DATE
INIT. ISSUE	KL	FLB	07/01/12
REVIEWER COMMENT	KL	FLB	11/26/12
ADD'L COMMENTS	KL	FLB	01/28/13
ADD'L COMMENTS	KL	FLB	03/22/13
ADD'L COMMENTS	KL	FLB	04/01/13
REV. PER TESTING	KL	FLB	05/17/13
ADD'L COMMENTS	KL	FLB	08/07/13
REV. FBC 5TH EDITION	CSL	TSB	10/14/14

14-1855
SCALE:
PAGE DESCRIPTION:

DURA-STORM SERIES 2000 SECTIONS & ANCHORING, STANDARD 5-PT LOCKS

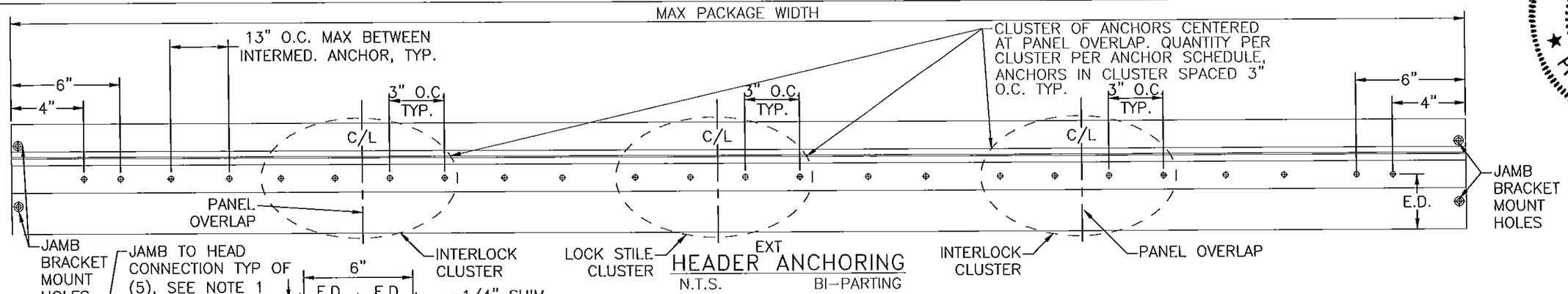

HEADER ANCHORING
N.T.S. BI-PARTING

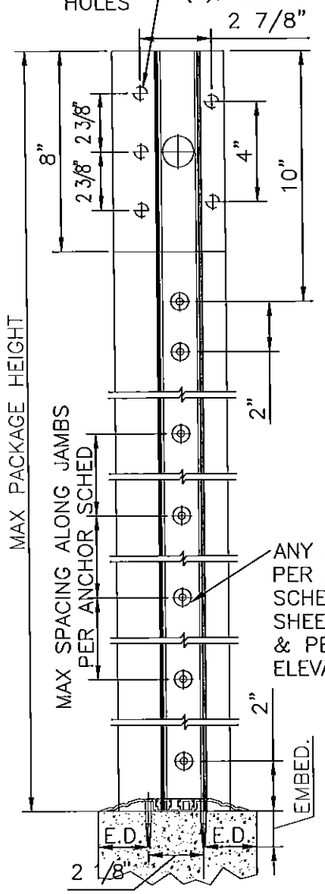

FRAME ANCHORING
N.T.S.

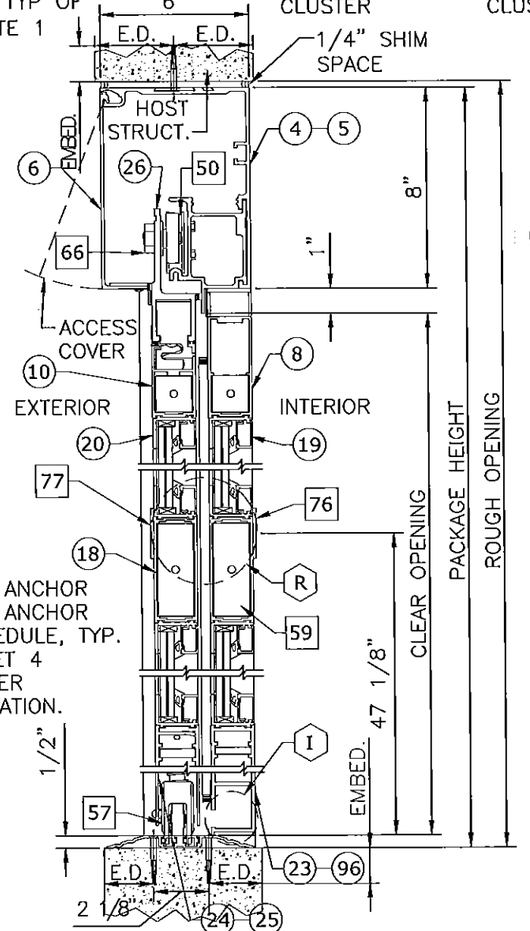

1 VERTICAL SECTION
2"=1'-0"

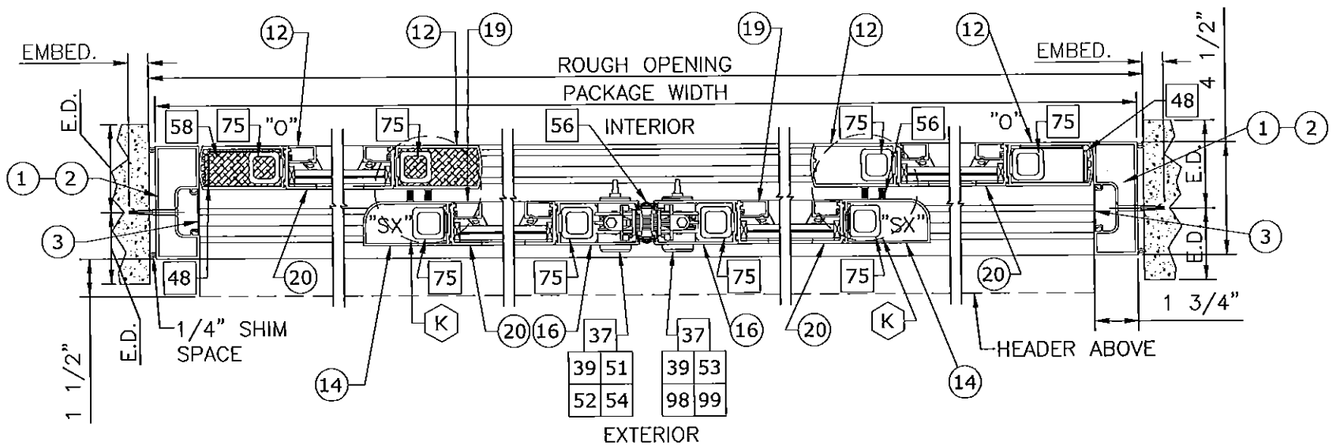

2 HORIZONTAL SECTION
2"=1'-0" BI-PARTING

(XX) : EXTRUSION
(XX)(XX) : EXTRUSION, MULTI-PIECE
(XX)-(XX) : EXTRUSION, OPTION
[XX] : PART
[XX][XX] : PART, MULTI-PIECE
[XX]-[XX] : PART, OPTION
⟨XX⟩ : DETAIL
⟨XX⟩-⟨XX⟩ : DETAIL, OPTION

SEE THRESHOLD ANCHORS SHEET 6. APPLICABLE TO 3KSI CONCRETE ONLY.

PRODUCT REVISED
as complying with the Florida Building Code
Acceptance No. 15-0127.06
Expiration Date 4/4/18
By
Miami Dade Product Control

NOTES
1. JAMB TO HEAD CONNECTION FASTENERS; 5/16-18 HHMS WITH WASHER.

ANCHOR SCHEDULE

HOST STRUCTURE	ANCHOR	EMBEDMENT	EDGE DISTANCE	NUMBER OF ANCHORS PER INTERLOCK/LOCK STILE CLUSTER		MAX INTERMEDIATE ANCHOR SPACING ALONG HEAD & THRESHOLD	MAX ANCHOR SPACING ALONG JAMBS
				HEAD	THRESHOLD		
3KSI MIN. CONCRETE	1/4" POWERS/RAWL PERMASEAL TAPPER	1-1/2"	3"	4	6	13" O.C. MAX	27" O.C. MAX
3/16" MIN. A36 STEEL	1/4-20 SAE GR. 5 SMS	FULL THREAD ENGAGEMENT	1/2"	4	N/A	13" O.C. MAX	27" O.C. MAX
G=0.55 MIN. WOOD	#14 WOOD SCREW	2"	3/4"	4	N/A	13" O.C. MAX	27" O.C. MAX
1/8" MIN. 6063-T5 ALUM.	#14 SAE GR. 5 SDS	FULL THREAD ENGAGEMENT	1/2"	4	N/A	13" O.C. MAX	27" O.C. MAX

FRANK L. BENNARDO, P.E.
LICENSE No. 46549
STATE OF FLORIDA
PROFESSIONAL ENGINEER
10/14/2014
ENGINEERING EXPRESS®
160 SW 12th AVENUE, #206
DEERFIELD BEACH, FL 33442
Ph: (954) 354-0660 Fax: (954) 354-0443
WWW.ENGEXP.COM
CERT OF AUTH #9885
A. FRANK L. BENNARDO, P.E., INC. INNOVATION

STANLEY
ACCESS TECHNOLOGIES
65 SCOTT SWAMP ROAD, FARMINGTON, CT 06032

SERIES "DURA-STORM 2000/3000"
REINF BI-PARTING AUTOMATIC SLIDING GLASS DOOR (LMI)
MIAMI-DADE NOTICE OF ACCEPTANCE

REMARKS	DRWN	CHK'D	DATE
INIT ISSUE	KL	FLB	07/01/12
REVIEWER COMMENT	KL	FLB	11/26/12
ADD'L COMMENTS	KL	FLB	01/28/13
ADD'L COMMENTS	KL	FLB	03/22/13
ADD'L COMMENTS	KL	FLB	04/01/13
REV. PER TESTING	KL	FLB	05/17/13
ADD'L COMMENTS	KL	FLB	08/07/13
REV. FBC 5TH EDITION	CSL	TSB	10/14/14

14-1855
SCALE:
PAGE DESCRIPTION:

DURA-STORM SERIES 3000 SECTIONS & ANCORING, STANDARD 5-PT LOCKS

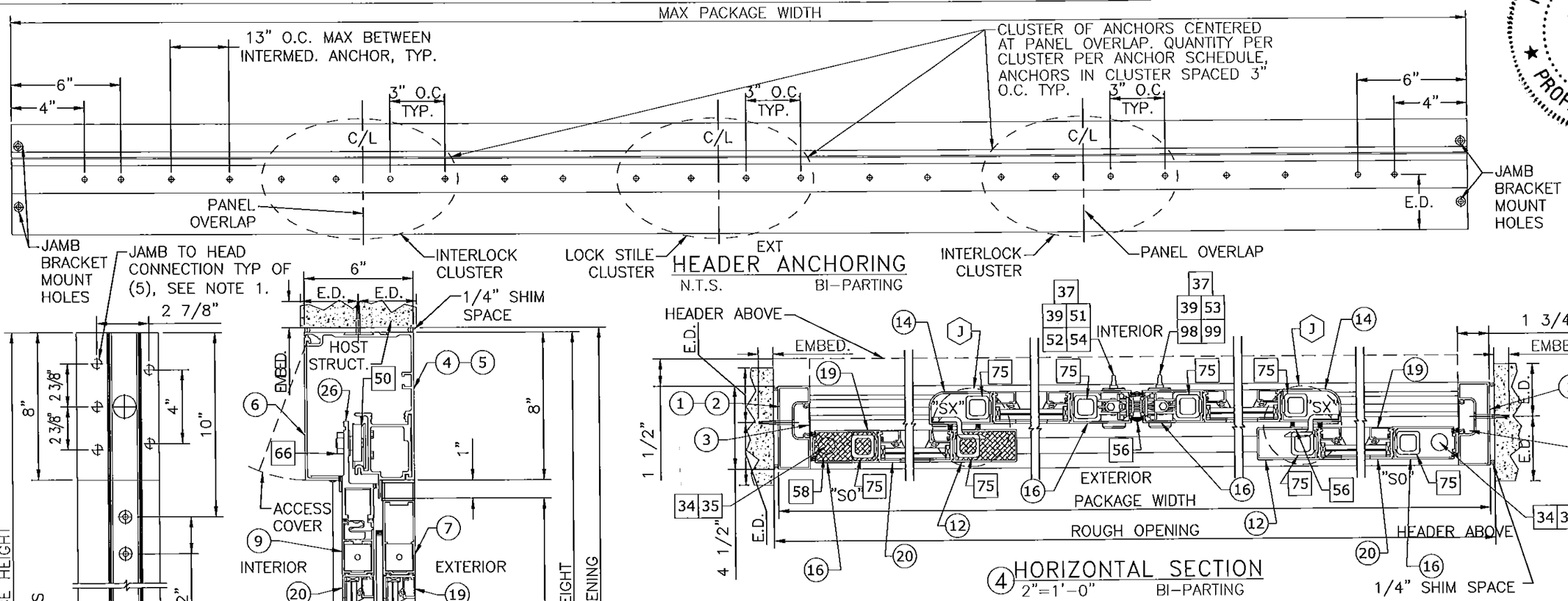

HEADER ANCHORING
N.T.S. BI-PARTING

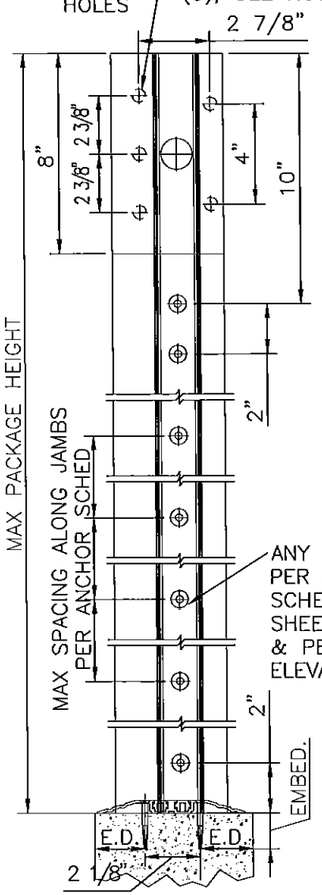

FRAME ANCHORING
N.T.S.

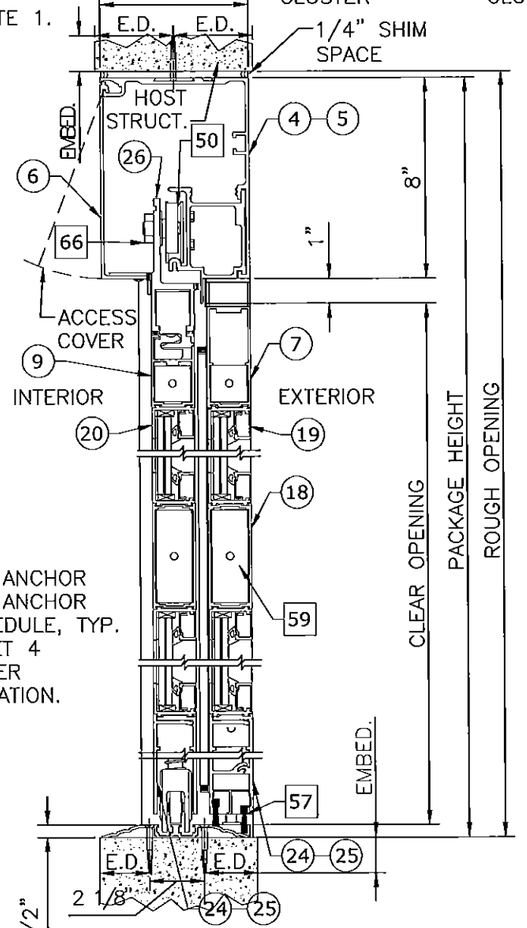

3 VERTICAL SECTION
2"=1'-0"

4 HORIZONTAL SECTION
2"=1'-0" BI-PARTING

XX : EXTRUSION
XX XX : EXTRUSION, MULTI-PIECE
XX—XX : EXTRUSION, OPTION
XX : PART
XX XX : PART, MULTI-PIECE
XX—XX : PART, OPTION
XX : DETAIL
XX—XX : DETAIL, OPTION

SEE THRESHOLD ANCHORS SHEET 6. APPLICABLE TO 3KSI CONCRETE ONLY.

PRODUCT REVISED
as complying with the Florida Building Code
Acceptance No. 15-0127.06
Expiration Date 4/4/18
By [signature]
Miami Dade Product Control

NOTE: SEE SHEET 4 FOR ANCHOR SCHEDULE AND ALLOWABLE ANCHOR TYPES

NOTES
1. JAMB TO HEAD CONNECTION FASTENERS; 5/16-18 HHMS WITH WASHER.

FRANK L. BENNARDO, P.E.
#PE0046549
LICENSE No. 46549 STATE OF FLORIDA PROFESSIONAL ENGINEER
10/14/2014

ENGINEERING EXPRESS
160 SW 12th AVENUE, #1066
DEERFIELD BEACH, FL 33442
PH: (954) 354-0660 FAX: (954) 354-0443
WWW.ENGEXP.COM
CERT OF AUTH #9885
A FRANK L. BENNARDO, P.E., INC. INNOVATION

STANLEY
ACCESS TECHNOLOGIES
65 SCOTT SWAMP ROAD, FARMINGTON, CT 06032

SERIES "DURA-STORM 2000/3000"
REINF BI-PARTING AUTOMATIC SLIDING GLASS DOOR (LMI)
MIAMI-DADE NOTICE OF ACCEPTANCE

REMARKS	DRWN	CHKD	DATE
INIT ISSUE	KL	FLB	07/01/12
REVIEWER COMMENT	KL	FLB	11/26/12
ADD'L COMMENTS	KL	FLB	01/28/13
ADD'L COMMENTS	KL	FLB	03/22/13
ADD'L COMMNETS	KL	FLB	04/01/13
REV. PER TESTING	KL	FLB	05/17/13
ADD'L COMMENTS	KL	FLB	08/07/13
REV. FBC 5TH EDITION	CSL	TSB	10/14/14

14-1855
SCALE:
PAGE DESCRIPTION:

10

5

DURA-STORM SERIES 2000/3000 THRESHOLDS & ANCHORING

NOTE: USE CONCRETE ANCHOR PER ANCHOR SCHEDULE FOR ALL THRESHOLD ANCHORAGE DETAILS SHOWN HEREIN. SEE SHEET 4 FOR ANCHOR SCHEDULE AND ALLOWABLE CONCRETE ANCHOR TYPES

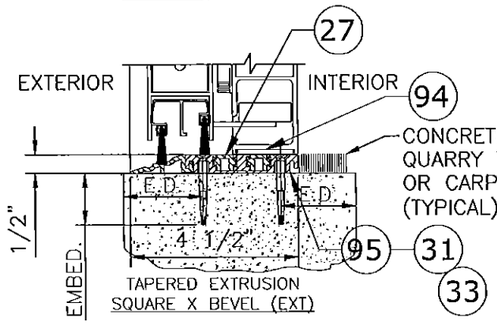

THRESHOLD–TAPERED EXT
3"=1'–0" 2000

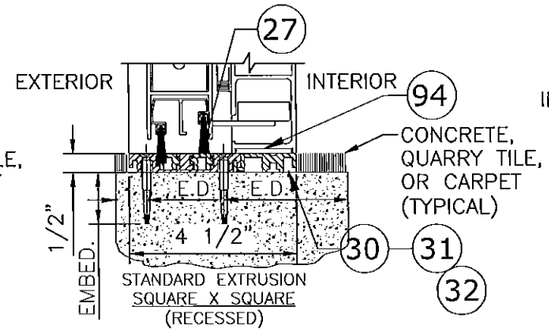

THRESHOLD–SQUARE
3"=1'–0" 2000

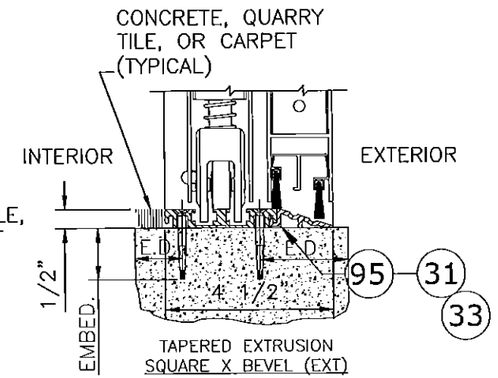

THRESHOLD–TAPERED EXT
3"=1'–0" 3000

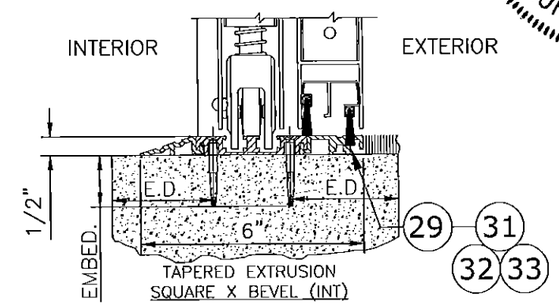

THRESHOLD–TAPERED INT
3"=1'–0" 3000

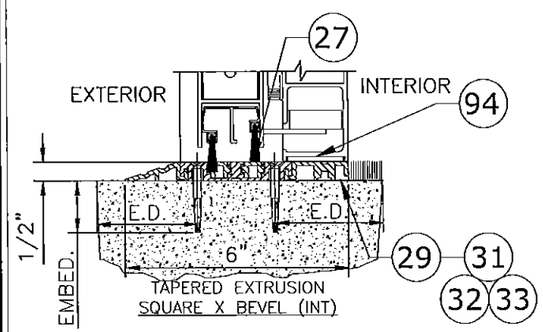

THRESHOLD–TAPERED INT
3"=1'–0" 2000

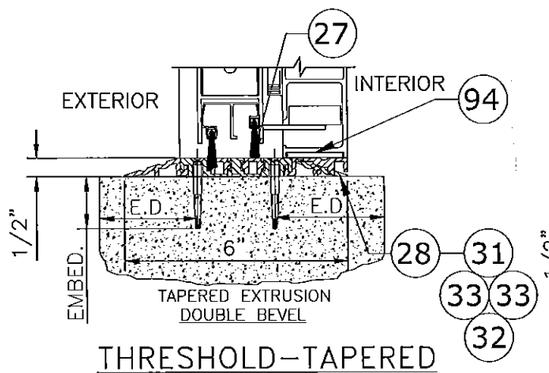

THRESHOLD–TAPERED
3"=1'–0" 2000

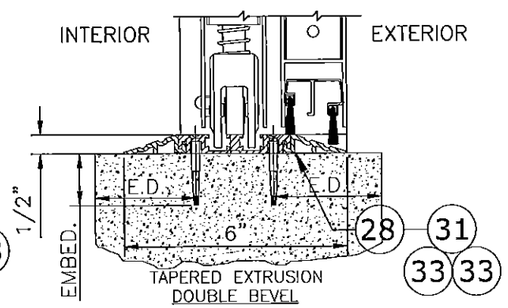

THRESHOLD–TAPERED
3"=1'–0" 3000

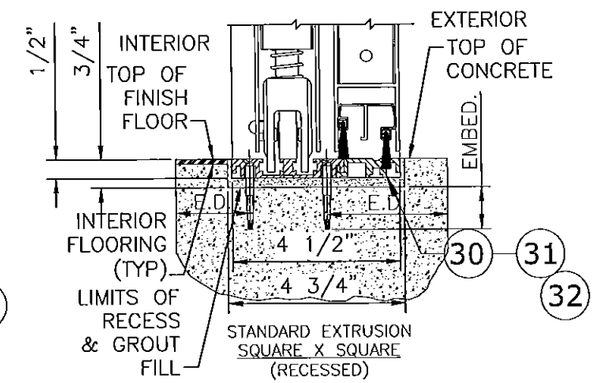

THRESHOLD–SQUARE
3"=1'–0" 3000

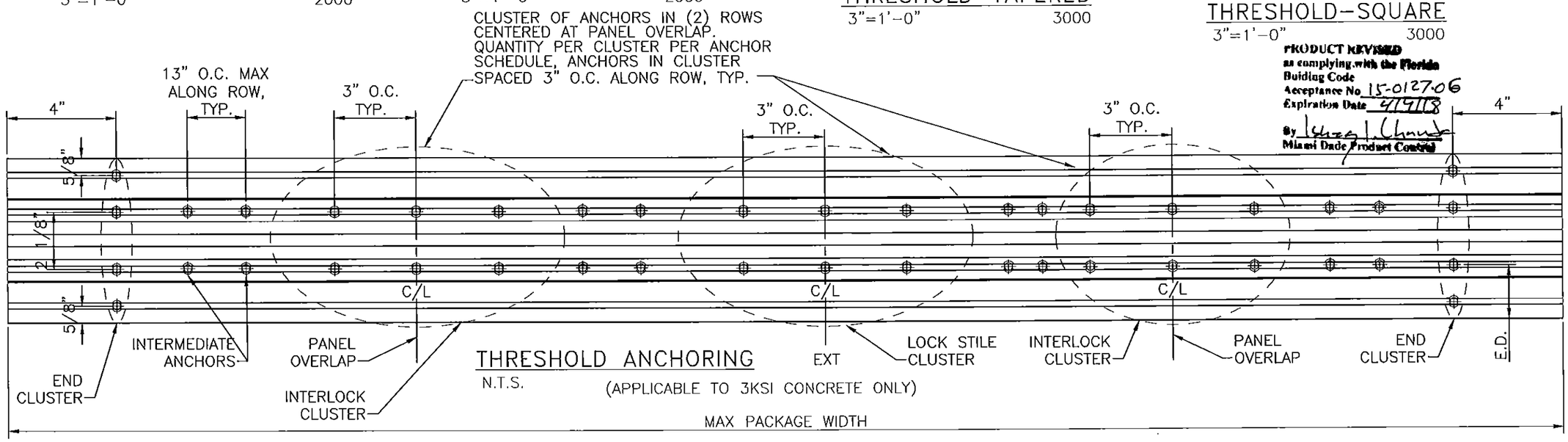

THRESHOLD ANCHORING
N.T.S.
(APPLICABLE TO 3KSI CONCRETE ONLY)

PRODUCT REVIEWED
as complying with the Florida
Building Code
Acceptance No. 15-0127.06
Expiration Date 4/19/18
By [signature]
Miami Dade Product Control

FRANK L. BENNARDO, P.E.
#PE0046549
LICENSE No. 46549
STATE OF FLORIDA
PROFESSIONAL ENGINEER
10/14/2014

ENGINEERING EXPRESS®
160 SW 12th AVENUE, #106
DEERFIELD BEACH, FL 33442
PH: (954) 354-0660 FAX: (954) 354-0443
WWW.ENGEXP.COM
CERT OF AUTH #9885
A FRANK L. BENNARDO, P.E., INC. INNOVATION

STANLEY
ACCESS TECHNOLOGIES
65 SCOTT SWAMP ROAD, FARMINGTON, CT 06032

SERIES "DURA-STORM 2000/3000"
REINF BI-PARTING AUTOMATIC SLIDING GLASS DOOR (LMI)
MIAMI-DADE NOTICE OF ACCEPTANCE

REMARKS	DRWN	CHKD	DATE
INIT. ISSUE	KL	FLB	07/01/12
REVIEWER COMMENT	KL	FLB	11/26/12
ADDL COMMENTS	KL	FLB	01/28/13
ADDL COMMENTS	KL	FLB	03/22/13
ADDL COMMENTS	KL	FLB	04/01/13
REV. PER TESTING	KL	FLB	05/17/13
ADDL COMMENTS	KL	FLB	08/07/13
REV. FBC 5TH EDITION	CSL	TSB	10/14/14

14-1855

SCALE:

PAGE DESCRIPTION:

DURA-STORM SERIES 2000/3000 EXTRUSIONS

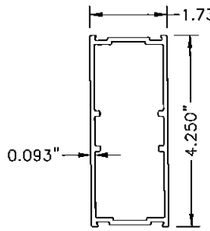

18 MUNTIN BAR
N.T.S. 6063-T6

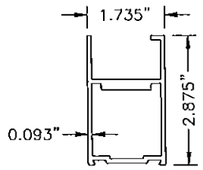

9 TOP RAIL, SX
N.T.S. 3000 6063-T6

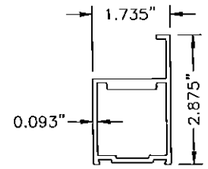

10 TOP RAIL, SX
N.T.S. 2000 6063-T6

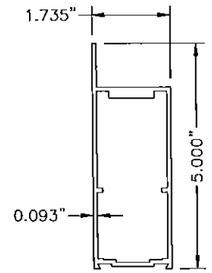

7 TOP RAIL, SO
N.T.S. 3000 6063-T6

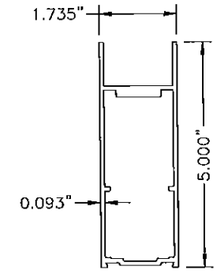

8 TOP RAIL, O
N.T.S. 2000 6063-T6

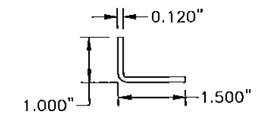

48 BRACKET
N.T.S. 6063-T6

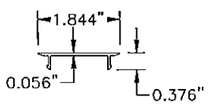

3 JAMB INSERT
N.T.S. 6063-T6

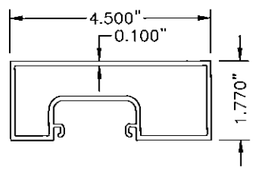

1 JAMB 4 1/2
N.T.S. 6063-T6

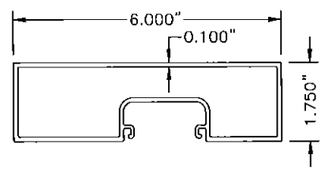

2 JAMB 6
N.T.S. 6063-T6

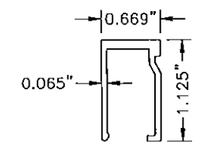

19 GLASS STOP
N.T.S. 6063-T6

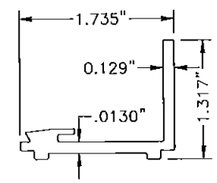

20 GUTTER
N.T.S. 6063-T6

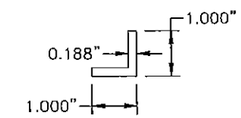

100 ANGLE
N.T.S. 6063-T6

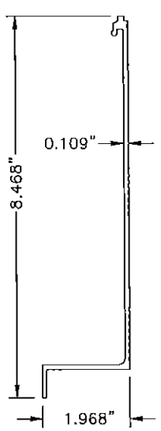

6 HEADER COVER
N.T.S. 6063-T6

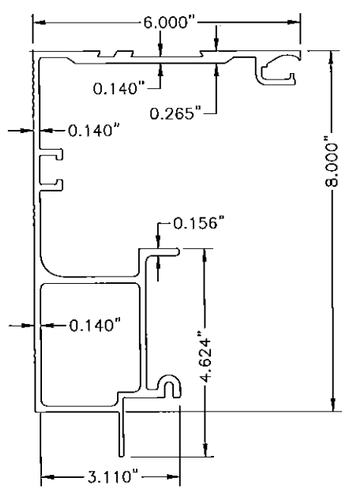

4 HEADER
N.T.S. 6063-T6

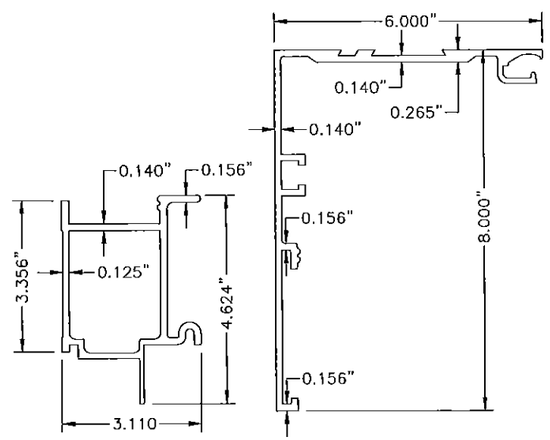

5 HEADER (2 PC.)
N.T.S. 6063-T6

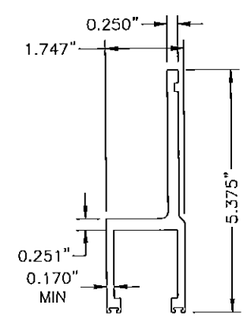

26 HANGER
N.T.S. 6063-T6

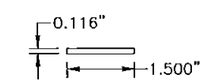

94 KEY STRIP
N.T.S. 6063-T6

PRODUCT REVISED
as complying with the Florida
Building Code
Acceptance No. 15-0127.06
Expiration Date 4/4/18
By Ishwar L. Uttamchandani
Miami Dade Product Control

FRANK L. BENNARDO, P.E.
LICENSE No. 46649
STATE OF FLORIDA
PROFESSIONAL ENGINEER
10/14/2014

ENGINEERING EXPRESS, INC.
160 SW 12th AVENUE, DEERFIELD BEACH, FL 33442
PH: (954) 354-0660 FAX: (954) 354-0443
WWW.ENGEXP.COM
CERT OF AUTH #9885
A. FRANK L. BENNARDO, P.E., INC. INNOVATION

STANLEY
ACCESS TECHNOLOGIES
65 SCOTT SWAMP ROAD, FARMINGTON, CT 06032

SERIES "DURA-STORM 2000/3000"
REINF BI-PARTING AUTOMATIC SLIDING GLASS DOOR (LMI)
MIAMI-DADE NOTICE OF ACCEPTANCE

REMARKS	DRWN	CHKD	DATE
INIT ISSUE	KL	FLB	07/01/12
REVIEWER COMMENT	KL	FLB	11/26/12
ADDL COMMENTS	KL	FLB	01/28/13
ADDL COMMENTS	KL	FLB	03/22/13
ADDL COMMENTS	KL	FLB	04/01/13
REV. PER TESTING	KL	FLB	05/17/13
ADDL COMMENTS	KL	FLB	08/07/13
REV. FBC 5TH EDITION	CSL	TSB	10/14/14

14-1855

SCALE:

PAGE DESCRIPTION:

DURA-STORM SERIES 2000/3000 EXTRUSIONS

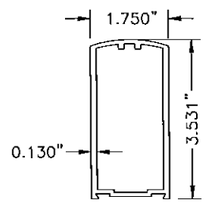

12 STILE LEAD
N.T.S. 6063-T6

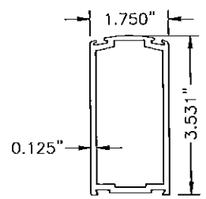

16 STILE LOCK
N.T.S. 6063-T6

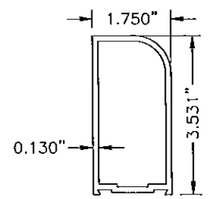

14 STILE PIVOT
N.T.S. 6063-T6

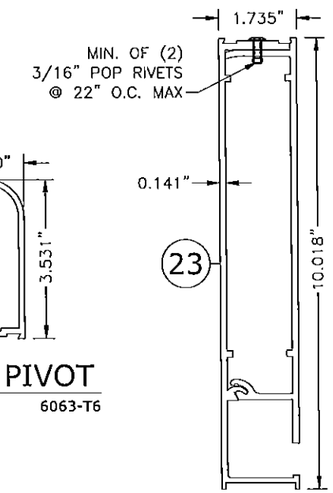

(SERIES 2000)
BOTTOM RAIL, O
N.T.S. 2-PIECE 6063-T6

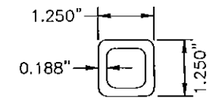

75 PANEL STIFFENER (STEEL)
N.T.S. ASTM A500, Fy = 46ksi

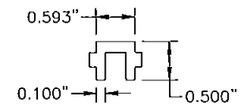

27 THRESHOLD FILLER
N.T.S. 6063-T6

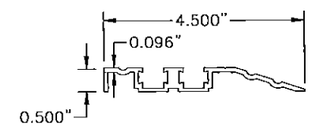

95 ALT THRESHOLD
N.T.S. 6063-T6

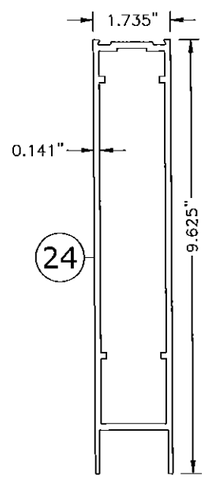

(SERIES 2000/3000)
BOTTOM RAIL, SX/SO
N.T.S. 1-PIECE 6063-T6

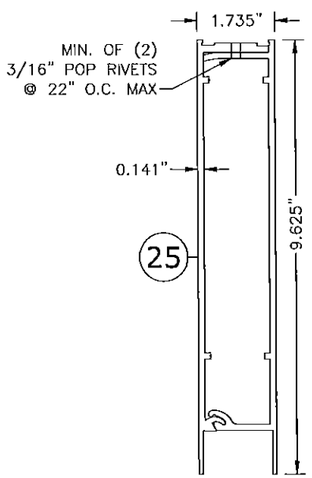

(SERIES 2000/3000)
BOTTOM RAIL, SX/SO
N.T.S. 2-PIECE 6063-T6

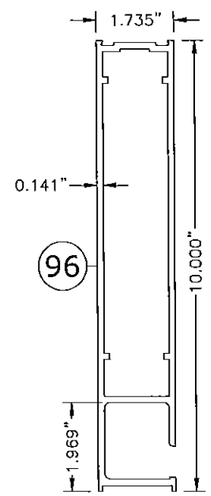

(SERIES 2000)
BOTTOM RAIL, O
N.T.S. 1-PIECE 6063-T6

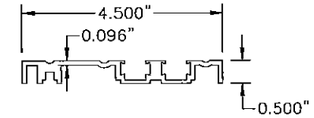

30 THRESHOLD
N.T.S. 6063-T6

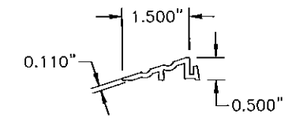

33 COMPONENT THRESHOLD
N.T.S. 6063-T6

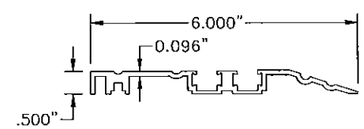

29 ALT THRESHOLD
N.T.S. 6063-T6

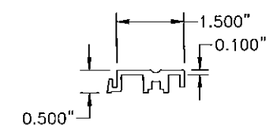

32 COMPONENT THRESHOLD
N.T.S. 6063-T6

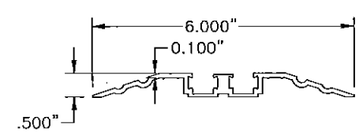

28 ALT THRESHOLD
N.T.S. 6063-T6

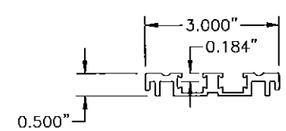

31 COMPONENT THRESHOLD
N.T.S. 6063-T6

PRODUCT REVISED
as complying with the Florida
Building Code
Acceptance No. 15-0127.06
Expiration Date 4/4/18
By [signature]
Miami Dade Product Control

FRANK L. BENNARDO LICENSE No. 46649 STATE OF FLORIDA PROFESSIONAL ENGINEER
FRANK L. BENNARDO, P.E.
#PE0046549
10/14/2014

ENGINEERING EXPRESS®
160 SW 12th AVENUE, #106
DEERFIELD BEACH, FL 33442
PH: (954) 354-0660 FAX: (954) 354-0443
WWW.ENGEXP.COM
CERT OF AUTH #9985
A. FRANK L. BENNARDO, P.E., INC. INNOVATION

STANLEY
ACCESS TECHNOLOGIES
65 SCOTT SWAMP ROAD, FARMINGTON, CT 06032

SERIES "DURA-STORM 2000/3000"
REINF BI-PARTING AUTOMATIC SLIDING GLASS DOOR (LMI)
MIAMI-DADE NOTICE OF ACCEPTANCE

REMARKS	DRWN	CHKD	DATE
INIT ISSUE	KL	FLB	07/01/12
REVIEWER COMMENT	KL	FLB	11/26/12
ADDL COMMENTS	KL	FLB	01/28/13
ADDL COMMENTS	KL	FLB	03/22/13
ADDL COMMNETS	KL	FLB	04/01/13
REV. PER TESTING	KL	FLB	05/17/13
ADDL COMMENTS	KL	FLB	08/07/13
REV. FBC 5TH EDITION	CSL	TSB	10/14/14

14-1855
SCALE:
PAGE DESCRIPTION:

DURA-STORM SERIES 2000/3000 DETAILS

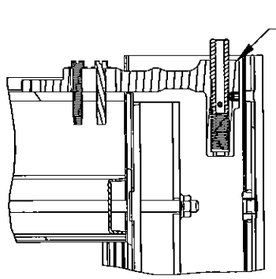

A SO PIVOT TOP
NTS SERIES 3000

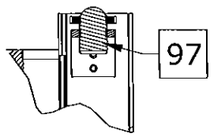

P SO PANEL BALL DETENT TOP
NTS SERIES 3000

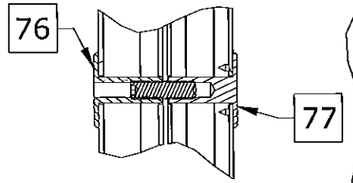

R SX/O WIND CLIP
NTS SERIES 2000

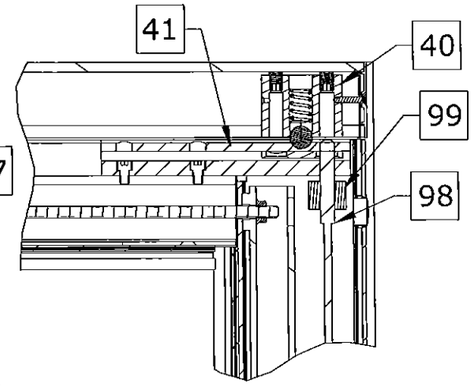

F STD BOLT TOP
NTS SERIES 2000/3000

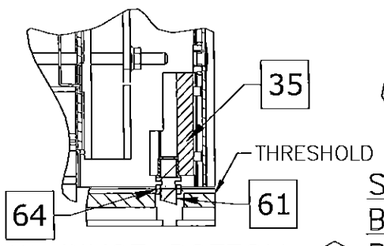

B SO PIVOT BOTTOM
NTS SERIES 3000

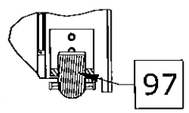

Q SO PANEL BALL DETENT BOTTOM
NTS SERIES 3000

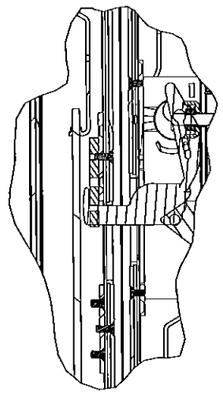

N LATCH DETAIL
NTS SERIES 2000/3000

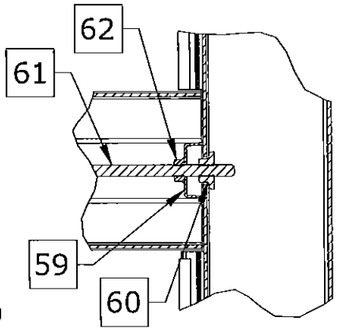

M MUNTIN DETAIL
NTS SERIES 2000/3000

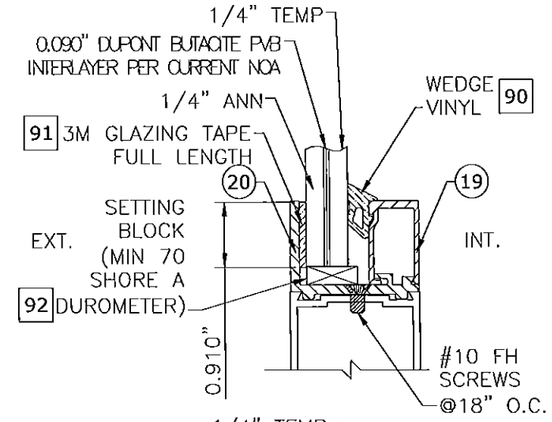

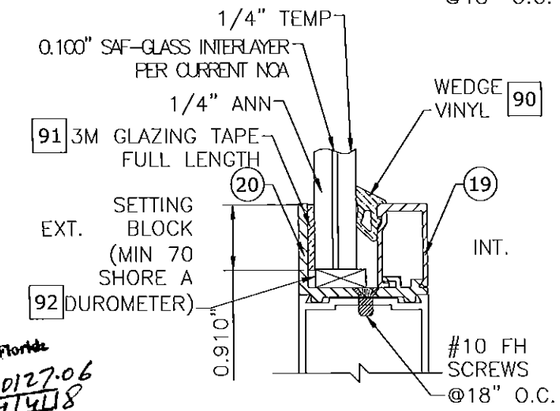

PRODUCT REVISED
as complying with the Florida
Building Code
Acceptance No. 15-0127.06
Expiration Date 4/4/18
By L. Chaub
Miami Dade Product Control

9/16" LAMINATED GLAZING DETAIL
NTS

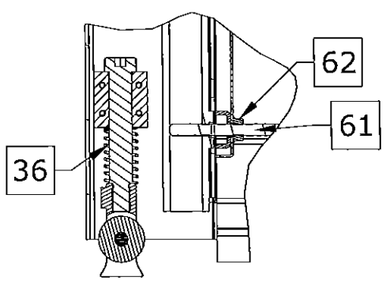

C SX GUIDE/PIVOT BOTTOM
NTS SERIES 3000

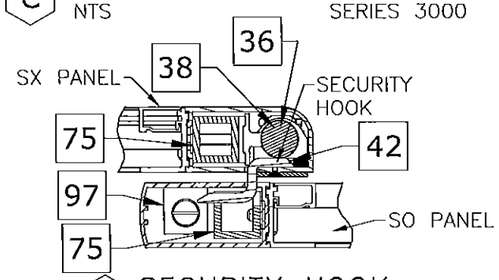

J SECURITY HOOK
NTS SERIES 3000
(SX-SO INTERLOCK)

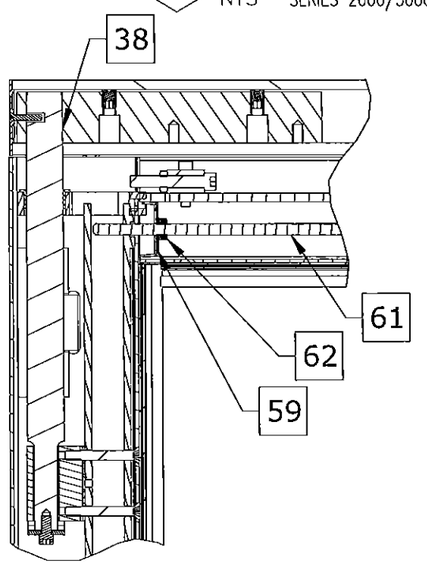

D SX PIVOT TOP
NTS SERIES 2000/3000

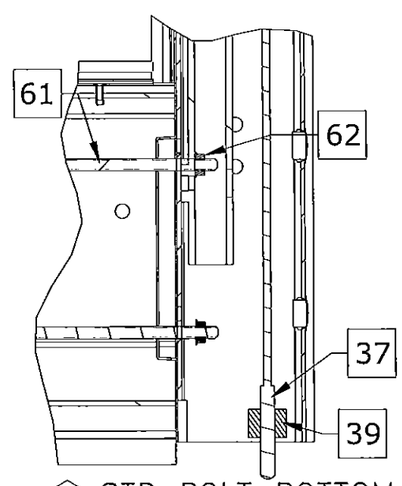

E STD BOLT BOTTOM
NTS SERIES 2000/3000

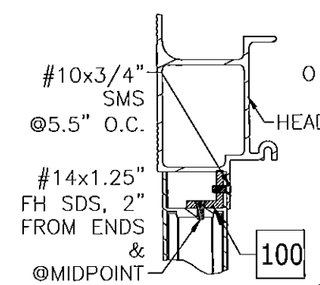

O O PANEL ANGLE
NTS SERIES 2000

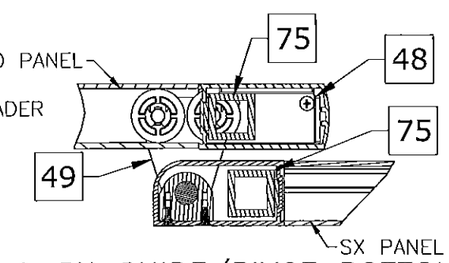

K SX GUIDE/PIVOT BOTTOM
NTS SERIES 2000
(O-SX INTERLOCK)

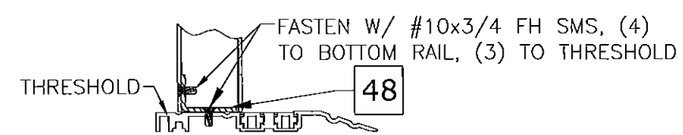

I O-PANEL BRACKET
NTS SERIES 2000

FRANK L. BENNARDO, P.E.
LICENSE NO. 46549
STATE OF FLORIDA
PROFESSIONAL ENGINEER
10/14/2014
ENGINEERING EXPRESS®
160 SW 12th AVENUE, #1014
DEERFIELD BEACH, FL 33442
Ph: (954) 354-0660 Fax: (954) 354-0443
WWW.ENGEXP.COM
CERT OF AUTH #9885
A FRANK L. BENNARDO, P.E., INC. INNOVATION

STANLEY
ACCESS TECHNOLOGIES
65 SCOTT SWAMP ROAD, FARMINGTON, CT 06032

SERIES "DURA-STORM 2000/3000"
REINF BI-PARTING AUTOMATIC SLIDING GLASS DOOR (LM1)
MIAMI-DADE NOTICE OF ACCEPTANCE

REMARKS	DRWN	CHKD	DATE
INIT ISSUE	KL	FLB	07/01/12
REVIEWER COMMENT	KL	FLB	11/26/12
ADD'L COMMENTS	KL	FLB	01/28/13
ADD'L COMMENTS	KL	FLB	03/22/13
ADD'L COMMNETS	KL	FLB	04/01/13
REV. PER TESTING	KL	FLB	05/17/13
ADD'L COMMENTS	KL	FLB	08/07/13
REV. FBC 5TH EDITION	CSL	TSB	10/14/14

14-1855

SCALE:

PAGE DESCRIPTION:

DURA-STORM SERIES 2000/3000 BILL OF MATERIALS

BILL OF MATERIALS	
REFERENCE	DESCRIPTION
1	Extrusion - Jamb - 4 1/2"
2	Extrusion - Jamb - 6"
3	Extrusion - Jamb - Insert
4	Extrusion - Header - 1 PC
5	Extrusion - Header - 2 PC
6	Extrusion - Header Cover -
7	Extrusion - Top Rail - SO
8	Extrusion - Top Rail - O
9	Extrusion - Top Rail - SX
10	Extrusion - Top Rail - SX
12	Extrusion - Stile - Lead
14	Extrusion - Stile - Pivot
16	Extrusion - Stile - Lock
18	Extrusion - Muntin Bar - 4.25"
19	Extrusion - Glass Stop -
20	Extrusion - Glass Gutter -
23	Extrusion - Bottom Rail O - 10" - 2 PC
24	Extrusion - Bottom Rail SX/SO - 1 PC - 10"
25	Extrusion - Bottom Rail SX/SO - 2 PC - 10"
26	Extrusion - Hanger -
27	Extrusion - Threshold - Filler
28	Extrusion - Threshold - Dbl bevel - 6"
29	Extrusion - Threshold - Sq/Bvl - 6"
30	Extrusion - Threshold - Recessed - 4.5"
31	Extrusion - Threshold - Core
32	Extrusion - Threshold - Square
33	Extrusion - Threshold - Bevel
34	Component - Top Pivot - SO - 3000
35	Component - Bottom Pivot - SO - 3000
36	Component - Bottom Guide - SX - 3000
37	Component - Throw Bolt - Std - Adams Rite 4015
38	Component - Top pivot - SX
39	Component - Guide - Throw Bolt - Adams Rite 4015

NON-CALL OUT PART #S 67-74, 78-89 ARE NOT PART OF BOM

BILL OF MATERIALS	
REFERENCE	DESCRIPTION
40	Component - Ball Detent - Std
41	Component - Detent Block - Std
42	Component - Security Hook - Std
48	Component - Bracket - O Panel
49	Component - Bottom Guide - SX - 2000
50	Component - Load Wheel - Steel/Aluminum/Plastic
51	Component - 2-PT Lock - Cylinder - Adams Rite 1870 Flushbolt, to be used with A.R. 4015 bottom bolt.
52	Component - 2-PT Lock - Thumb Turn - Adams Rite 1870 Flushbolt, to be used with A.R. 4015 bottom bolt.
53	Component - 8 Ply Hookbolt Lock - Single Action - Adams Rite MS1850S-050 (Deadbolt), Used w/ Adams Rite 4015 and 4016 Bolts
54	Component - Exit Indicator -
56	Component - Pile - Adhesive/non Adhesive backed
57	Component - Brush - Sweep
58	Component - Foam Block -
59	Hardware - Tie Rod - Plate
60	Hardware - Tie Rod - Nut - 5/16-18 - Steel
61	Hardware - Threaded Rod - 5/16-18 - Steel
62	Hardware - 5/16 - 18 - Nut - Steel
63	Hardware - Tie Rod / Rail - Plate - Steel
64	Hardware - 7/16-20 Jamb Nut - Steel
65	Hardware - 7/16 SO Pivot Pin - Steel
66	Hardware - 5/8-11 Nut - Steel
75	Steel Panel Reinforcing
76	Component - Lock Flange (Int) - "Wind Clip"
77	Component - Lock Flange (Ext) - "Wind Clip"
90	Glazing - Wedge Vinyl - RM270864 by Trelleborg
91	Glazing - 3M Tape -
92	Glazing - Setting Block -
94	Extrusion - Key Strip
95	Extrusion - Threshold - Sq/Bvl - 4.5"
96	Extrusion - Bottom Rail O - 10"
97	Component - Ball Detent - SO
98	Component - Throw Bolt - Std - Adams Rite 4016
99	Component - Guide - Throw Bolt - Adams Rite 4016
100	Extrusion - 1"x1"x3/16" Angle

PRODUCT REVISED
as complying with the Florida
Building Code
Acceptance No 15-0122.06
Expiration Date APR 04, 2018
By Ishaq I. Khan
Miami Dade Product Control

FRANK L. BENNARDO, P.E.
LICENSE No. 46549
STATE OF FLORIDA
PROFESSIONAL ENGINEER
10/14/2014

FRANK L. BENNARDO, P.E.
FL LIC#46549
ENGINEERING EXPRESS, INC.
160 SW 12th AVENUE, #106
DEERFIELD BEACH, FL 33442
PH: (954) 354-0660 FAX: (954) 354-0443
WWW.ENGEXP.COM
CERT OF AUTH #9885
A. FRANK L. BENNARDO, P.E., INC. INNOVATION

STANLEY
ACCESS TECHNOLOGIES
65 SCOTT SWAMP ROAD, FARMINGTON, CT 06032

SERIES "DURA-STORM 2000/3000"
REINF BI-PARTING AUTOMATIC SLIDING GLASS DOOR (LMI)
MIAMI-DADE NOTICE OF ACCEPTANCE

REMARKS	DRWN	CHKD	DATE
INIT ISSUE	KL	FLB	07/01/12
REVIEWER COMMENT	KL	FLB	11/26/12
ADDL COMMENTS	KL	FLB	01/28/13
ADDL COMMENTS	KL	FLB	03/22/13
ADDL COMMNETS	KL	FLB	04/01/13
REV. PER TESTING	KL	FLB	05/17/13
ADDL COMMENTS	KL	FLB	08/07/13
REV. FBC 5TH EDITION	CSL	TSB	10/14/14

14-1855

SCALE:

PAGE DESCRIPTION: