MIAMI-DADE COUNTY
PRODUCT CONTROL SECTION
11805 SW 26 Street, Room 208
Miami, Florida 33175-2474
T (786) 315-2590 F (786) 315-2599
www.miamidade.gov/economy

DEPARTMENT OF REGULATORY AND ECONOMIC RESOURCES (RER)
BOARD AND CODE ADMINISTRATION DIVISION

NOTICE OF ACCEPTANCE (NOA)

Stanley Security Solutions Inc.
6161 East 75th Street
Indianapolis, IN 46250

SCOPE:

This NOA is being issued under the applicable rules and regulations governing the use of construction materials. The documentation submitted has been reviewed and accepted by Miami-Dade County RER -Product Control Section to be used in Miami Dade County and other areas where allowed by the Authority Having Jurisdiction (AHJ).

This NOA shall not be valid after the expiration date stated below. The Miami-Dade County Product Control Section (In Miami Dade County) and/or the AHJ (in areas other than Miami Dade County) reserve the right to have this product or material tested for quality assurance purposes. If this product or material fails to perform in the accepted manner, the manufacturer will incur the expense of such testing and the AHJ may immediately revoke, modify, or suspend the use of such product or material within their jurisdiction. RER reserves the right to revoke this acceptance, if it is determined by Miami-Dade County Product Control Section that this product or material fails to meet the requirements of the applicable building code.

This product is approved as described herein, and has been designed to comply with the Florida Building Code, including the High Velocity Hurricane Zone.

DESCRIPTION: QDB Series Deadbolts w/ QCL <u>or</u> QTL Lever set Locking Hardware-Component Approval

APPROVAL DOCUMENT: Drawing No. **"SSS003" Rev B,** titled "Commercial Locking Hardware-Component Approval", sheets 1 through 17 of 17, prepared by Building Drops Inc., dated 06/22/2011 and last revised on 08-12-2015, signed and sealed by Hermes F. Norero, P.E., bearing the Miami-Dade County Product Control Revision stamp with the Notice of Acceptance number and expiration date by the Miami-Dade County Product Control Section.

MISSILE IMPACT RATING: Large Missile Impact Resistant

Limitations: 1. The locking 1" steel Deadbolt + ½" Steel latch component is approved to be used as an equal alternate in approved outswing **<u>single</u>** steel doors (48"W X 96"H max panel), having current NOA. Lower design of door or the component shall control.

2. Two (2) **single** doors with Min **5/16"** (0.3125") mullion NOA may be used, as long as the Dead bolts+ lever set engaged into opposite panel. The opposite panel containing Stanley QED Rim panic exit having current NOA must engage into the 5/16" mullion. Lowest design pressure of the doors or the locking component or panic exit component or mullion NOA(s) shall control.

3. The locking device is consists of QDB series Deadbolts **<u>plus</u>** either QCL or QTL series lever latch sets.

4. Electrical device installation is not part of this approval, such installation to be reviewed by AHJ

LABELING: Each unit shall bear a permanent label with the manufacturer's name or logo, Tonglong, Taiwan and Series and following statement: "Miami-Dade County Product Control Approved", unless otherwise noted herein.

RENEWAL of this NOA shall be considered after a renewal application has been filed and there has been no change in the applicable building code negatively affecting the performance of this product.

TERMINATION of this NOA will occur after the expiration date or if there has been a revision or change in the materials, use, and/or manufacture of the product or process. Misuse of this NOA as an endorsement of any product, for sales, advertising or any other purposes shall automatically terminate this NOA. Failure to comply with any section of this NOA shall be cause for termination and removal of NOA.

ADVERTISEMENT: The NOA number preceded by the words Miami-Dade County, Florida, and followed by the expiration date may be displayed in advertising literature. If any portion of the NOA is displayed, then it shall be done in its entirety.

INSPECTION: A copy of this entire NOA shall be provided to the user by the manufacturer or its distributors and shall be available for inspection at the job site at the request of the Building Official.

This NOA **revises NOA #13-0718.05** and consists of this page 1 and evidence pages E-1 & E-2, as well as approval document mentioned above.

The submitted documentation was reviewed by **Ishaq I. Chanda, P.E.**

MIAMI-DADE COUNTY APPROVED

10/22/15

NOTICE OF ACCEPTANCE: EVIDENCE SUBMITTED

A. DRAWINGS

1. Manufacturer's die drawings and sections (Submitted under files see below)
2. Drawing No. **"SSS003" Rev B,** titled "Commercial Locking Hardware-Component Approval", sheets 1 through 17 of 17, prepared by Building Drops Inc., dated 06/22/2011 and last revised on 08-12-2015, signed and sealed by Hermes F. Norero, P.E.

B. TESTS (Submitted under files **#13-0718.05 /#12-0612.26 /#11-0325.04)**

1. Test reports on: 1) Air Infiltration Test, per FBC, TAS 202-94
   2) Uniform Static Air Pressure Test, Loading per FBC TAS 202-94
   3) Water Resistance Test, per FBC, TAS 202-94
   4) Large Missile Impact Test per FBC, TAS 201-94
   5) Cyclic Wind Pressure Loading per FBC, TAS 203-94
   6) Forced Entry Test, per FBC 2411 3.2.1, TAS 202-94

   Along with marked-up drawings and installation diagram of Single steel doors w/ K2 locking hardware, prepared by Fenestration Testing lab, Inc., Test Report No. **FTL-6325**, dated 12/11/10, signed and sealed by Jorge A. Causo, P. E.
   (Note: This test report has been revised by addendum letters dated 05/26/11, 06/03/11 and August 10, 2011 along w/ verified marked-up Dwg of Rim exit & locking hardware w/ removable mullion, issued by Fenestration Testing Lab, all signed and sealed by Marlin D. Brinson, P.E.)

C. CALCULATIONS

1. Anchor verification calculations and structural analysis, complying with FBC 2014 (5th Edition), prepared by Building Drops Inc., dated 08-12-15, signed and sealed by Hermes F. Norero, P.E.

D. QUALITY ASSURANCE

1. Miami Dade Department of Regulatory and Economic Resources (RER).

E. MATERIAL CERTIFICATIONS

1. None.

F. STATEMENTS (items # 1, below submitted under files **above**)

1. Statement letter of conformance to FBC 2014(5th Edition) and letter of no financial interest, Building Drops Inc., dated 08/03/2015, signed and sealed by Hermes F. Norero, P.E.
2. Statement letter dated January 16th, 2014, issued by Stanley Blacker & Decker Inc., certifying on behalf of company that Stanley Security Solutions, Taiwan Ltd is wholly own subsidiary (through chain) of the Stanley Black & Decker company, signed by assistant secretary , Katy P. Sherer (Stanley Black & Decker).

Ishaq I. Chanda

Ishaq I. Chanda, P.E.
Product Control Examiner
NOA No. 15-0217.08
Expiration Date: August 18, 2016
Approval Date: October 29, 2015

NOTICE OF ACCEPTANCE: EVIDENCE SUBMITTED

F. STATEMENTS (items # 1, below submitted under files **above**)

3. Statement letter dated June 17th, 2011, issued by Stanley Blacker & Decker Inc., certifying that Tong Lung Metal Industry Co. Ltd merged into the Stanley Security Solutions, Taiwan, Ltd on January 01, 2013, signed by assistant secretary, Katy P. Sherer (Stanley Black & Decker).
4. Statement letter of conformance to FBC 2010 and letter of no financial interest, Building Drops Inc., dated 07/01/2013, signed and sealed by Hermes F. Norero, P.E. (submitted under files **#12-0612.26**)
5. Statement letter of Successor P.E. adopting work of another Engineer dated 11-28-12, per FL. Statue chapter 61G15-27, signed & sealed by Hermes F. Norero, P.E. (submitted under files **#12-0612.26**)
6. Certificate of Merger, issued by State of Indiana of merger of Precision Hardware Inc into surviving entity Stanley Security Solution Inc, dated May 04, 2007, signed by Todd Rokita, Secretary of State, Indiana.
7. Statement letter dated June 17th, 2011, issued by Stanley Blacker & Decker Inc., certifying on behalf of company that Stanley Security Solutions Inc. is wholly own subsidiary of the company, signed by assistant secretary, Katy P. Sherer (Stanley Blacker & Decker).
8. Statement of lab compliance, as part of test reports, along with addendum letters & marked-up Drawings, referenced above.

G. OTHER

1. This NOA **revises** NOA # **13-0718.05**, expiring on AUG. 18, 2016.
2. Test proposal # **10-0199 R**, dated 08-24-10 approved by BCCO.

Ishaq I. Chanda

Ishaq I. Chanda, P.E.
Product Control Examiner
NOA No. 15-0217.08
Expiration Date: August 18, 2016
Approval Date: October 29, 2015

STANLEY SECURITY SOLUTIONS, INC.

COMMERCIAL LOCKING HARDWARE - QDB SERIES DEADBOLTS WITH QCL & QTL SERIES LEVERSET

SEE SEPARATE DOOR/MULLION NOA(S) FOR CONSTRUCTION, DESIGN LOAD RATING AND INSTALLATION DETAILS. SEE MIN. DOOR REQUIREMENTS IN GENERAL NOTES.

GENERAL NOTES:

1. THIS PRODUCT HAS BEEN DESIGNED AND MANUFACTURED TO COMPLY WITH THE 5TH EDITION (2014) FLORIDA BUILDING CODE (FBC) INCLUDING PROVISIONS SET FORTH FOR HIGH-VELOCITY HURRICANE ZONES (HVHZ).
2. DOOR PANEL FACE SHEETS TO BE MIN. 18 GA. (0.045" MIN.) STEEL, FRAME JAMBS AND STRIKE PLATE TO BE MIN. 16 GA. (0.057" MIN.) STEEL. LOCK REINFORCEMENT PLATE TO BE MIN. 12 GA. STEEL. MULLION TO MIN. 11 GA. (0.120" MIN.) STEEL UNDER SEPARATE APPROVAL
3. STRIKES, HINGES, AND ALL APPLICABLE REINFORCEMENTS AS REQUIRED ON DETAIL DRAWING IN THIS APPROVAL.
4. LOCKING HARDWARE SHALL BE INSTALLED AS PER MANUFACTURER'S INSTALLATION INSTRUCTIONS.
5. ALL FASTENERS AND ASSOCIATED HARDWARE MUST BE MADE OF CORROSION RESISTANT MATERIAL OR HAVE A CORROSION RESISTANT COATING.
6. STEEL COMPONENTS SHALL BE COATED OR COMPLY WITH CORROSION RESISTANCE PROTECTION IN CONFORMANCE WITH REQUIREMENTS OF CHAPTER 22 OF THE FBC.

LIMITATIONS OF USE:

1. LOCKING HARDWARE (DEADBOLT & CYLINDRICAL LOCKSETS IS AN APPROVED COMPONENT TO BE USED AS AN EQUAL ALTERNATIVE TO THE CORRESPONDING APPROVED LOCKING DEVICES IN STEEL OUTSWING DOORS WITH 16 GA. (.057" MIN.) FRAME AND 18 GA. (0.045" MIN.) SINGLE STEEL DOORS, HAVING CURRENT NOA.
2. THE DOOR PANEL SHALL NOT BE WIDER THAN 48" OR HIGHER THAN 96"
3. TWO (2) SINGLE DOORS USING AN APPROVED MULLION (SEE MIN. SECTION PROPERTIES) CAN ALSO BE USED WITH LOCKING HARDWARE.
4. THE LOWER DESIGN PRESSURE OF COMPONENT HARDWARE OR DOOR OR MULLION (IF APPLICABLE) SHALL CONTROL FOR ENTIRE ASSEMBLY.
5. ELECTRICAL/ELECTRONIC FUNCTION AND INSTALLATION OTHER THAN SELF CONTAINED ELECTRONIC DEVICES ARE NOT PART OF THIS APPROVAL AND MUST BE REVIEWED BY AUTHORITY HAVING JURISDICTION(AHJ) IN THE AREA.
6. COMPLIANCE WITH BUILDING EGRESS REQUIREMENTS TO BE REVIEWED BY BUILDING OFFICIAL.

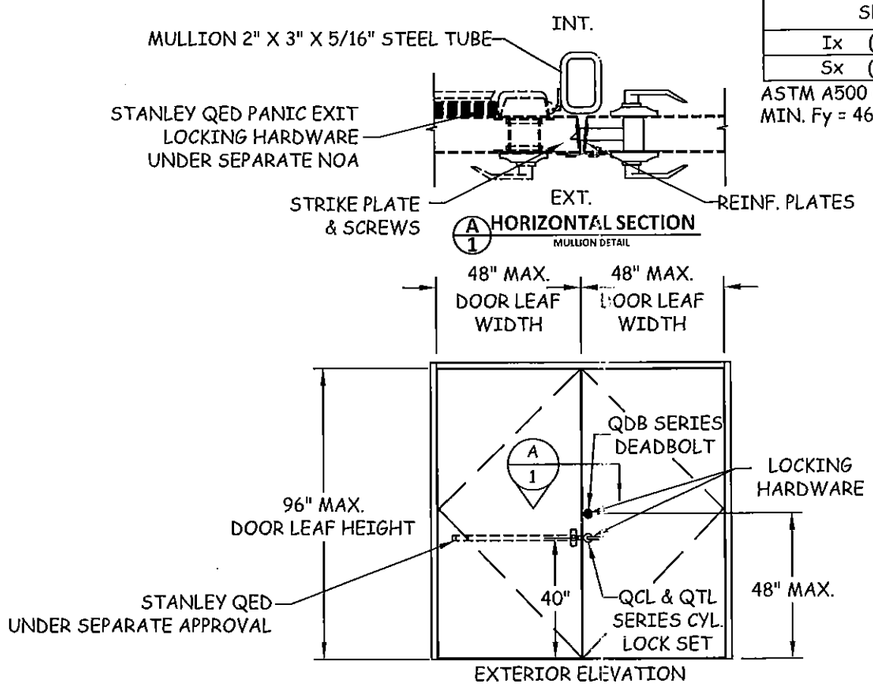

TWO SINGLE STEEL DOORS WITH INTERMEDIATE MULLION
DOORS & MULLION UNDER SEPARATE APPROVAL

MULLION SECTION PROPERTIES	
Ix (IN^4)	2.4457
Sx (IN^3)	1.6305

ASTM A500 GR. B OR BETTER
MIN. Fy = 46 KSI

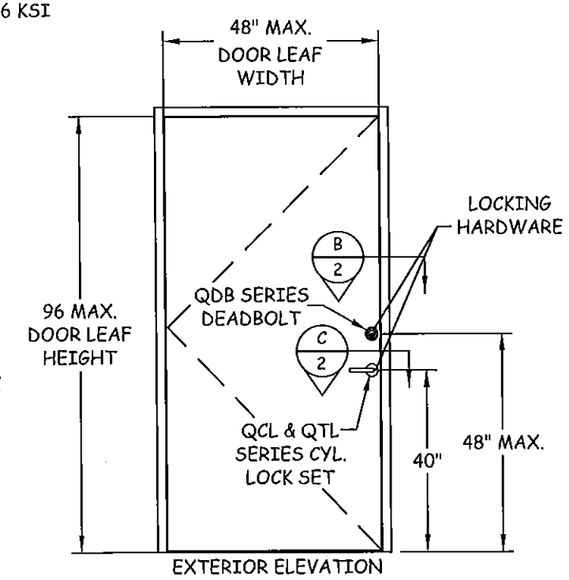

SINGLE STEEL DOOR
DOORS UNDER SEPARATE APPROVAL

TABLE OF CONTENTS

SHEET	REVISION	SHEET DESCRIPTION
1	B	GENERAL NOTES, ELEVATION, AND SECTION VIEW
2	A	SECTION VIEWS
3-5	A	QDB 100 SERIES, GRADE 1, AUX. DEADBOLTS
6-8	A	QDB 200 SERIES, GRADE 2, AUX. DEADBOLTS
9-11	A	QCL 100 SERIES, GRADE 1, CYLINDRICAL LEVERSET
12-14	A	QCL 200 SERIES, GRADE 2, CYLINDRICAL LEVERSETS
15-17	A	QTL 200 SERIES, GRADE 2, TUBULAR LEVERSET

STANLEY Security Solutions
6161 EAST 75TH STREET
INDIANAPOLIS, IN 46250
PH: (317) 806-3288
FX: (317) 806-3337

TITLE: COMMERCIAL LOCKING HARDWARE - COMP. APPROVAL GENERAL NOTES, ELEVATION, AND SECTION VIEWS

PREPARED BY:
BUILDING DROPS, INC.
398 E. DANIA BEACH BLVD. #338
DANIA BEACH, FL 33004
PH: (954) 399-8478 FX: (954) 744-4738

REVISIONS

NO.	DESCRIPTION	BY	DATE
A	REVISION PER M-D COMMENTS	MS	09.29.14
B	5TH EDITION FBC UPDATE	SM	01.30.15

HERMES F. NORERO, P.E.
FLORIDA P.E. NO. 73778
328 E. DANIA BEACH BLVD., #338
DANIA BEACH, FL 33004
CERTIFICATE OF AUTHORIZATION NO. 29578
8-12-2015

PRODUCT REVISED
as complying with the Florida Building Code
Acceptance No. 15-0217.08
Expiration Date AUG 18, 2016
Product Control

DATE: 6.22.11
DWN BY: MSS
CHK BY: HFN
SCALE: NTS
DWG #: SSS003
SHEET: 1 OF 17

s:\projects\stanley solutions\md-13-1202 noa 13-0718.05, 12-0612.27, 12-1002.35, 13-0718-03, 13-0178.04\rev.13-0718.05 - 15-0217.08 qdb series db w qcl or qtl\dwg\sss003 rev b2.dwg 7/31/2015 3:31 PM

NOTE: SEE APPROVED DOOR UNDER SEPARATE CURRENT NOA FOR DOOR ASSEMBLY, INSTALLATION AND DESIGN PRESSURE RATINGS, LOWER DESIGN PRESSURE OF LOCKING HARDWARE OR DOOR OR MULLION (IF APPLICABLE) SHALL CONTROL FOR ENTIRE ASSEMBLY.

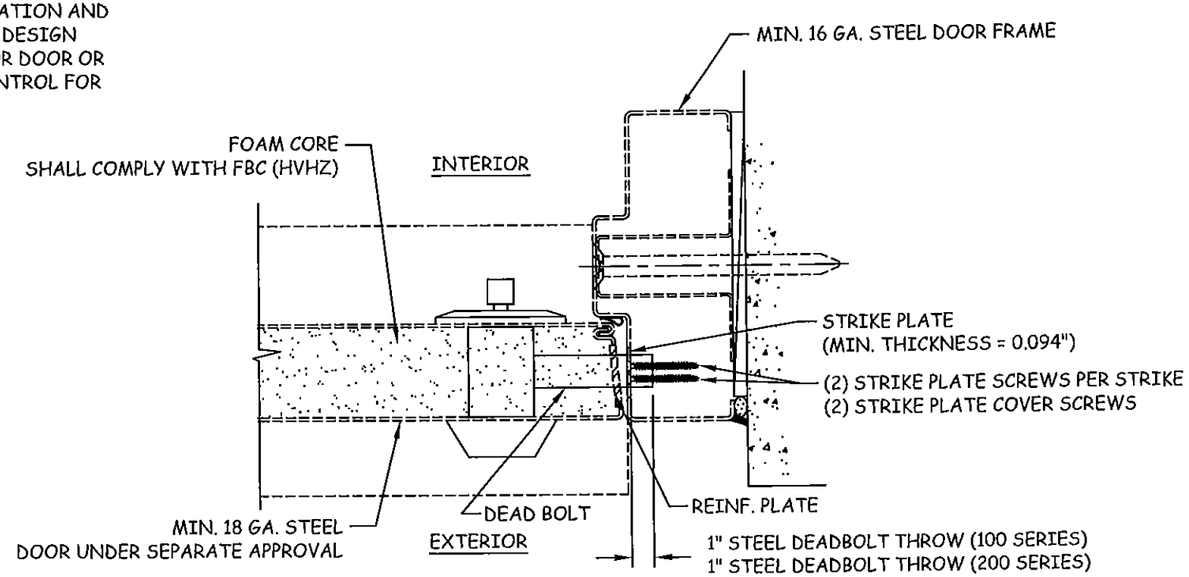

B/2 HORIZONTAL SECTION

QDB SERIES 100/200
DEADBOLT

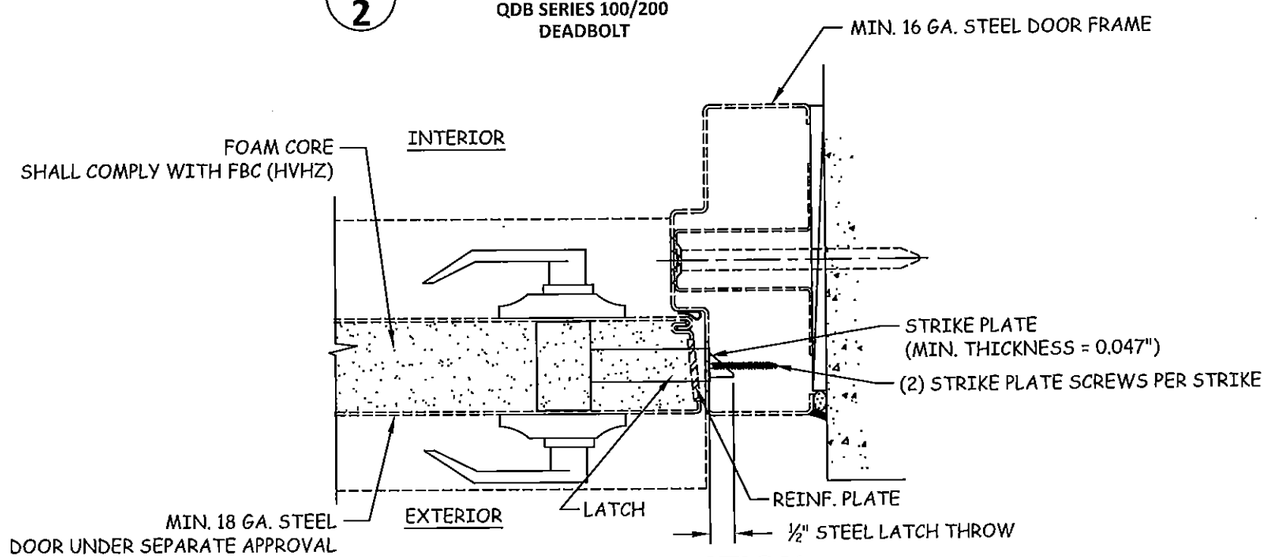

C/2 HORIZONTAL SECTION

QCL SERIES 100/200 OR QTL 200
LEVERSET

PRODUCT REVISED
to complying with the Florida
Building Code
Acceptance No. 15-0217.08
Expiration Date 8/18/16
By Ishaq I. Unnu
Miami Dade Product Control

STANLEY
Security Solutions
6161 EAST 75TH STREET
INDIANAPOLIS, IN 46250
PH: (317) 806-3288
FX: (317) 806-3337

TITLE: COMMERCIAL LOCKING HARDWARE - COMP. APPROVAL SECTION VIEWS

PREPARED BY:
BUILDING DROPS, INC.
398 E. DANIA BEACH BLVD. #338
DANIA BEACH, FL 33004
PH: (954) 399-8478 FX: (954) 744-4738

REVISIONS

NO.	DESCRIPTION	BY	DATE
A	REVISION PER M-D COMMENTS	MS	09.29.14

8-12-2015
HOMES & NORERO, P.E.
FLORIDA P. E. NO. 75776
398 E. DANIA BEACH BLVD. #338
DANIA BEACH, FLORIDA
FBPE CERT. OF AUTHORIZATION NO. 28578

DATE: 6.22.11
DWN BY: MSS
CHK BY: HFN
SCALE: NTS
DWG #: SSS003
SHEET: 2 OF 17

QDB 100 SERIES AUXILIARY DEADBOLTS TO BE USED WITH QCL SERIES 100/200 OR QTL SERIES 200 LEVERSET			
MAX. DESIGN PRESSURE RATING-PSF (48" WIDE X 96" HIGH SINGLE LEAF DOORS)			
HARDWARE MODEL (GRADE 1)	CONFIG.	EXT. (+)	INT. (-)
QDB 180 (SHOWN) QDB 181	SINGLE	75.0	75.0
QDB 182 QDB 183	TWO SINGLE W/ MULLION	65.0	65.0

NO	Component	Spec	Qty	Remark
1	Key	CU	2	
2	Single cylinder		1	
3	Outside rose maunting	brass forged	1	
4	Anti-pry	ZAMAK3	1	
5	Anti-Pry screw	steel	2	
6	Latch Casing	Brass with hardened steel pin	1	
7	Circular external rings	Ø9.7x12.6 0.4t	2	
8	Circular external rings	0.3t Ø14.5	1	
9	Inside rose hourting	steel	1	
10	Inside rose plate	CU. SUS 0.4t	1	
11	One way screw	10B21 #12-24 L=68	2	
12	Turn button	ZAMAK3	1	
13	#8 X 1-1/4" FH SCREWS	SAE GR. 5	2	
14	Strike plate	SUS 2.0t	1	
15	#8 X 3" FH SMS		2	
16	Strike plate cover	S45C3.0 heat-treatment	1	HRC30-35°
17	Dust box	POM	1	

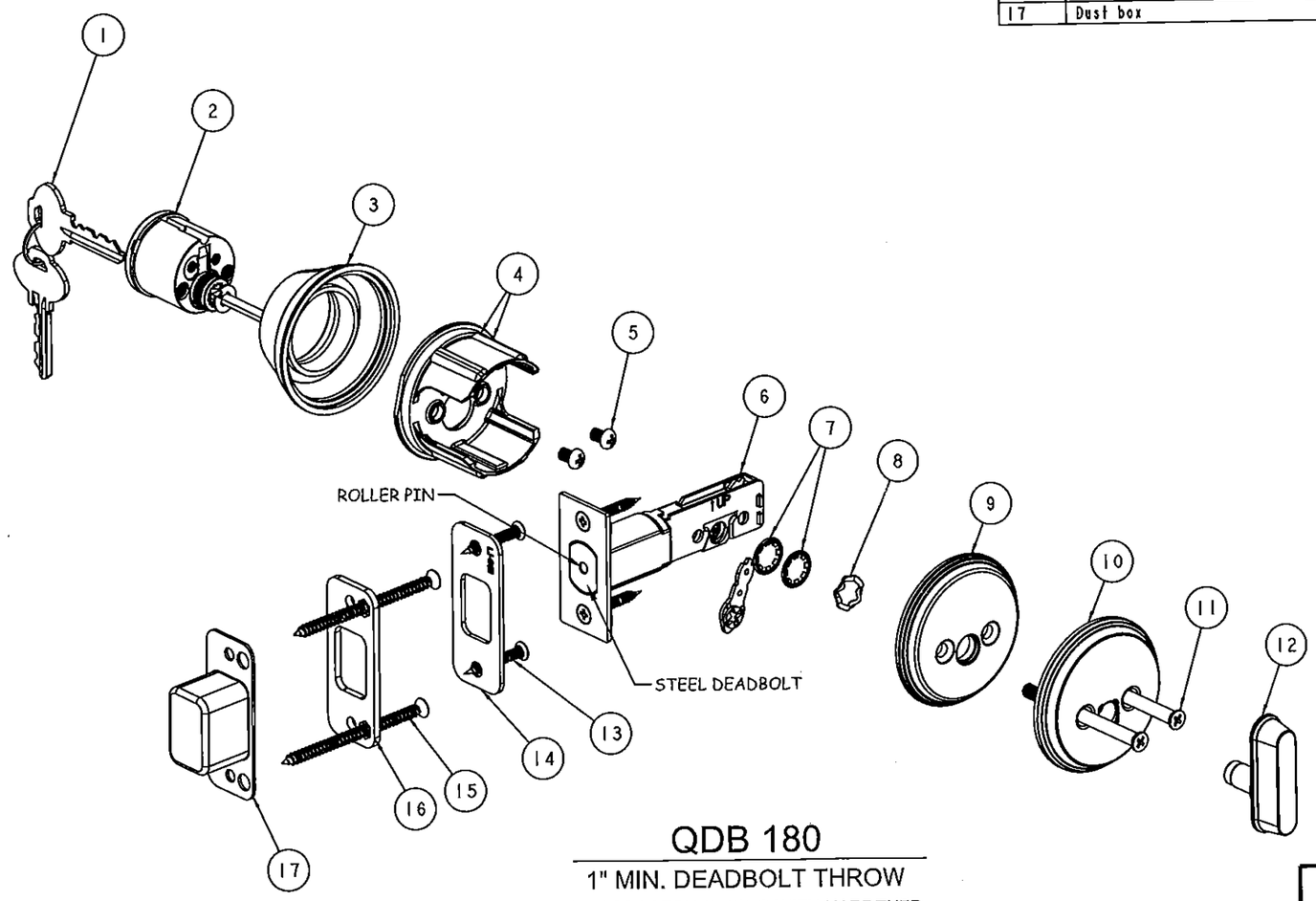

QDB 180

1" MIN. DEADBOLT THROW

(BRASS LATCH CASING WITH HARDENED STEEL ROLLER PIN)

PRODUCT REVISED
to complying with the Florida Building Code
Acceptance No. 15-0217.08
Expiration Date 8/18/16
Product Control

STANLEY
Security Solutions
6161 EAST 75TH STREET
INDIANAPOLIS, IN 46250
PH: (317) 806-3288
FX: (317) 806-3337

TITLE: COMMERCIAL LOCKING HARDWARE - COMP. APPROVAL
QDB 180

PREPARED BY:
BUILDING DROPS, INC.
398 E. DANIA BEACH BLVD. #338
DANIA BEACH, FL 33004
PH: (954) 399-8478 FX: (954) 744-4738

REVISIONS

NO.	DESCRIPTION	BY	DATE
A	REVISION PER M-D COMMENTS	MS	09.29.14

HERMES F. NORERO, P.E.
FLORIDA P. E. NO: 25778
398 E. DANIA BEACH BLVD. #338
DANIA BEACH, FL 33004
CERT. OF AUTHORIZATION NO. 28678

8-12-2015

DATE: 6.22.11
DWN BY: MSS
CHK BY: HFN
SCALE: NTS
DWG #: SSS003
SHEET: 3 OF 17

QDB 100 SERIES AUXILIARY DEADBOLTS

TO BE USED WITH
QCL SERIES 100/200 OR QTL SERIES 200 LEVERSET

MAX. DESIGN PRESSURE RATING-PSF

(48" WIDE X 96" HIGH SINGLE LEAF DOORS)

HARDWARE MODEL (GRADE 1)	CONFIG.	EXT. (+)	INT. (-)
QDB 180 QDB 181 (SHOWN) QDB 182 QDB 183	SINGLE	75.0	75.0
	TWO SINGLE W/ MULLION	65.0	65.0

NO	Component	Spec	Qty	Remark
1	Key	CU	3	
2	Single cylinder		1	
3	Outside rose maunting	brass forged	1	
4	Anti-pry	ZAMAK3	1	
5	Anti-Pry screw	steel	2	
6	Latch Casing	Brass with hardened steel pin	1	
7	Circular external rings	spring steel Ø15.4	2	
8	Circular external rings	spring steel 0.3t Ø14.5	1	
9	Inside rose hourting	steel	1	
10	Inside rose plate	cu. sus 0.4t	1	
11	One way screw	35ACR #12-24 L=68	2	
12	Turn button	ZAMAK3	1	
13	#8 X 1-1/4" FH SCREWS	SAE GR. 5	2	
14	Strike plate	SUS 2.0t	1	
15	#8 X 3" FH SMS		2	
16	Strike plate cover	S45C3.0 heat-treatment	1	HRC30-35°
17	Dust box	POM	1	

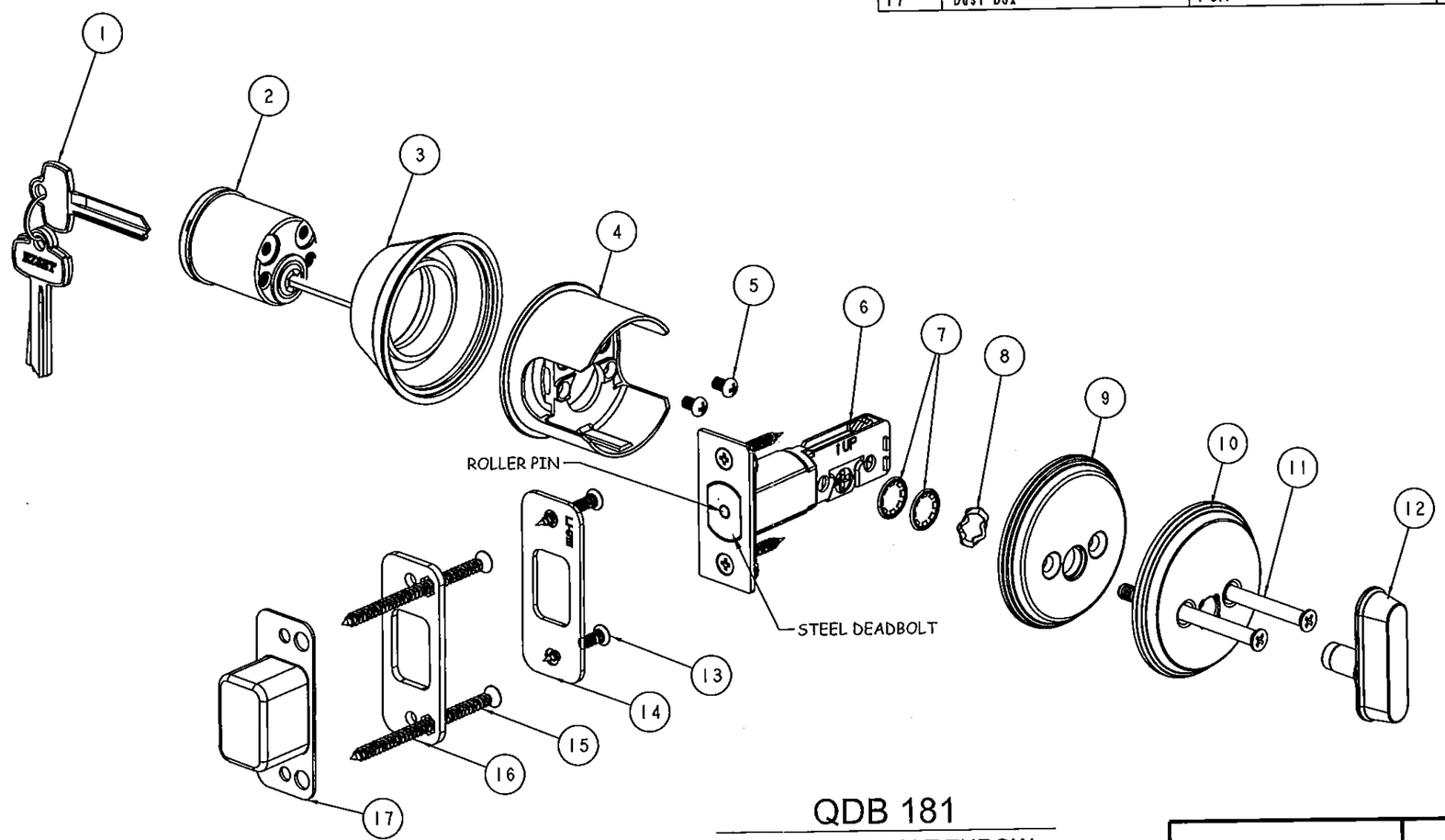

QDB 181

1" MIN. DEADBOLT THROW
(BRASS LATCH CASING WITH HARDENED STEEL ROLLER PIN)

PRODUCT REVISED
to complying with the Florida Building Code
Acceptance No 15-0217.08
Expiration Date 8/18/16
Product Control

STANLEY
Security Solutions
6161 EAST 75TH STREET
INDIANAPOLIS, IN 46250
PH: (317) 806-3288
FX: (317) 806-3337

TITLE: COMMERCIAL LOCKING HARDWARE - COMP. APPROVAL
QDB 181

PREPARED BY:
BUILDING DROPS, INC.
398 E. DANIA BEACH BLVD. #338
DANIA BEACH, FL 33004
PH: (954) 399-8478 FX: (954) 744-4738

REVISIONS

NO.	DESCRIPTION	BY	DATE
A	REVISION PER M-D COMMENTS	MS	09.29.14

6-12-2015
HECTOR F. NORERO, P.E.
FLORIDA P. E. NO. 75776
398 E. DANIA BEACH BLVD. #330
DANIA BEACH, FL 33004
FBPE CERT. OF AUTHORIZATION NO. 28978

DATE: 6.22.11
DWN BY: MSS
CHK BY: HFN
SCALE: NTS

DWG #: SSS003

SHEET: 4 OF 17

QDB 100 SERIES AUXILIARY DEADBOLTS

TO BE USED WITH
QCL SERIES 100/200 OR QTL SERIES 200 LEVERSET

MAX. DESIGN PRESSURE RATING-PSF

(48" WIDE X 96" HIGH SINGLE LEAF DOORS)

HARDWARE MODEL (GRADE 1)	CONFIG.	EXT. (+)	INT. (-)
QDB 180 QDB 181 QDB 182 (SHOWN) QDB 183	SINGLE	75.0	75.0
	TWO SINGLE W/ MULLION	65.0	65.0

NO	Component	Spec	Qty	Remark
1	key		2	
2	Double outsidr cylinder		1	
3	Outside rose mounting	brass forged	2	
4	Anti-pry	ZAMAK	1	
5	Anti-Pry screw	steel	3	
6	Latch Casing	Brass with hardened steel pin	1	
7	washer	SPCC 1.2t	1	
8	Double inside cylinder		1	
9	Double installation screw	35ACR 12*24 L=83	2	
10	#8 X 1-1/4" FH SCREWS	SAE GR. 5	2	
11	Strike plate	SUS 2.0t	1	
12	Strike plate cover	S45C3.0t heat-treatment	1	HRC30-35°
13	#8 X 3" FH SMS		2	
14	Strike box	POM	1	

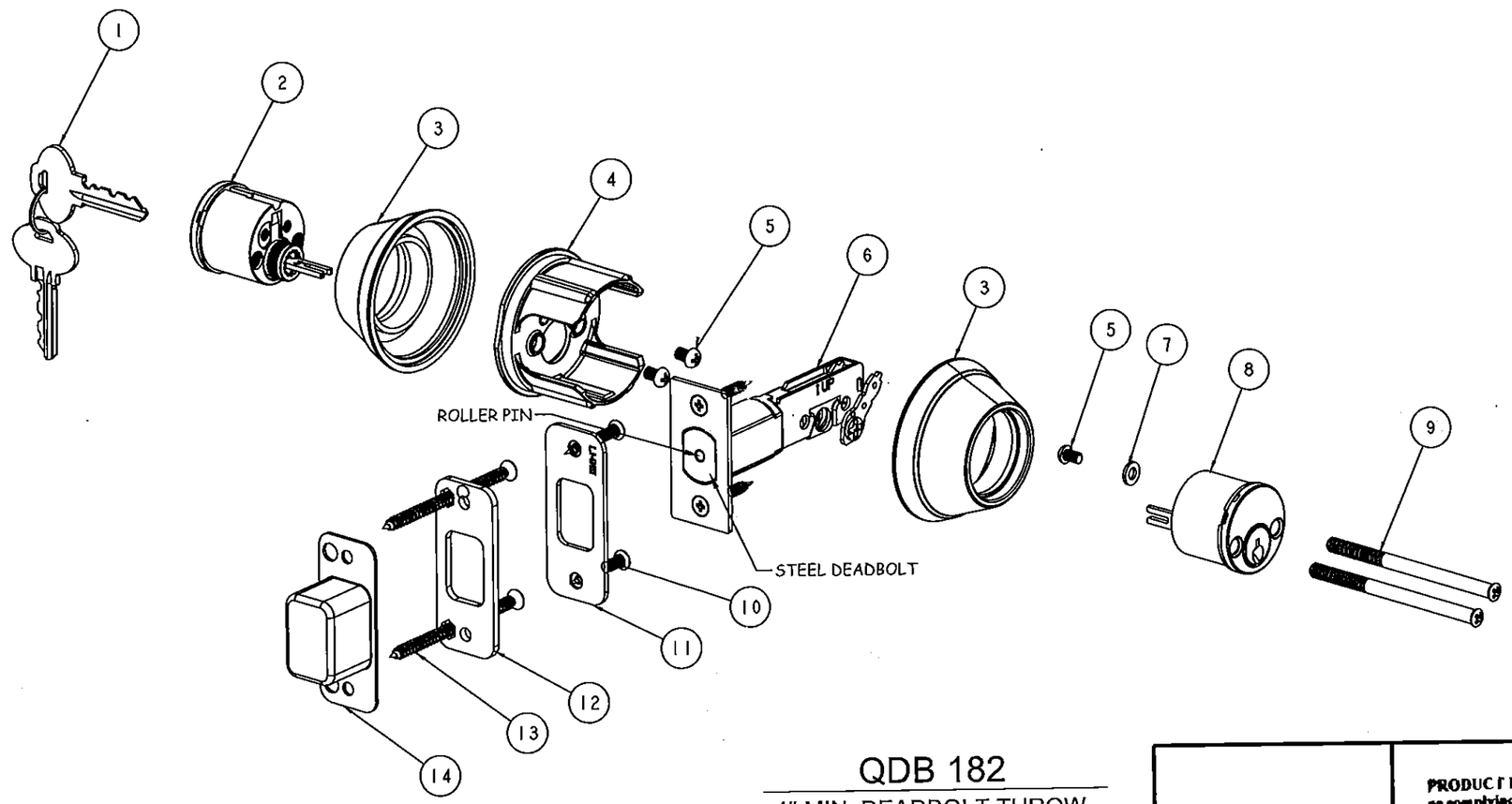

QDB 182

1" MIN. DEADBOLT THROW

(BRASS LATCH CASING WITH HARDENED STEEL ROLLER PIN)

PRODUCT REVISED
as complying with the Florida Building Code
Acceptance No. 15-0217.08
Expiration Date 8/18/16
By
National State Product Control

STANLEY
Security Solutions
6161 EAST 75TH STREET
INDIANAPOLIS, IN 46250
PH: (317) 806-3288
FX: (317) 806-3337

TITLE: COMMERCIAL LOCKING HARDWARE - COMP. APPROVAL
QDB 182

PREPARED BY:
BUILDING DROPS, INC.
398 E. DANIA BEACH BLVD. #338
DANIA BEACH, FL 33004
PH: (954) 399-8478 FX: (954) 744-4738

REVISIONS

NO.	DESCRIPTION	BY	DATE
A	REVISION PER M-D COMMENTS	MS	09.29.14

8-12-2015
HERKLES F. MORGENO, P.E.
FLORIDA P.E. NO. 73778
236 E. DANIA BEACH BLVD. #338
DANIA BEACH, FL 33004
FBPE CERT. OF AUTHORIZATION NO. 29578

DATE:	DWN BY:	CHK BY:	SCALE:
6.22.11	MSS	HFN	NTS

DWG #: SSS003

SHEET: 5 OF 17

QDB 200 SERIES AUXILIARY DEADBOLTS TO BE USED WITH QCL SERIES 100/200 OR QTL SERIES 200 LEVERSET			
MAX. DESIGN PRESSURE RATING-PSF (48" WIDE X 96" HIGH SINGLE LEAF DOORS)			
HARDWARE MODEL (GRADE 2)	CONFIG.	EXT. (+)	INT. (-)
QDB 280 (SHOWN) QDB 281 QDB 282 QDB 283 QDB 284	SINGLE	75.0	75.0
	TWO SINGLE W/ MULLION	65.0	65.0

NO	Component	Spec	Qty	Remark
1	Key	CU	2	
2	Single cylinder		1	
3	Outside protect sleeve	CU SUS 0.4t	1	
4	Inside protect sleeve	steel forged	1	
5	Anti-pry	ZAMAK3	1	
6	Anti-Pry screw	steel	2	
7	Latch Casing	Brass with hardened steel pin	1	
8	Circular external rings	spring steel∅9.7x12.6 0.4t	2	
9	Wave wash	spring steel0.3t∅14.5	2	
10	Inside support plate	SPCC2.0 63.9	1	
11	Inside rose plate	SPCC 1.2t	1	
12	Inside rose	0.4t	1	
13	One way screw	10B21 #12-24 L=68	2	
14	Turn button	ZAMAK3	1	
15	#8 X 1-1/4" FH SCREWS	SAE GR. 5	2	
16	Strike plate	SPCC 2.0t	1	
17	#8 X 3" FH SMS		2	
18	Strike plate cover	S45C3.0 heat-treatment	1	HRC30-35°
19	Dust box	POM	1	

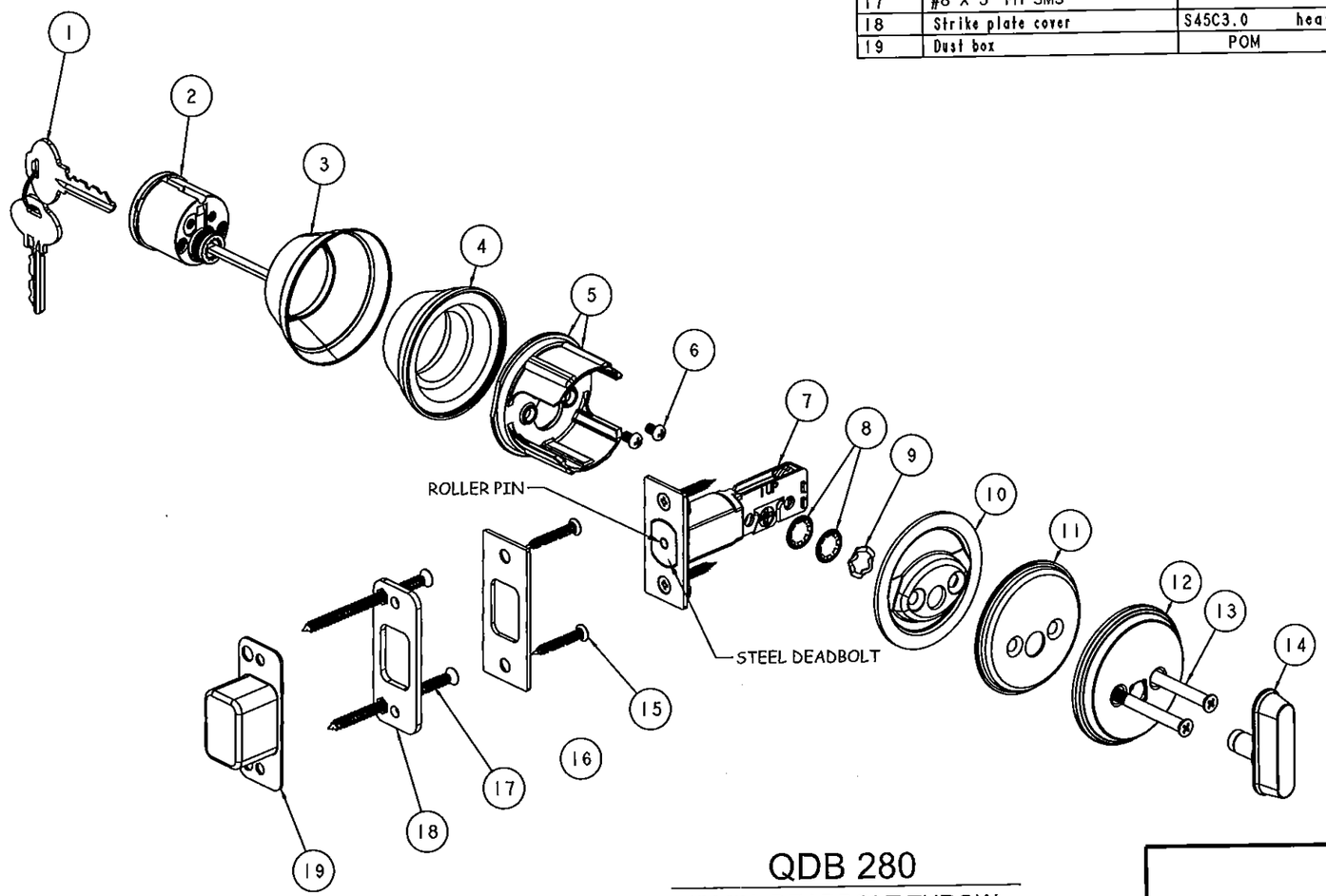

QDB 280

1" MIN. DEADBOLT THROW

(BRASS LATCH CASING WITH HARDENED STEEL ROLLER PIN)

PRODUCT REVISED
no complying with the Florida Building Code
Acceptance No. 15-0217.08
Expiration Date 8/18/16
Miami-Dade Product Control

STANLEY
Security Solutions
6161 EAST 75TH STREET
INDIANAPOLIS, IN 46250
PH: (317) 806-3288
FX: (317) 806-3337

TITLE: COMMERCIAL LOCKING HARDWARE - COMP. APPROVAL QDB 280

PREPARED BY:
BUILDING DROPS, INC.
398 E. DANIA BEACH BLVD. #338
DANIA BEACH, FL 33004
PH: (954) 399-8478 FX: (954) 744-4738

REVISIONS

NO.	DESCRIPTION	BY	DATE
A	REVISION PER M-D COMMENTS	MS	09.29.14

8-12-2015
HERMES F. NORERO, P.E.
FLORIDA P.E. NO. 73778
398 E. DANIA BEACH BLVD., #335
DANIA BEACH, FL 33004
FBPE CERT. OF AUTHORIZATION NO. 28573

DATE: 6.22.11	DWN BY: MSS	CHK BY: HFN	SCALE: NTS

DWG #: SSS003

SHEET: 6 OF 17

QDB 200 SERIES AUXILIARY DEADBOLTS

TO BE USED WITH
QCL SERIES 100/200 OR QTL SERIES 200 LEVERSET

MAX. DESIGN PRESSURE RATING-PSF

(48" WIDE X 96" HIGH SINGLE LEAF DOORS)

HARDWARE MODEL (GRADE 2)	CONFIG.	EXT. (+)	INT. (-)
QDB 280 QDB 281 (SHOWN) QDB 282 QDB 283 QDB 284	SINGLE	75.0	75.0
	TWO SINGLE W/ MULLION	65.0	65.0

NO	Component	Spec	Qty	Remark
1	Key	CU	3	
2	Double outsidr cylinder		1	
3	Outside protect sleeve	CU SUS 0.4t	2	
4	Inside protect sleeve	steel forged	2	
5	Anti-pry	ZAMAK	1	
6	Anti-Pry screw	steel	2	
7	Outside washer maunting	SUS CU 0.6t	2	
8	Latch Casing	Brass with hardened steel pin	1	
9	Double inside cylinder		1	
10	Double installation screw	35ACR 12*24 L=83	2	
11	#8 X 1-1/4" FH SCREWS	SAE GR. 5	4	
12	Strike plate	SPCC 2.0t	1	
13	#8 X 3" FH SMS		2	
14	Strike plate cover	S45C 3.0t heat-treatment	1	HRC30-35°
15	Dust box	POM	1	

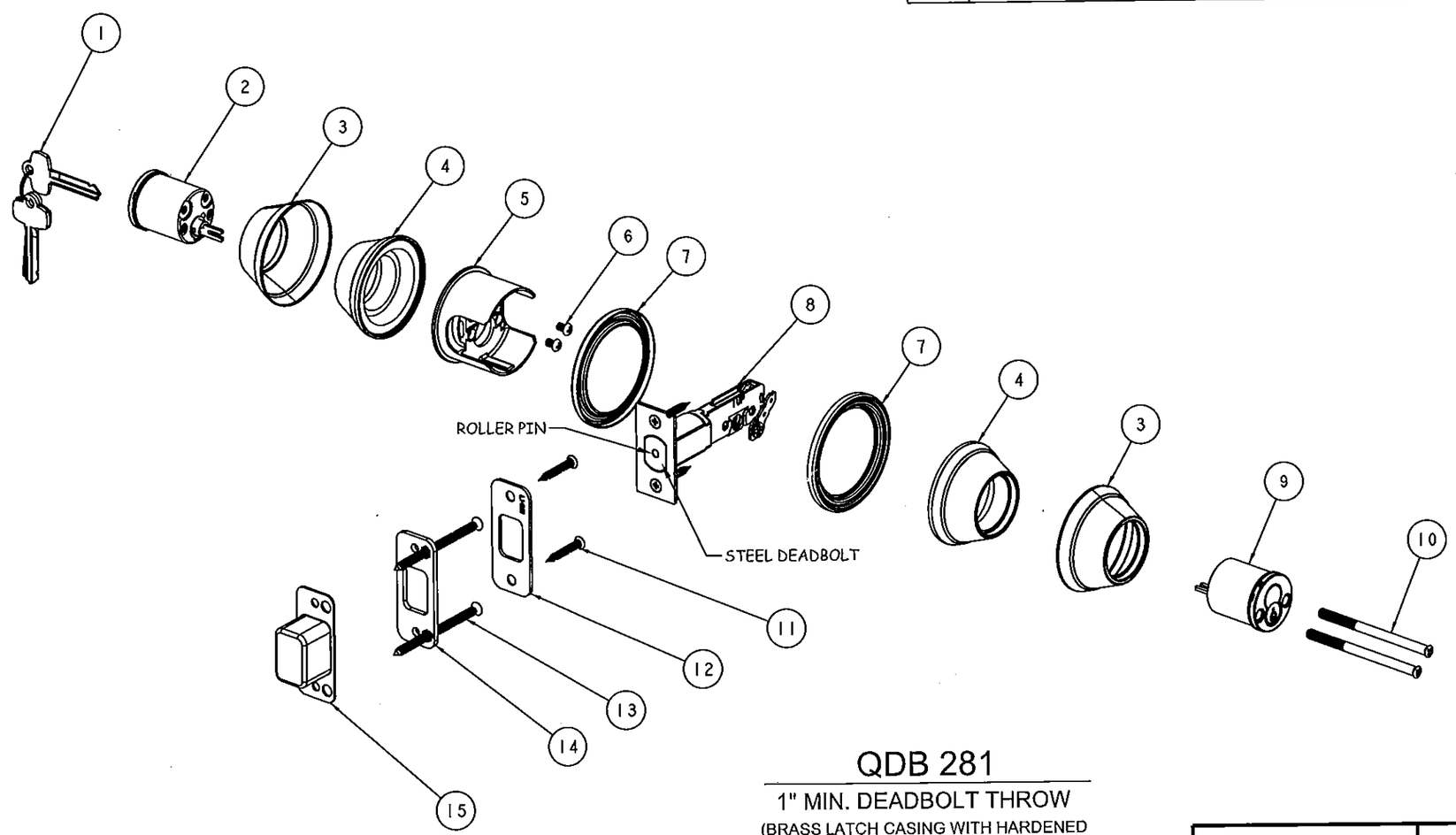

QDB 281

1" MIN. DEADBOLT THROW

(BRASS LATCH CASING WITH HARDENED STEEL ROLLER PIN)

PRODUCT REVISED
to complying with the Florida Building Code
Acceptance No 15-0217.08
Expiration Date 8/18/16
Miami-Dade Product Control

STANLEY
Security Solutions
6161 EAST 75TH STREET
INDIANAPOLIS, IN 46250
PH: (317) 806-3288
FX: (317) 806-3337

TITLE: COMMERCIAL LOCKING HARDWARE - COMP. APPROVAL
QDB 281

PREPARED BY:
BUILDING DROPS, INC.
398 E. DANIA BEACH BLVD. #338
DANIA BEACH, FL 33004
PH: (954) 399-8478 FX: (954) 744-4738

REVISIONS

NO.	DESCRIPTION	BY	DATE
A	REVISION PER M-D COMMENTS	MS	09.29.14

8-12-2015
HERMES F. NORDO, P.E.
FLORIDA P. E. NO. 73776
368 S. DANIA BEACH BLVD. #338
DANIA BEACH, FLORIDA 33004
FBPE CERT. OF AUTHORIZATION NO. 29578

DATE: 6.22.11	DWN BY: MSS	CHK BY: HFN	SCALE: NTS

DWG #: SSS003

SHEET: 7 OF 17

QDB 200 SERIES AUXILIARY DEADBOLTS

TO BE USED WITH
QCL SERIES 100/200 OR QTL SERIES 200 LEVERSET

MAX. DESIGN PRESSURE RATING-PSF

(48" WIDE X 96" HIGH SINGLE LEAF DOORS)

HARDWARE MODEL (GRADE 2)	CONFIG.	EXT. (+)	INT. (-)
QDB 280 QDB 281 QDB 282 (SHOWN) QDB 283 QDB 284	SINGLE	75.0	75.0
	TWO SINGLE W/ MULLION	65.0	65.0

NO	Component	Spec	Qty	Remark
1	Key	CU	2	
2	Double outsidr cylinder		1	
3	Outside protect sleeve	SUS CU 0.4t	2	
4	Inside protect sleeve	steel forged	1	
5	Anti-pry	ZAMAK	1	
6	Anti-Pry screw	steel	3	
7	Latch Casing	Brass with hardened steel pin	1	
8	wash	SPCC 1.2t	1	
9	Double installation screw		1	
10	Double installation screw	35ACR 12*24 L=83	2	
11	#8 X 1-1/4" FH SCREWS	SAE GR. 5	2	
12	Strike plate	SPCC 2.0t	1	
13	Strike plate cover	S45C3.0t heat-treatment	1	HRC30-35°
14	#8 X 3" FH SMS		2	
15	Dust box	POM	1	

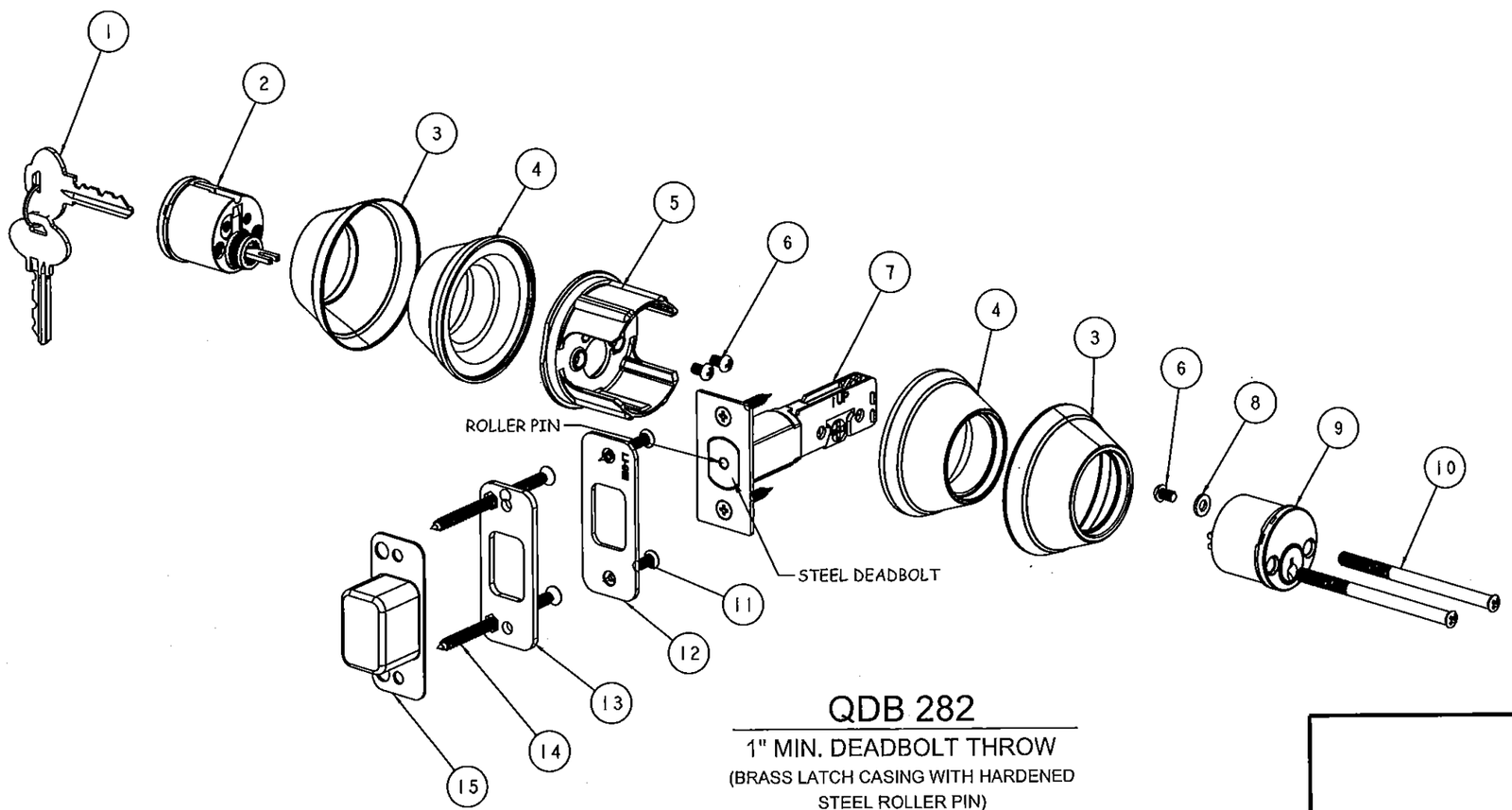

QDB 282

1" MIN. DEADBOLT THROW

(BRASS LATCH CASING WITH HARDENED STEEL ROLLER PIN)

PRODUCT REVISED
to complying with the Florida
building Code
Acceptance No. 15-0217.08
Expiration Date 8/18/16
By
Miami-Dade Product Control

STANLEY
Security Solutions
6161 EAST 75TH STREET
INDIANAPOLIS, IN 46250
PH: (317) 806-3288
FX: (317) 806-3337

TITLE: COMMERCIAL LOCKING HARDWARE - COMP. APPROVAL QDB 282

PREPARED BY:
BUILDING DROPS, INC.
398 E. DANIA BEACH BLVD. #338
DANIA BEACH, FL 33004
PH: (954) 399-8478 FX: (954) 744-4738

REVISIONS

NO.	DESCRIPTION	BY	DATE
A	REVISION PER M-D COMMENTS	MS	09.29.14

HERMES F. IRONEO, P.E.
FLORIDA P.E. NO. 72775
356 E. DANIA BEACH BLVD. #338
DANIA BEACH, FL 33004
FBPE CERT. OF AUTHORIZATION NO: 29578

8-12-2015

DATE: 6.22.11	DWN BY: MSS	CHK BY: HFN	SCALE: NTS

DWG #: SSS003

SHEET: 8 OF 17

QCL 100 SERIES CYLINDRICAL LEVERS

TO BE USED WITH
QDB SERIES 100/200 DEADBOLTS

HARDWARE MODEL (GRADE 1)
QCL 120
QCL 130 (SHOWN)
QCL 135
QCL 140
QCL 150
QCL 151
QCL 160
QCL 161
QCL 170
QCL 171

No	COMPONENT	SPEC	Q'TY	REMARK
1	PASSAGE LEVER	ZINC ALLOY	2	
2	#82 LOCK CHASSIS		1	
3	#82 LATCH (Spring Loaded)	304 PM STEEL	1	
4	SCREW	#12-24UNCx23.8	2	SAE GR. 5
5	SCREW	#8x3/4	2	
6	ROSE	CU,SUS 0.5t	2	
7	INSIDE MOUNTING PLATE	SPCC 2.0t	1	
8	OUTSIDE MOUNTING PLATE	SPCC 2.0t	1	
9	FIXED PIN	STEEL	2	
10	SUPPORTING NUT	STEEL	2	
11	OUTSIDE ROSE PLATE	SPCC 2.0t	1	CARBURIZED AND BLACKENED FOR WITH CYLINDER TYPE ONLY,OTHERS YELLOW CHROMATE SEAL
12	INSIDE ROSE PLATE	SPCC 2.0t	1	
13	ROTATING SPRING	SWPB	2	
14	ROTATING FIXED PLATE	SPCC 1.8t	2	CARBURIZED AND BLACKENED FOR WITH CYLINDER TYPE ONLY,OTHERS YELLOW CHROMATE SEAL
15	LEVER SLEEVE SUPPORT	SPCC 2.0t	2	
16	STRIKE PLATE-9109	SPCC,SUS 2.4t	1	
17	SPRING WIRE	ø0.7	2	
18	INSIDE RETAINER PLATE	SPCC 2.0t	2	
19	ROTATING KEY PLATE	ZINC ALLOY	4	
20	INSIDE RETAINING RING	SK5 1.2t	2	
21	RING	SK5 1.2t	2	
22	LEVER CATCH TOOL	WIRE	1	

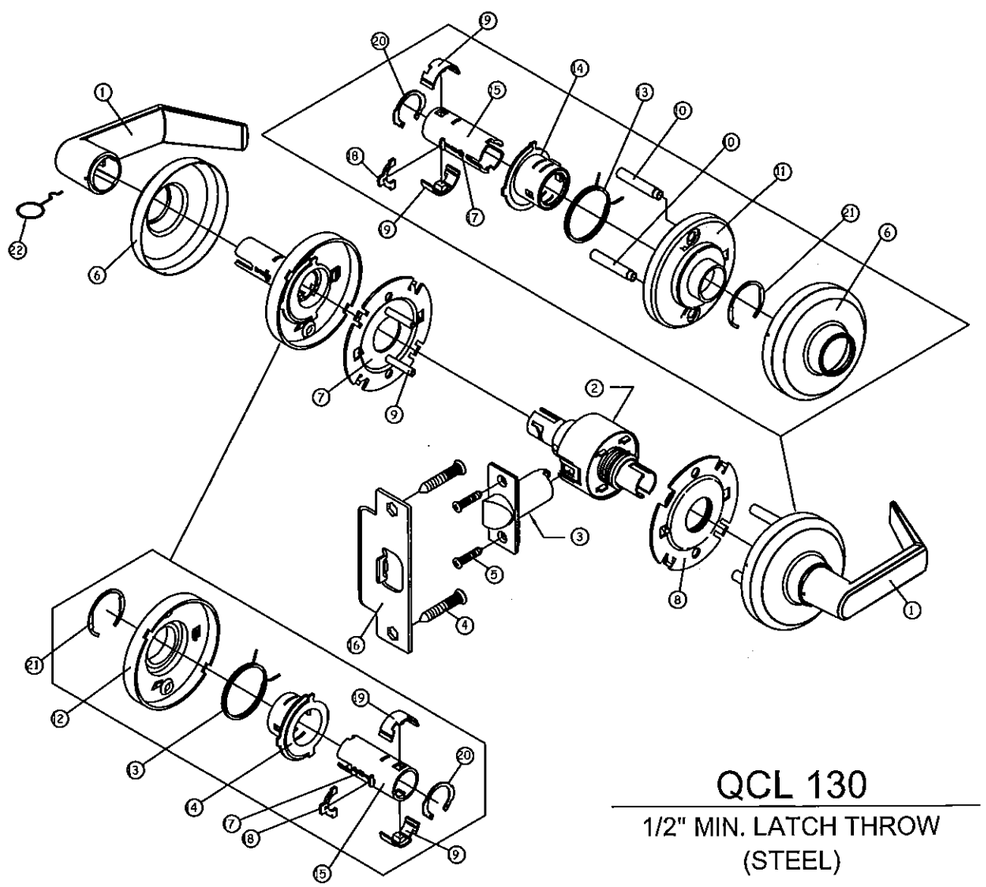

QCL 130
1/2" MIN. LATCH THROW
(STEEL)

STANLEY
Security Solutions
6161 EAST 75TH STREET
INDIANAPOLIS, IN 46250
PH: (317) 806-3288
FX: (317) 806-3337

TITLE: COMMERCIAL LOCKING HARDWARE - COMP. APPROVAL QCL 130

PREPARED BY:
BUILDING DROPS, INC.
398 E. DANIA BEACH BLVD. #338
DANIA BEACH, FL 33004
PH: (954) 399-8478 FX: (954) 744-4738

REVISIONS

NO.	DESCRIPTION	BY	DATE
A	REVISION PER M-D COMMENTS	MS	09.29.14

8-12-2015
HERMES F. MUÑOZ (?) P.E.
FLORIDA P.E. NO. 37773
398 E. DANIA BEACH BLVD. #338
DANIA BEACH, FL 33004 USA
FBPE CERT. OF AUTHORIZATION NO. 25578

PRODUCT REVISED
to complying with the Florida
Building Code
Acceptance No. 15-0217.08
Expiration Date 8/18/16
Miami-Dade Product Control

DATE: 6.22.11	DWN BY: MSS	CHK BY: HFN	SCALE: NTS

DWG #: SSS003

SHEET: 9 OF 17

QCL 100 SERIES CYLINDRICAL LEVERS TO BE USED WITH QDB SERIES 100/200 DEADBOLTS
HARDWARE MODEL (GRADE 1)
QCL 120
QCL 130
QCL 135
QCL 140
QCL 150 (SHOWN)
QCL 151
QCL 160
QCL 161
QCL 170
QCL 171

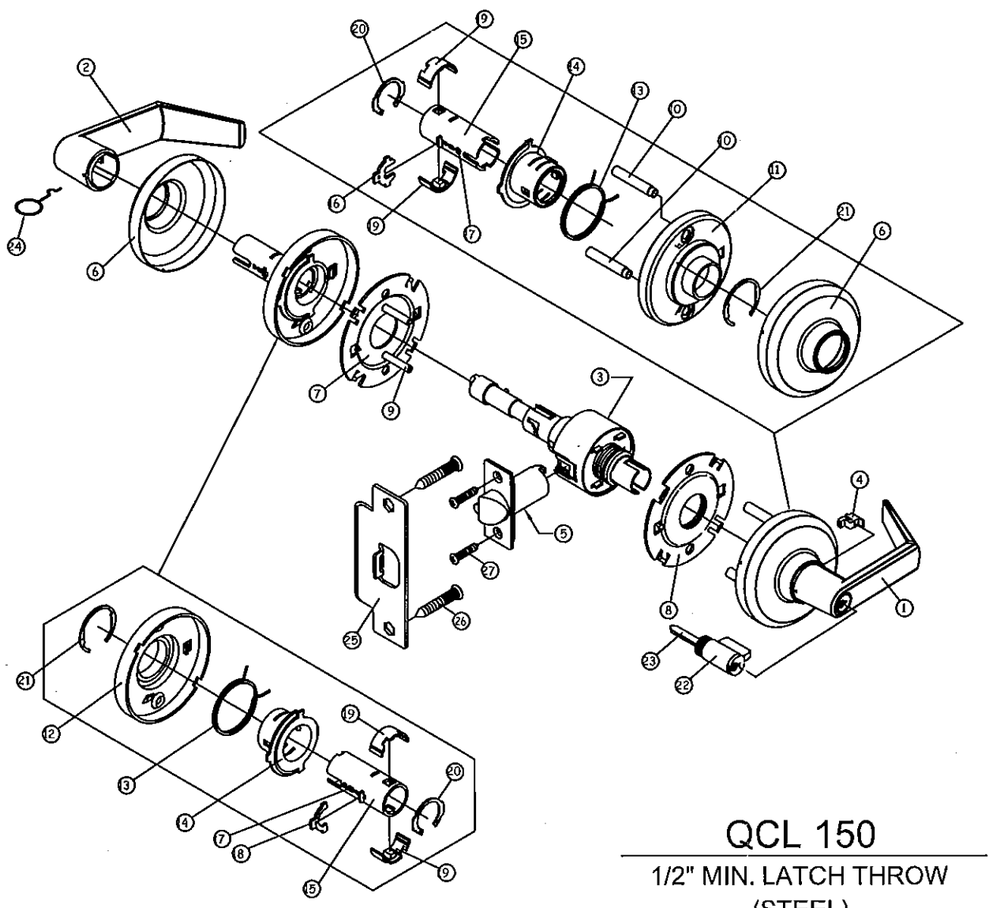

QCL 150

1/2" MIN. LATCH THROW

(STEEL)

No	COMPONENT	SPEC	Q'TY	REMARK
1	ENTRY LEVER	ZINC ALLOY	1	
2	ENTRY,PRIVACY INSIDE LEVER	ZINC ALLOY	1	(#30 OUTSIDE SAME)
3	#00 LOCK CHASSIS		1	
4	LEVER AIDED SLEEVE	PLASTIC	1	
5	#00 LATCH (Spring Loaded)	304 PM STEEL	1	
6	ROSE	CU,SUS 0.5t	2	
7	INSIDE MOUNTING PLATE	SPCC 2.0t	1	
8	OUTSIDE MOUNTING PLATE	SPCC 2.0t	1	
9	FIXED PIN	STEEL	2	
10	SUPPORTING NUT	STEEL	2	
11	OUTSIDE ROSE PLATE	SPCC 2.0t	1	CARBURIZED AND BLACKENED FOR WITH CYLINDER TYPE ONLY,OTHERS YELLOW CHROMATE SEAL
12	INSIDE ROSE PLATE	SPCC 2.0t	1	
13	ROTATING SPRING	SWPB	2	
14	ROTATING FIXED PLATE	SPCC 1.8t	2	
15	LEVER SLEEVE SUPPORT	SPCC 2.0t	2	CARBURIZED AND BLACKENED FOR WITH CYLINDER TYPE ONLY,OTHERS YELLOW CHROMATE SEAL
16	S KEYWAY RETAINER PLATE	SPCC 2.0t	1	
17	SPRING WIRE	ø0.7	2	
18	INSIDE RETAINER PLATE	SPCC 2.0t	1	
19	ROTATING KEY PLATE	ZINC ALLOY	4	
20	INSIDE RETAINING RING	SK5 1.2t	2	
21	RING	SK5 1.2t	2	
22	S KEYWAY CYLINDER		1	
23	#00 TAIL PIECE	AISI 1018 HR15N 79°~90°	1	
24	LEVER CATCH TOOL	WIRE	1	
25	STRIKE PLATE-9109	SPCC,SUS 2.4t	1	
26	SCREW	#12-24UNCx23.8	2	SAE GR. 5
27	SCREW	#8x3/4	2	

STANLEY Security Solutions

6161 EAST 75TH STREET
INDIANAPOLIS, IN 46250
PH: (317) 806-3288
FX: (317) 806-3337

TITLE: COMMERCIAL LOCKING HARDWARE - COMP. APPROVAL QCL 150

PREPARED BY:

BUILDING DROPS, INC.
398 E. DANIA BEACH BLVD. #338
DANIA BEACH, FL 33004
PH: (954) 399-8478 FX: (954) 744-4738

REVISIONS

NO.	DESCRIPTION	BY	DATE
A	REVISION PER M-D COMMENTS	MS	09.29.14

HERMES A. MONCADA, P.E.
FLORIDA P.E. NO. 73778
398 E. DANIA BEACH BLVD. #338
DANIA BEACH, FL 33004
FBPE CERT. OF AUTHORIZATION NO. 29578

8-12-2015

PRODUCT REVISED
no complying with the Florida Building Code
Acceptance No 15-0217.08
Expiration Date 8/18/16
By Ishaq I. Chanda
National Blade Product Control

DATE: 6.22.11
DWN BY: MSS
CHK BY: HFN
SCALE: NTS

DWG #: SSS003

SHEET: 10 OF 17

QCL 100 SERIES CYLINDRICAL LEVERS

TO BE USED WITH
QDB SERIES 100/200 DEADBOLTS

HARDWARE MODEL (GRADE 1)
QCL 120
QCL 130
QCL 135
QCL 140
QCL 150
QCL 151
QCL 160
QCL 161
QCL 170 (SHOWN)
QCL 171

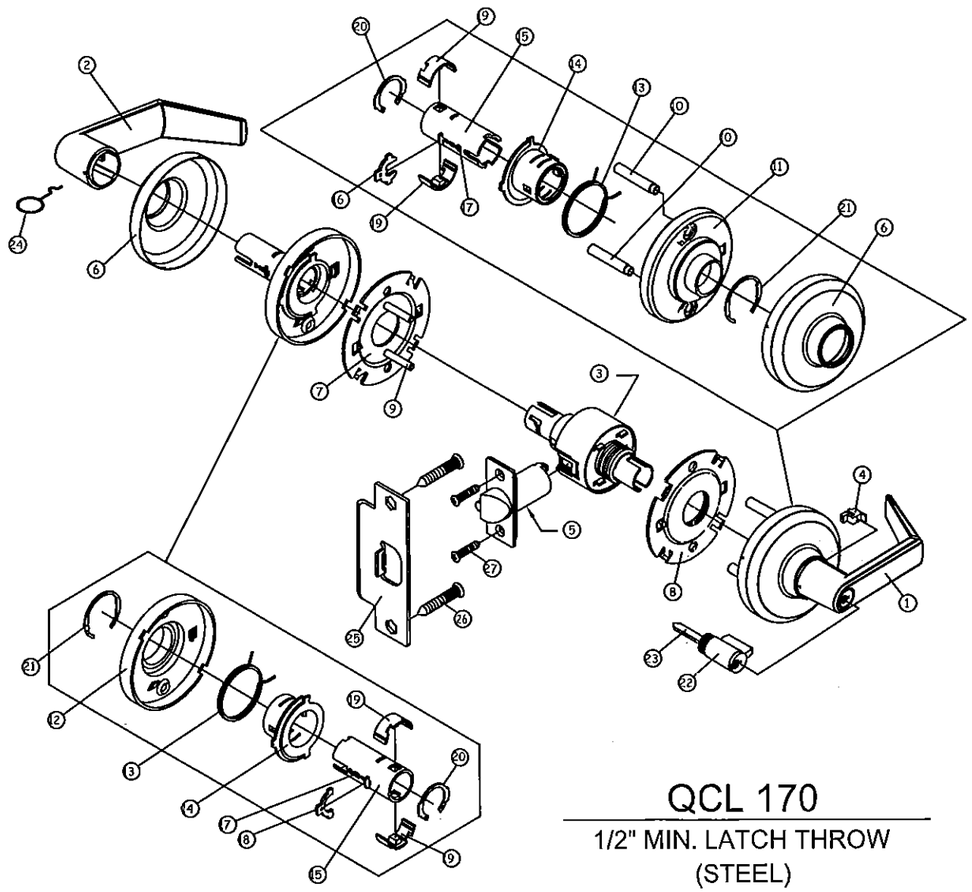

QCL 170

1/2" MIN. LATCH THROW
(STEEL)

No	COMPONENT	SPEC	Q'TY	REMARK
1	ENTRY LEVER	ZINC ALLOY	1	
2	PASSAGE LEVER	ZINC ALLOY	1	
3	#62 LOCK CHASSIS		1	
4	LEVER AIDED SLEEVE	PLASTIC	1	
5	#00 LATCH (Spring Loaded)	304 PM STEEL	1	
6	ROSE	CU,SUS 0.5t	2	
7	INSIDE MOUNTING PLATE	SPCC 2.0t	1	
8	OUTSIDE MOUNTING PLATE	SPCC 2.0t	1	
9	FIXED PIN	STEEL	2	
10	SUPPORTING NUT	STEEL	2	
11	OUTSIDE ROSE PLATE	SPCC 2.0t	1	CARBURIZED AND BLACKENED FOR WITH CYLINDER TYPE ONLY,OTHERS YELLOW CHROMATE SEAL
12	INSIDE ROSE PLATE	SPCC 2.0t	1	
13	ROTATING SPRING	SWPB	2	
14	ROTATING FIXED PLATE	SPCC 1.8t	2	
15	LEVER SLEEVE SUPPORT	SPCC 2.0t	2	CARBURIZED AND BLACKENED FOR WITH CYLINDER TYPE ONLY,OTHERS YELLOW CHROMATE SEAL
16	S KEYWAY RETAINER PLATE	SPCC 2.0t	1	
17	SPRING WIRE	ø0.7	2	
18	INSIDE RETAINER PLATE	SPCC 2.0t	1	
19	ROTATING KEY PLATE	ZINC ALLOY	4	
20	INSIDE RETAINING RING	SK5 1.2t	2	
21	RING	SK5 1.2t	2	
22	S KEYWAY CYLINDER		1	
23	#00 TAIL PIECE	AISI 1018 HR15N 79°~90°	1	
24	LEVER CATCH TOOL	WIRE	1	
25	STRIKE PLATE-9109	SPCC,SUS 2.4t	1	
26	SCREW	#12-24UNCx23.8	2	SAE GR. 5
27	SCREW	#8x3/4	2	

STANLEY
Security Solutions

6161 EAST 75TH STREET
INDIANAPOLIS, IN 46250
PH: (317) 806-3288
FX: (317) 806-3337

TITLE: COMMERCIAL LOCKING HARDWARE - COMP. APPROVAL QCL 170

PREPARED BY:
BUILDING DROPS, INC.
398 E. DANIA BEACH BLVD. #338
DANIA BEACH, FL 33004
PH: (954) 399-8478 FX: (954) 744-4738

REVISIONS

NO.	DESCRIPTION	BY	DATE
A	REVISION PER M-D COMMENTS	MS	09.29.14

8-12-2015
HERMES F. NORERO, P.E.
FLORIDA P.E. NO. 57778
398 E. DANIA BEACH BLVD. #338
DANIA BEACH, FL 33004
FBPE CERT. OF AUTHORIZATION: NO. 26578

PRODUCT REVISED
to complying with the Florida Building Code
Acceptance No 15-0217.02
Expiration Date 8/13/16
Mikael Blade Product Control

DATE: 6.22.11
DWN BY: MSS
CHK BY: HFN
SCALE: NTS

DWG #: SSS003

SHEET: 11 OF 17

QCL 200 SERIES CYLINDRICAL LEVERS

TO BE USED WITH
QDB SERIES 100/200 DEADBOLTS

HARDWARE MODEL (GRADE 2)
QCL 220
QCL 230 (SHOWN)
QCL 235
QCL 240
QCL 250
QCL 251
QCL 260
QCL 261
QCL 270
QCL 271

No	COMPONENT	SPEC	QTY	REMARK
1	Retractor spring plate	SPCC 0.9t	1	
2	Inside reactor plate	SPCC 2.3t	1	
3	Retractor	SPCC 1.6t	1	
4	Retractor sleeve	SPCC 1.4t	1	
5	Latch (Spring Loaded)	304 PM STEEL	1	
6	Retainer plate	SPCC 2.0t	1	
7	Inside retainer plate	SPCC 2.0t	1	
8	Outside reactor plate	SPCC 2.3t	1	
9	Outside spindle	SPCC 1.5t	1	
10	Seady bushing	FC-0208-40	1	
11	Passage lever	ZAMK 3	2	
12	Inside rose mounting	ZAMK	1	
13	Outside mounting plate	SPCC 2.0t	1	
14	Outside spindle	ZAMK	1	
15	Rose	C2600,SUS304 0.5t	2	
16	Inside seady bushing	ZAMAK 8	1	
17	Inside spindle	SPCC 1.5t	1	
18	Cylinder case	SPCC 0.9t	1	
19	Outside sleeve support	SPCC 1.2t	1	
20	Turning mounting	SPCC 2.0t	2	
21	Turning spring	SWPB	2	
22	Turning plate	SPCC 1.2t	2	
23	Inside mounting plate	SPCC 2.0t	1	
24	Supporting nut	Steel	2	
25	Retractor spring	SWB	2	
26	EA Twin thread wood screw	#8x19	2	
27	EA Twin thread screw	#12x23.8	2	SAE GR. 5
28	Strike	SUS	1	
29	FC Monting screw	M5x38	4	

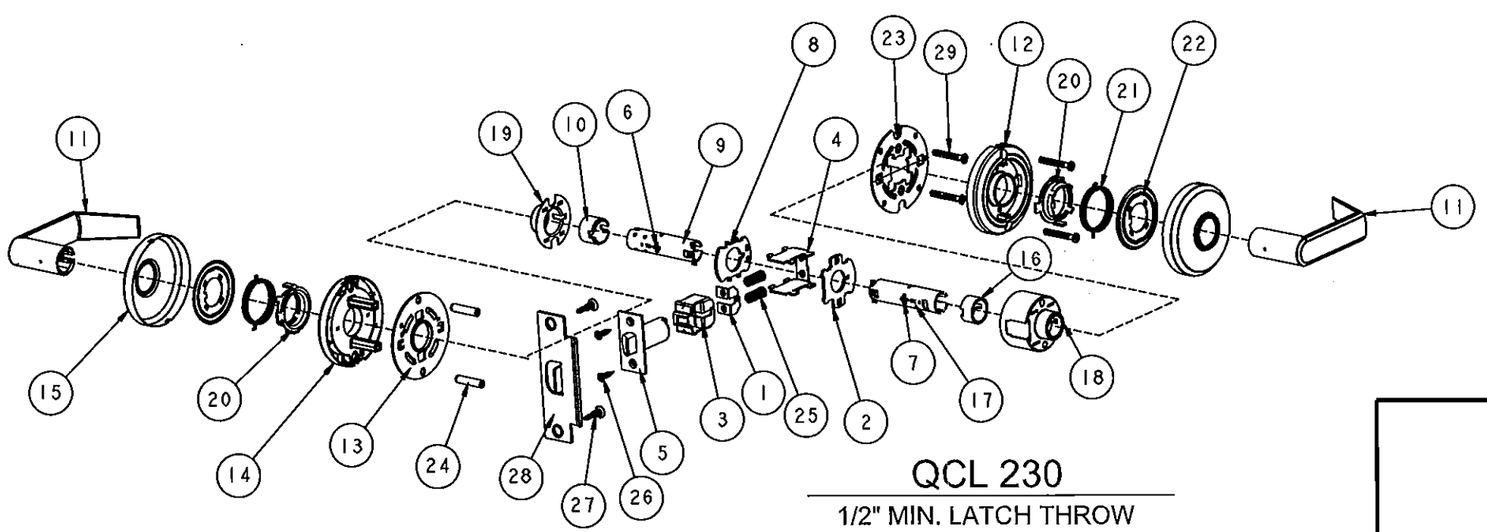

QCL 230

1/2" MIN. LATCH THROW
(STEEL)

PRODUCT REVISED
in complying with the Florida Building Code
Acceptance No 15-0217.08
Expiration Date 8/18/11
Miami/Dade Product Control

STANLEY
Security Solutions
6161 EAST 75TH STREET
INDIANAPOLIS, IN 46250
PH: (317) 806-3288
FX: (317) 806-3337

TITLE: COMMERCIAL LOCKING HARDWARE - COMP. APPROVAL QCL 230

PREPARED BY:
BUILDING DROPS, INC.
398 E. DANIA BEACH BLVD. #338
DANIA BEACH, FL 33004
PH: (954) 399-8478 FX: (954) 744-4738

REVISIONS

NO.	DESCRIPTION	BY	DATE
A	REVISION PER M-D COMMENTS	MS	09.29.14

HERBERT F. NORZIGO, P.E.
FLORIDA P.E. NO. 27575
258 S. DIXIE HWY. #202
DANIA BEACH, FL 33004
FBPE CERT. OF AUTHORIZATION NO. 29578
6-12-2015

DATE: 6.22.11	DWN BY: MSS	CHK BY: HFN	SCALE: NTS

DWG #: SSS003

SHEET: 12 OF 17

No	COMPONENT	SPEC	QTY	REMARK
1	Retractor spring plate	SPCC 0.9t	1	
2	Latch (Spring Loaded)	304 PM STEEL	1	
3	Inside reactor plate	SPCC 2.3t	1	
4	Retractor	SPCC 1.6t	1	
5	Retractor sleeve	SPCC 1.4t	1	
6	Clinder		1	
7	Retainer plate	SPCC 2.0t	1	
8	Inside retainer plate	SPCC 2.0t	1	
9	Button leeve	SUS,CU 0.4t	1	
10	Key locking ring	SPCC 2.0t	1	
11	Entry lever	ZAMK 3	1	
12	Inside rose mounting	ZAMK	1	
13	Inside lever	ZAMK 3	1	
14	Outside mounting plate	SPCC 2.0t	1	
15	Outside rose mounting	ZAMK	1	
16	Rose	C2600,SUS304 0.5t	2	
17	Inside steady bushing	ZAMAK 8	1	
18	Inside spindle	SPCC 1.5t	1	
19	Cylinder case	SPCC 0.9t	1	
20	Outside sleeve support	SPCC 1.2t	1	
21	Outside reactor plate	SPCC 2.3t	1	
22	Outside steady bushing	ZAMK	1	

No	COMPONENT	SPEC	QTY	REMARK
23	Outside spindle	SPCC 1.5t	1	
24	Outside spindle washer	SWC	1	
25	Lever aided sleeve	ABS	1	
26	Button stem	SPCC 2.3t	1	
27	Turning mounting	SPCC 2.0t	2	
28	Turning spring	SWPB	2	
29	Turning plate	SPCC 1.2t	2	
30	Inside mounting plate	SPCC 2.0t	1	
31	Supporting nut		2	
32	Key turn spring	SWB	1	
33	key turn spindle	SPCC 1.5t	1	
34	Turn push mounting	Stainless powder metallurgy	1	
35	Turn plate	SPCC 2.0t 15N80°~85°	1	
36	Entry up button washer	SPCC 1.4t	1	
37	Down button washer	SPCC 1.2t	1	
38	Pistic button	ABS	1	
39	Retvactor spring	SWB	2	
40	EA Twin thread wood screw	#8x19	2	
41	EA Twin thread screw	#12x23.8	2	SAE GR. 5
42	FC Monting screw	M5x38	4	
43	Strike	SUS	1	

QCL 200 SERIES CYLINDRICAL LEVERS
TO BE USED WITH
QDB SERIES 100/200 DEADBOLTS

HARDWARE MODEL (GRADE 2)
QCL 220
QCL 230
QCL 235
QCL 240
QCL 250 (SHOWN)
QCL 251
QCL 260
QCL 261
QCL 270
QCL 271

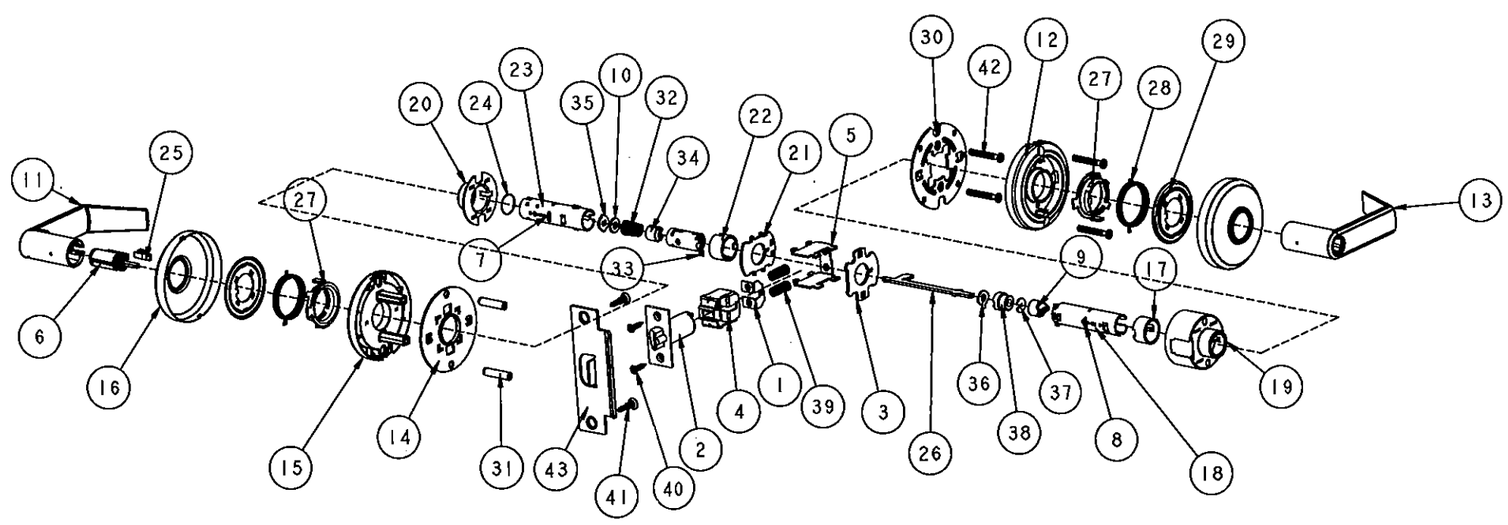

QCL 250
1/2" MIN. LATCH THROW
(STEEL)

PRODUCT REVISED
as complying with the Florida Building Code
Acceptance No. IS-0217-08
Expiration Date 8/19/16
By [signature]
National Product Control

STANLEY
Security Solutions
6161 EAST 75TH STREET
INDIANAPOLIS, IN 46250
PH: (317) 806-3288
FX: (317) 806-3337

TITLE: COMMERCIAL LOCKING HARDWARE - COMP. APPROVAL QCL 250

PREPARED BY:
BUILDING DROPS, INC.
398 E. DANIA BEACH BLVD. #338
DANIA BEACH, FL 33004
PH: (954) 399-8478 FX: (954) 744-4738

REVISIONS

NO.	DESCRIPTION	BY	DATE
A	REVISION PER M-D COMMENTS	MS	09.29.14

HERMES F. NORERO, P.E.
FLORIDA P. E. NO. 73778
398 E. DANIA BEACH BLVD. #338
DANIA BEACH, FLORIDA 33004
FBPE CERT. OF AUTHORIZATION NO. 28573

8-12-2015

DATE: 6.22.11
DWN BY: MSS
CHK BY: HFN
SCALE: NTS

DWG #: SSS003

SHEET: 13 OF 17

No	COMPONENT	SPEC	QTY	REMARK
1	Retractor spring plate	SPCC 0.9t	1	
2	Latch (Spring Loaded)	304 PM Steel	1	
3	Inside Reactor plate	SPCC 2.3t	1	
4	Retractor	SPCC 1.6t	1	
5	Retractor sleeve	SPCC 1.4t	1	
6	Cylinder		1	
7	Retainer plate	SPCC 2.0t	1	
8	Inside retainer plate	SPCC 2.0t	1	
9	Key locking ring	SPCC 2.0t	1	
10	Entry lever	ZAMK 3	1	
11	Passage lever	ZAMK 3	1	
12	Inside rose mounting	ZAMK	1	
13	Outside mounting plate	SPCC 2.0t	1	
14	Outside rose mounting	ZAMK	1	
15	Rose	C2600,SUS304 0.5t	2	
16	Inside steady bushing	ZAMAK 8	1	
17	Inside spindle	SPCC 1.5t	2	
18	Cylinder case	SPCC 0.9t	1	
19	Outside sleeve support	SPCC 1.2t	1	
20	Outside reactor plate	SPCC 2.3t	1	

No	COMPONENT	SPEC	QTY	REMARK
21	Outside steady bushing	ZAMK	1	
22	Outside spindle	SPCC 1.5t	1	
23	Outside spindle washer	SWC	1	
24	Lever aided sleeve	ABS	1	
25	Turning mounting	SPCC 2.0t	2	
26	Turning spring	SWPB	2	
27	Turning plate	SPCC 1.2t	2	
28	Inside mounting plate	SPCC 2.0t	1	
29	Supporting nut	Steel	2	
30	Key turn spring	SWB	1	
31	Key turn spindle	SPCC 1.5t	1	
32	Turn push mounting	Stainless powder metallurgy	1	
33	Turn plate	SPCC 2.0t 15N80°~85°	1	
34	Retractor spring	SWB	2	
35	EA Twin thread wood screw	#8x19	2	
36	EA Twin thread screw	#12x23.8	2	SAE GR. 5
37	FC Monting screw	M5x38	4	
38	Strike	SUS	1	

QCL 200 SERIES CYLINDRICAL LEVERS TO BE USED WITH QDB SERIES 100/200 DEADBOLTS
HARDWARE MODEL (GRADE 2)
QCL 220
QCL 230
QCL 235
QCL 240
QCL 250
QCL 251
QCL 260
QCL 261
QCL 270 (SHOWN)
QCL 271

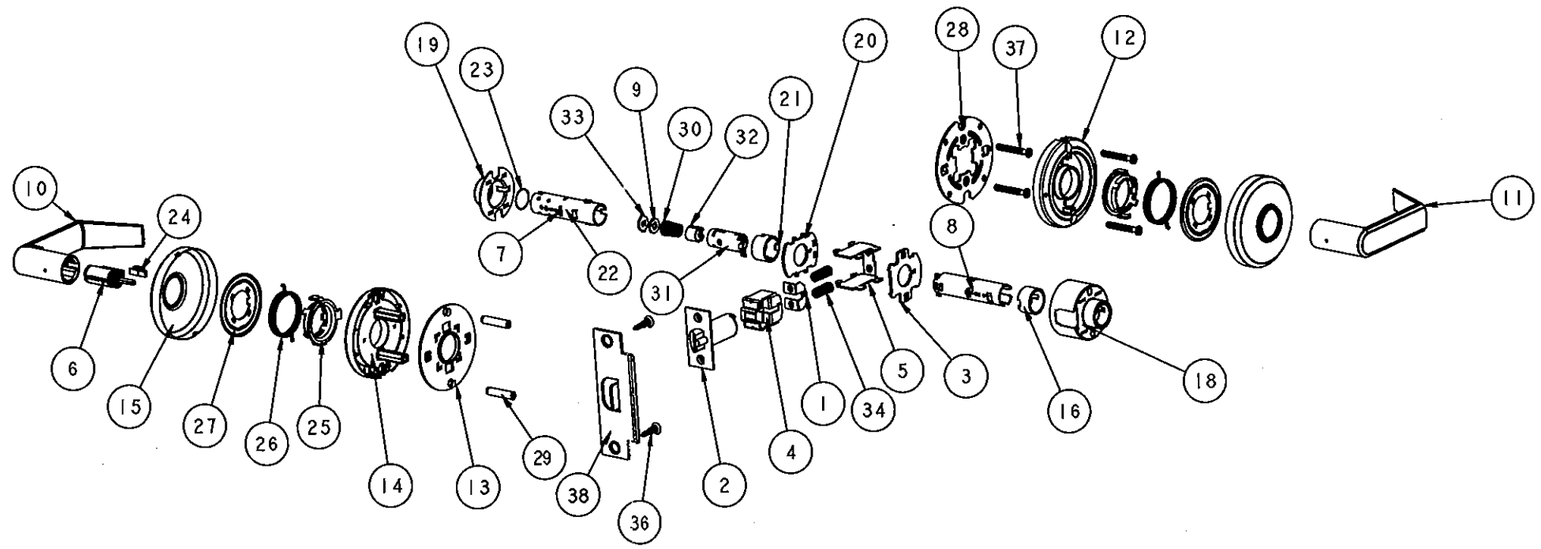

QCL 270

1/2" MIN. LATCH THROW
(STEEL)

PRODUCT REVISED
to complying with the Florida
building Code
Acceptance No. 15-0217.08
Expiration Date 8/18/16
Miami Dade Product Control

STANLEY
Security Solutions
6161 EAST 75TH STREET
INDIANAPOLIS, IN 46250
PH: (317) 806-3288
FX: (317) 806-3337

TITLE: COMMERCIAL LOCKING HARDWARE - COMP. APPROVAL QCL 270

PREPARED BY:
BUILDING DROPS, INC.
398 E. DANIA BEACH BLVD. #338
DANIA BEACH, FL 33004
PH: (954) 399-8478 FX: (954) 744-4738

REVISIONS

NO.	DESCRIPTION	BY	DATE
A	REVISION PER M-D COMMENTS	MS	09.29.14

8-12-2015

HERMES F. NORERO, P.E.
FLORIDA P. E. NO. 33778
398 E. DANIA BEACH BLVD. #338
DANIA BEACH, FLORIDA 33004
FIRM CERT. OF AUTHORIZATION NO. 28578

DATE: 6.22.11
DWN BY: MSS
CHK BY: HFN
SCALE: NTS
DWG #: SSS003
SHEET: 14 OF 17

QTL 200 SERIES TUBULAR LEVERS

TO BE USED WITH
QDB SERIES 100/200 DEADBOLTS

HARDWARE MODEL (GRADE 2)
QTL 230 (SHOWN)
QTL 240
QTL 250
QTL 251
QTL 260
QTL 261
QTL 270
QTL 271

No	COMPONENT	SPEC	QTY	REMARK
1	Retainer plate	SPCC 2.0t	1	
2	Outside turning plate	SPCC 1.5t	1	
3	Rose	C2600,SUS304 0.5t	2	
4	Inside supporting nut	Free cutting Iron	2	
5	Inside turning plate	SPCC 1.5t	1	
6	Inside spindle	SPCC 1.5t	2	
7	Fixed cylinder housing	SPCC 0.9t	1	
8	Roating stem	Steel	1	
9	Locking ring	Powder metallurgy	2	
10	Turning mounting	SPCC 1.5t	2	
11	Inside turning spring	SWPB	1	
12	Rose plate	SPCC 1.4t	2	
13	Passage lever	ZAMK 3	2	
14	Turning spring	SWPB	1	
15	Supporting nut	Free cutting Iron	2	
16	TA screw	#8x24	2	
17	EA Twin thread screw	#8x19	4	SAE GR. 5
18	Strike	SUS	1	
19	Latch (Spring Loaded)	304 PM Steel	1	
20	Rose plate	SPCC 1.4t	2	
21	Entry outside spirdle	SPCC 1.5t	1	
22	EA Twin thread screw	#12x23.8	2	SAE GR. 5

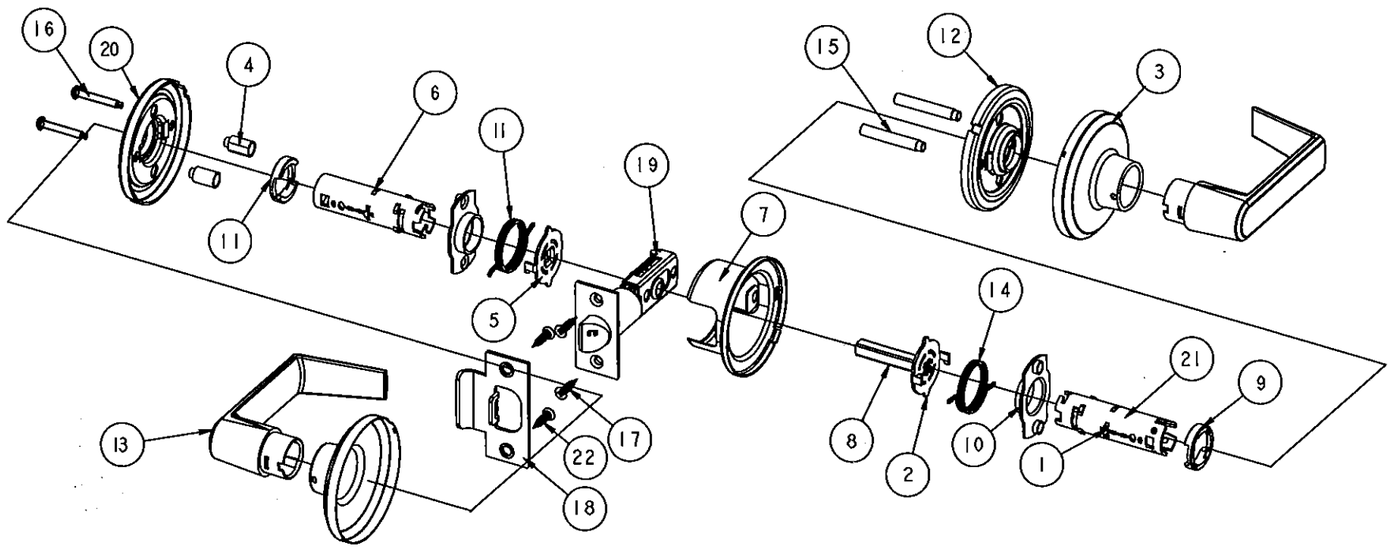

QTL 230

1/2" MIN. LATCH THROW
(STEEL)

PRODUCT REVISED
as complying with the Florida
Building Code
Acceptance No. 15-0217.08
Expiration Date 8/18/16
Product Control

STANLEY
Security Solutions

6161 EAST 75TH STREET
INDIANAPOLIS, IN 46250
PH: (317) 806-3288
FX: (317) 806-3337

TITLE: COMMERCIAL LOCKING HARDWARE - COMP. APPROVAL QTL 230

PREPARED BY:
BUILDING DROPS, INC.
398 E. DANIA BEACH BLVD. #338
DANIA BEACH, FL 33004
PH: (954) 399-8478 FX: (954) 744-4738

REVISIONS

NO.	DESCRIPTION	BY	DATE
A	REVISION PER M-D COMMENTS	MS	09.29.14

REGIS. E. NOGUERO, P.E.
FLORIDA REG. NO. 29578
398 E. DANIA BEACH BLVD. #338
DANIA BEACH, FL 33004
FBPE CERT. OF AUTHORIZATION NO. 29578

8-12-2015

DATE: 6.22.11
DWN BY: MSS
CHK BY: HFN
SCALE: NTS

DWG #: SSS003

SHEET: 15 OF 17

No	COMPONENT	SPEC	QTY	REMARK
1	Retainer plate	SPCC 2.0t	1	
2	Steady piece	SPCC 1.2t	1	
3	Rose	C2600,SUS304 0.5t	2	
4	Inside supporting nut	Free cutting iron	2	
5	Inside turning plate	SPCC 1.5t	1	
6	Outside spindle	SPCC 1.5t	1	
7	Fixed cylinder housing	SPCC 0.9t	1	
8	Outside turning plate	SPCC 1.5t	1	
9	Locking recover plate	SPCC 1.6t15N70~75°	1	
10	Locking Fixed plate	SPCC 1.2t	1	
11	Locking ring	Powder metallurgy	2	
12	Locking plate	SPCC 1.2t15N80~85°	2	
13	Turning mounting	SPCC 1.5t	2	
14	Turning stem mounting	SPCC 1.2T	1	
15	Roating key plate	SPCC 1.4t15N70~75°	1	
16	Retainer plate	SPCC 2.0t	1	
17	Cylinder lock turn mounting	Powder metallurgy	1	
18	Turn button	POM	1	
19	Turn button mounting	POM	1	

No	COMPONENT	SPEC	QTY	REMARK
20	Turn button Cover	SUS304, C2600 0.4t	1	
21	Entry turn button stem	SPCC 2.0t15N80~85°	1	
22	Rose plate	SPCC 1.4t	2	
23	Entry lever	ZAMK 3	1	
24	Inside lever	ZAMK 3	1	
25	Cylinder		1	
26	Entry outside spirdle	SPCC 1.5t	1	
27	Lever alded sleeve	ABS	1	
28	Inside turning spring	SWPB	1	
29	Turning spring	SWPB	1	
30	Supporting nut	Free cutting Iron	2	
31	Roating stem	Steel	1	
32	Locking spring	SWC Ø0.7	1	
33	TA screw	#8x24	2	
34	EA Twin thread screw	#8x19	4	SAE GR. 5
35	Strike	SUS	1	
36	Latch (Spring Loaded)	304 PM Steel	1	
37	EA Twin thread screw	#12x23.8	2	SAE GR. 5

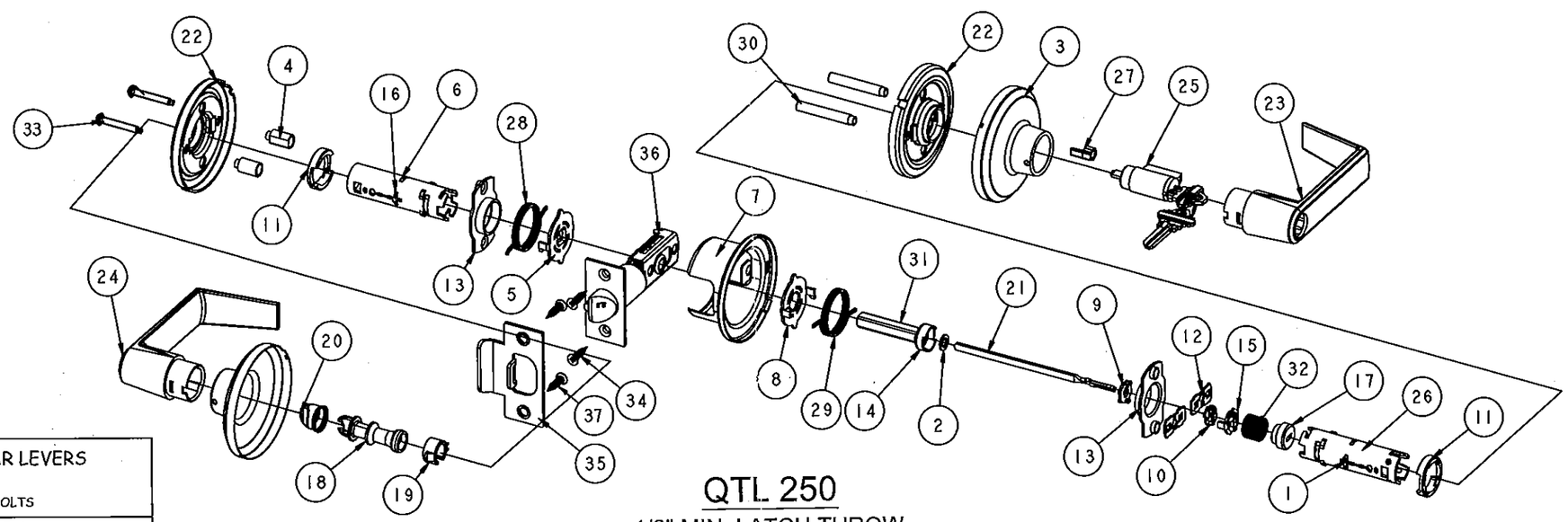

QTL 250

1/2" MIN. LATCH THROW
(STEEL)

QTL 200 SERIES TUBULAR LEVERS TO BE USED WITH QDB SERIES 100/200 DEADBOLTS
HARDWARE MODEL (GRADE 2)
QTL 230
QTL 240
QTL 250 (SHOWN)
QTL 251
QTL 260
QTL 261
QTL 270
QTL 271

PRODUCT REVISED
to complying with the Florida
building Code
Acceptance No. 15-0217.08
Expiration Date 8/18/16
By
Miami Dade Product Control

STANLEY
Security Solutions
6161 EAST 75TH STREET
INDIANAPOLIS, IN 46250
PH: (317) 806-3288
FX: (317) 806-3337

TITLE: COMMERCIAL LOCKING HARDWARE - COMP. APPROVAL QTL 250

PREPARED BY:
BUILDING DROPS, INC.
398 E. DANIA BEACH BLVD. #338
DANIA BEACH, FL 33004
PH: (954) 399-8478 FX: (954) 744-4738

REVISIONS

NO.	DESCRIPTION	BY	DATE
A	REVISION PER M-D COMMENTS	MS	09.29.14

8-12-2015
HERMES F. NORERO, P.E.
FLORIDA P.E. NO. 73773
398 E. DANIA BEACH BLVD. #330
DANIA BEACH, FL 33004
REPE CERT. OF AUTHORIZATION NO. 23378

DATE: 6.22.11
DWN BY: MSS
CHK BY: HFN
SCALE: NTS

DWG #: SSS003

SHEET: 16 OF 17

No	COMPONENT	SPEC	QTY	REMARK
1	Retainer plate	SPCC 2.0t	1	
2	Inside retainer plate	SPCC 1.2t	2	
3	Outside turning plate	SPCC 1.5t	1	
4	Turning stem mounting	SPCC 1.2T	1	
5	Cylinder lock turn mounting	Powder metalluigy	1	
6	Rose	C2600,SUS304 0.5t	2	
7	Inside supdrting nut	Free cutting iron	2	
8	Inside turning plate	SPCC 1.5t	1	
9	Inside spindle	SPCC 1.5t	1	
10	Fixed cylinder housing	SPCC 0.9t	1	
11	Locking fixed plate	SPCC 1.2t	1	
12	Locking ring	Powder metalluigy	2	
13	Locking plate	SPCC 1.2t15N80~85°	2	
14	Turning mounting	SPCC 1.5t	2	
15	Roating key plate	SPCC 1.4t15N70~75°	1	
16	Retainer plate	SPCC 2.0t	1	
17	Turn button stem	SPCC 2.0t15N80~85°	1	
18	Rose plate	SPCC 1.4t	2	
19	Entry lever	ZAMK 3	1	

No	COMPONENT	SPEC	QTY	REMARK
20	Possage lever	ZAMK 3	1	
21	Cylinder		1	
22	Entry outside spindle	SPCC 1.5t	1	
23	Lever aided sleeve	ABS	1	
24	Inside turning spring	SWPB	1	
25	Turning spring	SWPB	1	
26	Supporting nut	Free cutting iron	2	
27	Roating stem	Steel	1	
28	Locking spring	SWC Ø0.7	1	
29	TA screw	#8x24	2	
30	EA Twin thread screw	#8x19	4	SAE GR. 5
31	Strike	SUS	1	
32	Latch (Spring Loaded)	304 PM Steel	1	
33	EA Twin Thread Screw	#12 x 23.8	2	SAE GR. 5

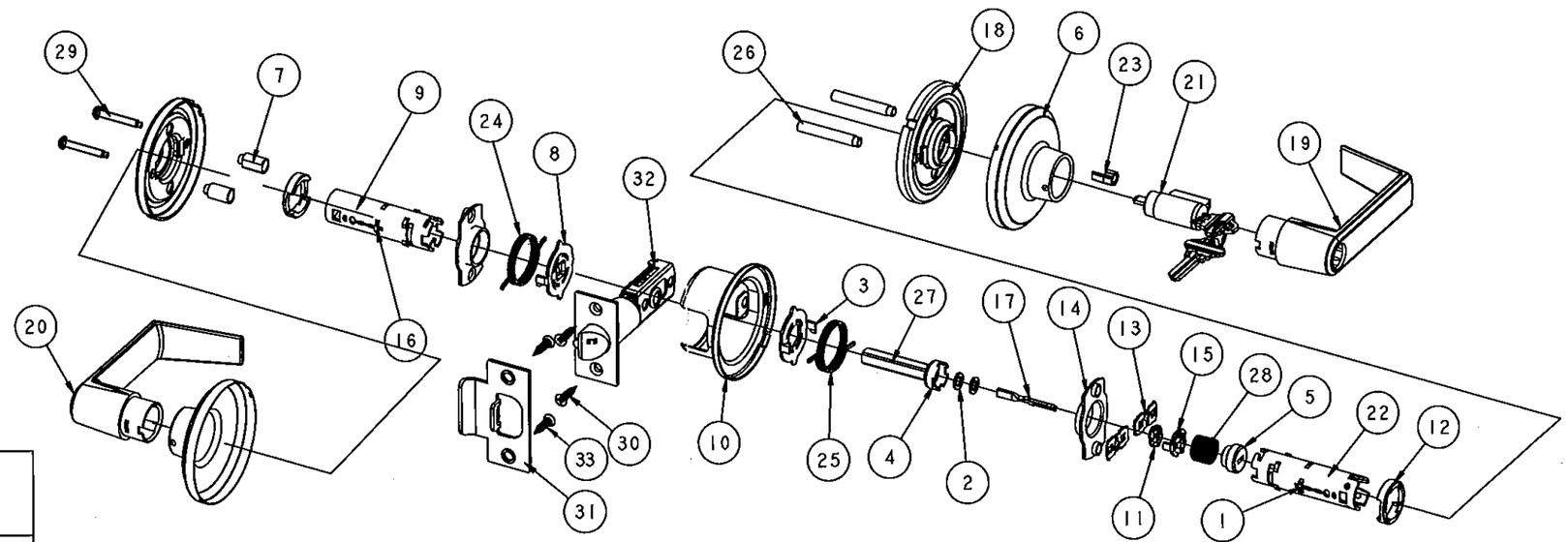

QTL 270

1/2" MIN. LATCH THROW

(STEEL)

QTL 200 SERIES TUBULAR LEVERS TO BE USED WITH QDB SERIES 100/200 DEADBOLTS
HARDWARE MODEL (GRADE 2)
QTL 230
QTL 240
QTL 250
QTL 251
QTL 260
QTL 261
QTL 270 (SHOWN)
QTL 271

PRODUCT REVISED
to complying with the Florida
Building Code
Acceptance No 15-0212.17.08
Expiration Date AUG 18, 2016
By Ishwar L. Khan
Miami Dade Product Control

STANLEY
Security Solutions
6161 EAST 75TH STREET
INDIANAPOLIS, IN 46250
PH: (317) 806-3288
FX: (317) 806-3337

TITLE: COMMERCIAL LOCKING HARDWARE - COMP. APPROVAL QTL 270

PREPARED BY:
BUILDING DROPS, INC.
398 E. DANIA BEACH BLVD. #338
DANIA BEACH, FL 33004
PH: (954) 399-8478 FX: (954) 744-4738

REVISIONS

NO.	DESCRIPTION	BY	DATE
A	REVISION PER M-D COMMENTS	MS	09.29.14

5-12-2015
HERMES F. NORSKOG P.E.
FLORIDA P. E. NO. 73778
303 E. DANIA BEACH BLVD. #338
DANIA BEACH, FL 33004
FBPE CERT. OF AUTHORIZATION NO. 28578

DATE: 6.22.11
DWN BY: MSS
CHK BY: HFN
SCALE: NTS

DWG #: SSS003

SHEET: 17 OF 17