MIAMI-DADE COUNTY
DEPARTMENT OF REGULATORY AND ECONOMIC RESOURCES (RER)
BOARD AND CODE ADMINISTRATION DIVISION

MIAMI-DADE COUNTY
PRODUCT CONTROL SECTION
11805 SW 26 Street, Room 208
Miami, Florida 33175-2474
T (786) 315-2590 F (786) 315-2599
www.miamidade.gov/economy

NOTICE OF ACCEPTANCE (NOA)

Temtrol, LLC
106 N. Industrial Blvd.
Okarche, OK 73762

SCOPE:
This NOA is being issued under the applicable rules and regulations governing the use of construction materials. The documentation submitted has been reviewed and accepted by Miami-Dade County RER- Product Control Section to be used in Miami Dade County and other areas where allowed by the Authority Having Jurisdiction (AHJ).

This NOA shall not be valid after the expiration date stated below. The Miami-Dade County Product Control Section (In Miami Dade County) and/or the AHJ (in areas other than Miami Dade County) reserve the right to have this product or material tested for quality assurance purposes. If this product or material fails to perform in the accepted manner, the manufacturer will incur the expense of such testing and the AHJ may immediately revoke, modify, or suspend the use of such product or material within their jurisdiction. RER reserves the right to revoke this acceptance, if it is determined by Miami-Dade County Product Control Section that this product or material fails to meet the requirements of the applicable building code.

This product is approved as described herein, and has been designed to comply with the High Velocity Hurricane Zone of the Florida Building Code.

DESCRIPTION: Temtrol Series "WF" Air Handling Unit

APPROVAL DOCUMENT: Drawing No. CD-100, titled " Temtrol Series "WF" Air Handling Unit ", sheets 1 through 6 of 6, prepared by Temtrol, Inc., dated April 17, 2015, signed and sealed by John D. Winslow, P.E., on April 21, 2015, bearing the Miami-Dade County Product Control Revision stamp with the Notice of Acceptance number and the expiration date by the Miami-Dade County Product Control Section.

MISSILE IMPACT RATING: Large and Small Missile Impact Resistant

LABELING: Each unit shall bear a permanent label with the manufacturer's name or logo, Okarche, OK; or Oklahoma City, OK, and the following statement: "Miami-Dade County Product Control Approved", unless otherwise noted herein.

RENEWAL of this NOA shall be considered after a renewal application has been filed and there has been no change in the applicable building code negatively affecting the performance of this product.

TERMINATION of this NOA will occur after the expiration date or if there has been a revision or change in the materials, use, and/or manufacture of the product or process. Misuse of this NOA as an endorsement of any product, for sales, advertising or any other purposes shall automatically terminate this NOA. Failure to comply with any section of this NOA shall be cause for termination and removal of NOA.

ADVERTISEMENT: The NOA number preceded by the words Miami-Dade County, Florida, and followed by the expiration date may be displayed in advertising literature. If any portion of the NOA is displayed, then it shall be done in its entirety.

INSPECTION: A copy of this entire NOA shall be provided to the user by the manufacturer or its distributors and shall be available for inspection at the job site at the request of the Building Official.

This NOA **revises NOA #14-0828.03** and consists of this page 1, evidence submitted pages E-1, E-2, & E-3 as well as approval document mentioned above.
The submitted documentation was reviewed by **Helmy A. Makar, P.E., M.S.**

MIAMI-DADE COUNTY APPROVED

Helmy A. Makar
04/23/2015

NOA No. 15-0218.10
Expiration Date: 10/10/2015
Approval Date: 04/23/2015

Temtrol, LLC

NOTICE OF ACCEPTANCE: EVIDENCE SUBMITTED

1. EVIDENCE SUBMITTED UNDER PREVIOUS APPROVAL #02-0404.05

A. DRAWINGS

1. *Drawing No. CD-100, titled " Temtrol Series "WF" Air Handling Unit ", sheets 1 through 4 of 4, prepared by Temtrol, Inc., dated September 17, 2002, signed and sealed by John D. Winslow, P.E.*

B. TESTS

1. *Test reports on 1) Air Infiltration Test, per SFBC, PA 202-94, 2) Uniform Static Air Pressure Test, Loading per SFBC PA 202-94, 3) Water Resistance Test, per SFBC, PA 202-94, 4) Large Missile Impact Test per SFBC, PA 201-94, 5) Cyclic Wind Pressure Loading per SFBC, PA 203-94, along with marked-up drawings and installation diagram of Temtrol Series "WF" Air Handling Unit, prepared by National Certified Testing Laboratories, Test Report No. 210-2660-1, dated 02/01/02, signed and sealed by Barry D. Portnoy, P.E.*

C. CALCULATIONS

1. *Calculation of Panel Fastener Suitability, prepared by John D. Winslow, P.E., dated 03/01/02, signed and sealed by John D. Winslow, P.E.*

D. MATERIAL CERTIFICATIONS

1. *Tensile test report by QC Metallurgical, Inc., report #2BM-191, dated 02/19/02, signed and sealed by Frank E. Grate Jr., P.E.*

E. STATEMENTS

1. *Statement letter of conformance, signed and sealed by John D. Winslow, P.E.*

2. EVIDENCE SUBMITTED UNDER PREVIOUS APPROVAL # 07-0831.08

A. DRAWINGS

1. *None.*

B. TESTS

1. *None.*

C. CALCULATIONS

1. *None.*

D. QUALITY ASSURANCE

1. *By Miami-Dade County Building Code Compliance Office.*

E. MATERIAL CERTIFICATIONS

1. *None.*

Helmy A. Makar, P.E., M.S.
Product Control Unit Supervisor
NOA No. 15-0218.10
Expiration Date: 10/10/2015
Approval Date: 04/23/2015

NOTICE OF ACCEPTANCE: EVIDENCE SUBMITTED

3. EVIDENCE SUBMITTED UNDER PREVIOUS APPROVAL # 12-0813.06

A. DRAWINGS

1. *Drawing No. CD-100, titled " Temtrol Series "WF" Air Handling Unit ", sheets 1 through 4 of 4, prepared by Temtrol, Inc., dated September 17, 2002 and October 11, 2012, signed and sealed by John D. Winslow, P.E., on October 11, 2012.*

B. TESTS

1. *None.*

C. CALCULATIONS

1. *None.*

D. QUALITY ASSURANCE

1. *By Miami-Dade County Department of Regulatory and Economic Resources.*

E. MATERIAL CERTIFICATIONS

1. *None.*

F. STATEMENTS

1. *Statement letter of conformance, dated August 02, 2012, signed and sealed by John D. Winslow, P.E.*

4. EVIDENCE SUBMITTED UNDER PREVIOUS APPROVAL # 13-0626.01

A. DRAWINGS

1. *None.*

B. TESTS

1. *None.*

C. CALCULATIONS

1. *None.*

D. QUALITY ASSURANCE

1. *By Miami-Dade County Department of Regulatory and Economic Resources.*

E. MATERIAL CERTIFICATIONS

1. *None.*

Helmy A. Makar, P.E., M.S.
Product Control Unit Supervisor
NOA No. 15-0218.10
Expiration Date: 10/10/2015
Approval Date: 04/23/2015

NOTICE OF ACCEPTANCE: EVIDENCE SUBMITTED

5. EVIDENCE SUBMITTED UNDER PREVIOUS APPROVAL # 14-0828.03

A. DRAWINGS

1. None.

B. TESTS

1. None.

C. CALCULATIONS

1. None.

D. QUALITY ASSURANCE

1. By Miami-Dade County Department of Regulatory and Economic Resources.

E. MATERIAL CERTIFICATIONS

1. None.

6. NEW EVIDENCE SUBMITTED

A. DRAWINGS

1. Drawing No. CD-100, titled " Temtrol Series "WF" Air Handling Unit ", sheets 1 through 6 of 6, prepared by Temtrol, Inc., dated April 17, 2015, signed and sealed by John D. Winslow, P.E., on April 21, 2015.

B. TESTS

1. None.

C. CALCULATIONS

1. None.

D. QUALITY ASSURANCE

1. By Miami-Dade County Department of Regulatory and Economic Resources.

E. MATERIAL CERTIFICATIONS

1. None.

Hany A. Makar, P.E., M.S.
Product Control Unit Supervisor
NOA No. 15-0218.10
Expiration Date: 10/10/2015
Approval Date: 04/23/2015

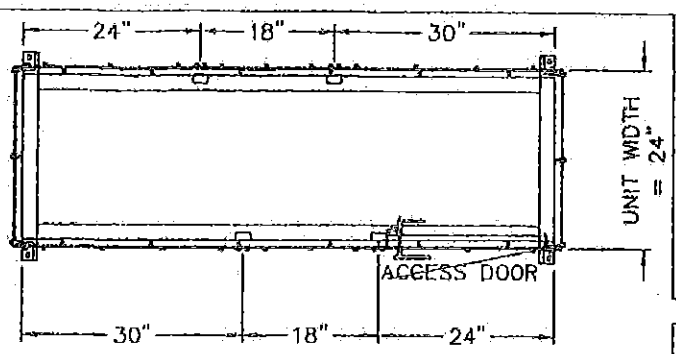

PLAN VIEW

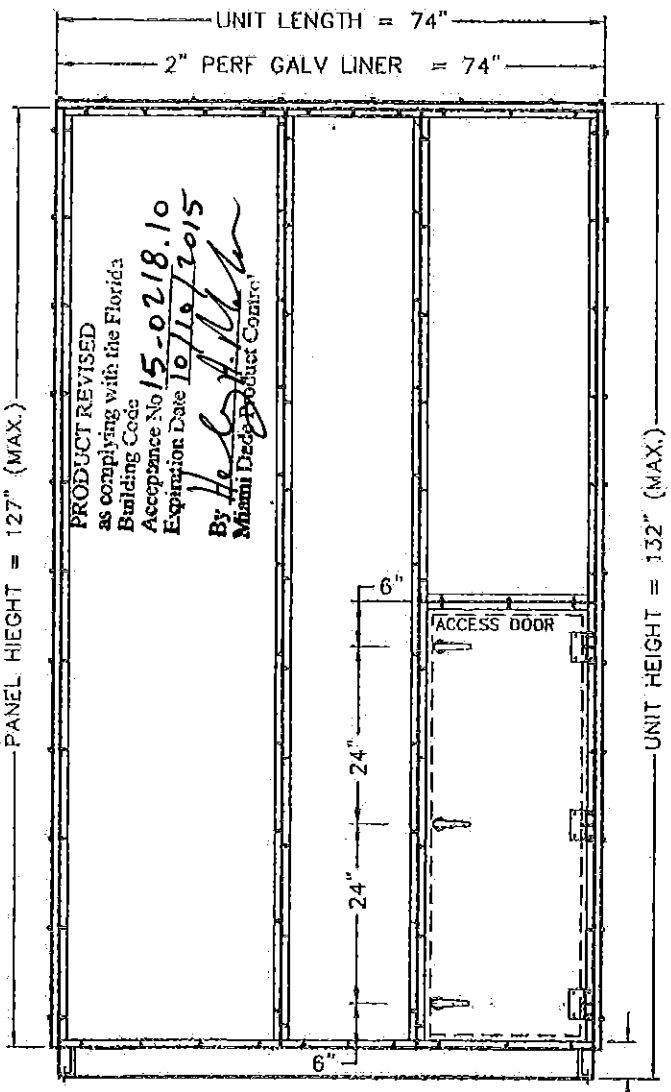

RIGHT ELEVATION

PRODUCT REVISED
as complying with the Florida
Building Code
Acceptance No 15-0218.10
Expiration Date 10/10/2015
By: [illegible]
Miami Dade Product Control

APPROVED MAX. SIZES FOR PANELS	
EXTERIOR LINER 0.0635"(min.) G-90 Galv. 30x127 24x127 18x127	INTERIOR LINER (See Note #2 Sht. 2 of 4) 30x127 24x127 18x127

FASTENERS

Panels secured to the Tubular Steel Frame with 1/4" Hex Head, Zinc Plated, Fasteners and Neoprene Washers Self-Tapping 9.0" O.C. (MAX.)

UNIT BASE

Fully Welded 0.123" (min.) Thick Structural Steel Tubing with intermediate C-Channel Cross Supports at 24" O.C. (See Notes Sht. 4 of 4)

UNIT FLOORS

Inner walk on Floor is 0.0635"(min.) G-90 Galv. Steel
Outer Floor is 0.0396"(min.) G-90 Galv. Steel

UNIT FRAMEWORK

0.0785"(min.) Tubular Steel Framework @ 30" O.C. (MAX.)

ACCESS DOOR (21"x 57")

0.0635"(min.) G-90 Galv. (Outer)
0.0396"(min.) G-90 Galv. (Inner)
Allegis Vertical Handles
Heavy-Duty Doorhinge Temtrol
ZINC PLATED

JOHN D. WINSLOW
LICENSE
No. 65584
STATE OF FLORIDA
PROFESSIONAL ENGINEER

Temtrol 15 EAST OKLAHOMA AVENUE OKARCHE, OK 73762	TEMTROL SERIES "WF" AIR HANDLING UNIT	CD-100
	PANEL ASSEMBLY	~~03-17-2002~~ 4-17-15 / 1 of 6

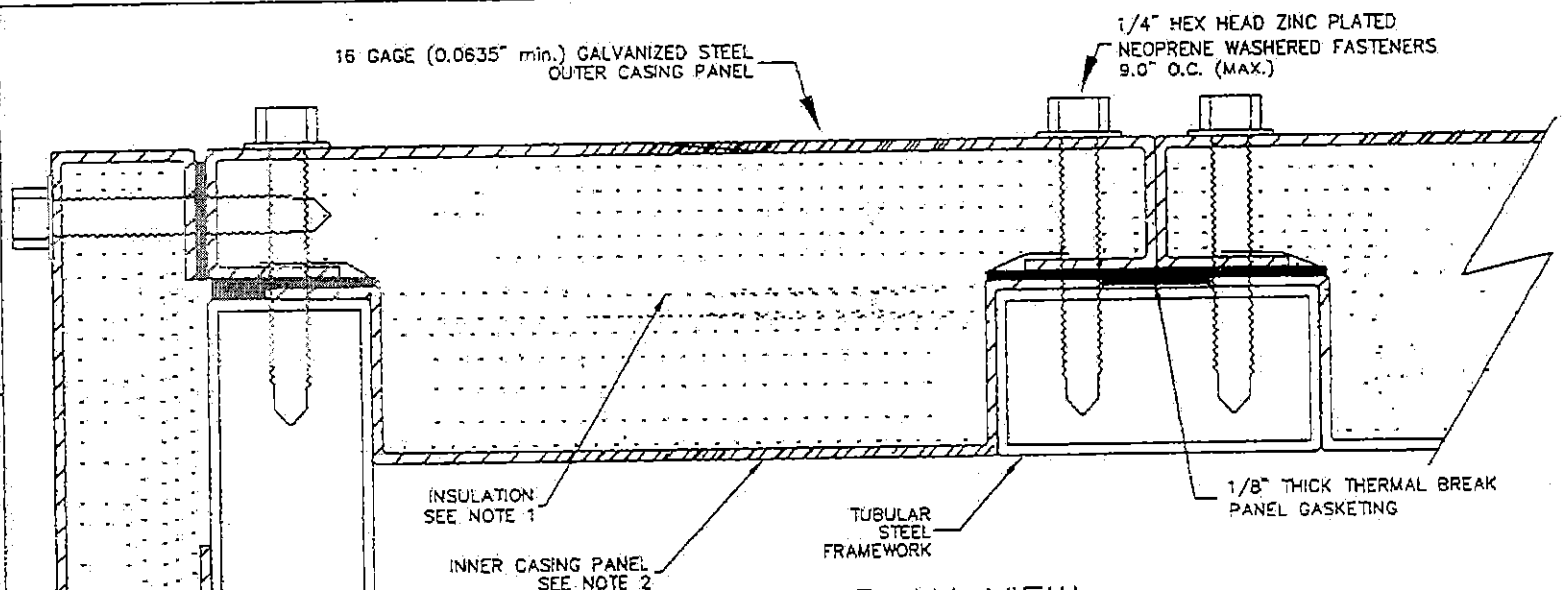

PLAN VIEW

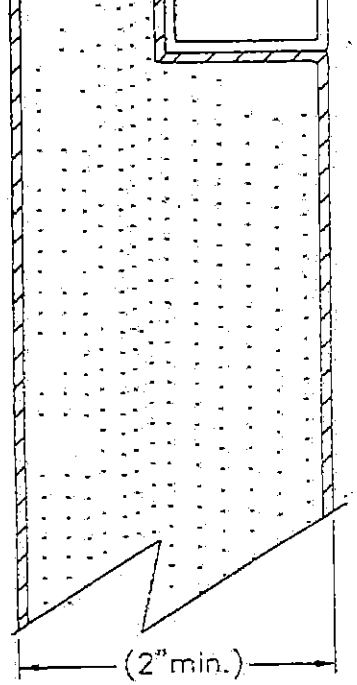

NOTES:

1. Doublewall thickness can be from 2 to 4 inches. The semi-rigid blanket-type fiberglass insulation has thermal and acoustical properties that meet or exceed a 3 pound density rating. The dual-density material meets the erosion requirements of UL 181 facing the airstream and a Fire Hazard Classification of 25/50 (per ASTM E 84 and UL 723).

2. Standard INNER casing panels are solid 20 ga. (0.0396" min.) or perforated 22 ga. (0.0336" min.) G-90 GALVANIZED STEEL which may be used in any combination as may be required throughout the air handling unit casing.

3. For maximum Roof/Floor & Wall panel sizes and details, (See Sht. 1 of 4).

4. Maximum Wall panel's design pressure = +100.0 / -100.0 PSF

5. Maximum Roof / Floor panel's design pressure = +75.0 / -75.0 PSF

6. Air handling unit complies withFlorida Building Code 2010 edition.

PRODUCT REVISED
as complying with the Florida
Building Code
Acceptance No 15-0218.10
Expiration Date 10/10/2015
By [signature]
Miami Dade Product Control

JOHN D. WINSLOW
LICENSE
No. 55841
STATE OF FLORIDA
PROFESSIONAL ENGINEER

Temtrol
15 EAST OKLAHOMA AVENUE CHARCHE, OK 73762

TEMTROL SERIES "WF" AIR HANDLING UNIT

PANEL / TUBULAR CONSTRUCTION

CD-100

~~09-17-2002~~
4-17-15

2 of 6

Note:

1. Attachment to the roof to prevent sliding and overturning of the Air Handling Unit is not part of the scope of this product approval. They shall be reviewed by the corresponding building department.

2. 1/4" Hex Head Zinc Plated Fasteners used on 9" O.C. to fasten the Unit Floors to the Unit Base (see sht 1 of 4)

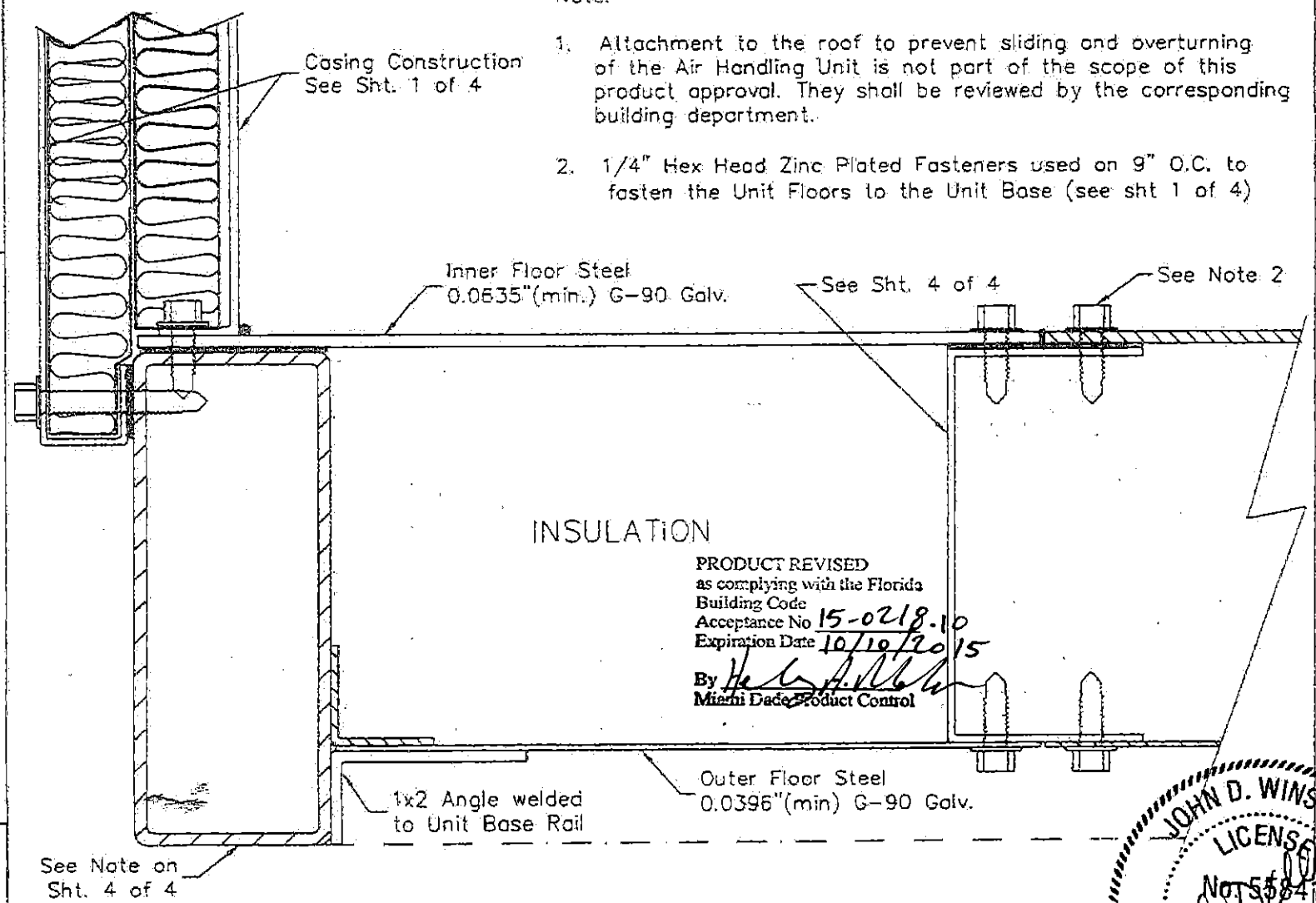

PRODUCT REVISED
as complying with the Florida
Building Code
Acceptance No 15-0218.10
Expiration Date 10/10/2015
By
Miami Dade Product Control

JOHN D. WINSLOW
LICENSE
No. 55847
STATE OF
FLORIDA
PROFESSIONAL ENGINEER

Temtrol
18 EAST OKLAHOMA AVENUE OKARCHE, OK 73762

TEMTROL SERIES "WF" AIR HANDLING UNIT

BASE CONSTRUCTION

CD-100

~~09-17-2002~~
4-17-15

39-6

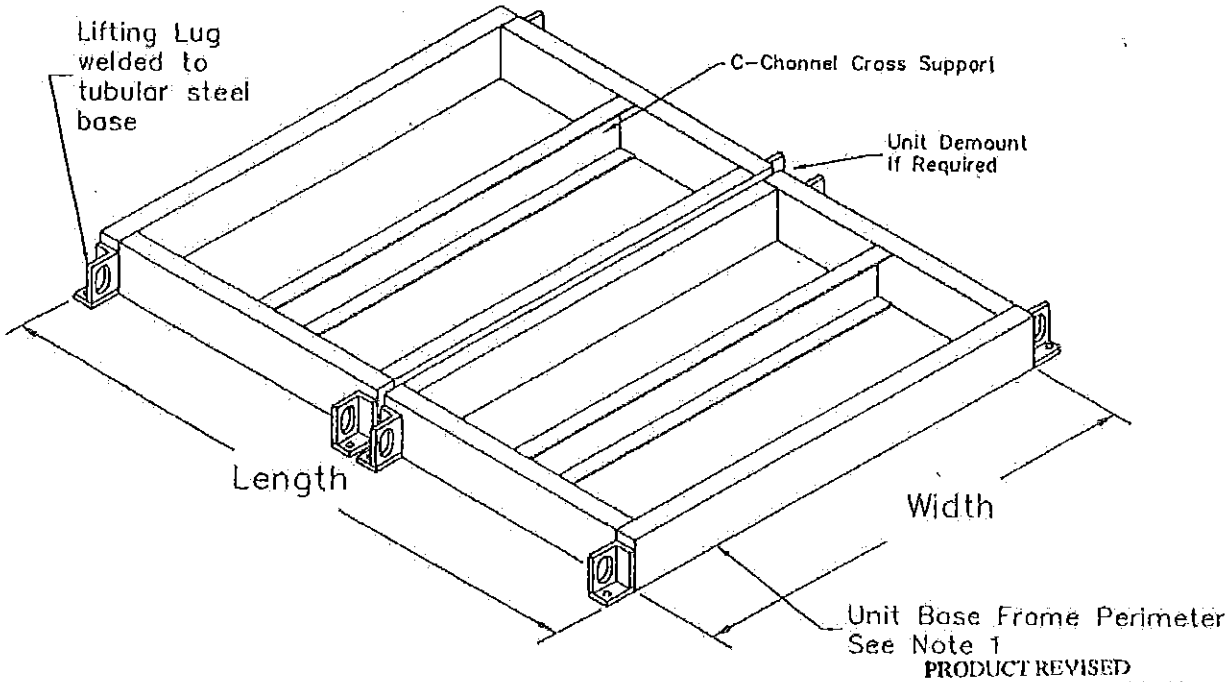

PRODUCT REVISED
as complying with the Florida Building Code
Acceptance No 15-0218.10
Expiration Date 10/10/2015
By
Miami Dade Product Control

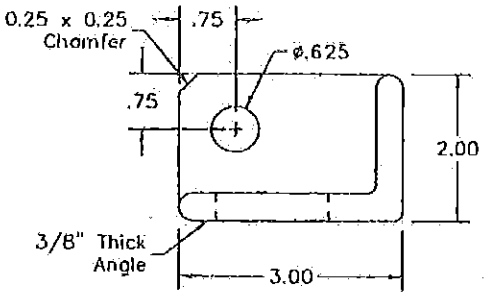

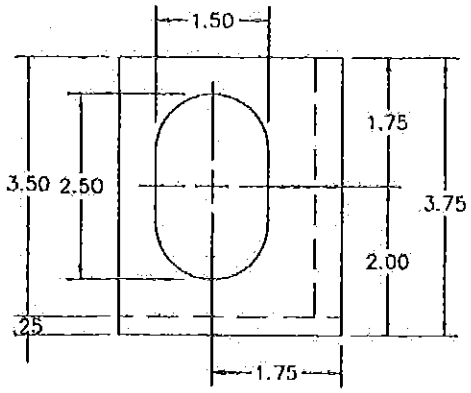

TYPICAL LIFTING LUG

NOTES:

1. All joints of structural members are continuously arc welded.
2. Unit Base as shown is completely primed and painted prior to floor panel attachment.
3. The unit base frame perimeter is fully welded 0.123" (min.) thickness structural steel tubing and fitted with C-Channel cross support members on 24" O.C. (max.)
4. Air Handling Unit size can vary, but spacing of Tubular Steel Framework not to exceed maximum Roof/Floor and Wall panel width as shown on Sheet 1 of 4.
5. Design and Size of tubular steel framework / base rail will vary and their structural adequacy as well as that of the support and attachment to the roof/floor are not part of the scope of this approval. This shall be reviewed by the corresponding building department.
6. Air handling unit complies with Florida Building Code 2010 edition.

JOHN D. WINSLOW
LICENSE
No. 55840
STATE OF FLORIDA
PROFESSIONAL ENGINEER

Temtrol 15 EAST ORLANDIA AVENUE OKARCHE, OK 73762	TEMTROL SERIES "WF" AIR HANDLING UNIT	100
	BASE CONSTRUCTION	~~08-17-2002~~ 4-17-15 / 4 of 6

See Box 3 on page 1.

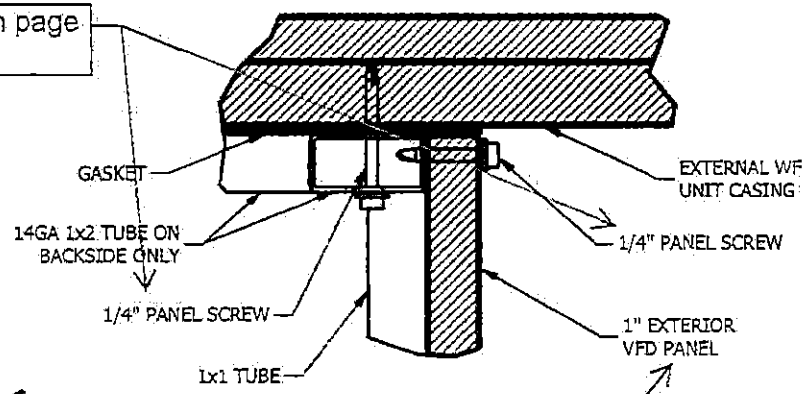

SECTION A-A

Max size of compartment is 30" deep.

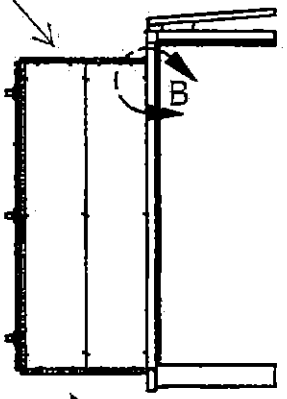

See Box 1 and Page 2. Exterior Liner.

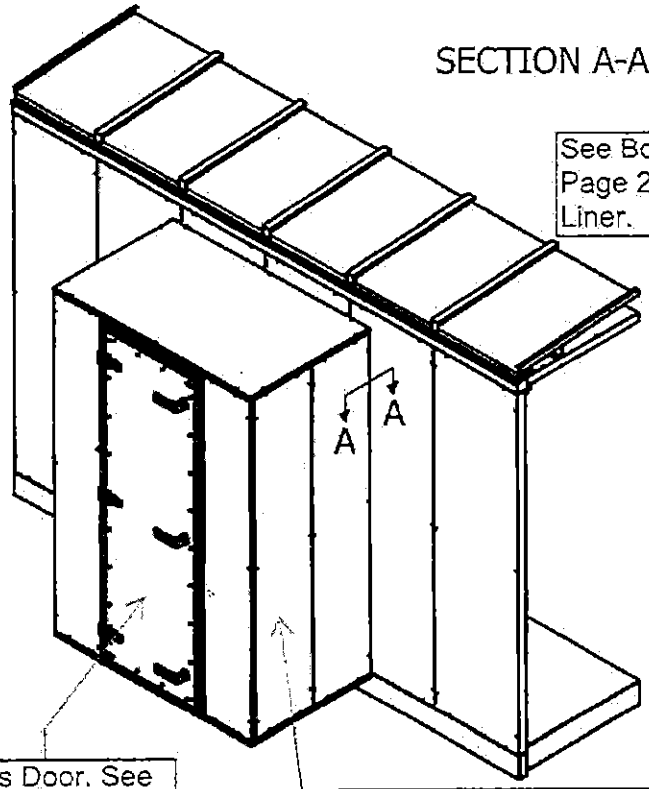

Access Door. See page 1 of 6.

Side and roof are same construction as page 2 and use exterior and interior liner as Box 1 and 2 on sheet 1.

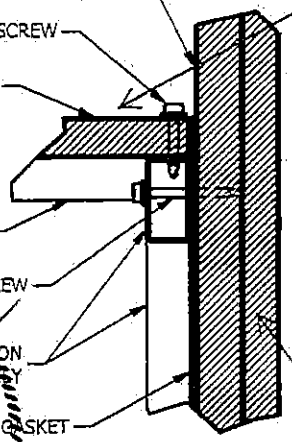

DETAIL B

Floor is built exactly like the roof.

This casing is the same as page 2 of the WF casing. See attached.

PRODUCT REVISED
as complying with the Florida Building Code
Acceptance No 15-0218.10
Expiration Date 10/10/2015
By: [signature]
Miami Dade Product Control

JOHN D. WINSLOW
LICENSE
No. 55841
STATE OF FLORIDA
PROFESSIONAL ENGINEER

Temtrol
a Nortek Air Solutions Brand
15 EAST OKLAHOMA AVENUE OKARCHE, OK 73762
PH: (405) 263-7286 FAX: (405) 263-4924

THE CONTENTS OF THIS DOCUMENT, ANY INFORMATION, SPECIFICATION, AND/OR CONCEPT REPRESENTED HEREIN, ARE CONFIDENTIAL, COPYRIGHTED, AND PROPERTY OF NORTEK AIR SOLUTIONS, DBA TEMTROL BRAND. DISTRIBUTION AND/OR PUBLICATION MUST BE APPROVED BY THE DIRECTOR OF ENGINEERING OR DESIGNEE

Title: DETAIL, VFD COMPARTMENT, EXTERNAL, WF

4-17-15

DRAWING NO. 221.00048B

VFD ENCLOSURE IS ATTACHED TO THE SIDE OF THE NOA CERTIFIED UNIT USING 1/4" SCREWS RATED AT 880 lbs. PULL-OUT STRENGTH EACH.
MAXIMUM SCREW SPACING 16" O.C.
ALL ATTACHMENT HARDWARE AND MATERIALS ARE PROVIDED BY TEMTROL.

PRODUCT REVISED
as complying with the Florida
Building Code
Acceptance No 15-0218.10
Expiration Date 10/10/2015
By
Miami Dade Product Control

JOHN D. WINSLOW
LICENSE
No. 55841
STATE OF
FLORIDA
PROFESSIONAL ENGINEER

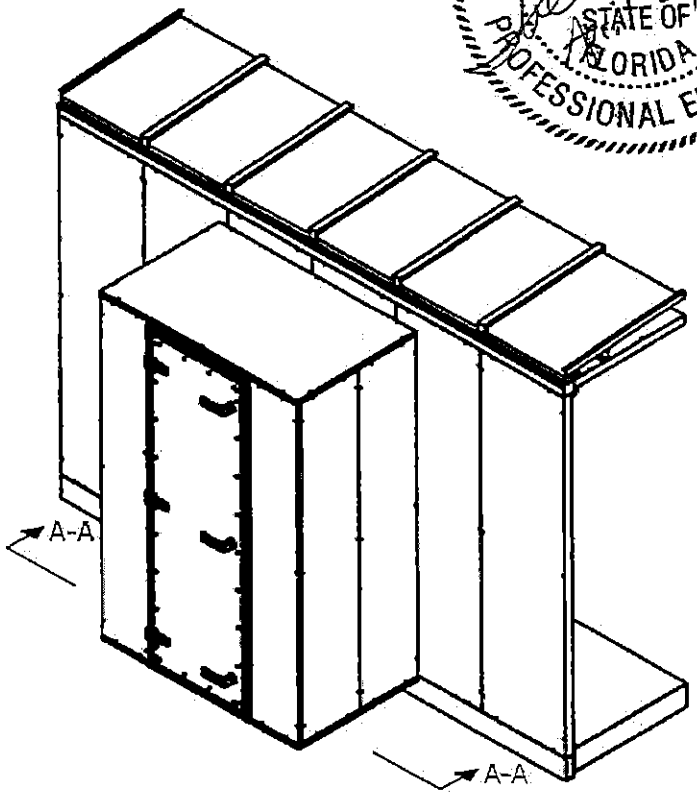

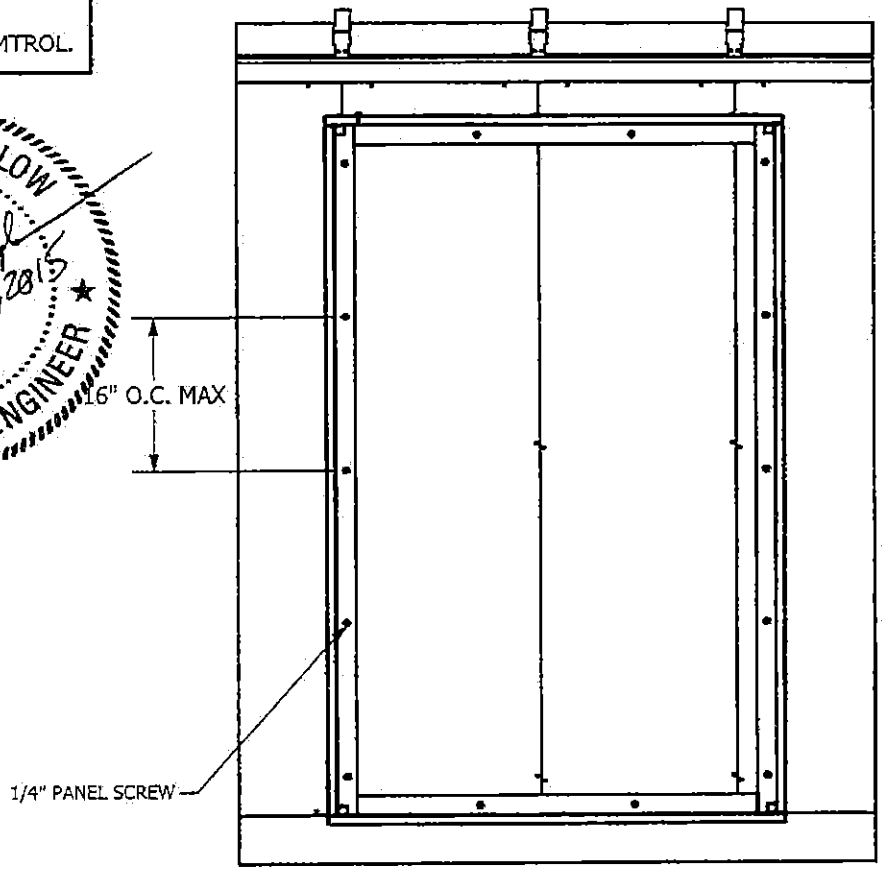

SECTION A-A

Temtrol
a Nortek Air Solutions Brand
15 EAST OKLAHOMA AVENUE OKARCHE, OK 73762
PH: (405) 263-7286 FAX: (405) 263-4924

THE CONTENTS OF THIS DOCUMENT, ANY INFORMATION, SPECIFICATION, AND/OR CONCEPT REPRESENTED HEREIN, ARE CONFIDENTIAL, COPYRIGHTED, AND PROPERTY OF NORTEKAIR SOLUTIONS DBA TEMTROL BRAND. DISTRIBUTION AND/OR PUBLICATION MUST BE APPROVED BY THE DIRECTOR OF ENGINEERING OR DESIGNEE

File Saved:

Title: DETAIL, SCREW SPACING, VFD COMPARTMENT, EXTERNAL

4-17-15

DRAWING NO. 221.00054