MIAMI-DADE COUNTY

DEPARTMENT OF REGULATORY AND ECONOMIC RESOURCES (RER)
BOARD AND CODE ADMINISTRATION DIVISION

MIAMI-DADE COUNTY
PRODUCT CONTROL SECTION
11805 SW 26 Street, Room 208
Miami, Florida 33175-2474
T (786) 315-2590 F (786) 315-2599
www.miamidade.gov/economy

# NOTICE OF ACCEPTANCE (NOA)

**Tallahassee Roofing, Inc.**
**5521 Tower Road**
**Tallahassee, FL. 32303**

## SCOPE:

This NOA is being issued under the applicable rules and regulations governing the use of construction materials. The documentation submitted has been reviewed and accepted by Miami-Dade County RER - Product Control Section to be used in Miami Dade County and other areas where allowed by the Authority Having Jurisdiction (AHJ).

This NOA shall not be valid after the expiration date stated below. The Miami-Dade County Product Control Section (In Miami Dade County) and/or the AHJ (in areas other than Miami Dade County) reserve the right to have this product or material tested for quality assurance purposes. If this product or material fails to perform in the accepted manner, the manufacturer will incur the expense of such testing and the AHJ may immediately revoke, modify, or suspend the use of such product or material within their jurisdiction. RER reserves the right to revoke this acceptance, if it is determined by Miami-Dade County Product Control Section that this product or material fails to meet the requirements of the applicable building code.
This product is approved as described herein, and has been designed to comply with the Florida Building Code including the High Velocity Hurricane Zone of the Florida Building Code.

**DESCRIPTION: Tite-Loc Plus 24 Gage x 16" and 18" Wide Steel Panel over Steel Deck**

**LABELING:** Each unit shall bear a permanent label with the manufacturer's name or logo, city, state and following statement: "Miami-Dade County Product Control Approved", unless otherwise noted herein.

**RENEWAL** of this NOA shall be considered after a renewal application has been filed and there has been no change in the applicable building code negatively affecting the performance of this product.

**TERMINATION** of this NOA will occur after the expiration date or if there has been a revision or change in the materials, use, and/or manufacture of the product or process. Misuse of this NOA as an endorsement of any product, for sales, advertising or any other purposes shall automatically terminate this NOA. Failure to comply with any section of this NOA shall be cause for termination and removal of NOA.

**ADVERTISEMENT:** The NOA number preceded by the words Miami-Dade County, Florida, and followed by the expiration date may be displayed in advertising literature. If any portion of the NOA is displayed, then it shall be done in its entirety.

**INSPECTION:** A copy of this entire NOA shall be provided to the user by the manufacturer or its distributors and shall be available for inspection at the job site at the request of the Building Official.

This NOA consists of pages 1 through 6.
The submitted documentation was reviewed by Carlos M. Utrera, P.E.

MIAMI-DADE COUNTY APPROVED

## ROOFING ASSEMBLY APPROVAL:

| | |
|---|---|
| **Category:** | Roofing |
| **Sub-Category:** | Non-Structural Metal Roofing |
| **Material:** | Steel |
| **Deck Type:** | Steel |
| **Maximum Design Pressure** | **-196.75 psf.** |

## TRADE NAMES OF PRODUCTS MANUFACTURED OR LABELED BY APPLICANT:

| Product | Dimensions | Test Specifications | Product Description |
|---|---|---|---|
| Tite-Loc Plus 24 gage Steel Panel | Length: varies<br>Maximum Width: 16" and 18"<br>Height: 2"<br>Thickness .024"<br>Min. Yield Strength: 60 ksi. | TAS 110 | Valspar Fluropon coated roll formed 24 ga. steel interlocking panels. |
| Tite-Loc Plus Clips | Length: 4.3"<br>Width: 2.145"<br>Height: 2.1"<br>Base Thickness 18ga.<br>Tab Thickness 22ga. | TAS 110 | Galvanized Steel or Stainless steel stamped clips for use with Tite-Loc Plus 24 gage steel panel. |

## EVIDENCE SUBMITTED:

| Test Agency | Test Identifier | Test Name/Report | Date |
|---|---|---|---|
| Architectural Testing | B8437.01-450-18 | TAS 125 | 06/25/12 |
| Architectural Testing Inc. | 74913.01-109-18 | TAS 100 | 08/10/07 |
| Valspar | 433X515 | Salt Spray<br>ASTM B 117 | |
| | 433B173 | Accelerated Weathering<br>ASTM G 23 | |

## APPROVED ASSEMBLIES:

| | |
|---|---|
| **System A:** | Tite-Loc Plus 24ga. x 16" and 18" Wide Steel Panel |
| **Deck Type:** | Steel, Insulated |
| **Deck Description:** | Metal roof deck 22 MSG, G60 coated steel, Minimum 33ksi. |
| **Slope Range:** | 2": 12" or greater |
| **Maximum Uplift Pressure:** | **See Table A below** |

| | |
|---|---|
| **Deck Attachment:** | Minimum 22 gage steel deck shall be secured 6" o.c. to structural supports spaced a maximum of 5 ft. o.c. with one (1) #12 x 2" Hex Washer Head self drilling screws fastened at the bottom of each flute (6" o.c.). Deck sidelaps shall be fastened 6" o.c. with #12 x 2" Hex Head self-drilling screws. |
| **Insulation:** | Minimum ¾" thick maximum 4" thick of an approved rigid board insulation with current NOA having a minimum 20psi compressive strength fastened with approved ¼" pan head self tapping screws long enough to penetrate the deck through a 2-7/8" x 2-7/8" insulation plates. Fastening density shall be in compliance with applicable Building Code and Roofing Application Standard RAS 117. |
| **Coverboard:** | A single layer of ½" DensDeck Roof Board was applied over the insulation fastened with approved #14 pancake head screws long enough to penetrate the steel deck through 3" diameter insulation plates. |
| **Underlayment:** | Quick-Stick HT self-adhering underlayment or any Miami-Dade County Product Control Approved underlayment having a current NOA. |
| **Fire Barrier:** | Any approved fire barrier having a current NOA. Refer to a current fire directory listing for fire ratings of this roofing system assembly as well as the location of the fire barrier within the assembly. See Limitation # 1. |
| **Valleys:** | Valley construction shall be in compliance with Roofing Application Standard RAS 133 and with the current published installation instructions and details in PAC Contractors Association's Roofing Installation Manual. |

**Metal Panels and Accessories:**

Install the " Tite-Loc Plus 24 ga. Steel Panel " panels including flashing penetrations, valleys, end laps and accessories in compliance PAC Contractors Association's current, published installation instructions and in compliance with the minimum requirements detailed in Roofing Application Standard RAS 133.

Tite-Loc panels shall be secured with Tite-Loc Plus clips at a spacing listed below in **Table A**. Clips are to be fastened with a minimum of two #14 x 6" long pan head self-tapping screws of sufficient length to penetrate through the deck at a minimum of ½".

Place the female end of the adjacent panel over the clip/panel male assembly and seam 180° degree. See Detail A herein.

**TABLE A**
**MAXIMUM DESIGN PRESSURES**

| **Roof Areas** | **Field** | **Perimeter and Corner[2]** |
|---|---|---|
| **Maximum Design Pressures** | **–106.75 psf** | **–196.75 psf** |
| **Maximum Clip Spacing** | **24" o.c.** | **6" o.c.** |

1. Extrapolation shall not be allowed

## SYSTEM LIMITATIONS

1. Fire classification is not part of this acceptance; refer to a current Approved Roofing Materials Directory for fire ratings of this product.
2. The maximum designed pressure listed herein shall be applicable to all roof pressure zones (i.e. field, perimeters, and corners). Neither rational analysis, nor extrapolation shall be permitted for enhanced fastening at enhanced pressure zones (i.e. perimeters, extended corners and corners).
3. Panels may be rolls formed in continuous lengths from eave to ridge. Maximum lengths shall be as described in Roofing Application Standard RAS 133.
4. All panels shall be permanently labeled with the manufacturer's name and/or logo, city, state, and the following statement: "Miami-Dade County Product Control Approved" **or** with the Miami-Dade County Product Control Seal as seen below. All clips shall be permanently labeled with the manufacturer's name and/or logo, and/or model.

MIAMI-DADE COUNTY
APPROVED

5. All products listed herein shall have a quality assurance audit in accordance with the Florida Building Code and Rule 61G20-3 of the Florida Administrative Code.
6. Panels may be shop or jobsite roll formed with machine model #**SSQ4250215** from PAC Contractors Association.

## PROFILE DRAWING

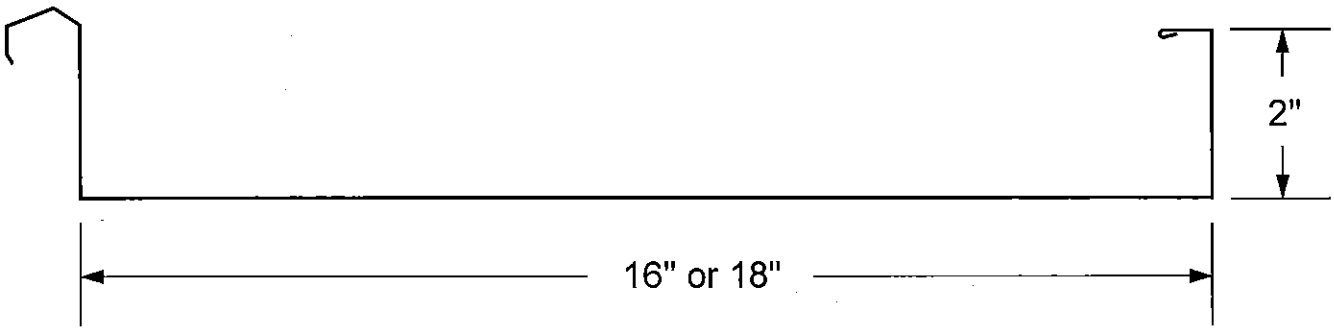


STIFFENING RIBS AND STRIATIONS OPTIONAL

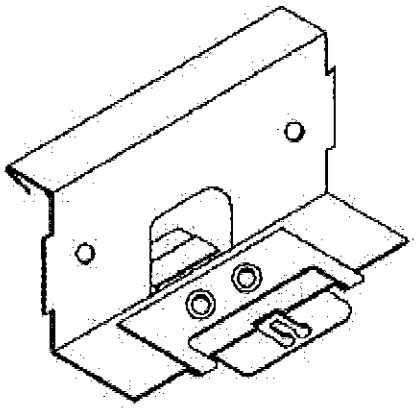

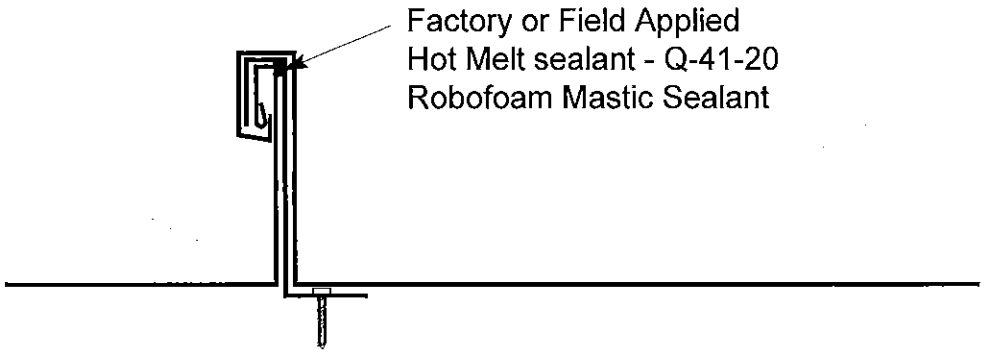


180 DEGREE DOUBLE LOCK

## END OF THIS ACCEPTANCE