MIAMI-DADE COUNTY
PRODUCT CONTROL SECTION
11805 SW 26 Street, Room 208
Miami, Florida 33175-2474
T (786) 315-2590 F (786) 315-2599
www.miamidade.gov/economy

DEPARTMENT OF REGULATORY AND ECONOMIC RESOURCES (RER)
BOARD AND CODE ADMINISTRATION DIVISION

NOTICE OF ACCEPTANCE (NOA)

Labrador & Fundora Corp dba V & V Windows
2355 W 4th Avenue
Hialeah, FL 33010–1454

SCOPE:

This NOA is being issued under the applicable rules and regulations governing the use of construction materials. The documentation submitted has been reviewed and accepted by Miami-Dade County RER -Product Control Section to be used in Miami Dade County and other areas where allowed by the Authority Having Jurisdiction (AHJ).

This NOA shall not be valid after the expiration date stated below. The Miami-Dade County Product Control Section (In Miami Dade County) and/or the AHJ (in areas other than Miami Dade County) reserve the right to have this product or material tested for quality assurance purposes. If this product or material fails to perform in the accepted manner, the manufacturer will incur the expense of such testing and the AHJ may immediately revoke, modify, or suspend the use of such product or material within their jurisdiction. RER reserves the right to revoke this acceptance, if it is determined by Miami-Dade County Product Control Section that this product or material fails to meet the requirements of the applicable building code.

This product is approved as described herein, and has been designed to comply with the Florida Building Code, including the High Velocity Hurricane Zone.

DESCRIPTION: Series "300" Outswing Glazed Aluminum Door w/wo Sidelite or door w/wo Transom-LMI

APPROVAL DOCUMENT: Drawing No. **W10–08 Rev F**, titled "Series Aluminum Out–Swing Entrance Door (L.M.I.)", sheets 1 through 12 of 12, dated 02/24/10 and last revised on SEP 03, 2015, prepared by Al–Farooq Corporation, signed and sealed by Javad Ahmad, P. E., bearing the Miami–Dade County Product Control Revision stamp with the Notice of Acceptance number and Expiration date by the Miami–Dade County Product Control Section.

MISSILE IMPACT RATING: Large and Small Missile Impact

Limitations:

1. See Design Pressure (DP) ratings in sheets **3, 4 & 5** for unit sizes Vs glass type. Lower Design Pressure from doors or mullion shall control when doors are mulled (w/wo Reinforcements).
2. Door w/ transom is limited to max. 25-1/2" h Transom.
3. The maximum positive exterior DP shall be + 66.30 PSF, where water infiltration requirement is needed.
4. Glass lite wider than 36" shall be supported with approved setting blocks or clamps per FBC requirements.
5. The frame are of alternate size must not exceed 960113.02 ft^2, nor panel tested area and max. Panel height.

LABELING: Each unit shall bear a permanent label with the manufacturer's name or logo, city, state and series and following statement: "Miami-Dade County Product Control Approved", noted herein.

RENEWAL of this NOA shall be considered after a renewal application has been filed and there has been no change in the applicable building code negatively affecting the performance of this product.

TERMINATION of this NOA will occur after the expiration date or if there has been a revision or change in the materials, use, and/or manufacture of the product or process. Misuse of this NOA as an endorsement of any product, for sales, advertising or any other purposes shall automatically terminate this NOA. Failure to comply with any section of this NOA shall be cause for termination and removal of NOA.

ADVERTISEMENT: The NOA number preceded by the words Miami-Dade County, Florida, and followed by the expiration date may be displayed in advertising literature. If any portion of the NOA is displayed, then it shall be done in its entirety.

INSPECTION: A copy of this entire NOA shall be provided to the user by the manufacturer or its distributors and shall be available for inspection at the job site at the request of the Building Official.

This NOA **renews & revises # 12-0113.02** consists of this page 1 and evidence pages E-1, as well as approval document mentioned above.

The submitted documentation was reviewed by **Ishaq I. Chanda, P.E.**

MIAMI-DADE COUNTY APPROVED

9/4/15

Labrador & Fundora Corp dba V & V Windows

NOTICE OF ACCEPTANCE: EVIDENCE SUBMITTED

A. DRAWINGS

1. Manufacturer's die drawings and sections (Submitted under files below).
2. Drawing No. **W10–08 Rev F**, titled "Series Aluminum Out–Swing Entrance Door (L.M.I.)", sheets 1 through 12 of 12, dated 02/24/10 and last revised on SEP 03, 2015, prepared by Al-Farooq Corporation, signed and sealed by Javad Ahmad, P.E.

B. TESTS (Submitted under files **#12-0113.02/#10–0406.04**)

1. Test reports on: 1) Air Infiltration Test, per FBC, TAS 202-94
   2) Uniform Static Air Pressure Test, Loading per FBC TAS 202-94
   3) Water Resistance Test, per FBC, TAS 202-94(+50.0 PSF, sill S-I only)
   4) Large Missile Impact Test per FBC, TAS 201-94
   5) Cyclic Wind Pressure Loading per FBC, TAS 203-94
   6) Forced Entry Test, per FBC 2411 3.2.1, TAS 202-94

along with marked–up drawings and installation diagram of an Aluminum outswing French doors w/wo sidelite and door w/Transom & sidelites, prepared by American Test Lab of South Florida, Inc., Test Report No. **ATLSF–0403.02–08**, dated 01/18/10, signed and sealed by William R. Mehner, P. E., Henry Hattem, P. E. and Edmundo J. Largaespada, P. E.

C. CALCULATIONS

1. Anchor verification calculations and structural analysis, complying with FBC-2014(**5th Edition**), prepared by Al Farooq Corporation, dated 02/18/15 and last revised on AUG 13, 2015, signed and sealed by Javad Ahmad, P.E.
2. Glazing complies w/ ASTME-1300-02, 04 and -09

D. QUALITY ASSURANCE

1. Miami Dade Department of Regulatory and Economic Resources (RER).

E. MATERIAL CERTIFICATIONS

1. Notice of Acceptance No. **14-0916.10** issued to **Kuraray America, Inc.** (former E.I. Dupont) for their **"Butacite® PVB Glass Interlayer"**, expiring on 12/11/16

F. STATEMENTS

1. Statement letter of conformance to FBC 2014(**5th Edition**) and letter of no financial interest, prepared by Al Farooq Corporation, dated 02/11/15, signed and sealed by Javad Ahmad, P.E.
2. Lab compliance and addendum letters, as part of the above referenced test reports.
3. Asset purchase agreement dated July 28, 2009, signed by Mr. David Labrador and Mr. Candido D. Vega.*(Submitted under previous NOA No. **10–0406.04**)*
4. Florida Department Of State, Div of Corporation, active listing of Labrador & Foundora Corporation, dated 05/07/19985.
5. Florida Department of State, active fictitious name listing of V& V Windows, dated 08/13/15.

G. OTHER

1. This NOA **revises & renews # 12-0113.02**, expired on 09/01/15.
2. Test proposals **#07-3564** & test proposal dated 10/20/08 approved by BCCO.

Ishaq I. Chanda

Ishaq I. Chanda, P.E.
Product Control Examiner
NOA No 15-0310.05
Expiration Date: September 01, 2020
Approval Date: September 10 , 2015

PRODUCT REVISED
as complying with the Florida
Building Code
Acceptance No. 15-0310.05
Expiration Date SEPT. 1, 2020
By [signature]
Miami Dade Product Control

THESE DOORS ARE RATED FOR LARGE & SMALL MISSILE IMPACT.
SHUTTERS ARE NOT REQUIRED.

ALUMINUM OUTSWING ENTRANCE DOOR

SINGLE (X) AND DOUBLE (XX) LEAF DOORS W/O TRANSOM SEE SHEET 2.
SINGLE (O/X) AND DOUBLE (O/XX) LEAF DOORS WITH TRANSOMS SEE SHEET 3.
SINGLE (O) SIDELITE SEE SHEET 4.
SINGLE AND DOUBLE LEAF DOORS WITH SIDELITES SEE SHEET 5.
LOWER VALUES FROM DOOR CAPACITY CAHRT, SIDELITE CAPACITY CHART OR SIDELITE MULLION CAPACITY CHART WILL APPLY TO ENTIRE SYSTEM.

DOORS APPROVED FOR INSTALLATIONS WHERE WATER INFILTRATION RESISTANCE IS REQUIRED.

THIS PRODUCT HAS BEEN DESIGNED AND TESTED TO COMPLY WITH THE REQUIREMENTS OF THE FLORIDA BUILDING CODE INCLUDING HIGH VELOCITY HURRICANE ZONE (HVHZ).

1BY OR 2BY WOOD BUCKS BY OTHERS, MUST BE ANCHORED PROPERLY TO TRANSFER LOADS TO THE STRUCTURE.

ANCHORS SHALL BE AS LISTED, SPACED AS SHOWN ON DETAILS, ANCHORS EMBEDMENT TO BASE MATERIAL SHALL BE BEYOND WALL DRESSING OR STUCCO.

ANCHORING OR LOADING CONDITIONS NOT SHOWN IN THESE DETAILS ARE NOT PART OF THIS APPROVAL.

A LOAD DURATION INCREASE IS USED IN DESIGN OF ANCHORS INTO WOOD ONLY.

ALL SHIMS TO BE HIGH IMPACT, NON-METALLIC AND NON-COMPRESSIBLE.

MATERIALS INCLUDING BUT NOT LIMITED TO STEEL/METAL SCREWS, THAT COME INTO CONTACT WITH OTHER DISSIMILAR MATERIALS SHALL MEET THE REQUIREMENTS OF THE FLORIDA BUILDING CODE.

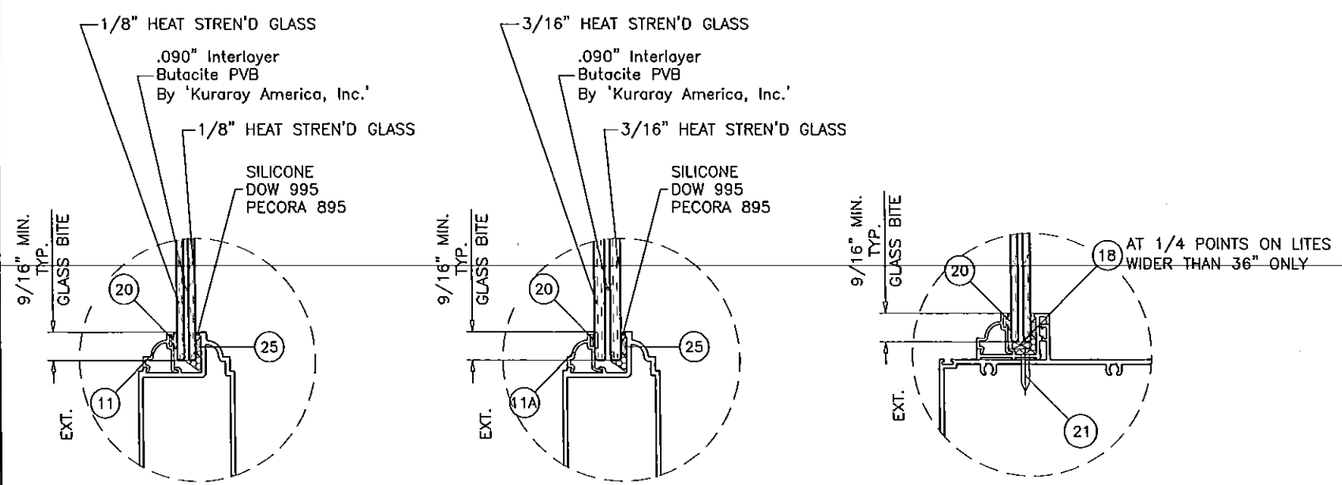

GLASS TYPE 'A'
5/16" OVERALL LAM. GLASS

GLASS TYPE 'B'
7/16" OVERALL LAM. GLASS

GLAZING DETAIL
AT SIDELITE/TRANSOM

GLAZING OPTIONS

Engr: JAVAD AHMAD
CIVIL
FLA. PE # 70592
C.A.N. 3538
SEP 03 2015

AL-FAROOQ CORPORATION
ENGINEERS & PRODUCT DEVELOPMENT
1235 S.W. 87 AVE
MIAMI, FLORIDA 33174
TEL. (305) 264-8100 FAX. (305) 262-6978

COMP-ANL\W10-08V

ALUMINUM OUT-SWING ENTRANCE DOOR (L.M.I.)

Labrador & Fundora Corp.
dba-V & V Windows
2355 West 4th Ave.
Hialeah, Fl. 33010
TEL. (305) 888-4151 FAX. (305) 888-1042

revisions:

no	date	by	description
C	11.22.11		UPDATED TO 2010 FBC
D	02.12.15		UPDATED TO 2014 FBC
E	07.31.15		REV. PER RER COMMENTS
F	09.03.15		NO CHANGE THIS SHEET

date: 02-24-10
scale: 1/2"=1'-0"
dr. by: HAMID
chk. by:

drawing no.
W10-08

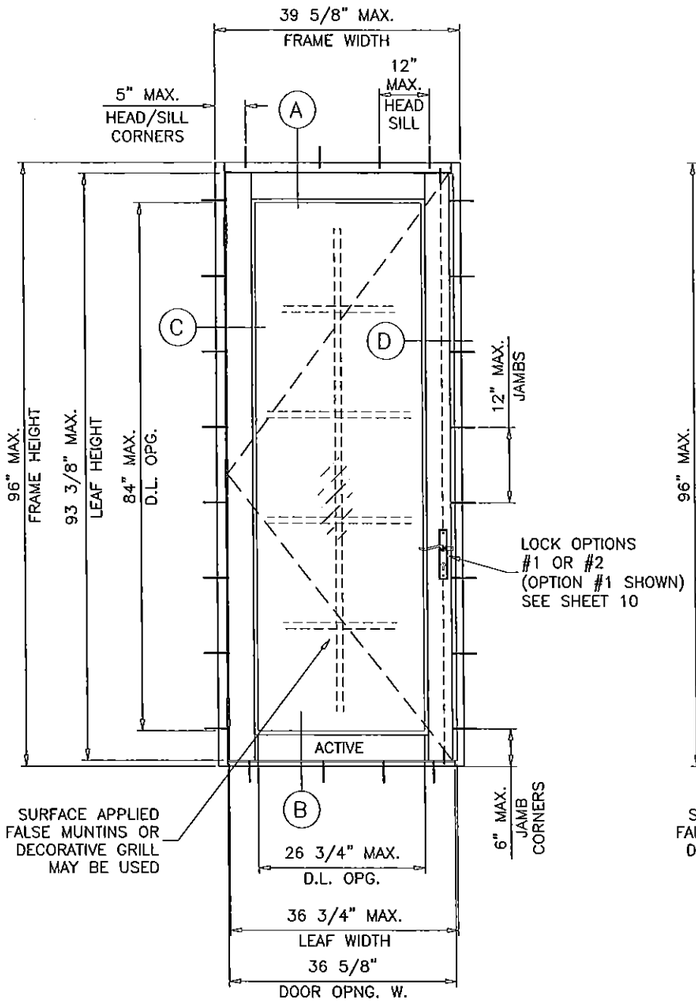

(X)

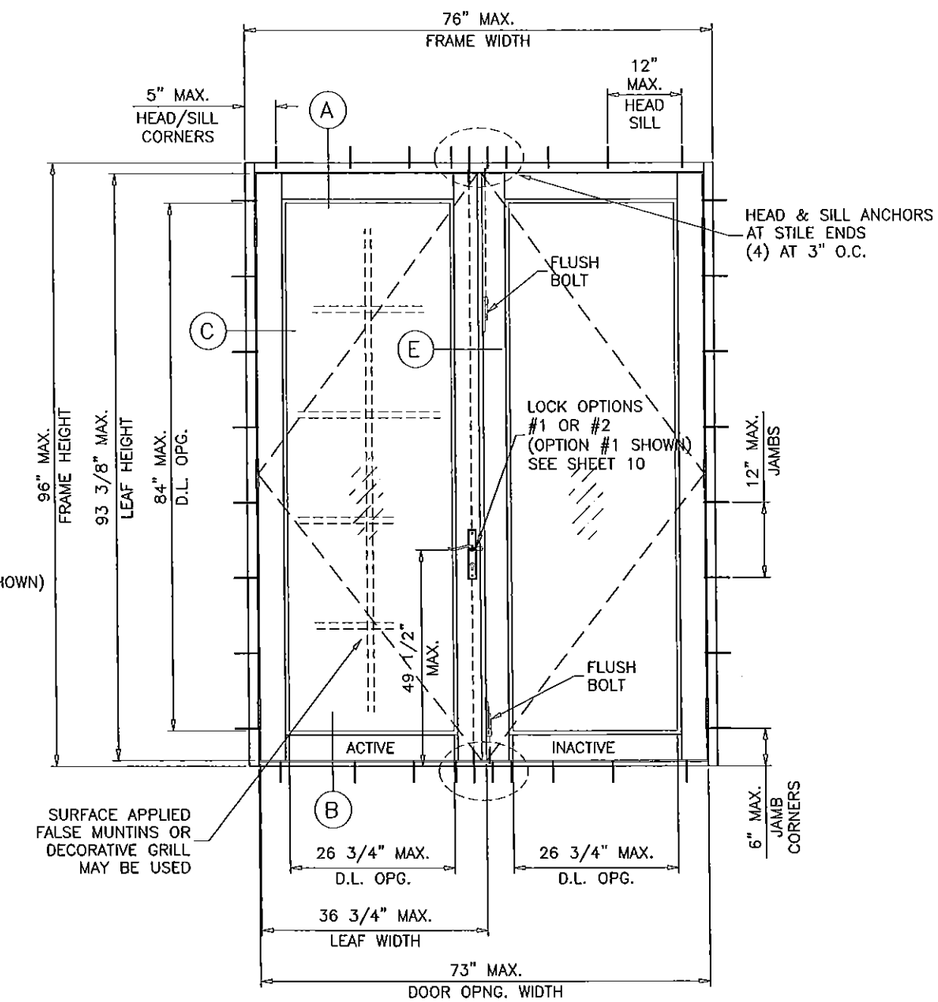

(XX)

DOORS LOAD CAPACITY – PSF SINGLE DOORS WITHOUT TRANSOM (X)							
DOOR DIMS.				GLASS TYPE 'A'		GLASS TYPE 'B'	
FRAME WIDTH	LEAF WIDTH	FRAME HEIGHT	LEAF HEIGHT	EXT.(+)	INT.(–)	EXT.(+)	INT.(–)
37–5/8"	34–3/4"	96"	93–3/8"	70.0	80.0	70.0	80.0
39–5/8"	36–3/4"			66.3	75.8	66.3	75.8

DOORS LOAD CAPACITY – PSF DOUBLE DOORS WITHOUT TRANSOM (XX)							
DOOR DIMS.				GLASS TYPE 'A'		GLASS TYPE 'B'	
FRAME WIDTH	LEAF WIDTH	FRAME HEIGHT	LEAF HEIGHT	EXT.(+)	INT.(–)	EXT.(+)	INT.(–)
72"	34–3/4"	96"	93–3/8"	70.0	80.0	70.0	80.0
76"	36–3/4"			66.3	75.8	66.3	75.8

NOTE:
GLASS CAPACITIES ON THIS SHEET ARE BASED ON ASTM E1300–09 (3 SEC. GUSTS) AND FLORIDA BUILDING COMMISSION DECLARATORY STATEMENT DCA05–DEC–219

GLASS D.L.O. DIMS.

D.L.O. HEIGHT = FRAME HEIGHT – 12"
D.L.O. WIDTH (X DOORS) = FRAME WIDTH – 12.875"
D.L.O. WIDTH (XX DOORS) = (FRAME WIDTH – 22.50")/2

PRODUCT REVISED
as complying with the Florida
Building Code
Acceptance No. 15-0310.05
Expiration Date 9/1/20
By [signature]
Miami Dade Product Control

Engr: JAVAD AHMAD
CIVIL
FLA. PE # 70592
C.A.N. 3538

SEP 03 2015

AL-FAROOQ CORPORATION
ENGINEERS & PRODUCT DEVELOPMENT
1235 S.W. 87 AVE
MIAMI, FLORIDA 33174
TEL. (305) 264-8100 FAX. (305) 262-6978

COMP-ANL\W10-08VV

ALUMINUM OUT-SWING ENTRANCE DOOR (L.M.I.)

Labrador & Fundora Corp.
dba-V & V Windows
2355 West 4th Ave.
Hialeah, Fl. 33010
TEL. (305) 888-4151 FAX. (305) 888-1042

revisions:

no	date	by	description
C	11.22.11		NO CHANGE THIS SHEET
D	02.12.15		UPDATED TO 2014 FBC
E	07.31.15		REV. PER RER COMMENTS
F	09.03.15		REV. PER RER COMMENTS

date: 02-24-10
scale: 1/2"=1'-0"
dr. by: HAMID
chk. by:

drawing no.
W10-08

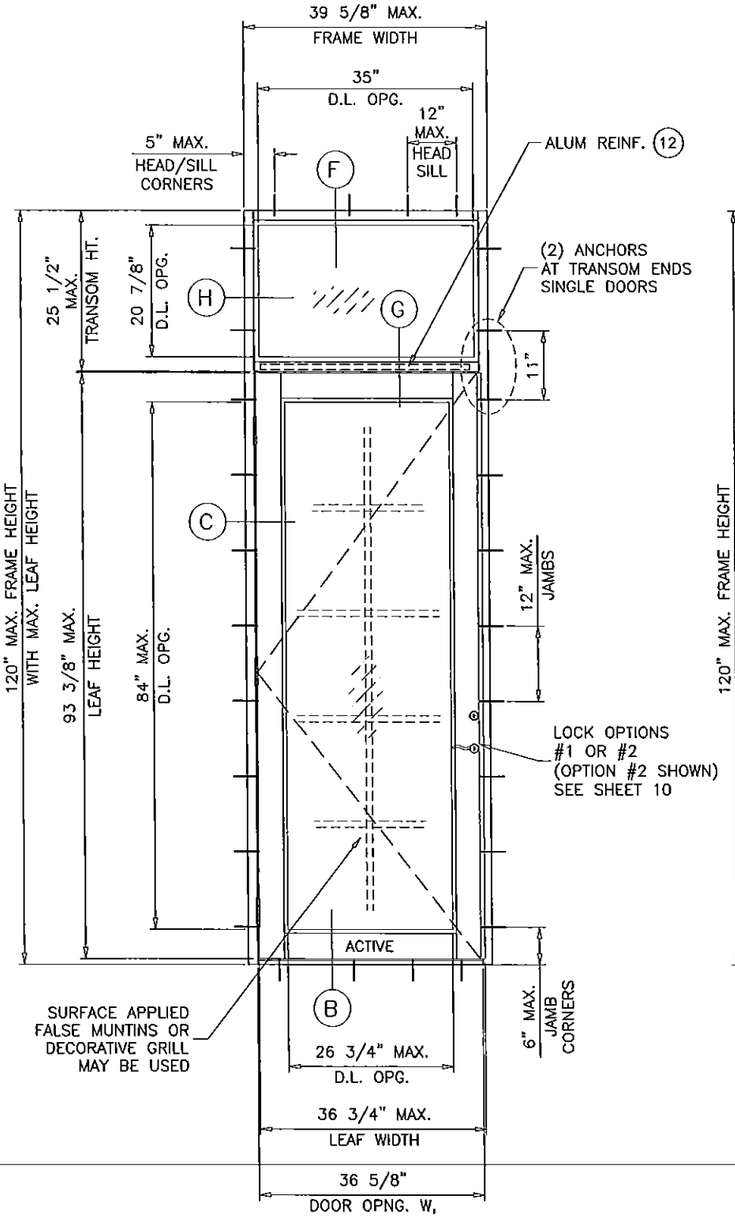

(O/X)

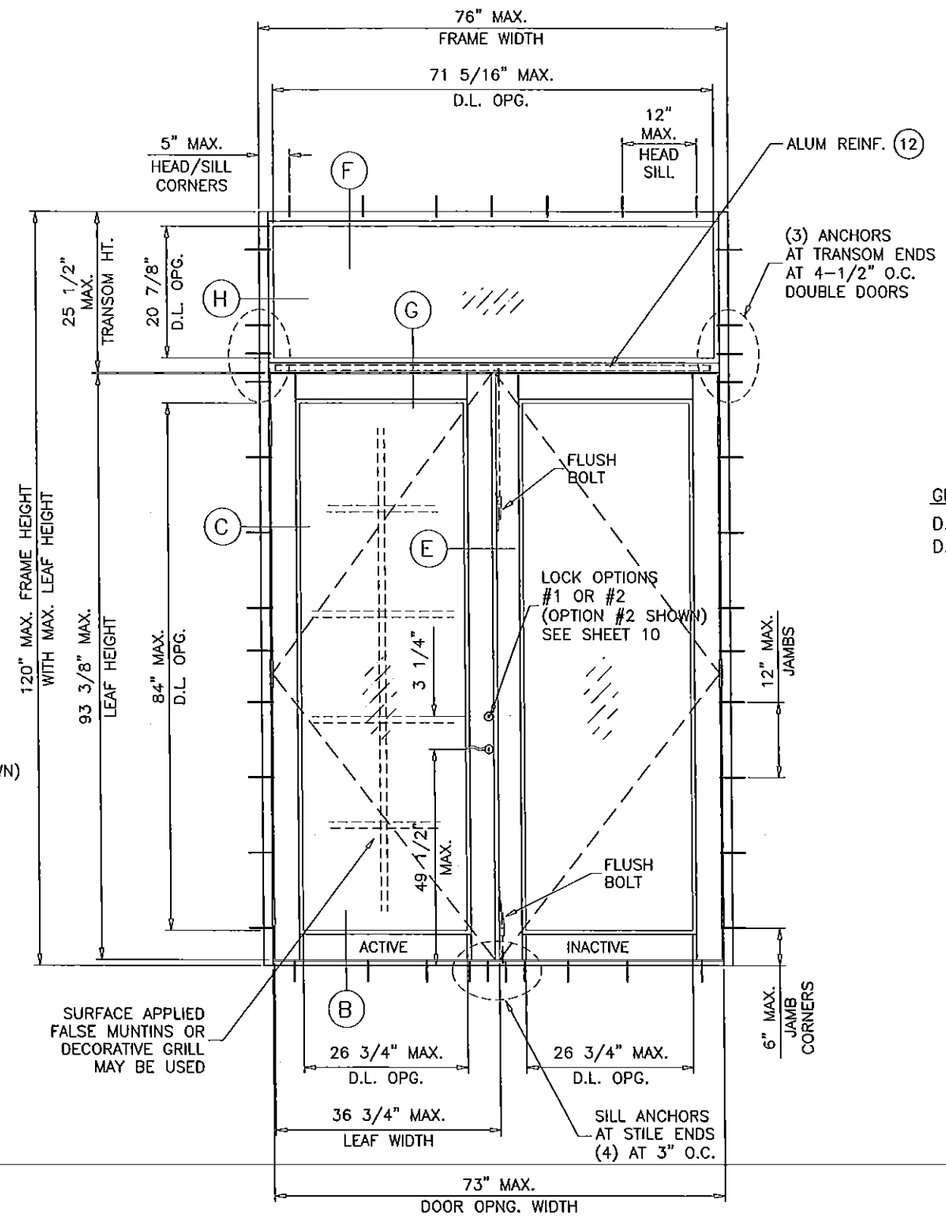

(O/XX)

GLASS D.L.O. DIMS. (TRANSOM)

D.L.O. HEIGHT = TRANSOM HEIGHT – 4.625"
D.L.O. WIDTH = FRAME WIDTH – 4.6875"

PRODUCT REVISED
as complying with the Florida Building Code
Acceptance No. 15-0310.06
Expiration Date 9/1/20
By: [illegible]
Manual Date/Product Control

NOTE:
GLASS CAPACITIES ON THIS SHEET ARE BASED ON ASTM E1300-09 (3 SEC. GUSTS) AND FLORIDA BUILDING COMMISSION DECLARATORY STATEMENT DCA05-DEC-219

DOORS LOAD CAPACITY – PSF SINGLE DOORS WITH TRANSOM (O/X)							
DOOR DIMS.				GLASS TYPE 'A'		GLASS TYPE 'B'	
FRAME WIDTH	LEAF WIDTH	FRAME HEIGHT	LEAF HEIGHT	EXT.(+)	INT.(–)	EXT.(+)	INT.(–)
37-5/8"	34-3/4"	120"	93-3/8"	70.0	80.0	70.0	80.0
39-5/8"	36-3/4"			66.3	75.8	66.3	75.8

DOORS LOAD CAPACITY – PSF DOUBLE DOORS WITH TRANSOM (O/XX)							
DOOR DIMS.				GLASS TYPE 'A'		GLASS TYPE 'B'	
FRAME WIDTH	LEAF WIDTH	FRAME HEIGHT	LEAF HEIGHT	EXT.(+)	INT.(–)	EXT.(+)	INT.(–)
72"	34-3/4"	120"	93-3/8"	70.0	80.0	70.0	80.0
76"	36-3/4"			66.3	75.8	66.3	75.8

Engr: JAVAD AHMAD
CIVIL
FLA. PE # 70592
C.A.N. 3538
SEP 03 2015

AL-FAROOQ CORPORATION
ENGINEERS & PRODUCT DEVELOPMENT
1235 S.W. 87 AVE
MIAMI, FLORIDA 33174
TEL (305) 264-8100 FAX. (305) 262-6978
COMP-ANL\W10-08W

ALUMINUM OUT-SWING ENTRANCE DOOR (L.M.I.)

Labrador & Fundora Corp.
dba-V & V Windows
2355 West 4th Ave.
Hialeah, Fl. 33010
TEL. (305) 888-4151 FAX. (305) 888-1042

revisions:			
no	date	by	description
C	11.22.11		NO CHANGE THIS SHEET
D	02.12.15		UPDATED TO 2014 FBC
E	07.31.15		REV. PER RER COMMENTS
F	09.03.15		REV. PER RER COMMENTS

date: 02-24-10
scale: 1/2"=1'-0"
dr. by: HAMID
chk. by:

drawing no. W10-08

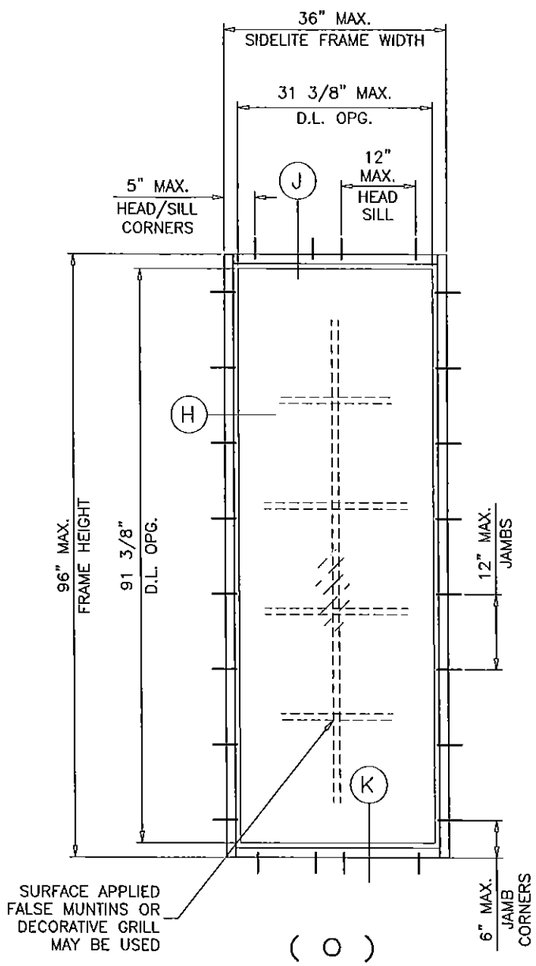

FIXED LITE (O) LOAD CAPACITY – PSF			
FIXED LITE DIMS.		GLASS TYPES 'A' & 'B'	
FRAME WIDTH	FRAME HEIGHT	EXT.(+)	INT.(–)
24"	90"	70.0	80.0
28"		70.0	80.0
32"		70.0	80.0
36"		70.0	80.0
24"	96"	70.0	75.6
28"		70.0	71.2
32"		67.4	67.4
36"		64.1	64.1

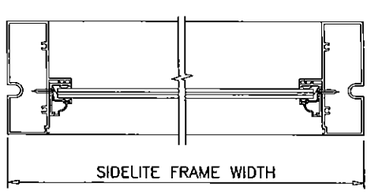

GLASS D.L.O. DIMS. (SIDELITE)

D.L.O. HEIGHT = SIDELITE HEIGHT – 4.625"
D.L.O. WIDTH = SIDELITE WIDTH – 4.625"

PRODUCT REVISED
as complying with the Florida
Building Code
Acceptance No. 15-0310.05
Expiration Date 9/1/20
By Isaac I. Chang
Miami Dade Product Control

NOTE:
GLASS CAPACITIES ON THIS SHEET ARE BASED ON ASTM E1300–09 (3 SEC. GUSTS) AND FLORIDA BUILDING COMMISSION DECLARATORY STATEMENT DCA05–DEC–219

Engr: JAVAD AHMAD
CIVIL
FLA. PE # 70592
C.A.N. 3538
SEP 03 2015

AL-FAROOQ CORPORATION
ENGINEERS & PRODUCT DEVELOPMENT
1235 S.W. 87 AVE
MIAMI, FLORIDA 33174
TEL. (305) 264-8100 FAX. (305) 262-6978
COMP-ANL\W10-08VV

ALUMINUM OUT-SWING ENTRANCE DOOR (L.M.I.)

Labrador & Fundora Corp.
dba-V & V Windows
2355 West 4th Ave.
Hialeah, Fl. 33010
TEL. (305) 888-4151 FAX. (305) 888-1042

revisions:

no	date	by	description
C	11.22.11		NO CHANGE THIS SHEET
D	02.12.15		UPDATED TO 2014 FBC
E	07.31.15		REV. PER RER COMMENTS
F	09.03.15		REV. PER RER COMMENTS

date: 02-24-10
scale: 1/2"=1'-0"
dr. by: HAMID
chk. by:

drawing no.
W10-08

SIDELITE MULLION CAPACITY – PSF SIDELITES WITH SINGLE OR DOUBLE LEAF DOORS WITHOUT TRANSOM						
NOMINAL SIDELITE WIDTH INCHES	LEAF WIDTH INCHES	FRAME HEIGHT INCHES	SIDELITE W/O REINF.		SIDELITE W/ ALUM REINF.	
			EXT.(+)	INT.(–)	EXT.(+)	INT.(–)
24	36–3/4	80	70.0	80.0	70.0	80.0
28			70.0	80.0	70.0	80.0
32			70.0	80.0	70.0	80.0
36			70.0	80.0	70.0	80.0
40			63.0	72.0	63.0	72.0
24	36–3/4	84	70.0	80.0	70.0	80.0
28			70.0	80.0	70.0	80.0
32			70.0	80.0	70.0	80.0
36			70.0	80.0	70.0	80.0
40			63.0	72.0	63.0	72.0
24	36–3/4	90	70.0	80.0	70.0	80.0
28			70.0	80.0	70.0	80.0
32			70.0	80.0	70.0	80.0
36			70.0	80.0	70.0	80.0
24	36–3/4	96	70.0	75.6	70.0	80.0
28			70.0	71.2	70.0	80.0
32			67.4	67.4	70.0	80.0
36			64.1	64.1	70.0	80.0

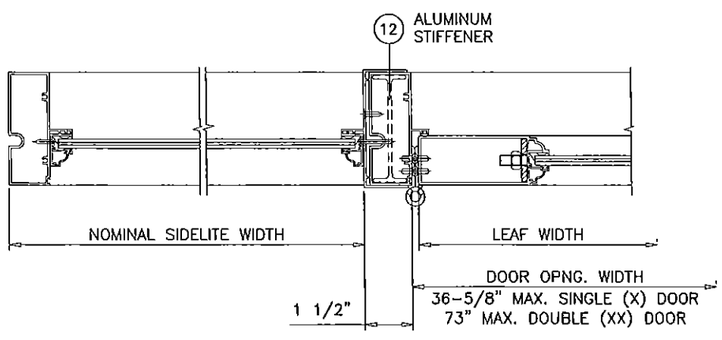

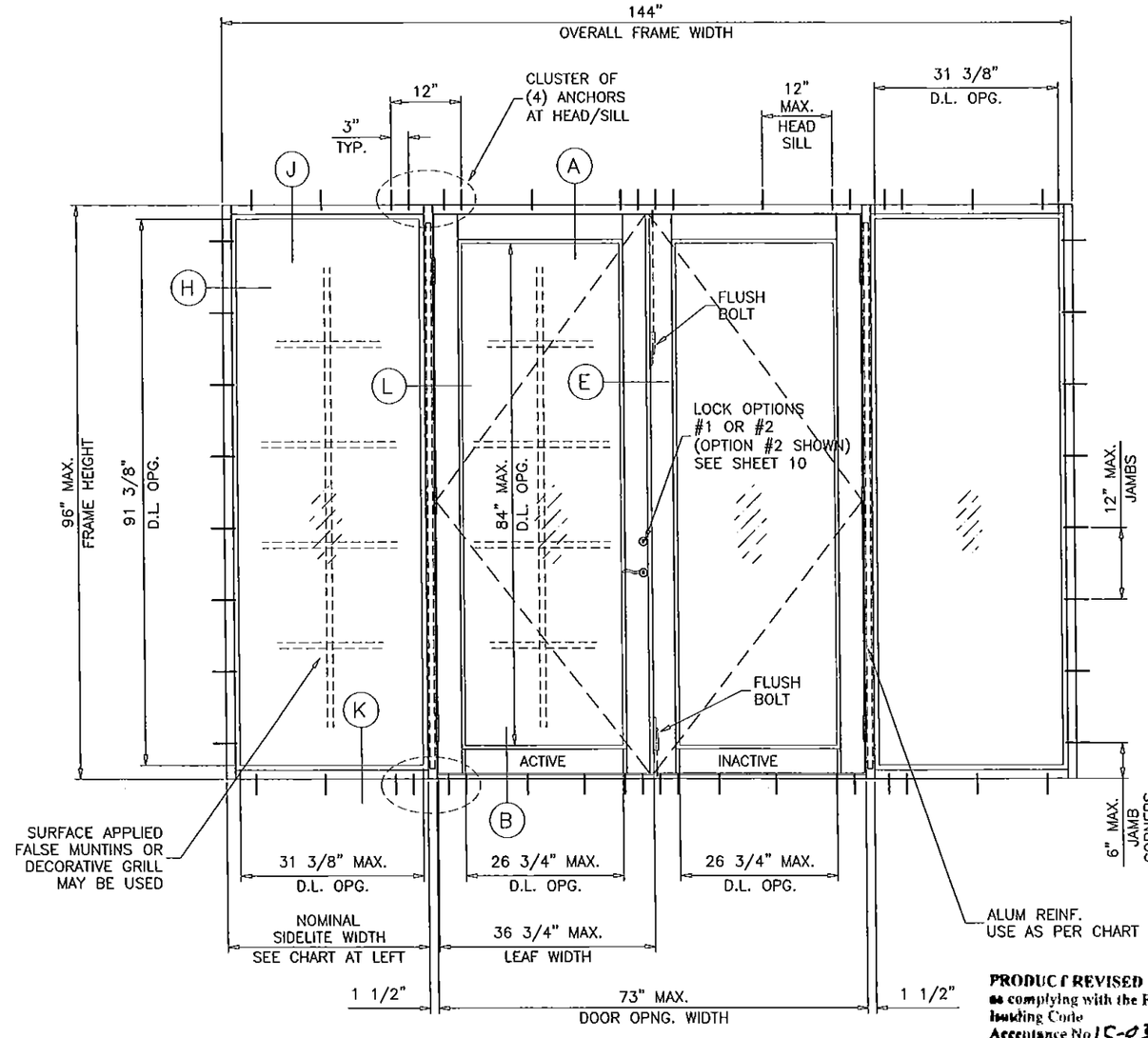

(OXXO) TESTED

OX, XO, OXX OR XXO CONFIGURATIONS ALSO QUALIFY

MAX. UNIT TESTED FRAME AREA NOT TO EXCEED 96 SQ. FT. PER FBC 2014

PRODUCT REVISED
as complying with the Florida Building Code
Acceptance No. 15-0310.05
Expiration Date 9/1/20
By [signature]
Miami Dade Product Control

NOTE:
FOR DOORS CAPACITIES SEE SHEET 2.
FOR SIDELITE CAPACITIES SEE SHEET 4
FOR SIDELITE MULLION CAPACITY SEE CHART ABOVE
LOWER VALUES FROM DOOR, SIDELITE OR MULLION CHART
WILL APPLY TO ENTIRE SYSTEM.

NOTE:
GLASS CAPACITIES ON THIS SHEET ARE
BASED ON ASTM E1300–09 (3 SEC. GUSTS)
AND FLORIDA BUILDING COMMISSION
DECLARATORY STATEMENT DCA05–DEC–219

Engr: JAVAD AHMAD
CIVIL
FLA. PE # 70592
C.A.N. 3538
SEP 03 2015

AL-FAROOQ CORPORATION
ENGINEERS & PRODUCT DEVELOPMENT
1235 S.W. 87 AVE
MIAMI, FLORIDA 33174
TEL. (305) 264-8100 FAX. (305) 262-6978

COMP–ANL\W10–08VV

ALUMINUM OUT–SWING ENTRANCE DOOR (L.M.I.)

Labrador & Fundora Corp.
dba–V & V Windows
2355 West 4th Ave.
Hialeah, Fl. 33010
TEL (305) 888–4151 FAX. (305) 888–1042

revisions:

no	date	by	description
C	11.22.11		NO CHANGE THIS SHEET
D	02.12.15		UPDATED TO 2014 FBC
E	07.31.15		REV. PER RER COMMENTS
F	09.03.15		REV. PER RER COMMENTS

date: 02–24–10
scale: 1/2"=1'–0"
dr. by: HAMID
chk. by:

drawing no.
W10–08

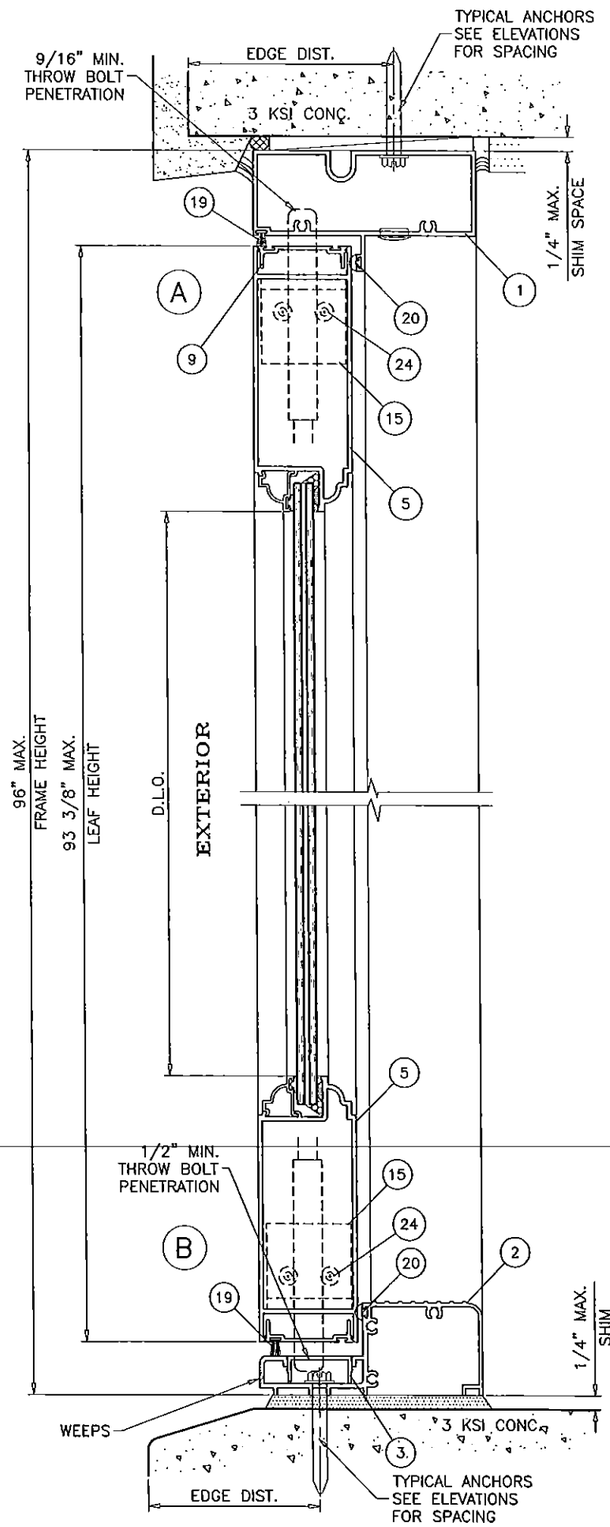

OPERABLE UNIT

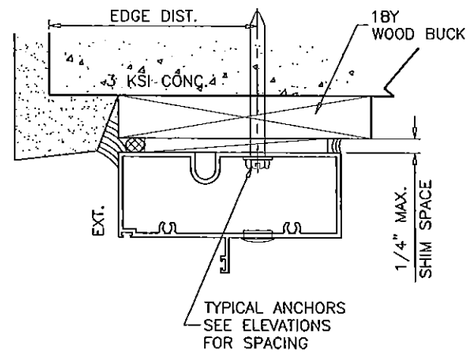

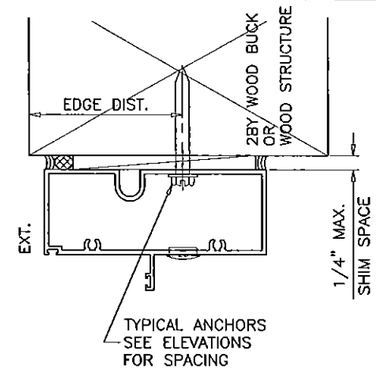

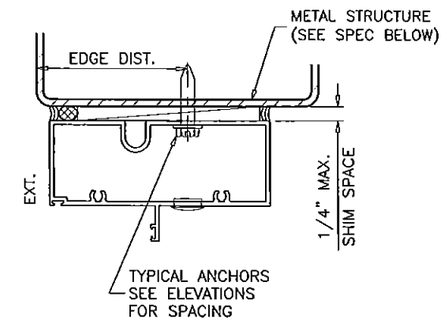

WOOD BUCKS AND METAL STRUCTURE NOT BY V & V WINDOWS MUST SUSTAIN LOADS IMPOSED BY GLAZING SYSTEM AND TRANSFER THEM TO THE BUILDING STRUCTURE.

TYPICAL ANCHORS: SEE ELEV. FOR SPACING

1/4" DIA. ULTRACON BY 'ELCO' (Fu=177 KSI, Fy=155 KSI)

INTO 2BY WOOD BUCKS OR WOOD STRUCTURES
1-1/2" MIN. PENETRATION INTO WOOD (HEAD/JAMBS)

THRU 1BY BUCKS INTO CONC. OR MASONRY
1-1/4" MIN. EMBED INTO CONCRETE (HEAD/SILL)
1-1/4" MIN. EMBED INTO CONC. OR MASONRY (JAMBS)

DIRECTLY INTO CONC. OR MASONRY
1-1/2" MIN. EMBED INTO CONCRETE (HEAD/SILL)
1-1/4" MIN. EMBED INTO CONC. OR MASONRY (JAMBS)

#14 SMS OR SELF DRILLING SCREWS (GRADE 2 CRS)

INTO MIAMI-DADE COUNTY APPROVED MULLIONS (MIN. THK. = 1/8")

INTO METAL STRUCTURES
STEEL : 1/8" THK. MIN. (Fy = 36 KSI MIN.)
ALUMINUM : 1/8" THK. MIN. (6063-T5 MIN.)
(STEEL IN CONTACT WITH ALUMINUM TO BE PLATED OR PAINTED)

TYPICAL EDGE DISTANCE

INTO CONCRETE AND MASONRY = 2-1/2" MIN.
INTO WOOD STRUCTURE = 1" MIN.
INTO METAL STRUCTURE = 3/4" MIN.

WOOD AT HEAD OR JAMBS SG = 0.55 MIN.
CONCRETE AT HEAD, SILL OR JAMBS f'c = 3000 PSI MIN.
C-90 HOLLOW/FILLED BLOCK AT JAMBS f'm = 2000 PSI MIN.

SEALANTS:

FRAME AND LEAF CORNERS, INSTALLATION SCREWS AT SILL AND ALL METAL PARTS CONNECTIONS SEALED WITH PTI SILICONE.

WEEPS:

3/16" X 3/4" WEEP SLOTS AT 3" FROM EACH END

PRODUCT REVISED
as complying with the Florida Building Code
Acceptance No. 15-0310.05
Expiration Date 9/1/20
By Ishaq I. Ahmad
Miami Dade Product Control

DOOR DETAILS

Engr: JAVAD AHMAD
CIVIL
FLA. PE # 70592
C.A.N. 3538
SEP 03 2015

AL-FAROOQ CORPORATION
ENGINEERS & PRODUCT DEVELOPMENT
1235 S.W. 87 AVE
MIAMI, FLORIDA 33174
TEL. (305) 264-8100 FAX. (305) 262-6978
COMP-ANL\W10-08VV

ALUMINUM OUT-SWING ENTRANCE DOOR (L.M.I.)

Labrador & Fundora Corp.
dba-V & V Windows
2355 West 4th Ave.
Hialeah, Fl. 33010
TEL. (305) 888-4151 FAX. (305) 888-1042

revisions:

no	date	by	description
C	11.22.11		NO CHANGE THIS SHEET
D	02.12.15		UPDATED TO 2014 FBC
E	07.31.15		REV. PER RER COMMENTS
F	09.03.15		REV. PER RER COMMENTS

date: 02-24-10
scale: 3/8" = 1"
dr. by: HAMID
chk. by:

drawing no. W10-08

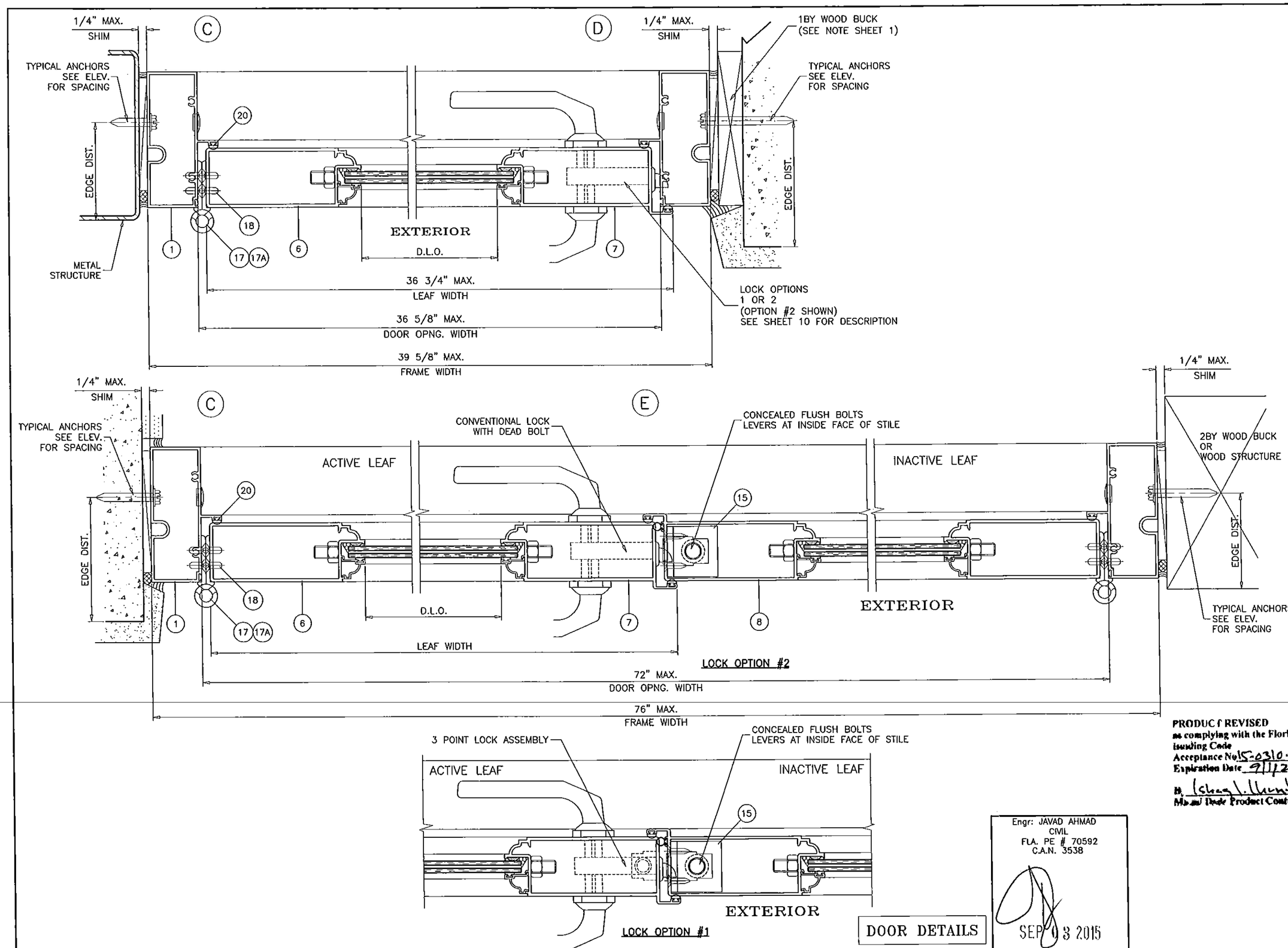

PRODUCT REVISED
as complying with the Florida
Building Code
Acceptance No. 15-0310.05
Expiration Date 9/1/20
By Cheryl Hunt
Miami-Dade Product Control

Engr: JAVAD AHMAD
CIVIL
FLA. PE # 70592
C.A.N. 3538

SEP 03 2015

DOOR DETAILS

AL-FAROOQ CORPORATION
ENGINEERS & PRODUCT DEVELOPMENT
1235 S.W. 87 AVE
MIAMI, FLORIDA 33174
TEL. (305) 264-8100 FAX. (305) 262-6978
COMP-ANL\W10-08V

ALUMINUM OUT-SWING ENTRANCE DOOR (L.M.I.)

Labrador & Fundora Corp.
dba-V & V Windows
2355 West 4th Ave.
Hialeah, Fl. 33010
TEL. (305) 888-4151 FAX. (305) 888-1042

revisions:

no	date	by	description
C	11.22.11		NO CHANGE THIS SHEET
D	02.12.15		UPDATED TO 2014 FBC
E	07.31.15		REV. PER RER COMMENTS
F	09.03.15		REV. PER RER COMMENTS

date: 02-24-10
scale: 3/8" = 1"
dr. by: HAMID
chk. by:

drawing no.
W10-08

sheet 7 of 12

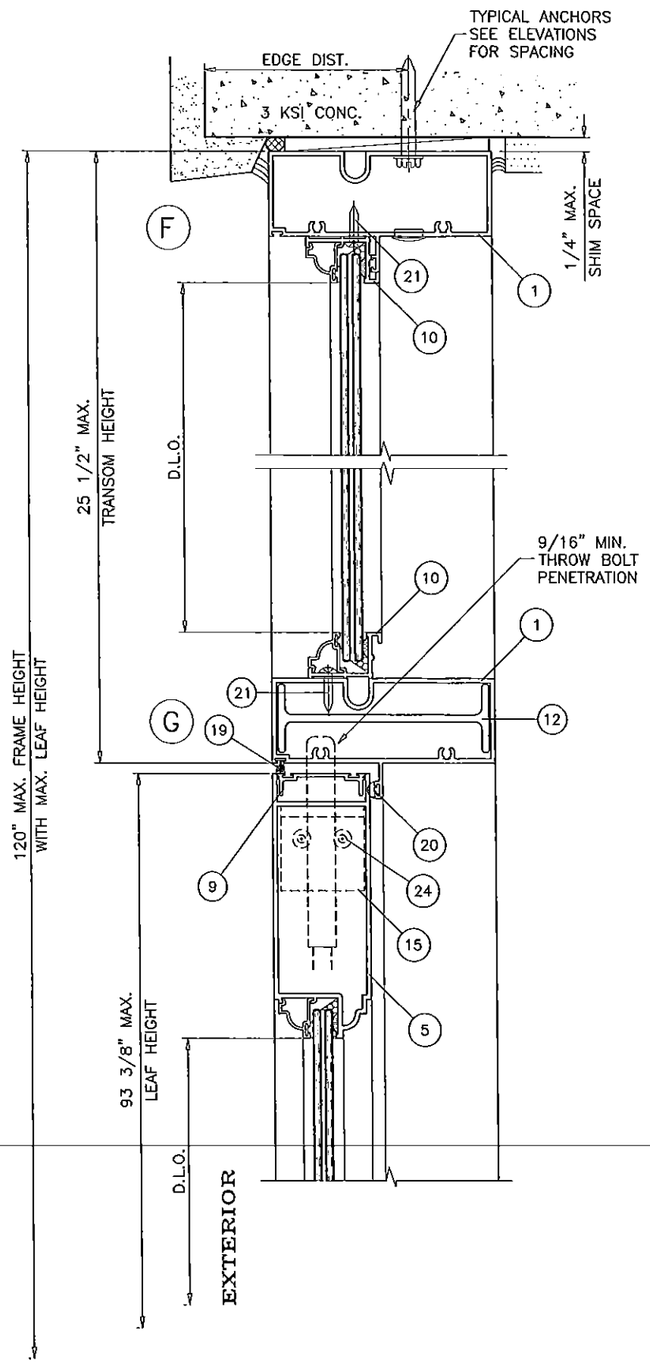

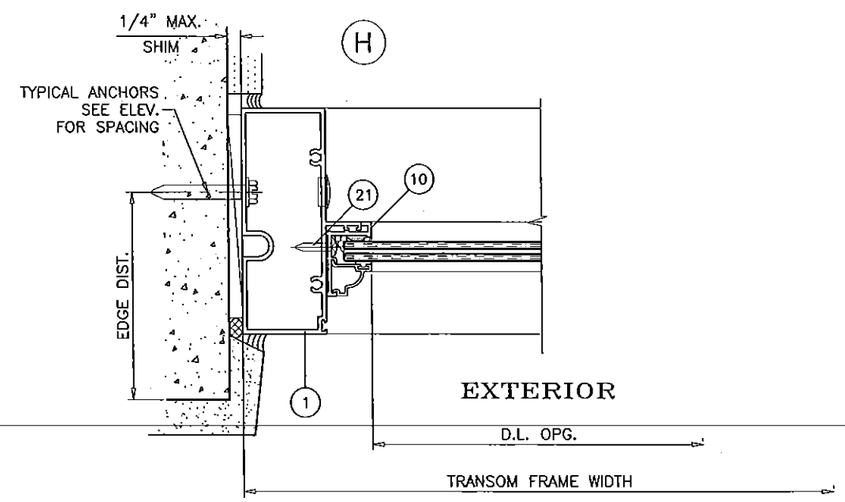

PRODUCT REVISED
as complying with the Florida
Building Code
Acceptance No 15-0310.05
Expiration Date 9/1/20
By Ishaq I. Ahmad
Miami Dade Product Control

DOOR WITH TRANSOM DETAILS

Engr: JAVAD AHMAD
CIVIL
FLA. PE # 70592
C.A.N. 3538

SEP 03 2015

AL-FAROOQ CORPORATION
ENGINEERS & PRODUCT DEVELOPMENT
1235 S.W. 87 AVE
MIAMI, FLORIDA 33174
TEL (305) 264-8100 FAX. (305) 262-6978
COMP-ANL\W10-08VV

ALUMINUM OUT-SWING ENTRANCE DOOR (L.M.I.)

Labrador & Fundora Corp.
dba-V & V Windows
2355 West 4th Ave.
Hialeah, Fl. 33010
TEL. (305) 888-4151 FAX. (305) 888-1042

revisions:

no	date	by	description
C	11.22.11		NO CHANGE THIS SHEET
D	02.12.15		UPDATED TO 2014 FBC
E	07.31.15		REV. PER RER COMMENTS
F	09.03.15		REV. PER RER COMMENTS

date: 02-24-10
scale: 3/8" = 1"
dr. by: HAMID
chk. by:

drawing no.
W10-08

sheet 8 of 12

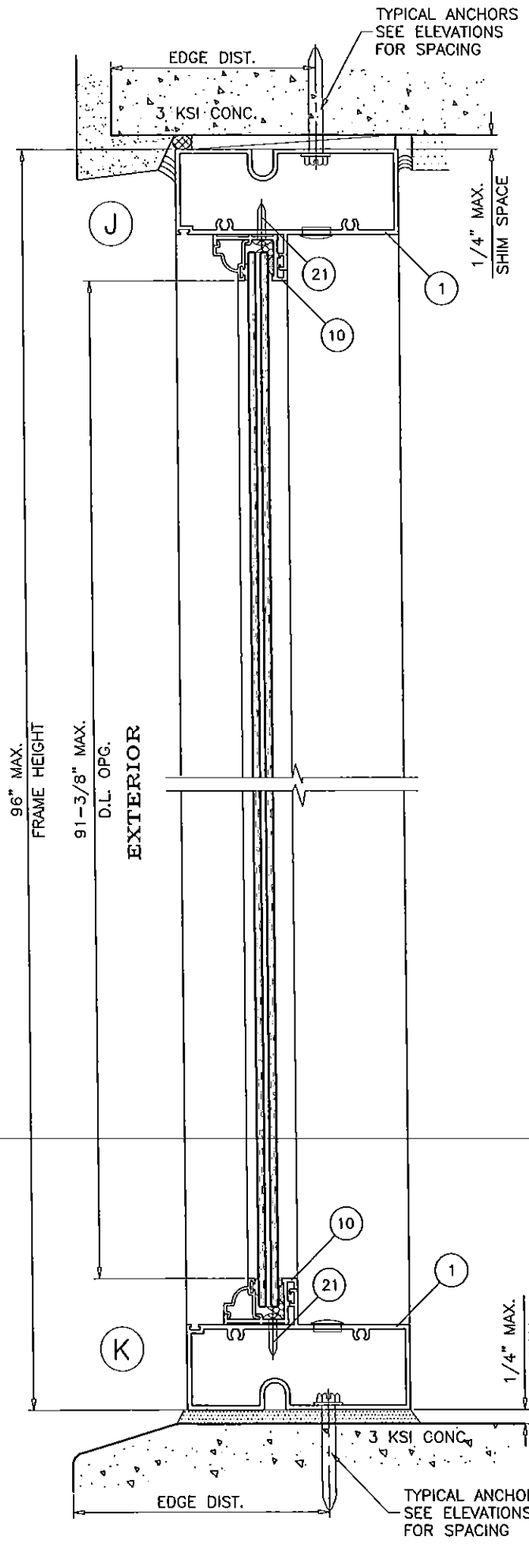

STATIONARY UNIT (SIDELITE)

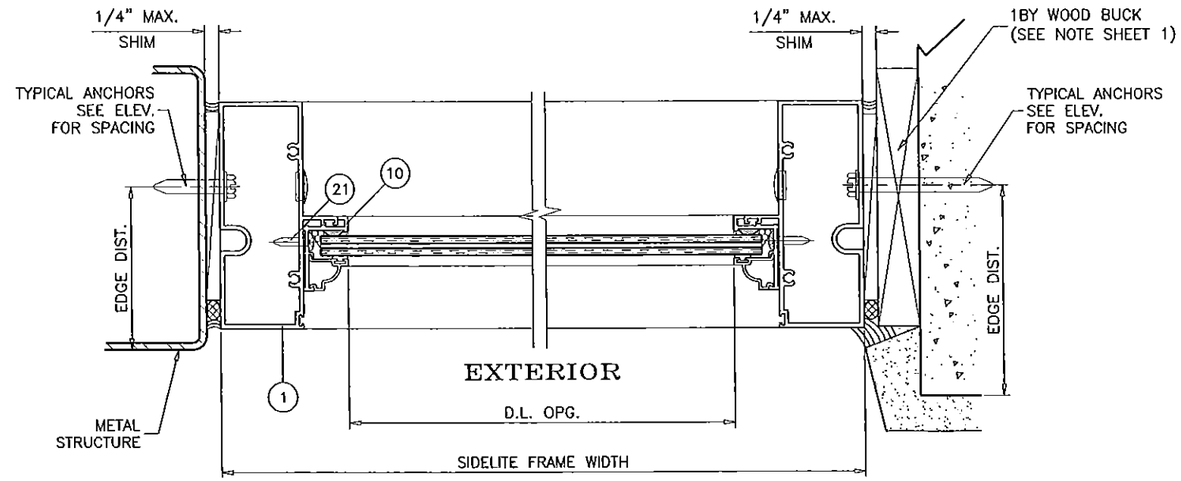

SINGLE SIDELITE

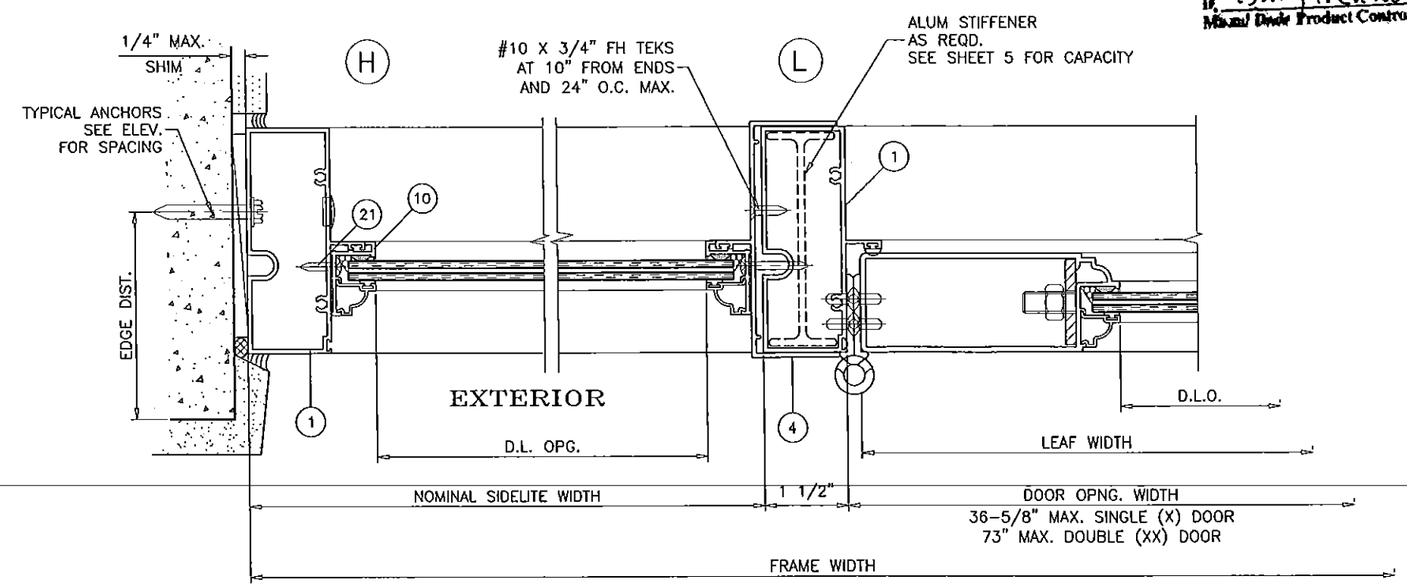

PRODUCT REVISED
as complying with the Florida
Building Code
Acceptance No. 15-0310.05
Expiration Date 9/1/20
By Ishaq I. Chaudhry
Miami Dade Product Control

SIDELITE DETAILS

SIDELITE WITH DOOR DETAILS

Engr: JAVAD AHMAD
CIVIL
FLA. PE # 70592
C.A.N. 3538
SEP 03 2015

AL-FAROOQ CORPORATION
ENGINEERS & PRODUCT DEVELOPMENT
1235 S.W. 87 AVE
MIAMI, FLORIDA 33174
TEL. (305) 264-8100 FAX. (305) 262-6978
COMP-ANL\W10-08VV

ALUMINUM OUT-SWING ENTRANCE DOOR (L.M.I.)

Labrador & Fundora Corp.
dba-V & V Windows
2355 West 4th Ave.
Hialeah, Fl. 33010
TEL. (305) 888-4151 FAX. (305) 888-1042

revisions:

no	date	by	description
C	11.22.11		NO CHANGE THIS SHEET
D	02.12.15		UPDATED TO 2014 FBC
E	07.31.15		REV. PER RER COMMENTS
F	09.03.15		REV. PER RER COMMENTS

date: 02-24-10
scale: 3/8" = 1"
dr. by: HAMID
chk. by:

drawing no.
W10-08

ITEM #	PART #	REQD.	DESCRIPTION	MATERIAL	MANF./SUPPLIER/REMARKS
1	V501	3/ DOOR	FRAME HEAD/JAMB	6063–T6	V & V SELECTED EXTRUDER
2	V502	1	FRAME SILL	6063–T6	V & V SELECTED EXTRUDER
3	V503	1	SILL COVER	6063–T6	V & V SELECTED EXTRUDER
4	V504	AS REQD.	SIDELITE STILE	6063–T6	V & V SELECTED EXTRUDER
5	V505	2/ LEAF	TOP AND BOTTOM RAIL	6063–T6	V & V SELECTED EXTRUDER
6	V506	1/ LEAF	HINGE STILE	6063–T6	V & V SELECTED EXTRUDER
7	V507	1/ LEAF	LOCK AND ASTRAGAL STILE	6063–T6	V & V SELECTED EXTRUDER
8	V513	AS REQD.	INACTIVE ASTRAGAL STILE	6063–T6	V & V SELECTED EXTRUDER
9	V508	2/ LEAF	SWEEP ADAPTER	6063–T6	V & V SELECTED EXTRUDER
10	V509	AS REQD.	SIDELITE ADAPTER	6063–T6	V & V SELECTED EXTRUDER
11	V511	AS REQD.	GLAZING BEAD – 5/16" GLASS	6063–T6	V & V SELECTED EXTRUDER
11A	V517	AS REQD.	GLAZING BEAD – 7/16" GLASS	6063–T6	V & V SELECTED EXTRUDER
12	V512	AS REQD.	REINFORCING STIFFENER	6063–T6	V & V SELECTED EXTRUDER
13	–	2/ LEAF	3/8" THREADED ROD	STEEL	–
15	V514	2/ LEAF	FLUSH BOLT SUPPORT ANGLE	6063–T5	1–1/2" X 1–1/2" X 3/16"
17	–	3/ LEAF	BALL BEARING HINGE ASSEMBLY	–	–
17A	–	3/ LEAF	3 PIECE HINGE ASSEMBLY	–	–
18	–	AS REQD.	SETTING BLOCKS	EPDM	DUROMETER 80±5 SHORE A
19	–	AS REQD.	FIN SEAL PILE WEATHERSTRIPPING	–	–
20	V516	AS REQD.	BULB WEATHERSTRIPPING	SANTOPRENE	DUROMETER 60±5
21	#8 X 1/2"	AS REQD.	GLAZING ADAPTER SCREWS	ST. STEEL	PH TEKS, AT 2" FROM ENDS & 8" O.C. MAX.
22	#10 X 2"	AS REQD.	FRAME ASSEMBLY SCREWS	ST. STEEL	PH SMS
23	–	AS REQD.	SIDE LITE ADAPTER SCREWS	ST. STEEL	–
24	#8–32 X 1/2"	2/ ANGLE	SUPPORT ANGLE SCREWS	ST. STEEL	FH MS
25	–	AS REQD.	BUMPER SPACER	SILICONE	–

LOCKS:

OPTION #1:

ACTIVE LEAF:

3 POINT LOCK ASSEMBLY BY 'SULLIVAN AND ASSOC.'
7/16" X 3" THROW BOLTS AT TOP AND BOTTOM
ENGAGING FRAME AT HEAD AND SILL
THROW BOLTS ATTACHED TO LOCK BY CONNECTING RODS
LOCK LOCATED AT 52–3/4" FROM BOTTOM
LOCK HANDLE AT 49–1/2" FROM BOTTOM

INACTIVE LEAF

CONCEALED FLUSH BOLTS BY 'SULLIVAN & ASSOC.'
1/2" X 2" THROW BOLTS ENGAGING FRAME AT
HEAD AND SILL
MANUALLY OPERATED LEVERS MOUNTED ON
INSIDE FACE OF LEAF STILE LOCATED AT
10–3/4" FROM TOP AND BOTTOM
LOCK FASTENED TO STILE WITH (2) 38–32 X 1/2" FH MS

OPTION #2:

ACTIVE LEAF:

CONVENTIONAL DOOR LOCKSET WITH HANDLE BY
'SULLIVAN AND ASSOC.' LOCATED AT 39" FROM
BOTTOM
KEY OPERATED ON EXTERIOR AND THUMB TURN ON
INTERIOR THROW BOLT LOCK BY 'SULLIVAN AND ASSOC.'
LOCATED AT 46" FROM BOTTOM

INACTIVE LEAF

CONCEALED FLUSH BOLTS BY 'SULLIVAN & ASSOC.'
1/2" X 2" THROW BOLTS ENGAGING FRAME AT
HEAD AND SILL
MANUALLY OPERATED LEVERS MOUNTED ON
INSIDE FACE OF LEAF STILE LOCATED AT
10–3/4" FROM TOP AND BOTTOM
LOCK FASTENED TO STILE WITH (2) 38–32 X 1/2" FH MS

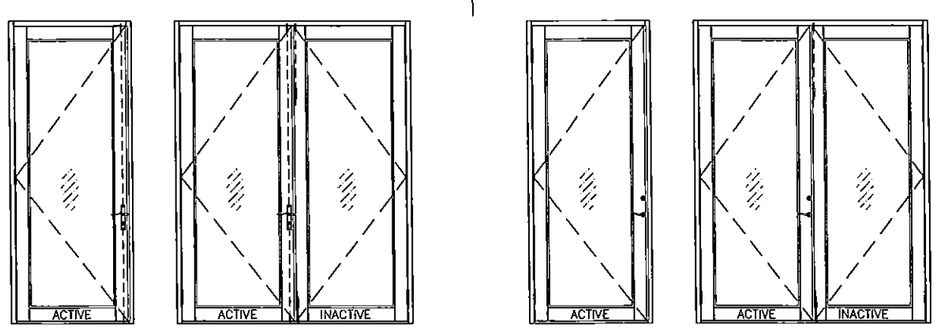

NOTE: LOCKS MUST BE ENGAGED DURING
PERIODS OF HURRICANE WARNING.

HINGES:

OPTION #1:

4–3/4" BALL BEARING HINGES 3 PER LEAF
BOTTOM HINGE AT 8–3/8" FROM BOTTOM RAIL
TOP HINGE AT 11" FROM TOP RAIL
CENTER HINGE AT MIDSPAN
HINGES FASTENED WITH #12–24 X 1/2" FH MS

OPTION #2:

7–13/16" THREE PIECE HINGES 3 PER LEAF
BOTTOM HINGE AT 8–3/8" FROM BOTTOM RAIL
TOP HINGE AT 11" FROM TOP RAIL
CENTER HINGE AT MIDSPAN
HINGES FASTENED WITH #10–24 X 1/2" FH MS

SEALANTS:

ALL JOINTS AND FRAME CONNECTIONS SEALED WITH
PTI SILICONE.

PRODUCT REVISED
as complying with the Florida Building Code
Acceptance No. 15-0310.05
Expiration Date 9/1/20
By [signature]
Miami Dade Product Control

Engr: JAVAD AHMAD
CIVIL
FLA. PE # 70592
C.A.N. 3538

SEP 03 2015

AL-FAROOQ CORPORATION
ENGINEERS & PRODUCT DEVELOPMENT
1235 S.W. 87 AVE
MIAMI, FLORIDA 33174
TEL (305) 264-8100 FAX. (305) 262-6978

COMP–ANL\W10–08W

ALUMINUM OUT–SWING ENTRANCE DOOR (L.M.I.)

Labrador & Fundora Corp.
dba–V & V Windows
2355 West 4th Ave.
Hialeah, Fl. 33010
TEL (305) 888–4151 FAX. (305) 888–1042

revisions:

no	date	by	description
C	11.22.11		NO CHANGE THIS SHEET
D	02.12.15		UPDATED TO 2014 FBC
E	07.31.15		REV. PER RER COMMENTS
F	09.03.15		REV. PER RER COMMENTS

date: 02–24–10
scale: 3/8" = 1"
dr. by: HAMID
chk. by:

drawing no.
W10–08

sheet 10 of 12

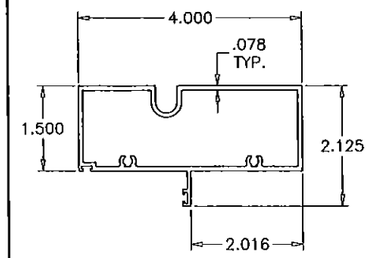

(1) FRAME HEAD/JAMB

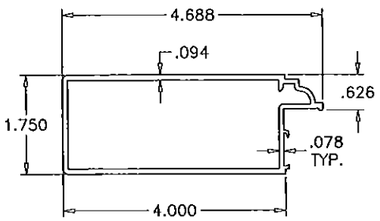

(6) HINGE STILE

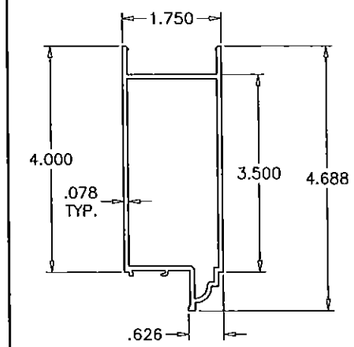

(5) TOP & BOTTOM RAIL

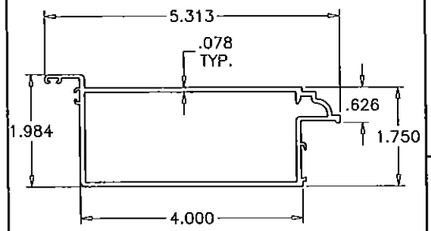

(8) INACTIVE ASTRAGAL STILE

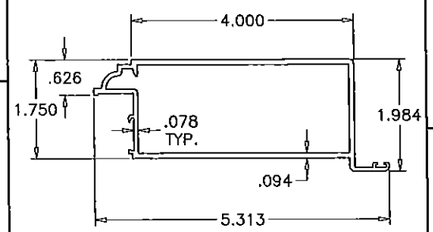

(7) LOCK/ASTRAGAL STILE

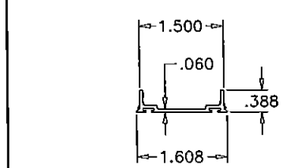

(9) SWEEP ADAPTER

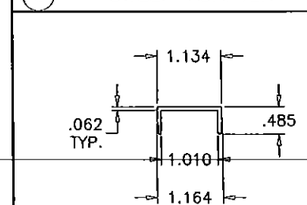

(3) SILL COVER

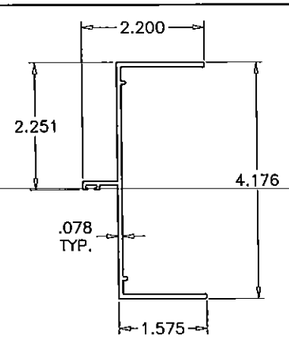

(4) SIDELITE STILE

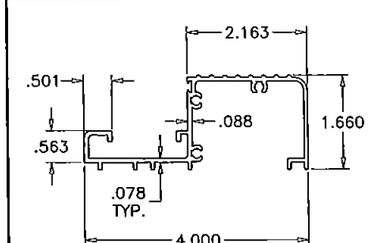

(2) FRAME SILL

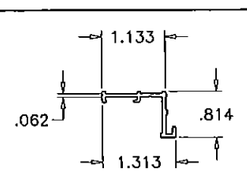

(10) SIDELITE ADAPTER

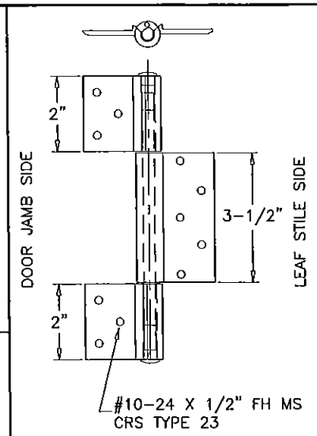

(17A) 3 PIECE HINGE

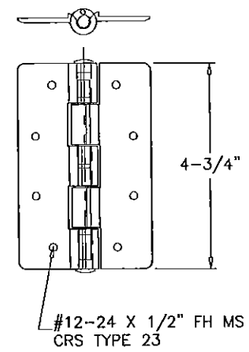

(17) BALL BEARING HINGE

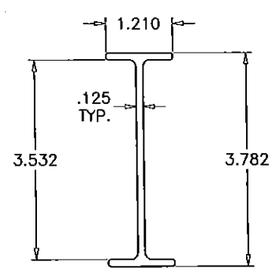

(12) STIFFENER

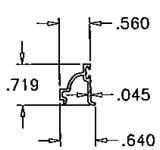

(11) GLAZING BEAD – 7/16" GLASS

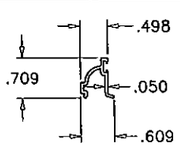

(11A) GLAZING BEAD – 5/16" GLASS

PRODUCT REVISED
as complying with the Florida
Building Code
Acceptance No. 15-0310.05
Expiration Date 9/1/20
By Ishwar L. Chandra
Miami-Dade Product Control

Engr: JAVAD AHMAD
CIVIL
FLA. PE # 70592
C.A.N. 3538

SEP 03 2015

AL-FAROOQ CORPORATION
ENGINEERS & PRODUCT DEVELOPMENT
1235 S.W. 87 AVE
MIAMI, FLORIDA 33174
TEL. (305) 264-8100 FAX. (305) 262-6978

COMP-ANL\W10-08VV

ALUMINUM OUT-SWING ENTRANCE DOOR (L.M.I.)

Labrador & Fundora Corp.
dba-V & V Windows
2355 West 4th Ave.
Hialeah, Fl. 33010
TEL. (305) 888-4151 FAX. (305) 888-1042

revisions:

no	date	by	description
C	11.22.11		NO CHANGE THIS SHEET
D	02.12.15		NO CHANGE THIS SHEET
E	07.31.15		REV. PER RER COMMENTS
F	09.03.15		NO CHANGE THIS SHEET

date: 02-24-10
scale: 3/8" = 1"
dr. by: HAMID
chk. by:

drawing no.
W10-08

sheet 11 of 12

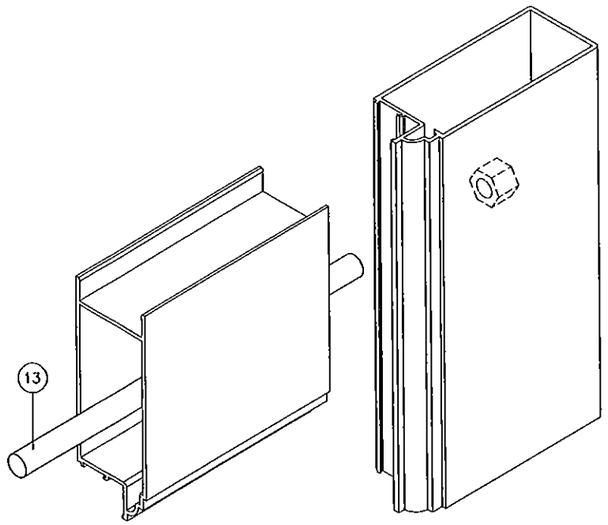

LEAF TOP CORNER

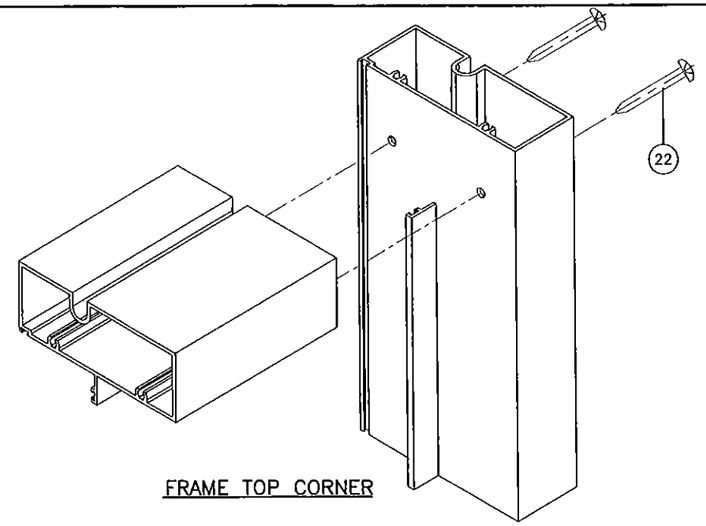

FRAME TOP CORNER

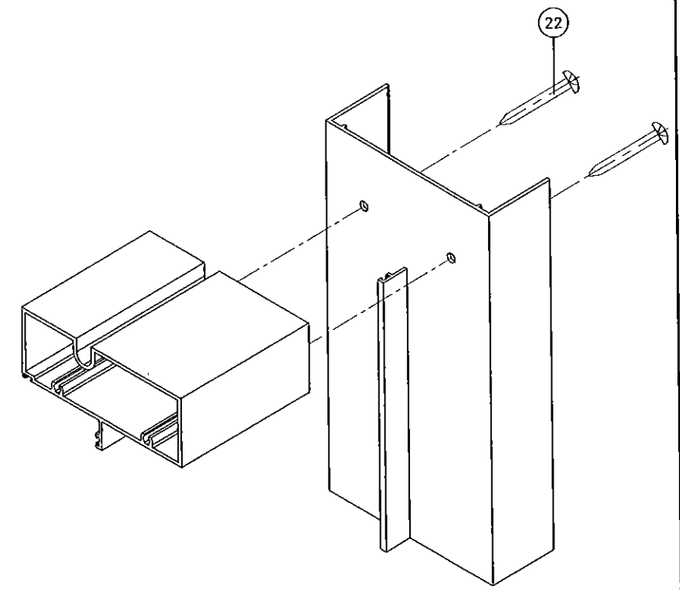

SIDELITE SLIP ON JAMB CORNER

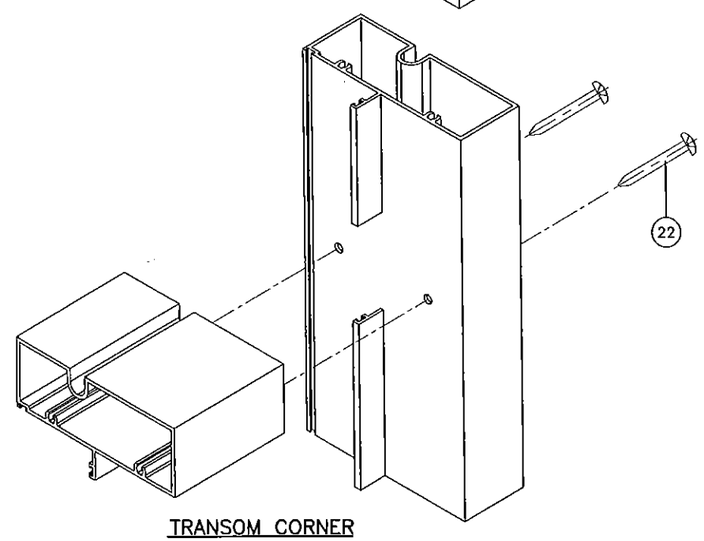

TRANSOM CORNER

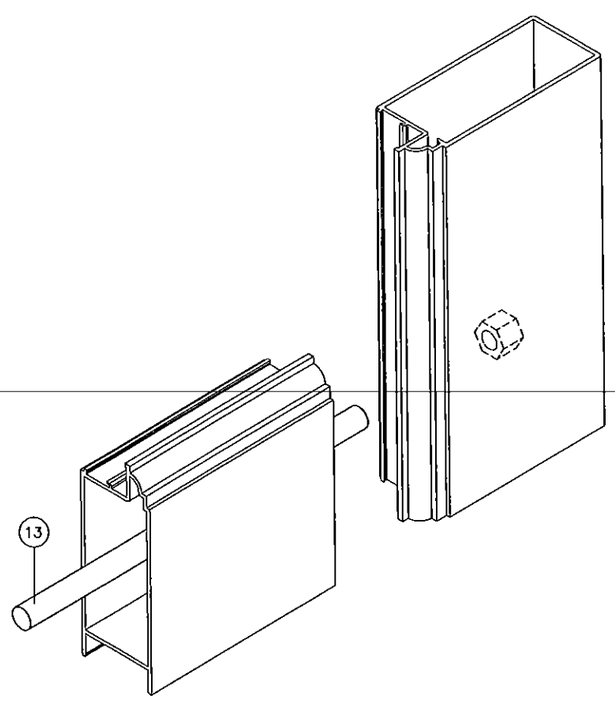

LEAF BOTTOM CORNER

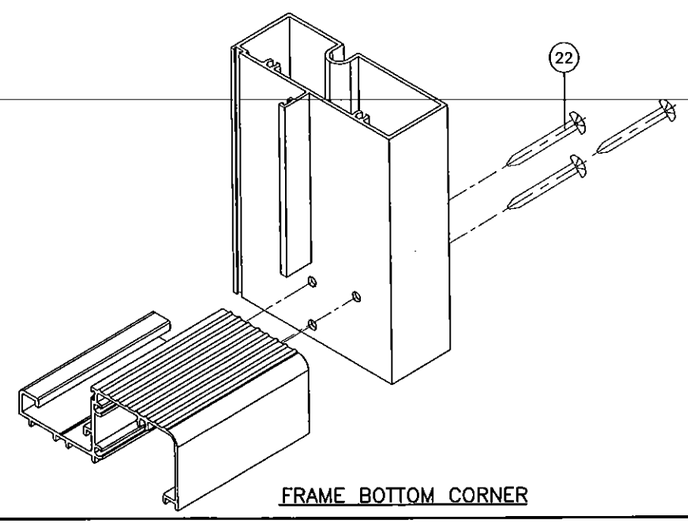

FRAME BOTTOM CORNER

PRODUCT REVISED
as complying with the Florida
Building Code
Acceptance No. 15-0310.05
Expiration Date 9/11/20
By Chang L. Chandra
Miami Dade Product Control

Engr: JAVAD AHMAD
CIVIL
FLA. PE # 70592
C.A.N. 3538

SEP 03 2015

AL-FAROOQ CORPORATION
ENGINEERS & PRODUCT DEVELOPMENT
1235 S.W. 87 AVE
MIAMI, FLORIDA 33174
TEL. (305) 264-8100 FAX. (305) 262-6978

COMP-ANL\W10-08V

ALUMINUM OUT-SWING ENTRANCE DOOR (L.M.I.)

Labrador & Fundora Corp.
dba-V & V Windows
2355 West 4th Ave.
Hialeah, Fl. 33010
TEL. (305) 888-4151 FAX. (305) 888-1042

revisions:

no	date	by	description
C	11.22.11		NO CHANGE THIS SHEET
D	02.12.15		NO CHANGE THIS SHEET
E	07.31.15		REV. PER RER COMMENTS
F	09.03.15		NO CHANGE THIS SHEET

date: 02-24-10
scale: 3/8" = 1"
dr. by: HAMID
chk. by:

drawing no.
W10-08

sheet 12 of 12