MIAMI-DADE COUNTY
DEPARTMENT OF REGULATORY AND ECONOMIC RESOURCES (RER)
BOARD AND CODE ADMINISTRATION DIVISION

MIAMI–DADE COUNTY
PRODUCT CONTROL SECTION
11805 SW 26 Street, Room 208
T (786) 315–2590 F (786) 315–2599
www.miamidade.gov/economy

NOTICE OF ACCEPTANCE (NOA)

Labrador & Fundora Corp.
dba V & V Windows
2355 W 4th Avenue
Hialeah, FL 33010–1454

SCOPE:

This NOA is being issued under the applicable rules and regulations governing the use of construction materials. The documentation submitted has been reviewed and accepted by Miami–Dade County RER–Product Control Section to be used in Miami–Dade County and other areas where allowed by the Authority Having Jurisdiction (AHJ).

This NOA shall not be valid after the expiration date stated below. The Miami–Dade County Product Control Section (In Miami–Dade County) and/ or the AHJ (in areas other than Miami–Dade County) reserve the right to have this product or material tested for quality assurance purposes. If this product or material fails to perform in the accepted manner, the manufacturer will incur the expense of such testing and the AHJ may immediately revoke, modify, or suspend the use of such product or material within their jurisdiction. RER reserves the right to revoke this acceptance, if it is determined by Miami–Dade County Product Control Section that this product or material fails to meet the requirements of the applicable building code.

This product is approved as described herein, and has been designed to comply with the Florida Building Code, including the High Velocity Hurricane Zone.

DESCRIPTION: Series "1200" Aluminum Horizontal Rolling Window – N.I.

APPROVAL DOCUMENT: Drawing No. **W07–50**, titled "Series 1200 Alum. Horizontal Rolling Wdw. (N.I.)", sheets 1 through 6 of 6, dated 05/29/07, with revision "**D**" dated 07/27/15, prepared by Al–Farooq Corporation, signed and sealed by Javad Ahmad, P. E., bearing the Miami–Dade County Product Control Revision stamp with the Notice of Acceptance number and Expiration date by the Miami–Dade County Product Control Section.

MISSILE IMPACT RATING: None.

LABELING: Each unit shall bear a permanent label with the manufacturer's name or logo, city, state, series, and following statement: "Miami–Dade County Product Control Approved", unless otherwise noted herein.

RENEWAL of this NOA shall be considered after a renewal application has been filed and there has been no change in the applicable building code negatively affecting the performance of this product.

TERMINATION of this NOA will occur after the expiration date or if there has been a revision or change in the materials, use, and/ or manufacture of the product or process. Misuse of this NOA as an endorsement of any product, for sales, advertising or any other purposes shall automatically terminate this NOA. Failure to comply with any section of this NOA shall be cause for termination and removal of NOA.

ADVERTISEMENT: The NOA number preceded by the words Miami–Dade County, Florida, and followed by the expiration date may be displayed in advertising literature. If any portion of the NOA is displayed, then it shall be done in its entirety.

INSPECTION: A copy of this entire NOA shall be provided to the user by the manufacturer or its distributors and shall be available for inspection at the job site at the request of the Building Official.

This NOA **revises NOA No. 12–0306.03** and consists of this page 1 and evidence pages E–1 and E–2, as well as approval document mentioned above.

The submitted documentation was reviewed by **Manuel Perez, P. E.**

MIAMI-DADE COUNTY APPROVED

8/7/15

NOTICE OF ACCEPTANCE: EVIDENCE SUBMITTED

A. DRAWINGS

1. Manufacturer's die drawings and sections.
   (Submitted under NOA No. 07–0612.10)
2. Drawing No. **W07–50**, titled "Series 1200 Alum. Horizontal Rolling Wdw. (N.I.)", sheets 1 through 6 of 6, dated 05/29/07, with revision "**D**" dated 07/27/15, prepared by Al–Farooq Corporation, signed and sealed by Javad Ahmad, P. E.

B. TESTS

1. Test reports on: 1) Air Infiltration Test, per FBC, TAS 202–94
   2) Uniform Static Air Pressure Test, Loading per FBC, TAS 202–94
   3) Water Resistance Test, per FBC, TAS 202–94
   4) Forced Entry Test, per FBC 2411.3.2.1, and TAS 202–94
   Qualifying AAMA 1302.5 Performance Tests A, B, D, E, F & G
   along with marked–up drawings and installation diagram of horizontal slider non–impact window, prepared by American Test Lab of South Florida, Inc., Test Report No. **ATLSF–0103.01–06**, dated 05/05/07, signed and sealed by Henry Hattem, P. E. and by William R. Mehner, P. E.
   (Submitted under NOA No. 07–0612.10)

C. CALCULATIONS

1. Anchor verification calculations and structural analysis, complying with **FBC 5th Edition (2014)**, prepared by Al–Farooq Corporation, dated 02/09/15, revised dated 07/31/15, signed and sealed by Javad Ahmad, P. E.
2. **Glazing complies with ASTM E1300–09**

D. QUALITY ASSURANCE

1. Miami–Dade Department of Regulatory and Economic Resources (RER).

E. MATERIAL CERTIFICATIONS

1. None.

F. STATEMENTS

1. Statement letter of conformance to, of complying with **FBC 5th Edition (2014)** and of no financial interest, dated 02/09/15, issued by Al–Farooq Corporation, signed and sealed by Javad Ahmad, P. E.
2. Laboratory compliance letter for Test Report No. **ATLSF–0103.01–06**, issued by American Test Lab of South Florida, Inc., dated 05/09/07, signed and sealed by Henry Hattem, P. E. and by William R. Mehner, P. E.
   (Submitted under NOA No. 07–0612.10)

Manuel Perez, P. E.
Product Control Examiner
NOA No. 15–0311.03
Expiration Date: September 27, 2017
Approval Date: August 13, 2015

F. STATEMENTS (CONTINUED)

3. Proposal No. **09–1140** issued by the Product Control, dated 08/17/09, signed by Renzo Narciso.
   (Submitted under NOA No. 07–0612.10)

G. OTHERS

1. Notice of Acceptance No. **12–0306.03**, issued to Labrador & Fundora Corp. dba V & V Windows for their Series "1200 Aluminum Horizontal Sliding Window – N.I.", approved on 05/10/12 and expiring on 09/27/17.

Manuel Perez, P. E.
Product Control Examiner
NOA No. 15–0311.03
Expiration Date: September 27, 2017
Approval Date: August 13, 2015

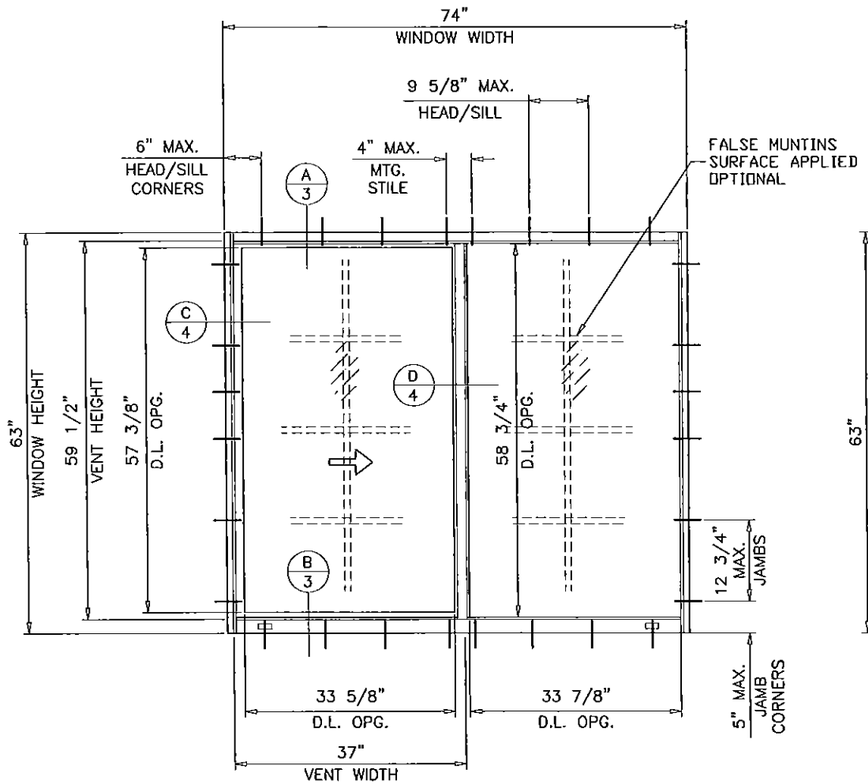

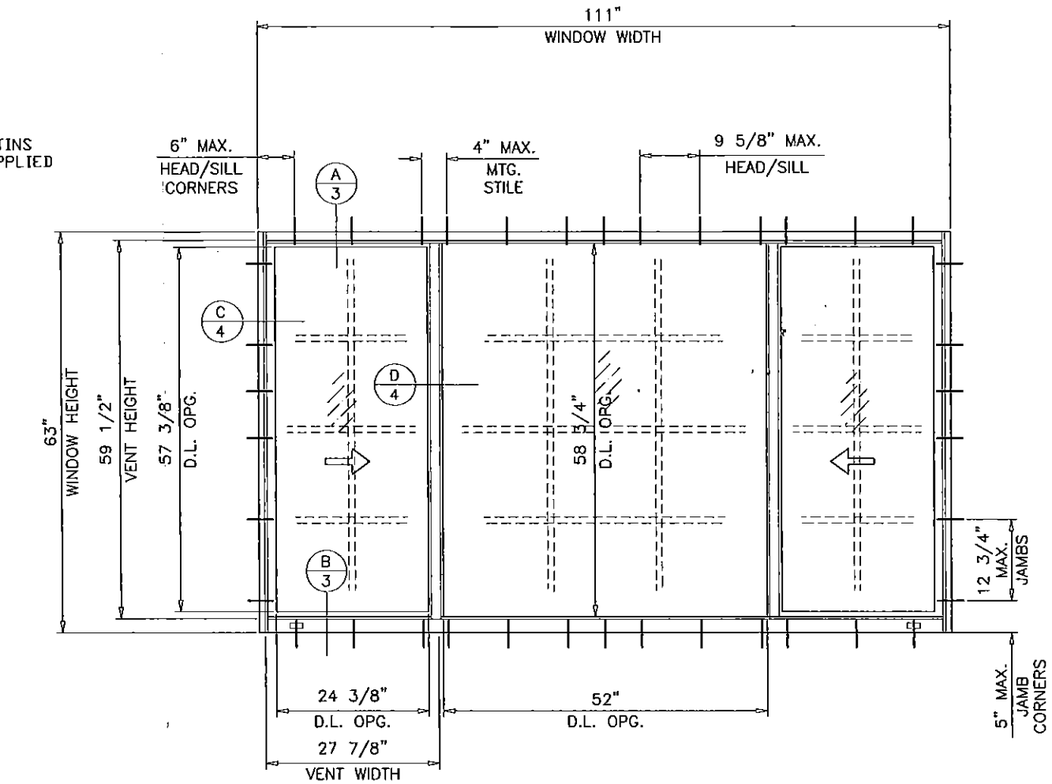

TYPICAL ELEVATIONS

SERIES 1200
ALUMINUM HORIZONTAL SLIDING WINDOW

APPROVAL APPLIES TO SINGLE UNITS OR SIDE BY SIDE COMBINATIONS OF H.S./H.S. OR HORIZONTAL SLIDING WITH OTHER WINDOW TYPES IN MODULES OF TWO OR MORE WINDOWS USING MIAMI-DADE COUNTY APPROVED MULLIONS IN BETWEEN. LOWER DESIGN PRESSURE FROM WINDOWS OR MULLION APPROVAL WILL APPLY TO ENTIRE SYSTEM.

THIS PRODUCT HAS BEEN DESIGNED AND TESTED TO COMPLY WITH THE REQUIREMENTS OF THE FLORIDA BUILDING CODE INCLUDING HIGH VELOCITY HURRICANE ZONE (HVHZ).

WOOD BUCKS BY OTHERS, MUST BE ANCHORED PROPERLY TO TRANSFER LOADS TO THE STRUCTURE.

ANCHORS SHALL BE AS LISTED, SPACED AS SHOWN ON DETAILS, ANCHORS EMBEDMENT TO BASE MATERIAL SHALL BE BEYOND WALL DRESSING OR STUCCO.

ANCHORING OR LOADING CONDITIONS NOT SHOWN IN THESE DETAILS ARE NOT PART OF THIS APPROVAL.

A LOAD DURATION INCREASE IS USED IN DESIGN OF ANCHORS INTO WOOD ONLY.

ALL SHIMS TO BE HIGH IMPACT, NON-METALLIC AND NON-COMPRESSIBLE.

MATERIALS INCLUDING BUT NOT LIMITED TO STEEL/METAL SCREWS, THAT COME INTO CONTACT WITH OTHER DISSIMILAR MATERIALS SHALL MEET THE REQUIREMENTS OF THE FLORIDA BUILDING CODE.

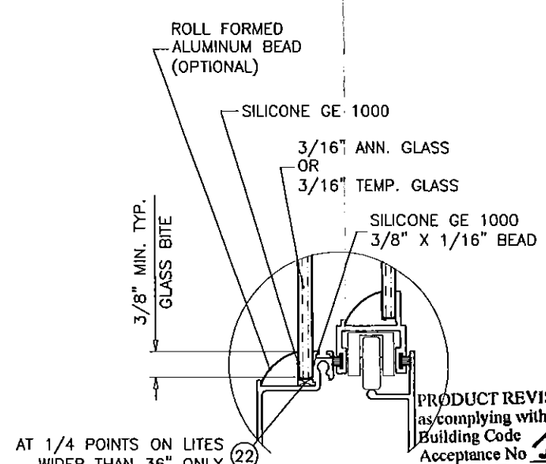

GLAZING DETAIL

PRODUCT REVISED
as complying with the Florida
Building Code
Acceptance No 15-0311.03
Expiration Date 09/27/2017
By
Miami Dade Product Control

WINDOWS NOT RATED FOR IMPACT.

INSTALLATION OF THIS PRODUCT IN THE HVHZ AREA REQUIRES THE USE OF APPROVED SHUTTERS OR EXTERNAL PROTECTION DEVICES COMPLYING WITH HVHZ REQUIREMENTS.

INSTALLATION OF THIS SYSTEM OUTSIDE THE HVHZ AREA SHALL MEET THE APPLICABLE REQUIREMENTS FOR WIND BORNE DEBRIS PROTECTION.

Engr: JAVAD AHMAD
CIVIL
FLA. PE # 70592
C.A.N. 3538

JUL 31 2015

AL-FAROOQ CORPORATION
ENGINEERS & PRODUCT DEVELOPMENT
1235 S.W. 87 AVE
MIAMI, FLORIDA 33174
TEL. (305) 264-8100 FAX. (305) 262-6978

COMP-ANL\W07-50W

SERIES 1200 ALUM HORIZONTAL ROLLING WDW. (N.I.)

Labrador & Fundora Corp.
dba-V & V Windows
2355 West 4th Ave.
Hialeah, Fl. 33010
TEL. (305) 888-4151 FAX. (305) 888-1042

revisions:			
no	date	by	description
A	08.23.07		REV. PER BCCO COMMENTS
B	02.16.12		UPDATED TO 2010 FBC
C	02.11.15		UPDATED TO 2014 FBC
D	07.27.15		REV. PER RER COMMENTS

date: 05-29-07
scale: 1/2"=1'-0"
dr. by: HAMID
chk. by:

drawing no.
W07-50

DESIGN LOAD CAPACITY – PSF (XO OR OX SIZES)

WINDOW DIMS. WIDTH	WINDOW DIMS. HEIGHT	A	3/16" ANN. GLASS EXT.(+)	3/16" ANN. GLASS 1NT.(–)	3/16" TEMP. GLASS EXT.(+)	3/16" TEMP. GLASS 1NT.(–)
24"	24" (2)	3	73.3	125.0	73.3	125.0
36"		4	73.3	125.0	73.3	125.0
48"		5	73.3	125.0	73.3	125.0
60"		7	73.3	125.0	73.3	125.0
72"		8	73.3	125.0	73.3	125.0
24"	36" (3)	3	73.3	125.0	73.3	125.0
36"		4	73.3	125.0	73.3	125.0
48"		5	73.3	125.0	73.3	125.0
60"		7	73.3	105.7	73.3	125.0
72"		8	73.3	87.7	73.3	125.0
24"	48" (4)	3	73.3	125.0	73.3	125.0
36"		4	73.3	105.5	73.3	125.0
48"		5	73.3	85.8	73.3	123.9
60"		7	73.3	74.8	73.3	108.1
72"		8	67.6	67.6	73.3	99.1
24"	60" (5)	3	73.3	114.3	73.3	125.0
36"		4	73.3	80.7	73.3	116.6
48"		5	64.3	64.3	73.3	92.9
60"		7	54.9	54.9	73.3	79.3
72"		8	49.0	49.0	70.8	70.8
26-1/2"	26" (3)	3	73.3	125.0	73.3	125.0
37"		4	73.3	125.0	73.3	125.0
53-1/8"		6	73.3	125.0	73.3	125.0
74"		8	73.3	117.5	73.3	125.0
26-1/2"	38-3/8" (3)	3	73.3	125.0	73.3	125.0
37"		4	73.3	125.0	73.3	125.0
53-1/8"		6	73.3	109.8	73.3	125.0
74"		8	73.3	80.3	73.3	117.7
26-1/2"	50-5/8" (4)	3	73.3	125.0	73.3	125.0
37"		4	73.3	96.8	73.3	125.0
53-1/8"		6	73.3	74.7	73.3	107.9
74"		8	62.3	62.3	73.3	90.0
26-1/2"	63" (5)	3	73.3	99.2	73.3	125.0
37"		4	73.3	74.5	73.3	107.6
53-1/8"		6	56.1	56.1	73.3	81.0
74"		8	45.0	45.0	65.0	65.0

A = NO. OF ANCHORS PER HEAD & SILL
( ) = NO. OF ANCHORS PER JAMB

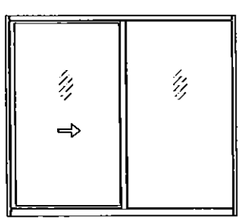

DESIGN LOAD CAPACITY – PSF (XOX SIZES)

WINDOW DIMS. WIDTH	WINDOW DIMS. HEIGHT	A	3/16" ANN. GLASS AT VENT / 3/16" ANN. GLASS AT FIX. LITE EXT.(+)	3/16" ANN. GLASS AT VENT / 3/16" ANN. GLASS AT FIX. LITE 1NT.(–)	3/16" ANN. GLASS AT VENT / 3/16" TEMP. GLASS AT FIX. LITE EXT.(+)	3/16" ANN. GLASS AT VENT / 3/16" TEMP. GLASS AT FIX. LITE 1NT.(–)	3/16" TEMP. GLASS AT VENT / 3/16" TEMP. GLASS AT FIX. LITE EXT.(+)	3/16" TEMP. GLASS AT VENT / 3/16" TEMP. GLASS AT FIX. LITE 1NT.(–)
72"	24" (2)	8	73.3	125.0	73.3	125.0	73.3	125.0
84"		9	73.3	125.0	73.3	125.0	73.3	125.0
96"		11	73.3	125.0	73.3	125.0	73.3	125.0
108"		12	73.3	125.0	73.3	125.0	73.3	125.0
72"	36" (3)	8	73.3	125.0	73.3	125.0	73.3	125.0
84"		9	73.3	113.4	73.3	113.4	73.3	125.0
96"		11	73.3	99.3	73.3	99.3	73.3	125.0
108"		12	73.3	87.9	73.3	87.9	73.3	125.0
72"	48" (4)	8	73.3	85.8	73.3	92.7	73.3	123.9
84"		9	73.3	77.8	73.3	79.1	73.3	112.4
96"		11	72.4	72.4	72.6	72.6	73.3	104.5
108"		12	67.7	67.7	67.7	67.7	73.3	99.1
72"	60" (5)	8	64.3	64.3	73.3	76.3	73.3	92.9
84"		9	57.5	57.5	59.9	59.9	73.3	83.1
96"		11	52.6	52.6	–	–	73.3	76.0
108"		12	49.0	49.0	–	–	70.8	70.8
74"	26" (3)	8	73.3	125.0	73.3	125.0	73.3	125.0
106-1/4"		12	73.3	124.3	73.3	124.3	73.3	125.0
111"		12	73.3	117.9	73.3	117.9	73.3	125.0
74"	38-3/8" (3)	8	73.3	115.3	73.3	118.1	73.3	125.0
106-1/4"		12	73.3	84.6	73.3	84.6	73.3	118.3
111"		12	73.3	80.5	73.3	80.5	73.3	117.7
74"	50-5/8" (4)	8	73.3	78.4	73.3	84.4	73.3	113.3
106-1/4"		12	63.6	63.6	–	–	73.3	91.8
111"		12	62.3	62.3	–	–	73.3	90.0
74"	63" (5)	8	59.3	59.3	70.3	70.3	73.3	85.6
106-1/4"		12	46.2	46.2	–	–	66.7	66.7
111"		12	45.0	45.0	–	–	65.0	65.0

A = NO. OF ANCHORS PER HEAD & SILL
( ) = NO. OF ANCHORS PER JAMB

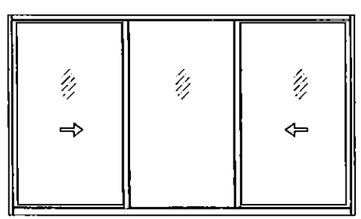

OPERATING VENTS TO BE 1/3 OF THE WINDOW WIDTH

DESIGN LOAD CAPACITY – PSF (XOX SIZES)

WINDOW DIMS. WIDTH	WINDOW DIMS. HEIGHT	A	WITHOUT REINFORCING: 3/16" ANN. GLASS AT VENT / 3/16" ANN. GLASS AT FIX. LITE EXT.(+)	WITHOUT REINFORCING: 3/16" ANN. GLASS AT VENT / 3/16" ANN. GLASS AT FIX. LITE 1NT.(–)	WITHOUT REINFORCING: 3/16" ANN. GLASS AT VENT / 3/16" TEMP. GLASS AT FIX. LITE EXT.(+)	WITHOUT REINFORCING: 3/16" ANN. GLASS AT VENT / 3/16" TEMP. GLASS AT FIX. LITE 1NT.(–)	WITHOUT REINFORCING: 3/16" TEMP. GLASS AT VENT / 3/16" TEMP. GLASS AT FIX. LITE EXT.(+)	WITHOUT REINFORCING: 3/16" TEMP. GLASS AT VENT / 3/16" TEMP. GLASS AT FIX. LITE 1NT.(–)	WITH REINFORCING: 3/16" TEMP. GLASS AT VENT / 3/16" TEMP. GLASS AT FIX. LITE EXT.(+)	WITH REINFORCING: 3/16" TEMP. GLASS AT VENT / 3/16" TEMP. GLASS AT FIX. LITE 1NT.(–)
72"	24" (2)	8	73.3	125.0	73.3	125.0	73.3	125.0	73.3	125.0
84"		9	73.3	116.0	73.3	125.0	73.3	125.0	73.3	125.0
96"		11	73.3	99.5	73.3	125.0	73.3	125.0	73.3	125.0
108"		12	73.3	89.1	73.3	125.0	73.3	125.0	73.3	125.0
72"	36" (3)	8	73.3	91.9	73.3	125.0	73.3	125.0	73.3	125.0
84"		9	73.3	80.5	73.3	125.0	73.3	125.0	73.3	125.0
96"		11	70.1	70.1	73.3	125.0	73.3	125.0	73.3	125.0
108"		12	60.4	60.4	73.3	125.0	73.3	125.0	73.3	125.0
72"	48" (4)	8	69.6	69.6	73.3	102.5	73.3	120.1	73.3	121.1
84"		9	62.5	62.5	73.3	95.0	73.3	111.4	73.3	112.3
96"		11	54.8	54.8	73.3	90.6	73.3	106.2	73.3	107.0
108"		12	–	–	73.3	87.6	–	–	73.3	103.6
72"	60" (5)	8	51.6	51.6	73.3	75.1	73.3	88.1	73.3	88.8
84"		9	–	–	68.2	68.2	–	–	73.3	80.6
96"		11	–	–	63.4	63.4	–	–	73.3	74.9
108"		12	–	–	60.1	60.1	–	–	71.0	71.0
74"	26" (3)	8	73.3	124.8	73.3	125.0	73.3	125.0	73.3	125.0
106-1/4"		12	73.3	79.5	73.3	125.0	73.3	125.0	73.3	125.0
111"		12	73.3	76.0	73.3	125.0	73.3	125.0	73.3	125.0
74"	38-3/8" (3)	8	73.3	84.9	73.3	125.0	73.3	125.0	73.3	125.0
106-1/4"		12	59.8	59.8	73.3	125.0	73.3	125.0	73.3	125.0
111"		12	56.6	56.6	73.3	125.0	73.3	125.0	73.3	125.0
74"	50-5/8" (4)	8	64.3	64.3	73.3	93.4	73.3	109.5	73.3	110.4
106-1/4"		12	–	–	73.3	80.3	–	–	73.3	94.9
111"		12	–	–	73.3	79.3	–	–	73.3	93.8
74"	63" (5)	8	47.6	47.6	69.1	69.1	73.3	81.1	73.3	81.7
106-1/4"		12	–	–	56.1	56.1	–	–	66.3	66.3
111"		12	–	–	55.0	55.0	–	–	65.0	65.0

A = NO. OF ANCHORS PER HEAD & SILL
( ) = NO. OF ANCHORS PER JAMB

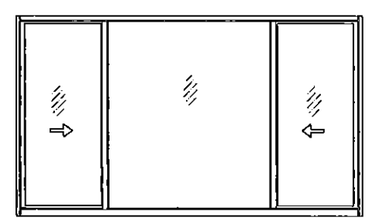

OPERATING VENTS TO BE 1/4 OF THE WINDOW WIDTH

ALL EXTERIOR(+) LOADS SHOWN ON THIS SHEET ARE
FOR WINDOWS WITH APPLIED RISER AT FRAME SILL
FOR STD. SILL (NO RISER) LIMIT EXTERIOR(+) LOADS TO 65.0 PSF
SEE DETAIL ON SHEET 3.

NOTE:
GLASS CAPACITIES ARE BASED ON
ASTM E1300-09 (3 SEC. GUSTS)
AND FLORIDA BUILDING COMMISSION
DECLARATORY STATEMENT DCA05-DEC-219

PRODUCT REVISED
as complying with the Florida
Building Code
Acceptance No 15-0311.03
Expiration Date 09/27/2017
By Miami-Dade Product Control

Engr: JAVAD AHMAD
CIVIL
FLA. PE # 70592
C.A.N. 3538
JUL 31 2015

AL-FAROOQ CORPORATION
ENGINEERS & PRODUCT DEVELOPMENT
1235 S.W. 87 AVE
MIAMI, FLORIDA 33174
TEL. (305) 264-8100 FAX. (305) 262-6978

COMP-ANL\W07-50VV

SERIES 1200 ALUM HORIZONTAL ROLLING WDW. (N.I.)

Labrador & Fundora Corp.
dba-V & V Windows
2355 West 4th Ave.
Hialeah, Fl. 33010
TEL. (305) 888-4151 FAX. (305) 888-1042

revisions:

no	date	by	description
A	08.23.07		REV. PER BCCO COMMENTS
B	02.16.12		UPDATED TO 2010 FBC
C	02.11.15		UPDATED TO 2014 FBC
D	07.27.15		NO CHANGE THIS SHEET

date: 05-29-07
scale: 1/2"=1'-0"
dr. by: HAMID
chk. by:

drawing no. W07-50

sheet 2 of 6

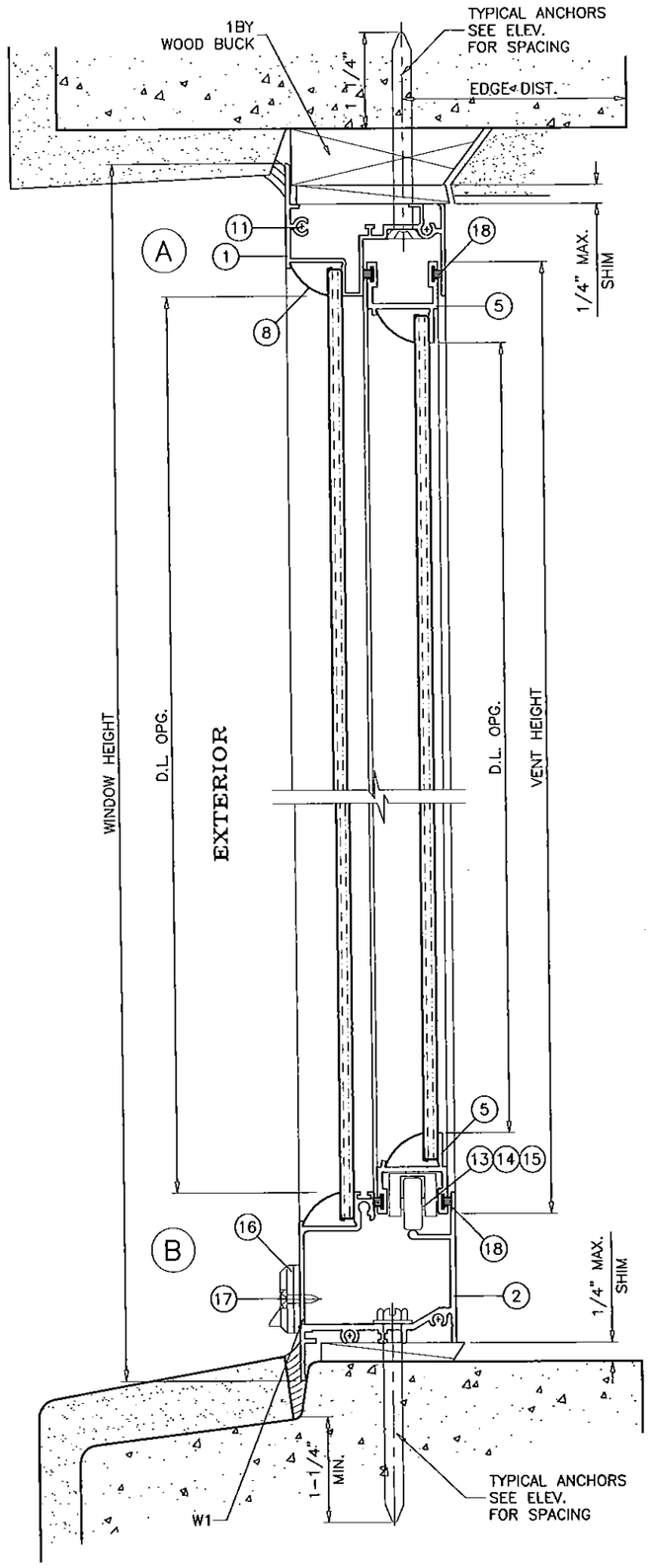

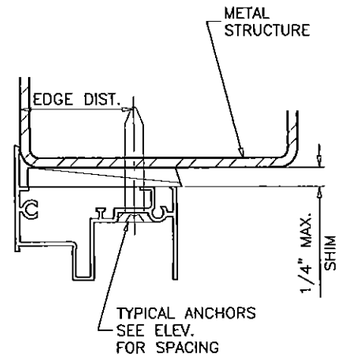

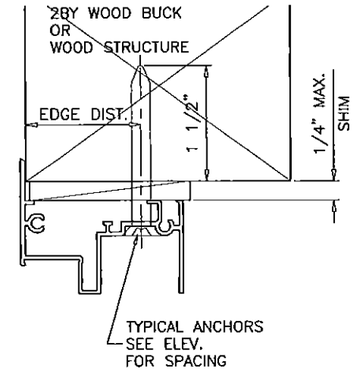

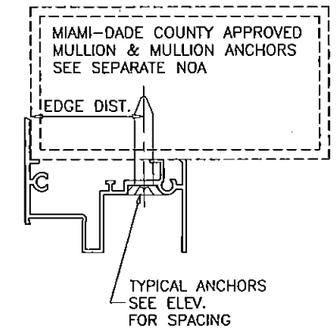

WOOD BUCKS AND METAL STRUCTURE NOT BY V & V WINDOWS MUST SUSTAIN LOADS IMPOSED BY GLAZING SYSTEM AND TRANSFER THEM TO THE BUILDING STRUCTURE.

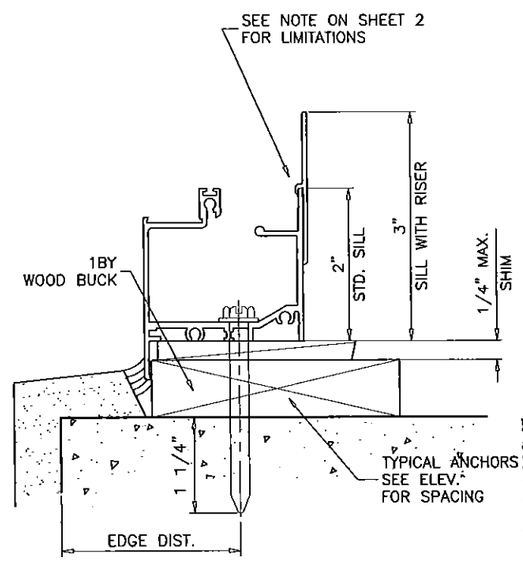

TYPICAL ANCHORS: SEE ELEV. FOR SPACING

1/4" DIA. ULTRACON BY 'ELCO' (Fu=177 KSI, Fy=155 KSI)

INTO 2BY WOOD BUCKS OR WOOD STRUCTURES
1-1/2" MIN. PENETRATION INTO WOOD (HEAD/SILL/JAMBS)

THRU 1BY BUCKS INTO CONC. OR MASONRY
1-1/4" MIN. EMBED INTO CONCRETE (HEAD/SILL)
1-1/4" MIN. EMBED INTO CONC. OR MASONRY (JAMBS)

DIRECTLY INTO CONC. OR MASONRY
1-1/4" MIN. EMBED INTO CONCRETE (HEAD/SILL)
1-1/4" MIN. EMBED INTO CONC. OR MASONRY (JAMBS)

#14 SMS OR SELF DRILLING SCREWS (GRADE 2 CRS)

INTO MIAMI-DADE COUNTY APPROVED MULLIONS (MIN. THK. = 1/8")

INTO METAL STRUCTURES
STEEL : 1/8" THK. MIN. (Fy = 36 KSI MIN.)
ALUMINUM : 1/8" THK. MIN. (6063-T5 MIN.)
(STEEL IN CONTACT WITH ALUMINUM TO BE PLATED OR PAINTED)

TYPICAL EDGE DISTANCE

INTO CONCRETE AND MASONRY = 2-1/2" MIN.
INTO WOOD STRUCTURE = 1" MIN.
INTO METAL STRUCTURE = 3/4" MIN.

WOOD AT HEAD, SILL OR JAMBS SG = 0.55 MIN.
CONCRETE AT HEAD, SILL OR JAMBS f'c = 3000 PSI MIN.
C-90 HOLLOW/FILLED NORMAL WEIGHT BLOCK AT JAMBS f'm = 2000 PSI MIN.

SEALANTS:

ALL JOINTS AND FRAME CONNECTIONS SEALED WITH ACRYLIC CAULK UN1993 BY 'SCHNEE MOREHEAD'.

WEEPHOLES:

W1 = 3/8" X 1/8" WEEPHOLES AT 5" FROM EACH END WITH PLASTIC BAFFLE.

PRODUCT REVISED
as complying with the Florida Building Code
Acceptance No 15-0311.03
Expiration Date 09/27/2017
By Manuel Perez
Miami Dade Product Control

Engr: JAVAD AHMAD
CIVIL
FLA. PE # 70592
C.A.N. 3538
JUL 31 2015

AL-FAROOQ CORPORATION
ENGINEERS & PRODUCT DEVELOPMENT
1235 S.W. 87 AVE
MIAMI, FLORIDA 33174
TEL (305) 264-8100 FAX. (305) 262-6978
COMP-ANL\W07-50VV

SERIES 1200 ALUM HORIZONTAL ROLLING WDW. (N.I.)

Labrador & Fundora Corp.
dba-V & V Windows
2355 West 4th Ave.
Hialeah, Fl. 33010
TEL. (305) 888-4151 FAX. (305) 888-1042

revisions:

no	date	by	description
A	08.23.07		REV. PER BCCO COMMENTS
B	02.16.12		NO CHANGE THIS SHEET
C	02.11.15		UPDATED TO 2014 FBC
D	07.27.15		REV. PER RER COMMENTS

date: 05-29-07
scale: 1/2" = 1"
dr. by: HAMID
chk. by:

drawing no.
W07-50

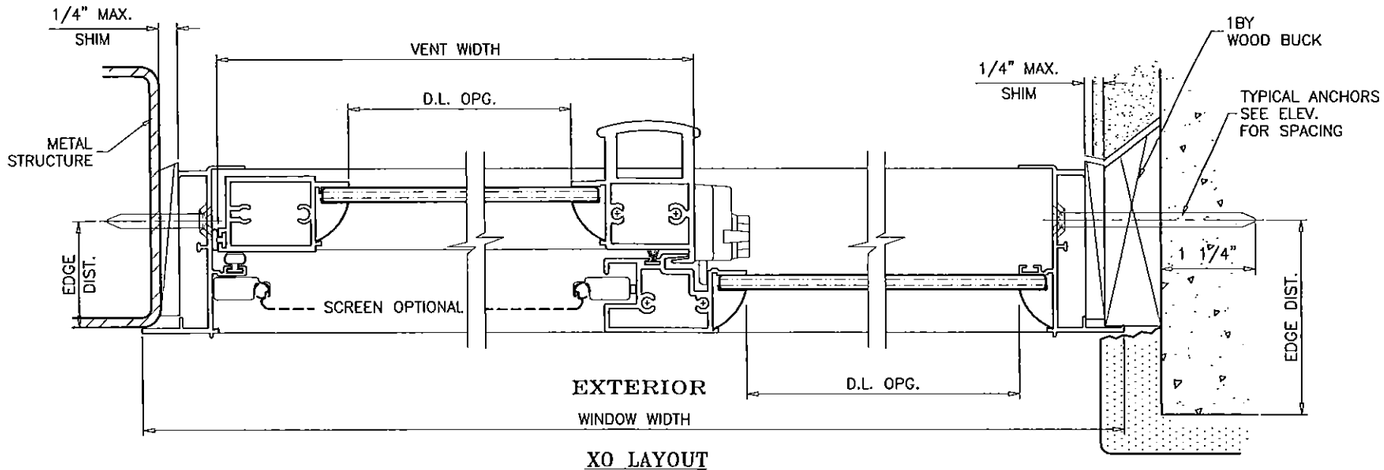

XO LAYOUT
OX OPPOSITE

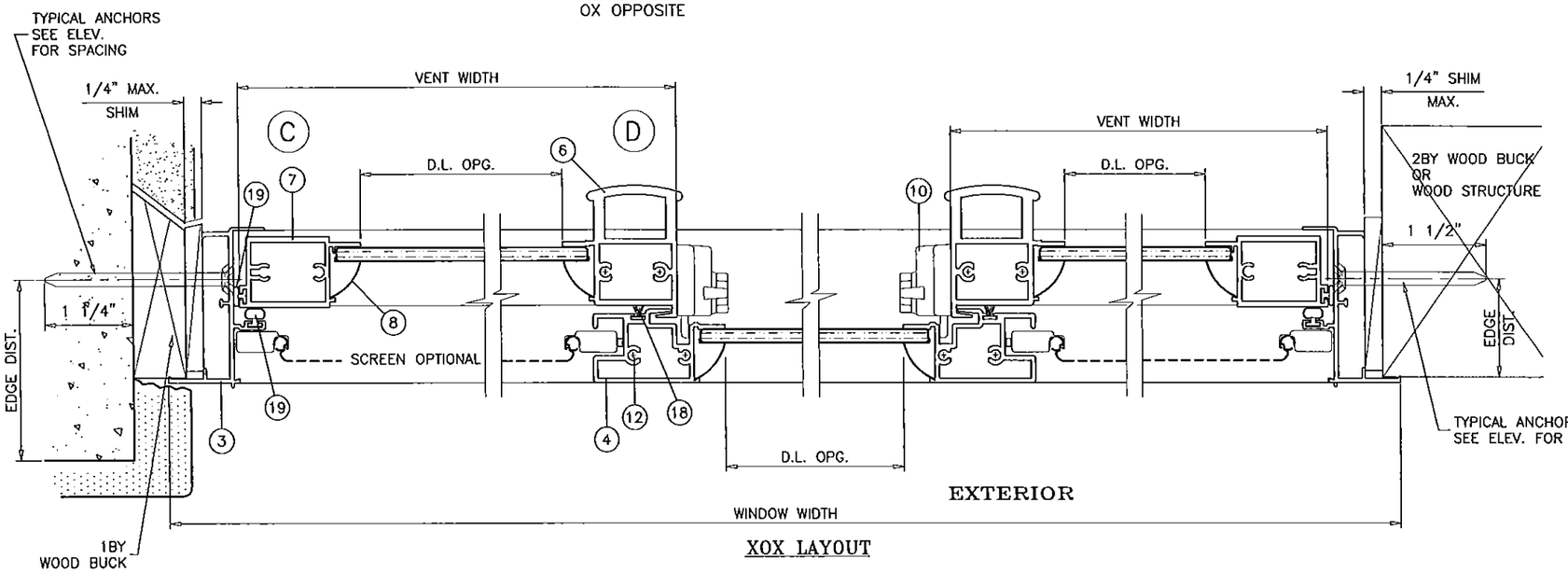

XOX LAYOUT

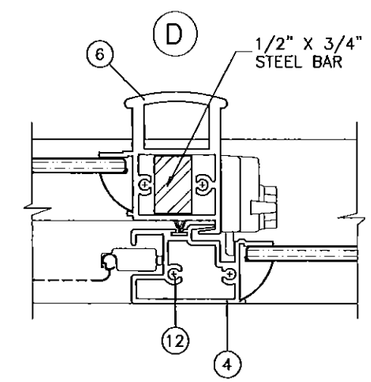

REINFORCED MTG. STILES
SEE SHEET 2 FOR CAPACITY

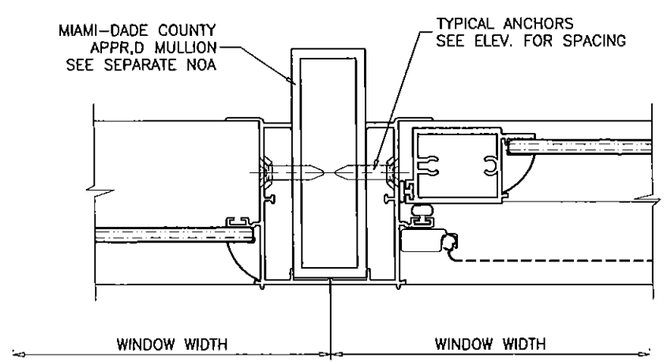

PRODUCT REVISED
as complying with the Florida
Building Code
Acceptance No 15-0311.03
Expiration Date 09/27/2017
By Manuel Diaz
Miami Dade Product Control

Engr: JAVAD AHMAD
CIVIL
FLA. PE # 70592
C.A.N. 3538
JUL 31 2015

AL-FAROOQ CORPORATION
ENGINEERS & PRODUCT DEVELOPMENT
1235 S.W. 87 AVE
MIAMI, FLORIDA 33174
TEL. (305) 264-8100 FAX. (305) 262-6978
COMP-ANL\W07-50VV

SERIES 1200 ALUM HORIZONTAL ROLLING WDW. (N.I.)

Labrador & Fundora Corp.
dba-V & V Windows
2355 West 4th Ave.
Hialeah, Fl. 33010
TEL. (305) 888-4151 FAX. (305) 888-1042

revisions:

no	date	by	description
A	08.23.07		REV. PER BCCO COMMENTS
B	02.16.12		NO CHANGE THIS SHEET
C	02.11.15		UPDATED TO 2014 FBC
D	07.27.15		REV. PER RER COMMENTS

date: 05-29-07
scale: 1/2" = 1"
dr. by: HAMID
chk. by:

drawing no.
W07-50

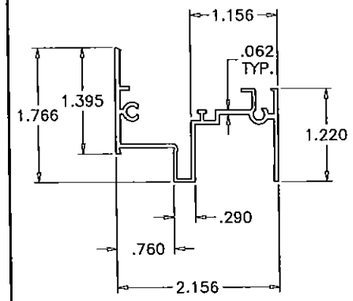

1 FRAME HEAD

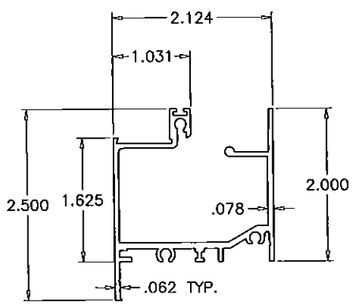

2 FRAME SILL

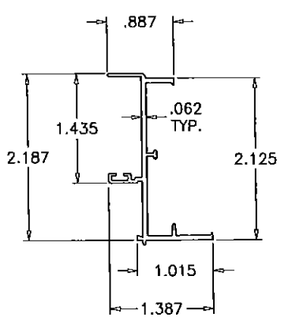

3 FRAME JAMB

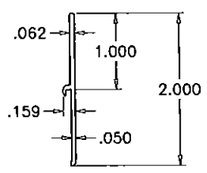

9 SILL RISER

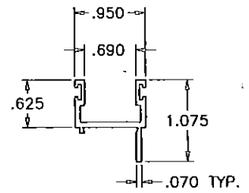

5 VENT TOP/BOTTOM RAIL

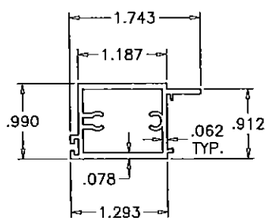

7 JAMB STILE

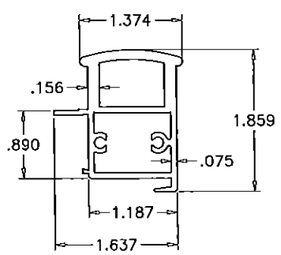

6 MEETING STILE

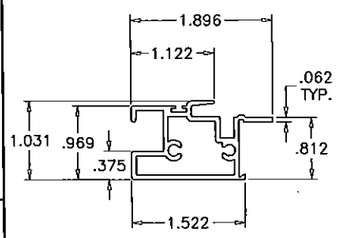

4 FIXED MTG. STILE

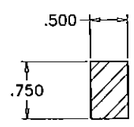

21 MTG. STILE REINFORCING

ITEM	PART #	QUANTITY	DESCRIPTION	MATERIAL	MANF./SUPPLIER/REMARKS
1	VW-4132	1	FRAME HEAD	6063-T6	–
2	5137	1	FRAME SILL	6063-T6	–
3	VW-4129A	2	FRAME JAMB	6063-T6	–
4	V-1001	1/ VENT	FIXED MTG. RAIL	6063-T5	–
5	VW-4133	2/ VENT	VENT TOP & BOTTOM RAIL	6063-T5	–
6	VW-008A	1/ VENT	VENT INTERLOCK	6063-T5	–
7	VW-001A	1/ VENT	VENT JAMB STILE	6063-T5	–
8	–	AS REQD.	GLAZING BEAD (OPTIONAL)	ALUMINUM	ROLL FORMED
9	VW-009	AS REQD.	APPLIED SILL RISER	6063-T5	–
10	–	2/ VENT	SWEEP LATCH	–	AT 7-3/4" FROM EACH END
11	–	AS REQD.	FRAME & VENT ASSY SCREWS	–	#8 X 1" PH CRS SMS
12	–	2/ VENT	SILL END FIXED RAIL SCREW	–	#8 X 2-1/2" PH SMS
13	–	4/ VENT	ROLLER HOUSING & GUIDE	–	–
14	–	2/ VENT	ROLLER	–	BRASS OR ST. STEEL
15	–	2/ VENT	ROLLER PIN	ST. STEEL	–
16	WPHL-100	2	BAFFLE	–	M & M PLASTICS
17	–	2/ BAFFLE	BAFFLE SCREW	–	#6 X 1/2" PH SMS
18	W1319IN	AS REQD.	FIN SEAL PILE W'STRIPPING	–	ULTRAFAB
19	9146	AS REQD.	BULB W'STRIPPING	VINYL	–
20	–	OPTIONAL	SCREEN	–	5/16" BOX
21	–	AS REQD.	MTG. STILE REINFORCING	STEEL	ASTM A36, Fy = 36 KSI
22	–	AS REQD.	SETTING BLOCKS	EPDM	DUROMETER 80±5 SHORE A

PRODUCT REVISED
as complying with the Florida
Building Code
Acceptance No 15-0311.03
Expiration Date 09/27/2017
By
Miami-Dade Product Control

Engr: JAVAD AHMAD
CIVIL
FLA. PE # 70592
D.A.N. 3538
JUL 31 2015

AL-FAROOQ CORPORATION
ENGINEERS & PRODUCT DEVELOPMENT
1235 S.W. 87 AVE
MIAMI, FLORIDA 33174
TEL. (305) 264-8100 FAX. (305) 262-6978
COMP-ANL\W07-50VV

SERIES 1200 ALUM HORIZONTAL ROLLING WDW. (N.I.)

Labrador & Fundora Corp.
dba-V & V Windows
2355 West 4th Ave.
Hialeah, Fl. 33010
TEL. (305) 888-4151 FAX. (305) 888-1042

revisions:

no	date	by	description
A	08.23.07		REV. PER BCCO COMMENTS
B	02.16.12		UPDATED TO 2010 FBC
C	02.11.15		UPDATED TO 2014 FBC
D	07.27.15		REV. PER RER COMMENTS

date: 05-29-07
scale: 1/2" = 1"
dr. by: HAMID
chk. by:

drawing no.
W07-50

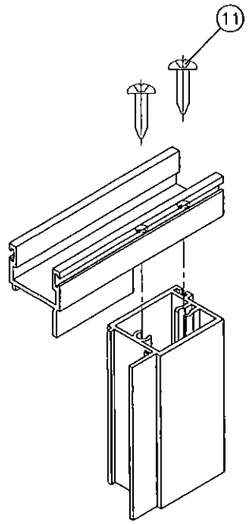

VENT TOP/BOTTOM CORNERS

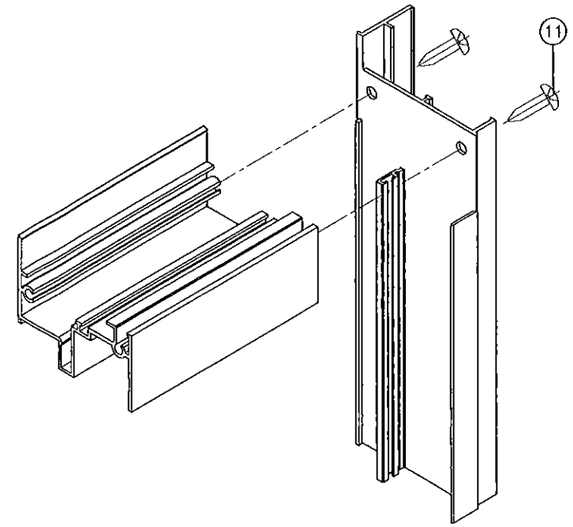

FRAME TOP CORNER

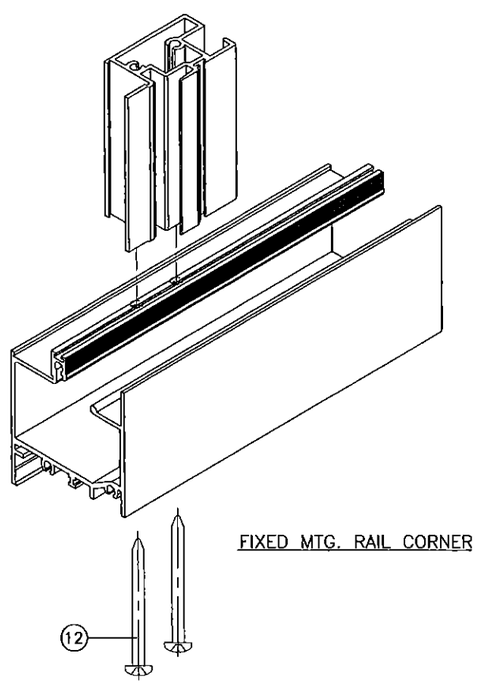

FIXED MTG. RAIL CORNER

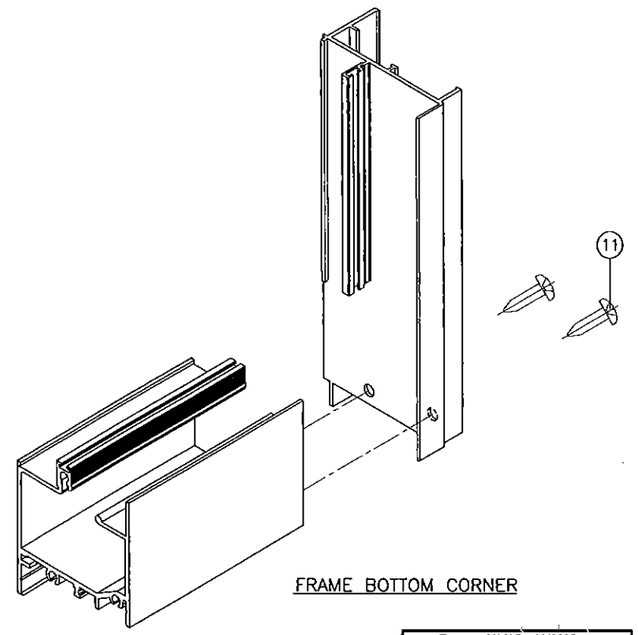

FRAME BOTTOM CORNER

PRODUCT REVISED
as complying with the Florida
Building Code
Acceptance No. 15-0311.03
Expiration Date 09/27/2017
By
Miami-Dade Product Control

Engr: JAVAD AHMAD
CIVIL
FLA. PE # 70592
C.A.N. 3538

JUL 31 2015

AL-FAROOQ CORPORATION
ENGINEERS & PRODUCT DEVELOPMENT
1235 S.W. 87 AVE
MIAMI, FLORIDA 33174
TEL. (305) 264-8100 FAX. (305) 262-6978

COMP-ANL\W07-50VV

SERIES 1200 ALUM HORIZONTAL ROLLING WDW. (N.I.)

Labrador & Fundora Corp.
dba-V & V Windows
2355 West 4th Ave.
Hialeah, Fl. 33010
TEL. (305) 888-4151 FAX. (305) 888-1042

revisions:

no	date	by	description
A	08.23.07		REV. PER BCCO COMMENTS
B	02.16.12		NO CHANGE THIS SHEET
C	02.11.15		NO CHANGE THIS SHEET
D	07.27.15		NO CHANGE THIS SHEET

date: 05-29-07
scale: 1/2" = 1"
dr. by: HAMID
chk. by:

drawing no.
W07-50

sheet 6 of 6