MIAMI-DADE COUNTY
DEPARTMENT OF REGULATORY AND ECONOMIC RESOURCES (RER)
BOARD AND CODE ADMINISTRATION DIVISION

MIAMI-DADE COUNTY
PRODUCT CONTROL SECTION
11805 SW 26 Street, Room 208
Miami, Florida 33175-2474
T (786) 315-2590 F (786) 315-2599
www.miamidade.gov/economy

NOTICE OF ACCEPTANCE (NOA)

Universal Consumer Products, Inc.
2801 East Beltline NE
Grand Rapids, MI 49525

SCOPE:
This NOA is being issued under the applicable rules and regulations governing the use of construction materials. The documentation submitted has been reviewed and accepted by Miami-Dade County RER- Product Control Section to be used in Miami Dade County and other areas where allowed by the Authority Having Jurisdiction (AHJ).

This NOA shall not be valid after the expiration date stated below. The Miami-Dade County Product Control Section (In Miami Dade County) and/or the AHJ (in areas other than Miami Dade County) reserve the right to have this product or material tested for quality assurance purposes. If this product or material fails to perform in the accepted manner, the manufacturer will incur the expense of such testing and the AHJ may immediately revoke, modify, or suspend the use of such product or material within their jurisdiction. RER reserves the right to revoke this acceptance, if it is determined by Miami-Dade County Product Control Section that this product or material fails to meet the requirements of the applicable building code.

This product is approved as described herein, and has been designed to comply with the High Velocity Hurricane Zone of the Florida Building Code.

DESCRIPTION: Extruded PVC Vinyl Fencing Systems

APPROVAL DOCUMENT: Drawing No. MD511B, titled "PVC Fence", sheets 1 through 11 of 11, prepared by Emma T. Mellinger, P.E., dated August 16, 2012, signed and sealed by Emma T. Mellinger, P.E., on February 27, 2015, bearing the Miami-Dade County Product Control Renewal stamp with the Notice of Acceptance number and the expiration date by the Miami-Dade County Product Control Section.

MISSILE IMPACT RATING: None

LABELING: Each fence section shall bear a permanent label with the manufacturer's name or logo, Woodbridge, Ontario, Canada and the following statement: "Miami-Dade County Product Control Approved", unless otherwise noted herein.

RENEWAL of this NOA shall be considered after a renewal application has been filed and there has been no change in the applicable building code negatively affecting the performance of this product.

TERMINATION of this NOA will occur after the expiration date or if there has been a revision or change in the materials, use, and/or manufacture of the product or process. Misuse of this NOA as an endorsement of any product, for sales, advertising or any other purposes shall automatically terminate this NOA. Failure to comply with any section of this NOA shall be cause for termination and removal of NOA.

ADVERTISEMENT: The NOA number preceded by the words Miami-Dade County, Florida, and followed by the expiration date may be displayed in advertising literature. If any portion of the NOA is displayed, then it shall be done in its entirety.

INSPECTION: A copy of this entire NOA shall be provided to the user by the manufacturer or its distributors and shall be available for inspection at the job site at the request of the Building Official.

This NOA **renews NOA #13-0115.01** and consists of this page 1, evidence submitted pages E-1, E-2, & E-3 as well as approval document mentioned above.
The submitted documentation was reviewed by **Helmy A. Makar, P.E., M.S.**

MIAMI-DADE COUNTY APPROVED

Helmy A. Makar
06/04/2015

NOA No. 15-0406.02
Expiration Date: 05/12/2020
Approval Date: 06/04/2015

Universal Consumer Products, Inc.

NOTICE OF ACCEPTANCE: EVIDENCE SUBMITTED

1. EVIDENCE SUBMITTED UNDER PREVIOUS APPROVAL # 10-0209.10

A. DRAWINGS

1. *Drawing No. MD511A01, titled " PVC Fence ", sheets 1 through 3 of 3, prepared by Emma T. Mellinger, P.E., dated DECEMBER 15, 2009, signed and sealed by Emma T. Mellinger, P.E., on April 19, 2010.*

B. TESTS

1. *Test report on Uniform Static Air Pressure Test, prepared by Intertek Testing Services NA LTD., Report # 3191355TOR-002, dated January 21, 2010, signed and sealed by Rick Curkeet, P.E.*
2. *Test report on Ignition Properties of Plastic Test, per ASTM D1929-96, prepared by Intertek Testing Services NA LTD., Report # 3193687SAT-001C, dated November 10, 2009, signed by Servando Romo.*
3. *Test report on Burning of Plastic Test, per ASTM D 2843-99, prepared by Intertek Testing Services NA LTD., Report # 3193687SAT-001B, dated November 10, 2009, signed by Servando Romo.*
4. *Test report on Rate of Burning of Plastic Test, per ASTM D 635-06, prepared by Intertek Testing Services NA LTD., Report # 3193687SAT-001A, dated November 9, 2009, signed by Servando Romo.*

C. CALCULATIONS

1. *Calculation to comply with FBC 2007 edition, 1 sheet, prepared by Emma T. Mellinger, P.E., dated April 19, 2010, signed and sealed by Emma T. Mellinger, P.E.*

D. QUALITY ASSURANCE

1. *By Miami-Dade County Building Code Compliance Office.*

E. MATERIAL CERTIFICATIONS

1. *Extruded Profile Technical Data sheet.*

2. EVIDENCE SUBMITTED UNDER PREVIOUS APPROVAL # 10-0727.01

A. DRAWINGS

1. *Drawing No. MD511A01, titled " PVC Fence ", sheets 1 through 10 of 10, prepared by Emma T. Mellinger, P.E., dated May 31, 2010, signed and sealed by Emma T. Mellinger, P.E., on December 08, 2010.*

Helmy A. Makar, P.E., M.S.
Product Control Unit Supervisor
NOA No. 15-0406.02
Expiration Date: 05/12/2020
Approval Date: 06/04/2015

NOTICE OF ACCEPTANCE: EVIDENCE SUBMITTED

B. TESTS

1. *Test report on Uniform Static Air Pressure Test, prepared by Intertek Testing Services NA LTD., Report # G100101136TOR-002, dated April 30, 2010, signed and sealed by Rick Curkeet, P.E., on May 11, 2010.*
2. *Test report on Uniform Static Air Pressure Test, prepared by Intertek Testing Services NA LTD., Report # G100101136TOR-004, dated May 26, 2010, signed and sealed by Rick Curkeet, P.E., on May 27, 2010.*
3. *Test report on Uniform Static Air Pressure Test, prepared by Intertek Testing Services NA LTD., Report # G100108459TOR-004, dated May 27, 2010, signed and sealed by Rick Curkeet, P.E., on May 27, 2010.*

C. CALCULATIONS

1. *Calculation to comply with FBC 2007 edition, 9 sheets, prepared by Emma T. Mellinger, P.E., dated July 27, 2010, signed and sealed by Emma T. Mellinger, P.E..*

D. QUALITY ASSURANCE

1. *By Miami-Dade County Building and Neighborhood Compliance Department (BNC).*

E. MATERIAL CERTIFICATIONS

1. *Extruded Profile Technical Data sheet.*

3. EVIDENCE SUBMITTED UNDER PREVIOUS APPROVAL # 13-0115.01

A. DRAWINGS

1. *Drawing No. MD511B, titled "PVC Fence", sheets 1 through 11 of 11, prepared by Emma T. Mellinger, P.E., dated August 16, 2012, signed and sealed by Emma T. Mellinger, P.E., on February 27, 2015.*

B. TESTS

1. *Test report on 24 hour Uniform Static Air Pressure Test, prepared by Intertek Testing Services NA LTD., Report # 100653699TOR-003, dated April 26, 2012, signed and sealed by Rick Curkeet, P.E.*

C. CALCULATIONS

1. *Calculation to comply with FBC 2010 edition, 1 sheet, prepared by Emma T. Mellinger, P.E., dated August 14, 2012, signed & sealed by Emma T. Mellinger, P.E.*

D. QUALITY ASSURANCE

1. *By Miami-Dade County Building Department of Regulatory and Economic Resources.*

E. MATERIAL CERTIFICATIONS

1. *Extruded Profile Technical Data sheet.*

Helmy A. Makar, P.E., M.S.
Product Control Unit Supervisor
NOA No. 15-0406.02
Expiration Date: 05/12/2020
Approval Date: 06/04/2015

NOTICE OF ACCEPTANCE: EVIDENCE SUBMITTED

4. NEW EVIDENCE SUBMITTED

A. DRAWINGS

1. None.

B. TESTS

1. None.

C. CALCULATIONS

1. None.

D. QUALITY ASSURANCE

1. By Miami-Dade County Building Department of Regulatory and Economic Resources.

E. MATERIAL CERTIFICATIONS

1. None.

Helmy A. Makar, P.E., M.S.
Product Control Unit Supervisor
NOA No. 15-0406.02
Expiration Date: 05/12/2020
Approval Date: 06/04/2015

REVISIONS	
A1	Current
B	Revise to 2010 FBC.

PRODUCT REVISED
as complying with the Florida
Building Code
Acceptance No 13-0115.01
Expiration Date 05/12/2015
By
Miami Dade Product Control

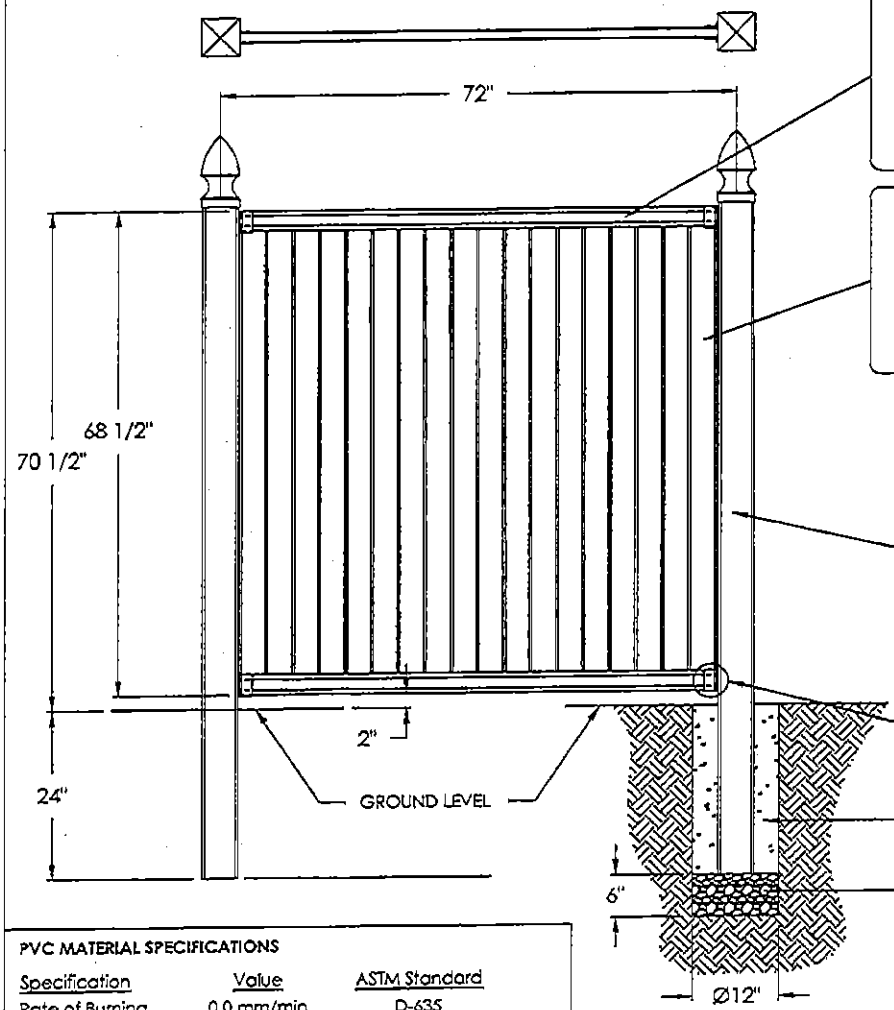

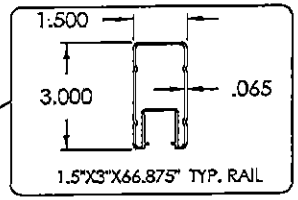

1.5"X3"X66.875" TYP. RAIL

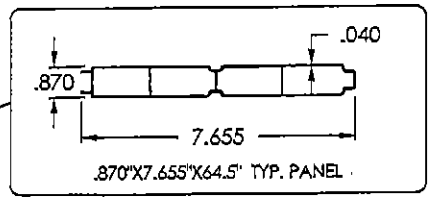

.870"X7.655"X64.5" TYP. PANEL

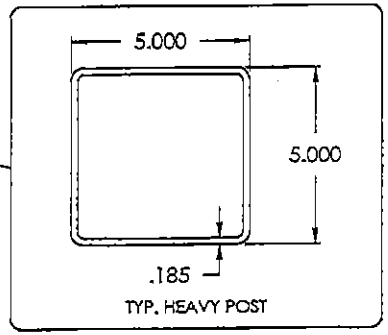

TYP. HEAVY POST

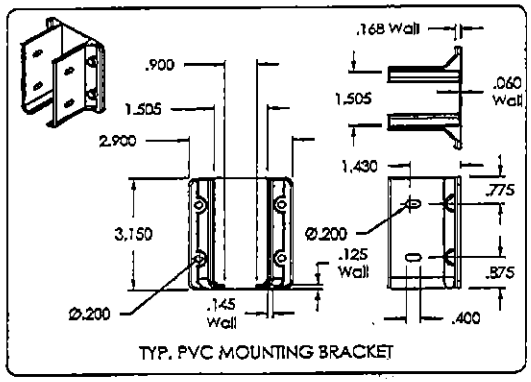

TYP. PVC MOUNTING BRACKET

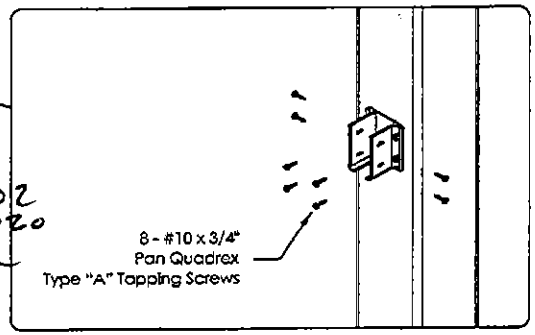

PRODUCT RENEWED
as complying with the Florida
Building Code
Acceptance No 15-0406.02
Expiration Date 05/12/2020
By
Miami Dade Product Control

PVC MATERIAL SPECIFICATIONS

Specification	Value	ASTM Standard
Rate of Burning	0.0 mm/min	D-635
Smoke Density	32.5	D-2843
Self Ignition		D-1929

EMMA T. MELLINGER
LICENSE
Nc 50049
STATE OF FLORIDA
PROFESSIONAL ENGINEER

2/27/15

CATEGORY 5
Engineering Services, Inc.
1600 S. Federal Highway, #207
Pompano Beach, FL 33062
(954) 784-6991: CA #25854

This Fence System Has Been Designed and Tested to Withstand a Basic Wind Speed of 115 mph (3-sec gust). In Compliance With the Provisions of the 2010 Florida Building Code, Including the High Velocity Hurricane Zone.

VISION EXTRUSIONS LIMITED
201 Zenway Blvd.
Woodbridge, ON
Canada
L4H 3H9

This document and the information contained is owned by and proprietary to Vision Extrusions Limited. By receipt hereof, the holder agrees not to use the information, disclose it to any third parties nor reproduce this document without the prior written consent of Vision Extrusions Limited, and agrees to return this document forthwith upon request.

TOLERANCES
X.XX ± 0.015
X.XXX ± 0.010
X.XXXX ± 0.005
DO NOT SCALE DRAWING
ALL DIMENSIONS ARE IN INCHES U.O.S.

PRODUCT TYPE: **6X6 PVC PRIVACY FENCE**

BRAND NAMES: AMAROSSA / VERANDA / UNIVERSAL CONSUMER PRODUCTS / DIMENSIONS / SEVERE WEATHER

SIZE: "A1"	COLOUR:	NA	MATERIAL:	As specified	TOOL NO.:	DATE:	08/16/12
SHEET: 1 of 11	DRAWN BY:	RJO/EM	SCALE:	NA	PART NO.:	DWG NO.:	MD511B

REVISIONS	
A1	Current
B	Revise to 2010 FBC.

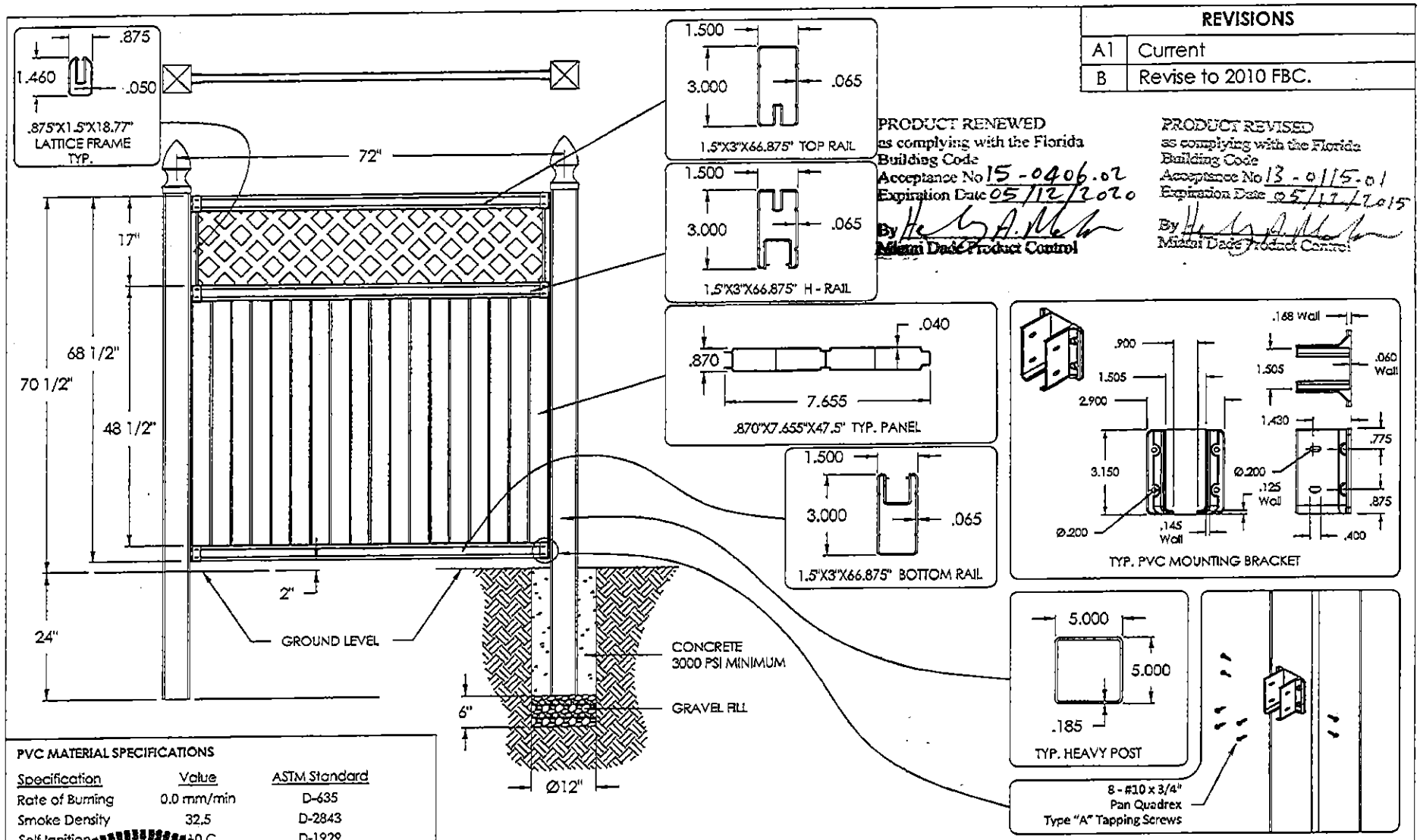

PRODUCT RENEWED
as complying with the Florida Building Code
Acceptance No 15-0406.02
Expiration Date 05/12/2020
By
Miami Dade Product Control

PRODUCT REVISED
as complying with the Florida Building Code
Acceptance No 13-0115.01
Expiration Date 05/12/2015
By
Miami Dade Product Control

PVC MATERIAL SPECIFICATIONS

Specification	Value	ASTM Standard
Rate of Burning	0.0 mm/min	D-635
Smoke Density	32.5	D-2843
Self Ignition	0 C	D-1929

EMMA T. MELLINGER
LICENSE
No 50049
STATE OF FLORIDA
PROFESSIONAL ENGINEER

2/27/15

CATEGORY 5
Engineering Services, Inc.
1600 S. Federal Highway. #207
Pompano Beach, FL 33062
(954) 784-6991: CA #25854

This Fence System Has Been Designed and Tested to Withstand a Basic Wind Speed of 115 mph (3-sec gust), in Compliance With the Provisions of the 2010 Florida Building Code, Including the High Velocity Hurricane Zone.

VISION™ EXTRUSIONS LIMITED
201 Zenway Blvd.
Woodbridge, ON
Canada
L4H 3H9

This document and the information contained is owned by and proprietary to Vision Extrusions Limited. By receipt hereof, the holder agrees not to use the information, disclose it to any third parties nor reproduce this document without the prior written consent of Vision Extrusions Limited, and agrees to return this document forthwith upon request.

TOLERANCES
X.XX ± 0.015
X.XXX ± 0.010
X.XXXX ± 0.005
DO NOT SCALE DRAWING
ALL DIMENSIONS ARE IN INCHES UNLS.

PRODUCT TYPE: **6X6 PVC LATTICE-TOP FENCE**

BRAND NAMES: AMAROSSA / VERANDA / UNIVERSAL CONSUMER PRODUCTS / DIMENSIONS / SEVERE WEATHER

SIZE: "A1"	COLOUR:	NA	MATERIAL:	As specified	TOOL NO.:	DATE:	08/16/12
SHEET: 2 of 11	DRAWN BY:	RJO/EM	SCALE:	NA	PART NO.:	DWG NO.:	MD511B

REVISIONS	
A1	Current
B	Revise to 2010 FBC.

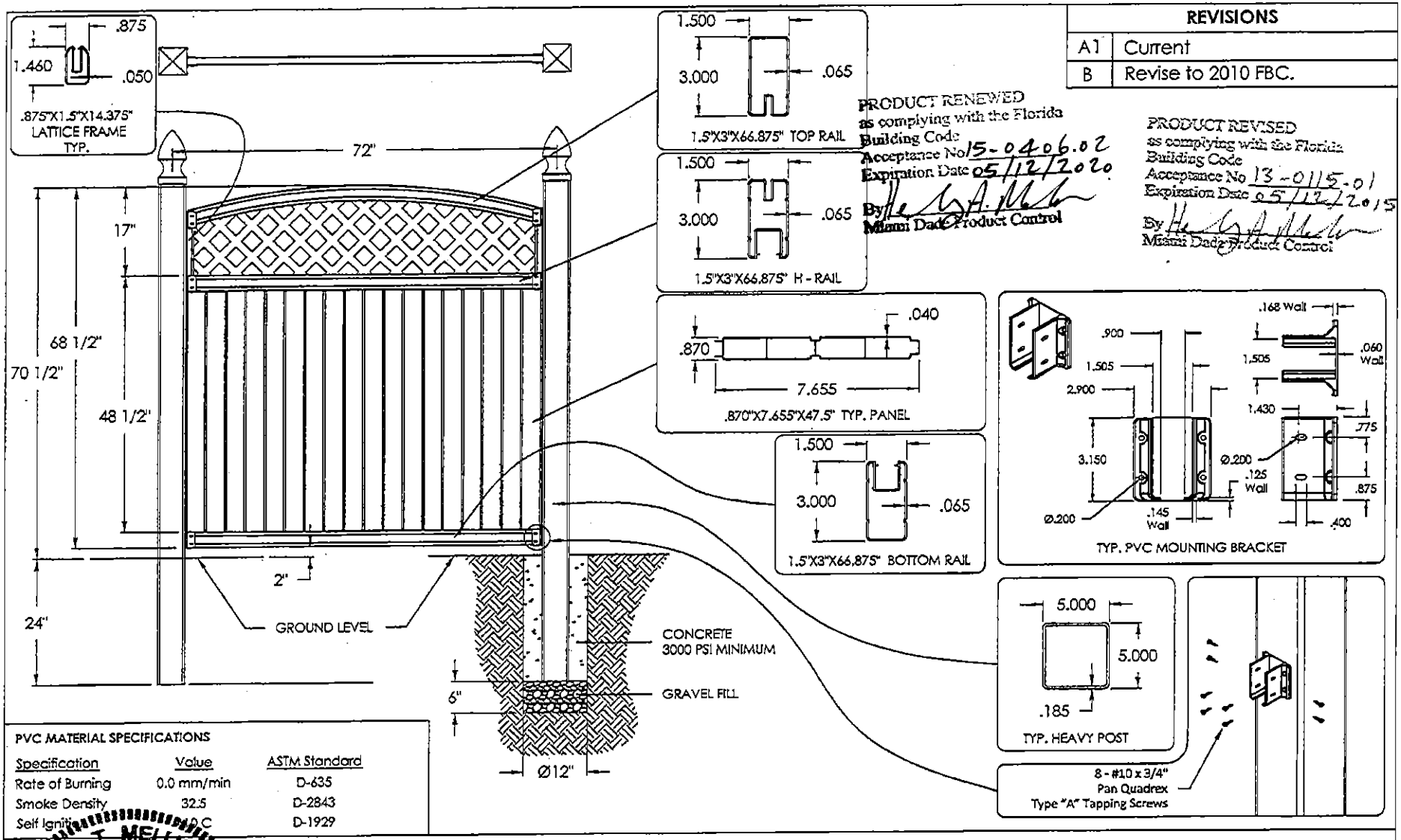

PRODUCT RENEWED
as complying with the Florida Building Code
Acceptance No 15-0406.02
Expiration Date 05/12/2020
By
Miami Dade Product Control

PRODUCT REVISED
as complying with the Florida Building Code
Acceptance No 13-0115.01
Expiration Date 05/12/2015
By
Miami Dade Product Control

PVC MATERIAL SPECIFICATIONS

Specification	Value	ASTM Standard
Rate of Burning	0.0 mm/min	D-635
Smoke Density	32.5	D-2843
Self Ignition	410 C	D-1929

EMMA T. MELLINGER
LICENSE
No 50049
STATE OF FLORIDA
PROFESSIONAL ENGINEER

2/27/15

CATEGORY 5
Engineering Services, Inc.
1600 S. Federal Highway, #207
Pompano Beach, FL 33062
(954) 784-6991: CA #25854

This Fence System Has Been Designed and Tested to Withstand a Basic Wind Speed of 115 mph (3-sec gust), In Compliance With the Provisions of the 2010 Florida Building Code, Including the High Velocity Hurricane Zone.

VISION EXTRUSIONS LIMITED
201 Zenway Blvd.
Woodbridge, ON
Canada
L4H 3H9

This document and the information contained is owned by and proprietary to Vision Extrusions Limited. By receipt hereof, the holder agrees not to use the information, disclose it to any third parties nor reproduce this document without the prior written consent of Vision Extrusions Limited, and agrees to return this document forthwith upon request.

TOLERANCES
X.XX ± 0.015
X.XXX ± 0.010
X.XXXX ± 0.005
DO NOT SCALE DRAWING
ALL DIMENSIONS ARE IN INCHES U.O.S.

PRODUCT TYPE: **6X6 PVC ARCHED LATTICE-TOP FENCE**

BRAND NAMES: AMAROSSA / VERANDA / UNIVERSAL CONSUMER PRODUCTS / DIMENSIONS / SEVERE WEATHER

SIZE:	"A1"	COLOUR:	NA	MATERIAL:	As specified	TOOL NO.:		DATE:	08/16/12
SHEET:	3 of 11	DRAWN BY:	RJO	SCALE:	NA	PART NO.:		DWG NO.:	MD511B

REVISIONS	
A2	Dimensions Added per Req.
B	Revise to 2010 FBC.

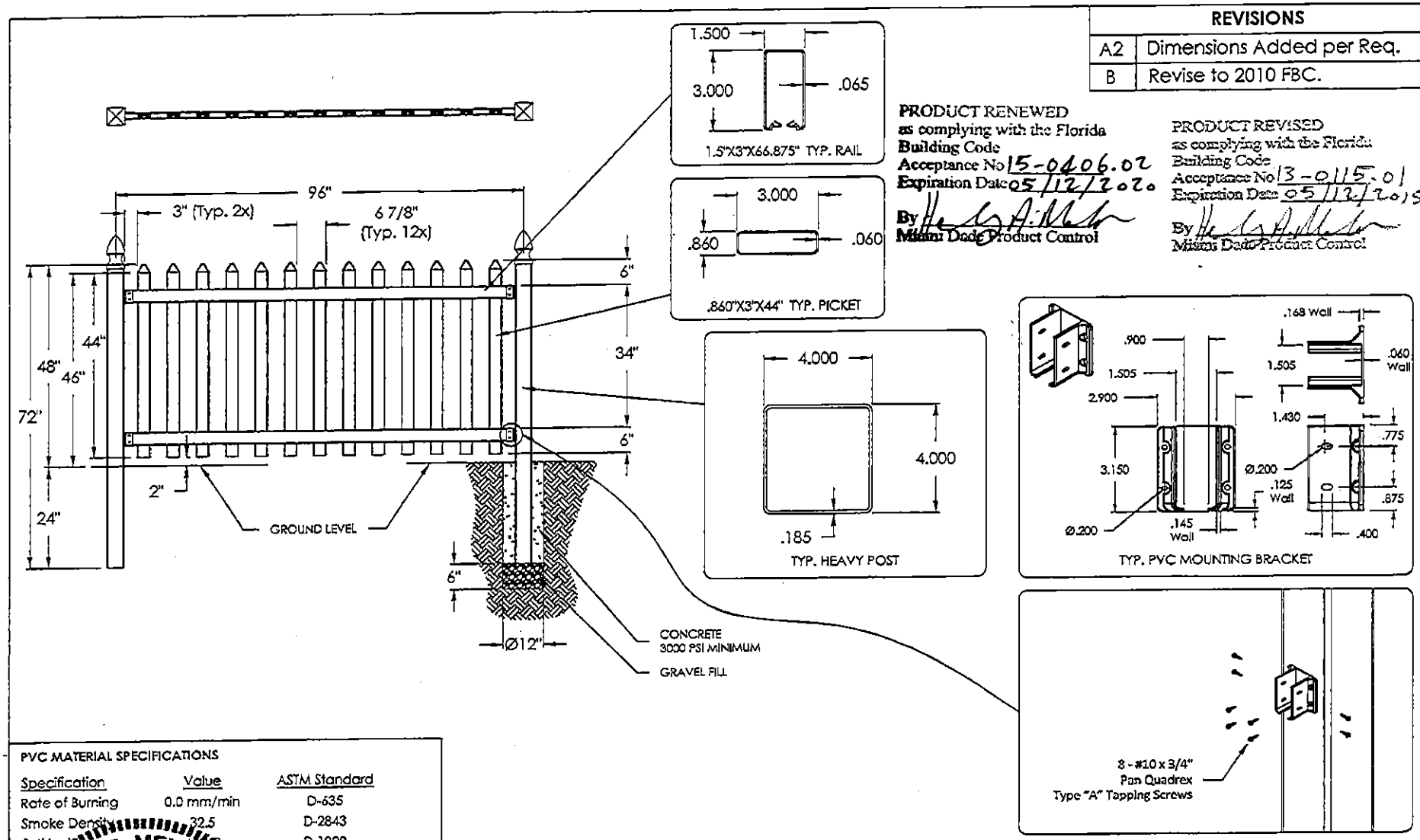

PRODUCT RENEWED
as complying with the Florida
Building Code
Acceptance No 15-0406.02
Expiration Date 05/12/2020
By
Miami Dade Product Control

PRODUCT REVISED
as complying with the Florida
Building Code
Acceptance No 13-0115.01
Expiration Date 05/12/2015
By
Miami Dade Product Control

PVC MATERIAL SPECIFICATIONS

Specification	Value	ASTM Standard
Rate of Burning	0.0 mm/min	D-635
Smoke Density	32.5	D-2843
Self Ignition	41	D-1929

EMMA T. MELLINGER
LICENSE
No 50049
STATE OF
FLORIDA
PROFESSIONAL ENGINEER

2/27/15

CATEGORY 5
Engineering Services, Inc.
1600 S. Federal Highway. #207
Pompano Beach, FL 33062
(954) 784-6991: CA #25854

This Fence System Has Been Designed and Tested to Withstand a Basic Wind Speed of 115 mph (3-sec gust), In Compliance With the Provisions of the 2010 Florida Building Code, Including the High Velocity Hurricane Zone.

VISION EXTRUSIONS LIMITED
201 Zenway Blvd.
Woodbridge, ON
Canada
L4H 3H9

This document and the information contained is owned by and proprietary to Vision Extrusions Limited. By receipt hereof, the holder agrees not to use the information, disclose it to any third parties nor reproduce this document without the prior written consent of Vision Extrusions Limited, and agrees to return this document forthwith upon request.

TOLERANCES
X.XX ± 0.015
X.XXX ± 0.010
X.XXXX ± 0.005
DO NOT SCALE DRAWING
ALL DIMENSIONS ARE IN INCHES U.O.S.

PRODUCT TYPE: **4X8 PVC SPACED-PICKET (3" PICKETS) FENCE**

BRAND NAMES: AMAROSSA / VERANDA / UNIVERSAL CONSUMER PRODUCTS / DIMENSIONS / SEVERE WEATHER

SIZE:	"A1"	COLOUR:	NA	MATERIAL:	As specified	TOOL NO.:	DATE: 08/16/12
SHEET:	4 of 11	DRAWN BY:	RJO	SCALE:	NA	PART NO.:	DWG NO.: MD511B

REVISIONS	
A2	Dimensions Added per Req.
B	Revise to 2010 FBC.

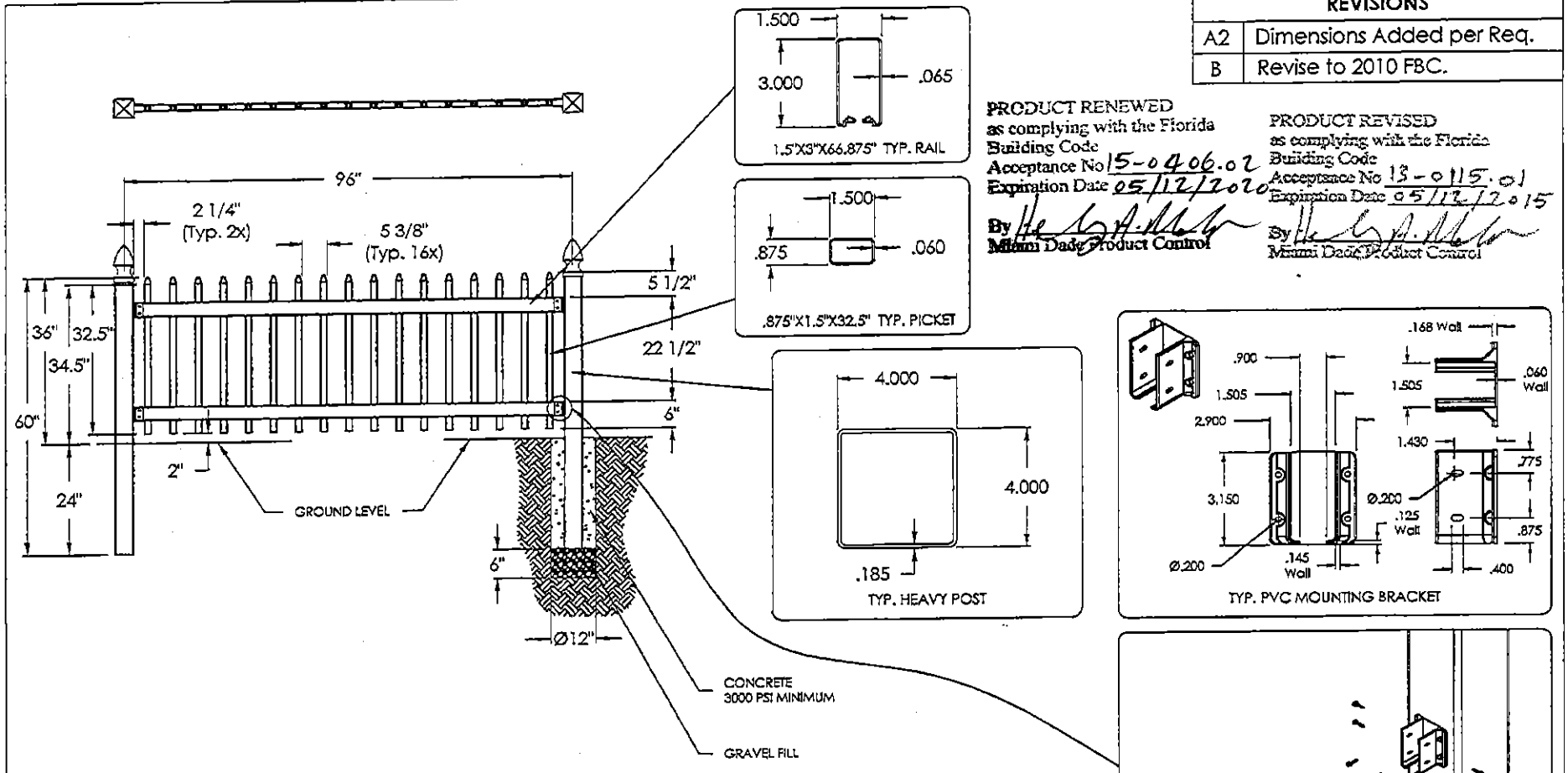

PRODUCT RENEWED
as complying with the Florida
Building Code
Acceptance No 15-0406.02
Expiration Date 05/12/2020
By
Miami Dade Product Control

PRODUCT REVISED
as complying with the Florida
Building Code
Acceptance No 13-0115.01
Expiration Date 05/12/2015
By
Miami Dade Product Control

PVC MATERIAL SPECIFICATIONS

Specification	Value	ASTM Standard
Rate of Burning	0.0 mm/min	D-635
Smoke Density	32.5	D-2843
Self Ignition	[illegible] C	D-1929

EMMA T. MELLINGER
LICENSE
No 50049
STATE OF
FLORIDA
PROFESSIONAL ENGINEER

2/27/15

CATEGORY 5
Engineering Services, Inc.
1600 S. Federal Highway, #207
Pompano Beach, FL 33062
(954) 784-6991: CA #25854

This Fence System Has Been Designed and Tested to Withstand a Basic Wind Speed of 115 mph (3-sec gust), In Compliance With the Provisions of the 2010 Florida Building Code, Including the High Velocity Hurricane Zone.

VISION™ EXTRUSIONS LIMITED
201 Zenway Blvd.
Woodbridge, ON
Canada
L4H 3H9

This document and the information contained is owned by and proprietary to Vision Extrusions Limited. By receipt hereof, the holder agrees not to use the information, disclose it to any third parties nor reproduce this document without the prior written consent of Vision Extrusions Limited, and agrees to return this document forthwith upon request.

TOLERANCES
X.XX ± 0.015
X.XXX ± 0.010
X.XXXX ± 0.005
DO NOT SCALE DRAWING
ALL DIMENSIONS ARE IN INCHES U.O.S.

PRODUCT TYPE: **3X8 PVC SPACED-PICKET FENCE**

BRAND NAMES: AMAROSSA / VERANDA / UNIVERSAL CONSUMER PRODUCTS / DIMENSIONS / SEVERE WEATHER

SIZE: "A1"	COLOUR: NA	MATERIAL: As specified	TOOL NO.:	DATE: 08/16/12
SHEET: 5 of 11	DRAWN BY: RJO/EM	SCALE: NA	PART NO.:	DWG NO.: MD511B

REVISIONS	
A2	Dimensions Added per Req.
B	Revise to 2010 FBC.

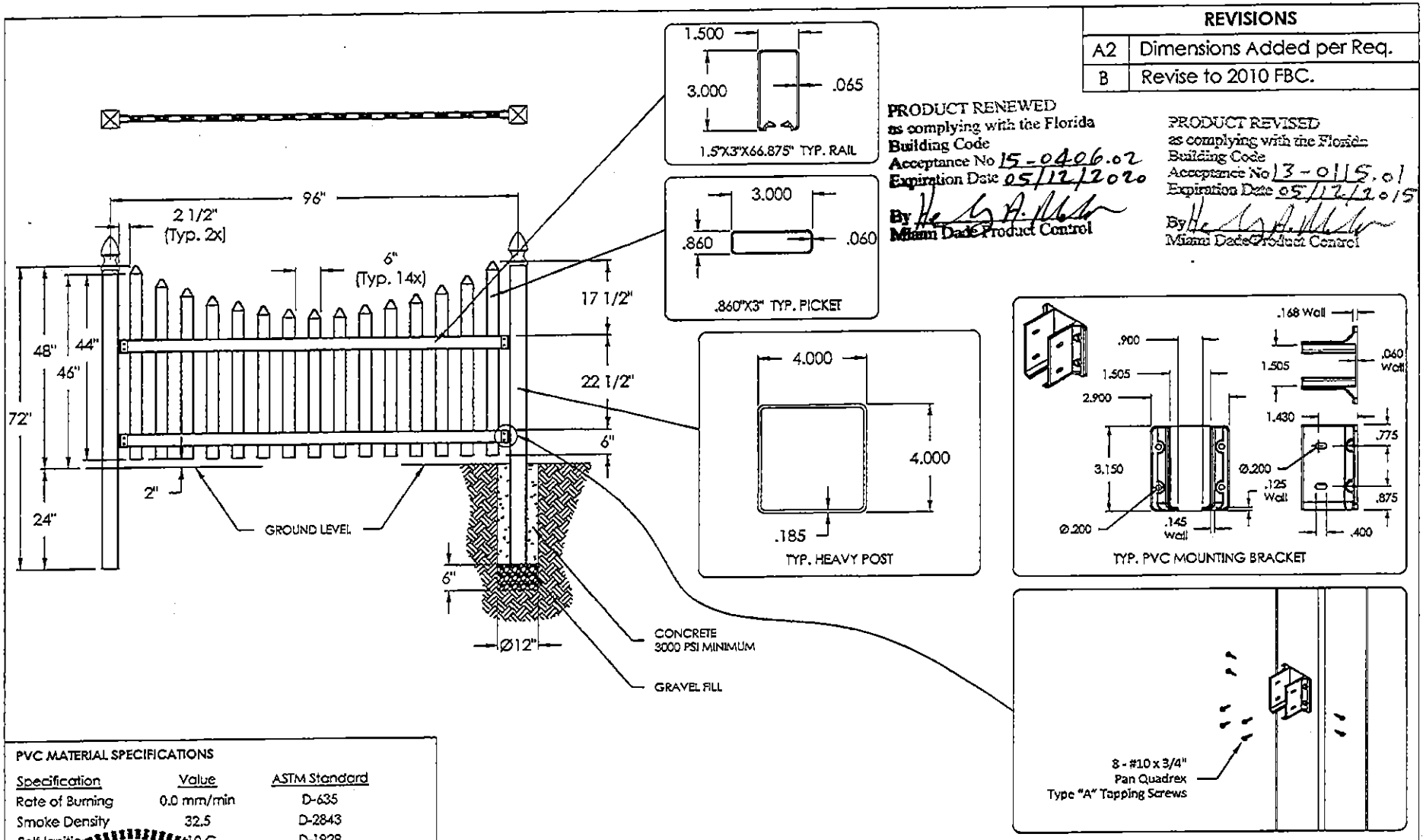

PRODUCT RENEWED
as complying with the Florida
Building Code
Acceptance No 15-0406.02
Expiration Date 05/12/2020
By
Miami Dade Product Control

PRODUCT REVISED
as complying with the Florida
Building Code
Acceptance No 13-0115.01
Expiration Date 05/12/2015
By
Miami Dade Product Control

PVC MATERIAL SPECIFICATIONS

Specification	Value	ASTM Standard
Rate of Burning	0.0 mm/min	D-635
Smoke Density	32.5	D-2843
Self Ignition	410 C	D-1929

EMMA T. MELLINGER
LICENSE
No 50049
STATE OF
FLORIDA
PROFESSIONAL ENGINEER

2/27/15

CATEGORY 5
Engineering Services, Inc.
1600 S. Federal Highway, #207
Pompano Beach, FL 33062
(954) 784-6991: CA #25854

This Fence System Has Been Designed and Tested to Withstand a Basic Wind Speed of 115 mph (3-sec gust), in Compliance With the Provisions of the 2010 Florida Building Code, Including the High Velocity Hurricane Zone.

VISION EXTRUSIONS LIMITED
201 Zenway Blvd.
Woodbridge, ON
Canada
L4H 3H9

This document and the information contained is owned by and proprietary to Vision Extrusions Limited. By receipt hereof, the holder agrees not to use the information, disclose it to any third parties nor reproduce this document without the prior written consent of Vision Extrusions Limited, and agrees to return this document forthwith upon request.

TOLERANCES
X.XX ± 0.015
X.XXX ± 0.010
X.XXXX ± 0.005
DO NOT SCALE DRAWING
ALL DIMENSIONS ARE IN INCHES U.O.S.

PRODUCT TYPE: 4X8 PVC SCALLOPED SPACED-PICKET (3" PICKETS) FENCE

BRAND NAMES: AMAROSSA / VERANDA / UNIVERSAL CONSUMER PRODUCTS / DIMENSIONS / SEVERE WEATHER

SIZE:	"A1"	COLOUR:	NA	MATERIAL:	As specified	TOOL NO.:	DATE: 08/16/12
SHEET:	6 of 11	DRAWN BY:	RJO/EM	SCALE:	NA	PART NO.:	DWG NO.: MD511B

REVISIONS	
A2	Dimensions Added per Req.
B	Revise to 2010 FBC.

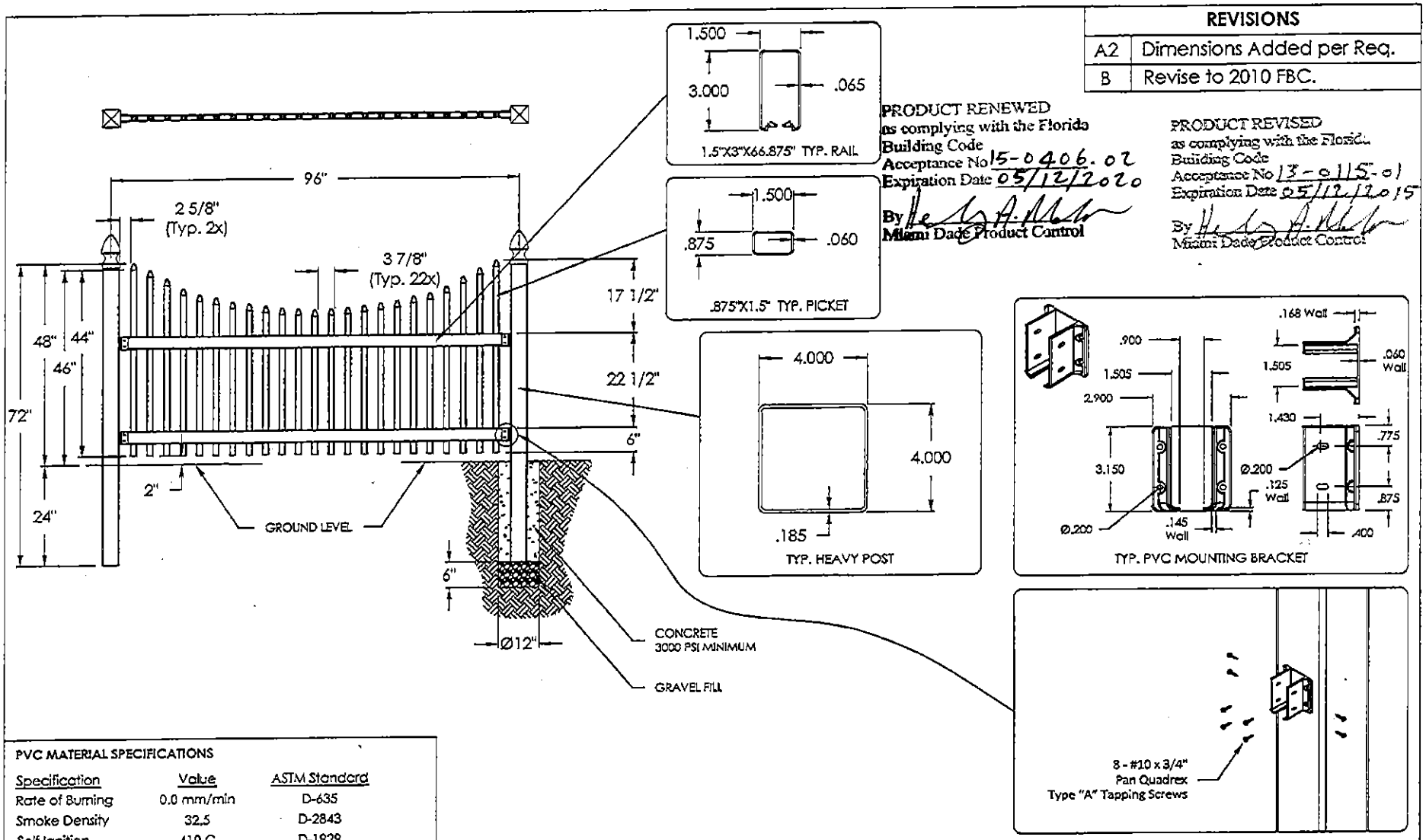

PRODUCT RENEWED
as complying with the Florida
Building Code
Acceptance No 15-0406.02
Expiration Date 05/12/2020
By
Miami Dade Product Control

PRODUCT REVISED
as complying with the Florida
Building Code
Acceptance No 13-0115.01
Expiration Date 05/12/2015
By
Miami Dade Product Control

PVC MATERIAL SPECIFICATIONS

Specification	Value	ASTM Standard
Rate of Burning	0.0 mm/min	D-635
Smoke Density	32.5	D-2843
Self Ignition	410 C	D-1929

EMMA T. MELLINGER
LICENSE
No 50049
STATE OF FLORIDA
PROFESSIONAL ENGINEER

2/27/15

CATEGORY 5
Engineering Services, Inc.
1600 S. Federal Highway, #207
Pompano Beach, FL 33062
(954) 784-6991: CA #25854

This Fence System Has Been Designed and Tested to Withstand a Basic Wind Speed of 115 mph (3-sec gust), in Compliance With the Provisions of the 2010 Florida Building Code, Including the High Velocity Hurricane Zone.

VISION EXTRUSIONS LIMITED
201 Zenway Blvd.
Woodbridge, ON
Canada
L4H 3H9

This document and the information contained is owned by and proprietary to Vision Extrusions Limited. By receipt hereof, the holder agrees not to use the information, disclose it to any third parties nor reproduce this document without the prior written consent of Vision Extrusions Limited, and agrees to return this document forthwith upon request.

TOLERANCES
X.XX ± 0.015
X.XXX ± 0.010
X.XXXX ± 0.005
DO NOT SCALE DRAWING
ALL DIMENSIONS ARE IN INCHES U.O.S.

PRODUCT TYPE: **4X8 PVC SCALLOPED PICKET (1½"-PICKETS) FENCE**

BRAND NAMES: AMAROSSA / VERANDA / UNIVERSAL CONSUMER PRODUCTS / DIMENSIONS / SEVERE WEATHER

SIZE:	"A1"	COLOUR:	NA	MATERIAL:	As specified	TOOL NO.:	DATE: 08/16/12
SHEET:	7 of 11	DRAWN BY:	RJO/EM	SCALE:	NA	PART NO.:	DWG NO.: MD511B

REVISIONS	
A2	Dimensions Added per Req.
B	Revise to 2010 FBC.

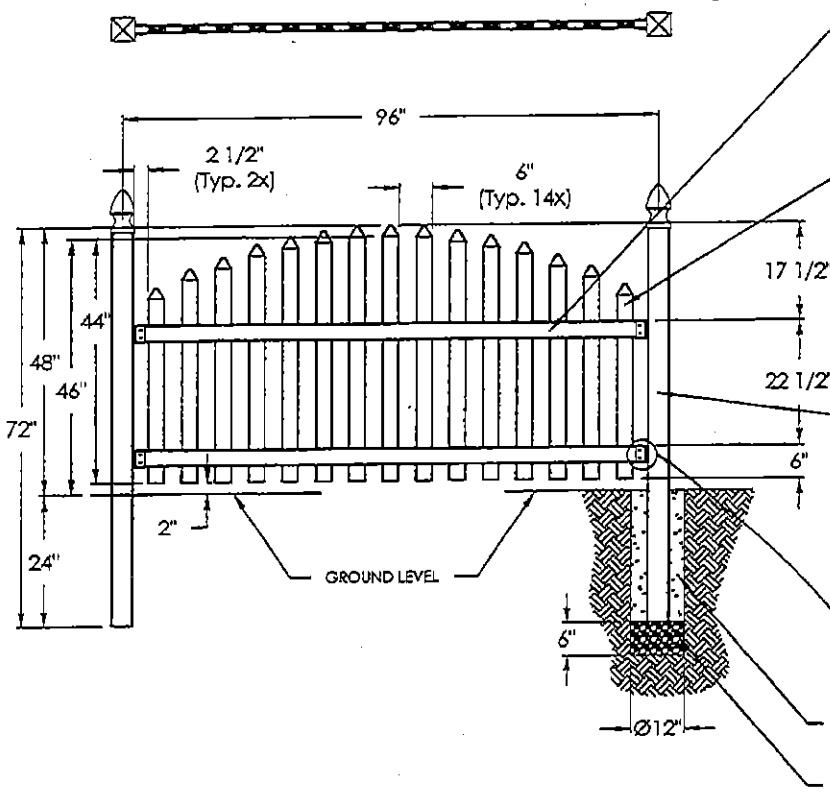

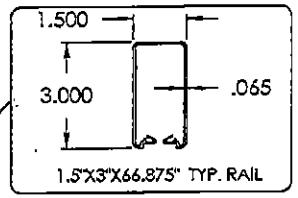

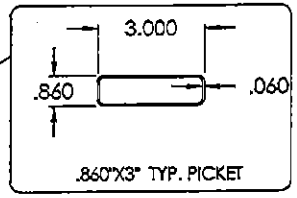

PRODUCT RENEWED
as complying with the Florida
Building Code
Acceptance No 15-0406.02
Expiration Date 05/12/2020
By
Miami Dade Product Control

PRODUCT REVISED
as complying with the Florida
Building Code
Acceptance No 13-0115.01
Expiration Date 05/12/2015
By
Miami Dade Product Control

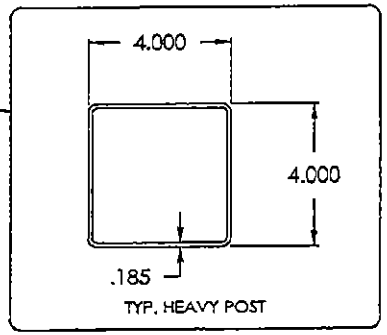

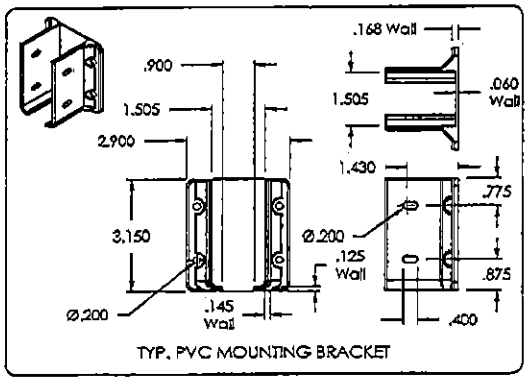

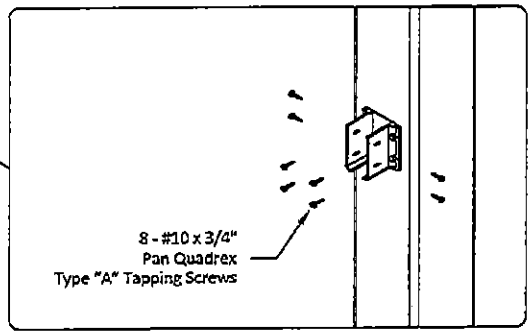

PVC MATERIAL SPECIFICATIONS

Specification	Value	ASTM Standard
Rate of Burning	0.0 mm/min	D-635
Smoke Density	32.5	D-2843
Self Ignition	10 C	D-1929

EMMA T. MELLINGER
LICENSE
No 50049
STATE OF
FLORIDA
PROFESSIONAL ENGINEER

2/27/15

CATEGORY 5
Engineering Services, Inc.
1600 S. Federal Highway. #207
Pompano Beach, FL 33062
(954) 784-6991: CA #25854

This Fence System Has Been Designed and Tested to Withstand a Basic Wind Speed of 115 mph (3-sec gust), in Compliance With the Provisions of the 2010 Florida Building Code, including the High Velocity Hurricane Zone.

VISION EXTRUSIONS LIMITED
201 Zenway Blvd.
Woodbridge, ON
Canada
L4H 3H9

This document and the information contained is owned by and proprietary to Vision Extrusions Limited. By receipt hereof, the holder agrees not to use the information, disclose it to any third parties nor reproduce this document without the prior written consent of Vision Extrusions Limited, and agrees to return this document forthwith upon request.

TOLERANCES
X.XX ± 0.015
X.XXX ± 0.010
X.XXXX ± 0.005
DO NOT SCALE DRAWING
ALL DIMENSIONS ARE IN INCHES U.O.S.

PRODUCT TYPE: **4X8 PVC ARCHED SPACED PICKET FENCE**

BRAND NAMES: AMAROSSA / VERANDA / UNIVERSAL CONSUMER PRODUCTS / DIMENSIONS / SEVERE WEATHER

SIZE:	"A1"	COLOUR:	NA	MATERIAL:	As specified	TOOL NO.:	DATE: 08/16/12
SHEET:	8 of 11	DRAWN BY:	RJO/EM	SCALE:	NA	PART NO.:	DWG NO.: MD511B

REVISIONS	
A2	Dimensions Added per Req.
B	Revise to 2010 FBC.

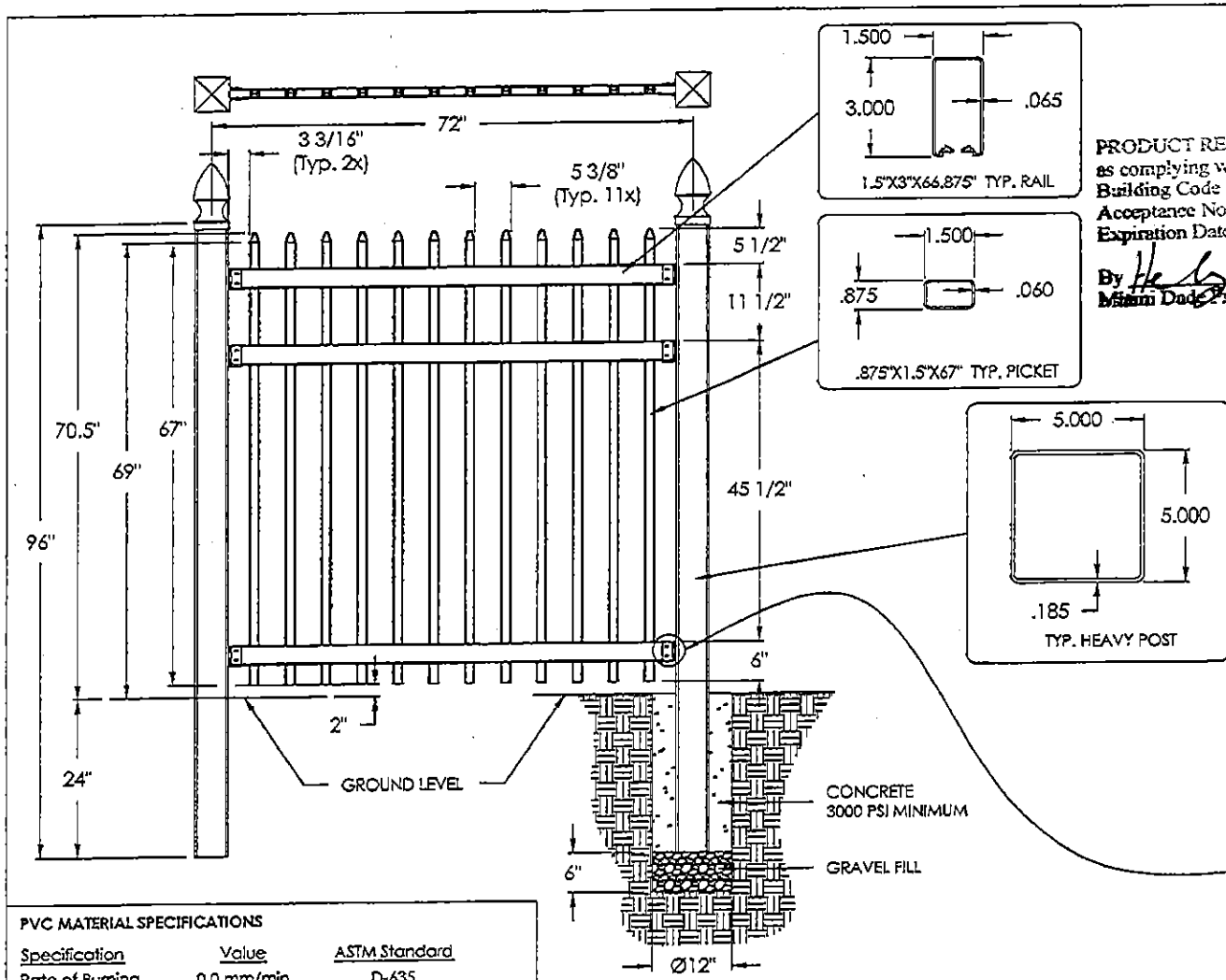

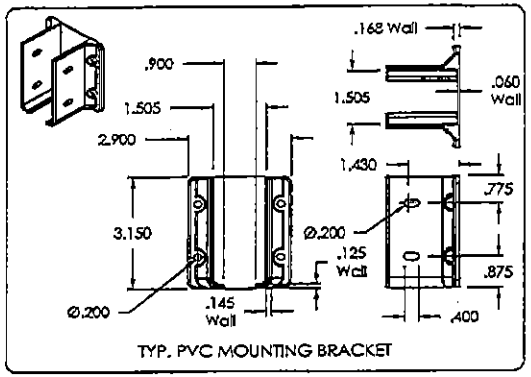

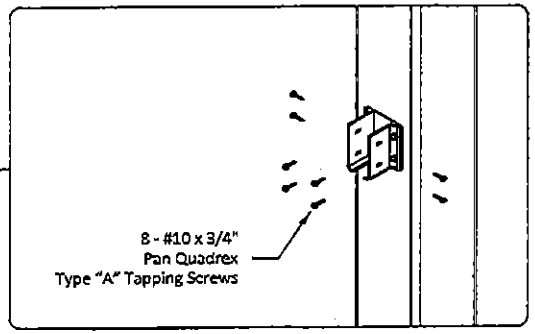

PRODUCT RENEWED
as complying with the Florida
Building Code
Acceptance No 15-0406.02
Expiration Date 05/12/2020
By
Miami Dade Product Control

PRODUCT REVISED
as complying with the Florida
Building Code
Acceptance No 13-0115.01
Expiration Date 05/12/2015
By
Miami Dade Product Control

PVC MATERIAL SPECIFICATIONS

Specification	Value	ASTM Standard
Rate of Burning	0.0 mm/min	D-635
Smoke Density	32.5	D-2843
Self Ignition	[illegible] C	D-1929

EMMA T. MELLINGER
LICENSE
No 50049
STATE OF FLORIDA
PROFESSIONAL ENGINEER

2/27/15

CATEGORY 5
Engineering Services, Inc.
1600 S. Federal Highway, #207
Pompano Beach, FL 33062
(954) 784-6991: CA #25854

This Fence System Has Been Designed and Tested to Withstand a Basic Wind Speed of 115 mph (3-sec gust), in Compliance With the Provisions of the 2010 Florida Building Code, Including the High Velocity Hurricane Zone.

VISION™ EXTRUSIONS LIMITED
201 Zenway Blvd.
Woodbridge, ON
Canada
L4H 3H9

This document and the information contained is owned by and proprietary to Vision Extrusions Limited. By receipt hereof, the holder agrees not to use the information, disclose it to any third parties nor reproduce this document without the prior written consent of Vision Extrusions Limited, and agrees to return this document forthwith upon request.

TOLERANCES
X.XX ± 0.015
X.XXX ± 0.010
X.XXXX ± 0.005
DO NOT SCALE DRAWING
ALL DIMENSIONS ARE IN INCHES U.O.S.

PRODUCT TYPE: **6X6 PVC SPACED-PICKET FENCE**
BRAND NAMES: AMAROSSA / VERANDA / UNIVERSAL CONSUMER PRODUCTS / DIMENSIONS / SEVERE WEATHER

SIZE: "A1"	COLOUR:	NA	MATERIAL:	As specified	TOOL NO.:	DATE:	08/16/12
SHEET: 9 of 11	DRAWN BY:	RJO/EM	SCALE:	NA	PART NO.:	DWG NO.:	MD511B

REVISIONS	
A2	Dimensions Added per Req.
B	Revise to 2010 FBC.

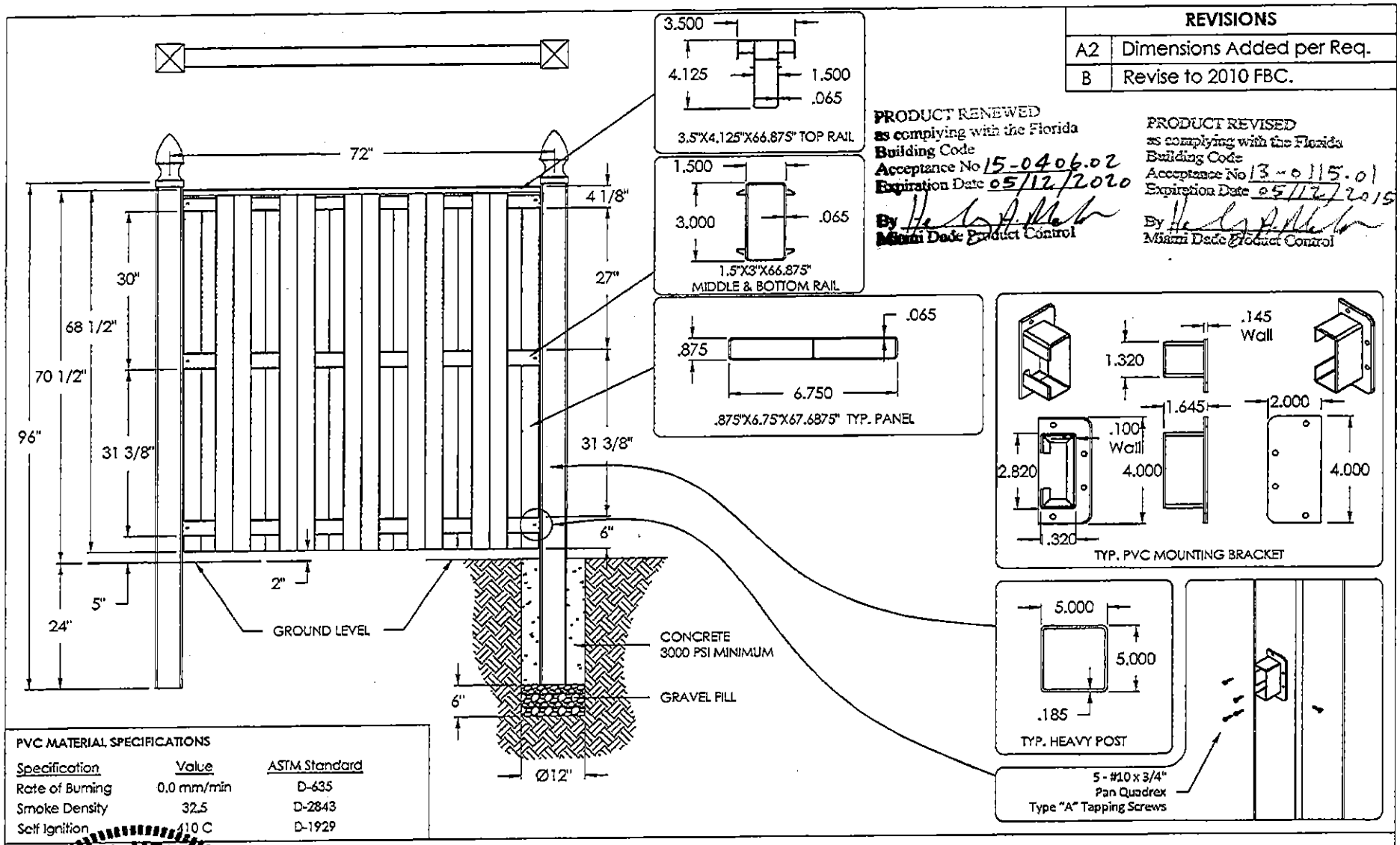

PRODUCT RENEWED
as complying with the Florida Building Code
Acceptance No 15-0406.02
Expiration Date 05/12/2020
By Miami Dade Product Control

PRODUCT REVISED
as complying with the Florida Building Code
Acceptance No 13-0115.01
Expiration Date 05/12/2015
By Miami Dade Product Control

PVC MATERIAL SPECIFICATIONS

Specification	Value	ASTM Standard
Rate of Burning	0.0 mm/min	D-635
Smoke Density	32.5	D-2843
Self Ignition	410 C	D-1929

EMMA T. MELLINGER
LICENSE
No 50049
STATE OF FLORIDA
PROFESSIONAL ENGINEER

2/27/15

CATEGORY 5
Engineering Services, Inc.
1600 S. Federal Highway, #207
Pompano Beach, FL 33062
(954) 784-6991 : CA #25854

This Fence System Has Been Designed and Tested to Withstand a Basic Wind Speed of 115 mph (3-sec gust), in Compliance With the Provisions of the 2010 Florida Building Code, Including the High Velocity Hurricane Zone.

VISION EXTRUSIONS LIMITED
201 Zenway Blvd.
Woodbridge, ON
Canada
L4H 3H9

This document and the information contained is owned by and proprietary to Vision Extrusions Limited. By receipt hereof, the holder agrees not to use the information, disclose it to any third parties nor reproduce this document without the prior written consent of Vision Extrusions Limited, and agrees to return this document forthwith upon request.

TOLERANCES
X.XX ± 0.015
X.XXX ± 0.010
X.XXXX ± 0.005
DO NOT SCALE DRAWING
ALL DIMENSIONS ARE IN INCHES U.O.S.

PRODUCT TYPE: **6X6 SHADOW BOX FENCE**

BRAND NAMES: AMAROSSA / VERANDA / UNIVERSAL CONSUMER PRODUCTS / DIMENSIONS / SEVERE WEATHER

SIZE:	"A1"	COLOUR:	NA	MATERIAL:	As specified	TOOL NO.:	DATE: 08/16/12
SHEET:	10 of 11	DRAWN BY:	RJO/EM	SCALE:	NA	PART NO.:	DWG NO.: MD511B

REVISIONS	
B1	Current w/ M-D revisions

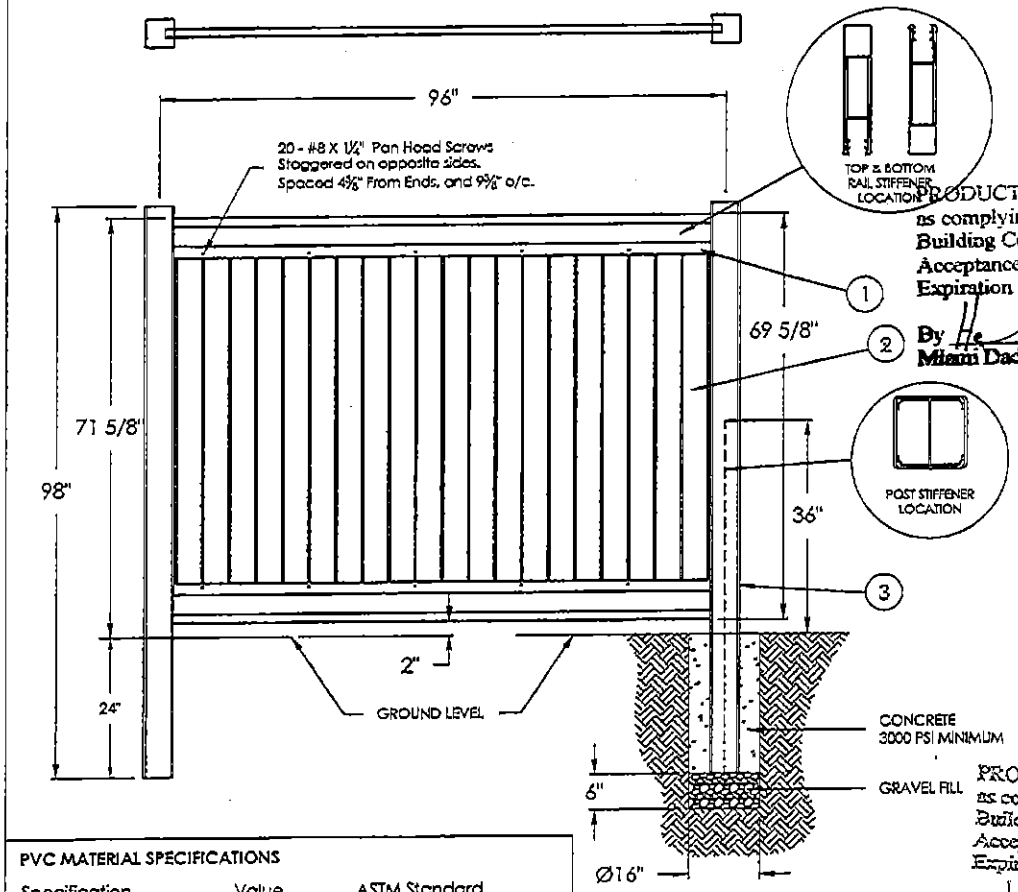

PRODUCT RENEWED
as complying with the Florida
Building Code
Acceptance No 15-0406.02
Expiration Date 05/12/2020
By
Miami Dade Product Control

PRODUCT REVISED
as complying with the Florida
Building Code
Acceptance No 13-0115.01
Expiration Date 05/12/2015
By
Miami Dade Product Control

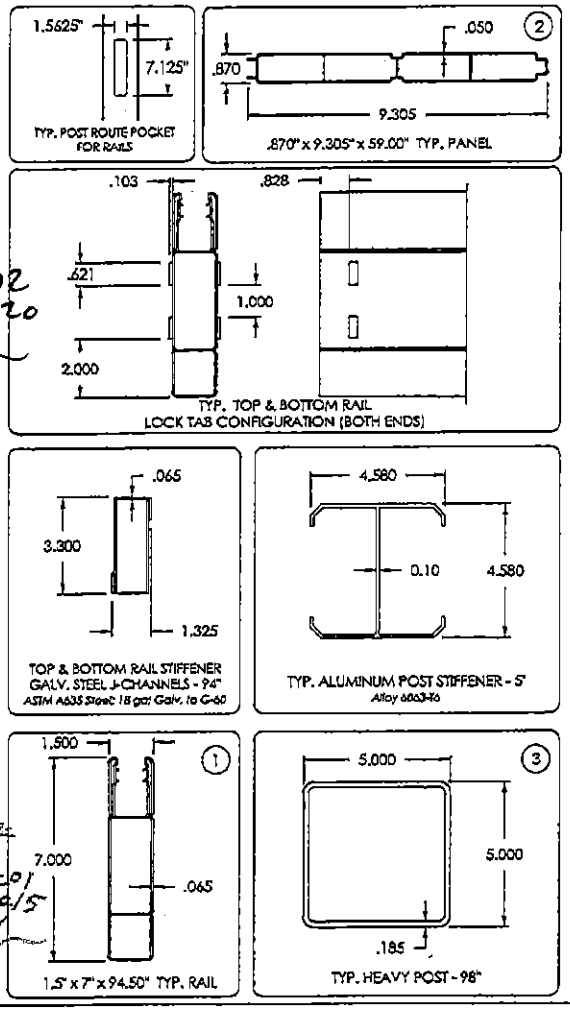

PVC MATERIAL SPECIFICATIONS		
Specification	Value	ASTM Standard
Rate of Burning	0.0 mm/min	D-635
Smoke Density	32.5	D-2843
Self Ignition	410 C	D-1929

EMMA T. MELLINGER
LICENSE
No 50049
STATE OF FLORIDA
PROFESSIONAL ENGINEER

2/27/15

CATEGORY 5
Engineering Services, Inc.
1600 S. Federal Highway. #207
Pompano Beach, FL 33062
(954) 784-6991: CA #25854

This Fence System Has Been Designed and Tested to Withstand a Basic Wind Speed of 115 mph (3-sec gust), In Compliance With the Provisions of the 2010 Florida Building Code, Including the High Velocity Hurricane Zone.

VISION™ EXTRUSIONS LIMITED
201 Zenway Blvd.
Woodbridge, ON
Canada
L4H 3H9

This document and the information contained is owned by and proprietary to Vision Extrusions Limited. By receipt hereof, the holder agrees not to use the information, disclose it to any third parties nor reproduce this document without the prior written consent of Vision Extrusions Limited, and agrees to return this document forthwith upon request.

TOLERANCES
X.XX ± 0.015
X.XXX ± 0.010
X.XXXX ± 0.005
DO NOT SCALE DRAWING
ALL DIMENSIONS ARE IN INCHES U.O.S.

PRODUCT TYPE: **6X8 PVC PRIVACY FENCE**
BRAND NAMES: AMAROSSA / VERANDA / UNIVERSAL CONSUMER PRODUCTS / DIMENSIONS / SEVERE WEATHER

SIZE: "A1"	COLOUR: NA	MATERIAL: As specified	TOOL NO.:	DATE: 08/16/12
SHEET: 11 of 11	DRAWN BY: RJO/EM	SCALE: NA	PART NO.:	DWG NO.: MD511B