MIAMI-DADE COUNTY

DEPARTMENT OF REGULATORY AND ECONOMIC RESOURCES (RER)
BOARD AND CODE ADMINISTRATION DIVISION

MIAMI–DADE COUNTY, FLORIDA
PRODUCT CONTROL SECTION
11805 SW 26 Street, Room 208
T (786) 315–2590 F (786) 315–2599
www.miamidade.gov/economy

NOTICE OF ACCEPTANCE (NOA)

PGT Industries, Inc.
1070 Technology Drive
North Venice, Fl. 34275

SCOPE:

This NOA is being issued under the applicable rules and regulations governing the use of construction materials. The documentation submitted has been reviewed and accepted by Miami–Dade County RER–Product Control Section to be used in Miami–Dade County and other areas where allowed by the Authority Having Jurisdiction (AHJ).

This NOA shall not be valid after the expiration date stated below. The Miami–Dade County Product Control Section (In Miami–Dade County) and/ or the AHJ (in areas other than Miami–Dade County) reserve the right to have this product or material tested for quality assurance purposes. If this product or material fails to perform in the accepted manner, the manufacturer will incur the expense of such testing and the AHJ may immediately revoke, modify, or suspend the use of such product or material within their jurisdiction. RER reserves the right to revoke this acceptance, if it is determined by Miami–Dade County Product Control Section that this product or material fails to meet the requirements of the applicable building code.

This product is approved as described herein, and has been designed to comply with the Florida Building Code, including the High Velocity Hurricane Zone.

DESCRIPTION: Series "FD-555" Outswing PVC French Door w/ & w/o Sidelite and Transom – L.M.I.

APPROVAL DOCUMENT: Drawing No. **MD-555.1**, titled "Vinyl French Door and SLT/ TR", sheets 1 through 12 of 12, dated 05/07/13 with revision **A** dated 03/18/15, prepared by manufacturer, signed and sealed by Anthony Lynn Miller, P.E., bearing the Miami-Dade County Product Control Section Revision stamp with the Notice of Acceptance number and expiration date by the Miami-Dade County Product Control Section.

MISSILE IMPACT RATING: Large and Small Missile Impact Resistant

LABELING: Each unit shall bear a permanent label with the manufacturer's name or logo, city, state, series, and following statement: "Miami–Dade County Product Control Approved", unless otherwise noted herein.

RENEWAL of this NOA shall be considered after a renewal application has been filed and there has been no change in the applicable building code negatively affecting the performance of this product.

TERMINATION of this NOA will occur after the expiration date or if there has been a revision or change in the materials, use, and/ or manufacture of the product or process. Misuse of this NOA as an endorsement of any product, for sales, advertising or any other purposes shall automatically terminate this NOA. Failure to comply with any section of this NOA shall be cause for termination and removal of NOA.

ADVERTISEMENT: The NOA number preceded by the words Miami–Dade County, Florida, and followed by the expiration date may be displayed in advertising literature. If any portion of the NOA is displayed, then it shall be done in its entirety.

INSPECTION: A copy of this entire NOA shall be provided to the user by the manufacturer or its distributors and shall be available for inspection at the job site at the request of the Building Official.

This NOA **revises NOA No. 13-0815.03** and consists of this page 1 and evidence pages E–1 and E–2, as well as approval document mentioned above.

The submitted documentation was reviewed by **Manuel Perez, P. E.**

MIAMI-DADE COUNTY APPROVED

7/2/15

PGT Industries, Inc.

NOTICE OF ACCEPTANCE: EVIDENCE SUBMITTED

A. DRAWINGS

1. Manufacturer's die drawings and sections.
   (Submitted under previous NOA No. 13-0815.03)
2. Drawing No. **MD-555.1**, titled "Vinyl French Door and SLT/TR", sheets 1 through 12 of 12, dated 05/07/13, with revision **A** dated 03/18/15, prepared by manufacturer, signed and sealed by Anthony Lynn Miller, P.E.

B. TESTS

1. Test reports on: 1) Air Infiltration Test, per FBC, TAS 202-94
   2) Uniform Static Air Pressure Test, Loading per FBC TAS 202-94
   3) Water Resistance Test, per FBC, TAS 202-94
   along with marked-up drawings and installation diagram of an outswing PVC French door, prepared by Fenestration Testing Laboratory, Inc., Test Report No. **FTL-7370**, dated 05/23/13, signed and sealed by Jorge A. Naya, Jr., P.E.
   (Submitted under previous NOA No. 13-0815.03)
2. Test reports on: 1) Uniform Static Air Pressure Test, Loading per FBC, TAS 202-94
   2) Large Missile Impact Test per FBC, TAS 201-94
   3) Cyclic Wind Pressure Loading per FBC, TAS 203-94
   along with marked-up drawings and installation diagram of an outswing Rigid PVC French door, prepared by Fenestration Testing Laboratory, Inc., Test Report No. **FTL-7371**, dated 05/25/13, signed and sealed by Jorge A. Naya, Jr., P.E.
   (Submitted under previous NOA No. 13-0815.03)
3. Test reports on: 1) Air Infiltration Test, per FBC, TAS 202-94
   2) Uniform Static Air Pressure Test, Loading per FBC TAS 202-94
   3) Water Resistance Test, per FBC, TAS 202-94
   along with marked-up drawings and installation diagram of a PVC fixed window, prepared by Fenestration Testing Laboratory, Inc., Test Report No. **FTL-7338**, dated 05/25/13, signed and sealed by Jorge A. Naya, Jr., P.E.
   (Submitted under previous NOA No. 13-0815.03)
4. Test reports on: 1) Uniform Static Air Pressure Test, Loading per FBC, TAS 202-94
   2) Large Missile Impact Test per FBC, TAS 201-94
   3) Cyclic Wind Pressure Loading per FBC, TAS 203-94
   along with marked-up drawings and installation diagram of a Rigid PVC fixed window, prepared by Fenestration Testing Laboratory, Inc., Test Report No. **FTL-7339**, dated 05/23/13, signed and sealed by Jorge A. Naya, Jr., P.E.
   (Submitted under previous NOA No. 13-0815.03)

Manuel Perez

Manuel Perez, P.E.
Product Control Examiner
NOA No. 15-0409.03
Expiration Date: January 23, 2019
Approval Date: July 02, 2015

NOTICE OF ACCEPTANCE: EVIDENCE SUBMITTED

C. CALCULATIONS

1. Anchor verification calculations and structural analysis, complying with **FBC 5th Edition (2014)**, dated 03/30/15, prepared by manufacturer, signed and sealed by Anthony Lynn Miller, P.E.
2. Glazing complies with **ASTM E1300-04/09**

D. QUALITY ASSURANCE

1. Miami-Dade Department of Regulatory and Economic Resources (RER).

E. MATERIAL CERTIFICATIONS

1. Notice of Acceptance No. **14-0916.10** issued to **Kuraray America, Inc.** for their **"Kuraray Butacite® PVB Glass Interlayer"** dated 04/25/15, expiring on 12/11/16.
2. Notice of Acceptance No. **14-0916.11** issued to **Kuraray America, Inc.** for their **"Kuraray SentryGlas® (Clear and White) Glass Interlayers"** dated 06/25/15, expiring on 07/04/18.
3. Notice of Acceptance No. **14-0820.11** issued to Vision Extrusions Limited for their **"White Rigid PVC Exterior Extrusions for Windows and Doors"**, dated 11/06/14, expiring on 09/30/19.
4. Notice of Acceptance No. **14-0820.12** issued to Vision Extrusions Limited for their **"Brown Coated (Painted or Laminated) White Rigid PVC Exterior Extrusions for Windows and Doors"**, dated 11/06/14, expiring on 09/30/19.
5. Notice of Acceptance No. **13-1121.01** issued to Vision Extrusions Limited for their series **"VE 2000 Tan 202 and lighter shades (Non–White) Rigid Cellular PVC Exterior Extrusions for Windows and Doors"** dated 01/23/14, expiring on 01/23/19.
6. Notice of Acceptance No. **13-1121.02** issued to **Vision Extrusions Limited** for their series **"White Rigid Cellular PVC Exterior Extrusions for Windows and Doors"** dated 01/23/14, expiring on 01/23/19.
7. Notice of Acceptance No. **11-0902.10** issued to Vision Extrusions Limited for their series **"VE 1000 Tan 202 (Non-White) Rigid PVC Exterior Extrusions for Windows and Doors"** dated 12/29/11, expiring on 12/29/16.
8. Quanex Part **Super Spacer Standard** complying with ASTM C518 Thermal Conductivity 0.881 BTU-in/ hr.-ft²-°F, ASTM F 1249 WVTR-Pass, ASTM D3985 Oxygen–Pass, ASTM E 2190 I.G. Durability-No Fog-Pass.
   (Submitted under previous NOA No. 13-0815.03)
9. Quanex Part **Duraseal** complying with ASTM C518 Thermal Conductivity 2.22 BTU-in/ hr.-ft²-°F, ASTM F 1249 WVTR-Pass, ASTM D 1434 Argon Permeance-Pass, ASTM E 2189 I.G. Durability-No Fog, ASTM E 546 Dew Point Development -20°F in 48 hrs. ***(Submitted under previous NOA No. 13-0815.03)***

Manuel Perez, P.E.
Product Control Examiner
NOA No. 15-0409.03
Expiration Date: January 23, 2019
Approval Date: July 02, 2015

NOTICE OF ACCEPTANCE: EVIDENCE SUBMITTED

E. MATERIAL CERTIFICATIONS (CONTINUED)

10. Vision Extrusions, Ltd. Parts complying with PVC-AAMA 303-13.
(Submitted under previous NOA No. 13-0815.03)

11. PVC-AAMA 303-13, Voluntary Specification for Rigid Polyvinyl Chloride (PVC) Exterior Profiles for Vision Extrusions, Ltd.-VEX-1 by AAMA Fenestration Exterior Profile Certification Program.
(Submitted under previous NOA No. 13-0815.03)

F. STATEMENTS

1. Statement letter of conformance to and of complying with **FBC 5th Edition (2014)**, dated 03/30/15, issued by manufacturer, signed and sealed by A. Lynn Miller, P.E.

2. Statement letter of no financial interest and of independent, issued by manufacture, dated 03/30/15, signed and sealed by Anthony Lynn Miller, P.E.

3. Laboratory compliance letter for Test Reports No. **FTL-7370**, **FTL-7371**, **FTL-7338** and **FTL-7339**, all issued by Fenestration Testing Laboratory, Inc., dated 05/23/13 and 05/25/13, all signed and sealed by Jorge A. Naya, Jr., P.E.
(Submitted under previous NOA No. 13-0815.03)

G. OTHERS

1. Notice of Acceptance No. **13-0815.03**, issued to PGT Industries, Inc. for their Series "FD-555 Vinyl" Outswing VE 2000 Tan 202 lighter shades (Non-White and White) Rigid Cellular PVC Door w/ Sidelites and w/ Transoms - L.M.I., approved on 01/23/14 and expiring on 01/23/19.

Manuel Perez

Manuel Perez, P.E.
Product Control Examiner
NOA No. 15-0409.03
Expiration Date: January 23, 2019
Approval Date: July 02, 2015

GENERAL NOTES: SERIES FD-5555, IMPACT-RESISTANT, VINYL, REINFORCED, OUTSWING FRENCH DOOR & SIDELITE/TRANSOM (SLT/TR)

DESIGN PRESSURE RATING	IMPACT RATING
VARIES, SEE SHEETS 4 & 5	RATED FOR LARGE & SMALL MISSILE IMPACT RESISTANCE

1) THIS PRODUCT HAS BEEN DESIGNED & TESTED TO COMPLY WITH THE REQUIREMENTS OF THE FLORIDA BUILDING CODE, INCLUDING THE HIGH VELOCITY HURRICANE ZONE (HVHZ).

2) SHUTTERS ARE NOT REQUIRED WHEN USED IN WIND-BORNE DEBRIS REGIONS.

3) FOR MASONRY APPLICATIONS IN MIAMI-DADE COUNTY, USE ONLY MIAMI-DADE COUNTY APPROVED MASONRY ANCHORS. MATERIALS USED FOR ANCHOR EVALUATIONS WERE SOUTHERN PINE, ASTM C90 CONCRETE MASONRY UNITS (CMU'S) OF NORMAL WEIGHT AND OF COMPRESSIVE STRENGTH OF MIN. 1.9 KSI) AND CONCRETE WITH MIN. KSI PER ANCHOR TYPE.

4) MASONRY ANCHORS MAY BE USED INTO WOOD AS PER TABLE 1, THIS SHEET. ALL WOOD BUCKS LESS THAN 1-1/2" THICK ARE TO BE CONSIDERED 1X INSTALLATIONS. 1X WOOD BUCKS ARE OPTIONAL IF UNIT IS INSTALLED DIRECTLY TO SUBSTRATE. WOOD BUCKS DEPICTED AS 2X ARE 1-1/2" THICK OR GREATER. 1X AND 2X BUCKS (WHEN USED) SHALL BE DESIGNED TO PROPERLY TRANSFER LOADS TO THE STRUCTURE. WOOD BUCK DESIGN AND INSTALLATION IS THE RESPONSIBILITY OF THE ENGINEER OR ARCHITECT OF RECORD.

5) IF SILL IS TIGHT TO SUBSTRATE, GROUT IS NOT REQUIRED. IF USED, NON-SHRINK, NON-METALLIC GROUT AT 3.4 KSI MIN. PER ASTM C1107, (DONE BY OTHERS). MAX. 1/4" SHIM SPACE FOR GROUT WHICH MUST FULLY SUPPORT THE ENTIRE LENGTH OF THE SILL THAT IS NOT TIGHT TO THE SUBSTRATE, AND TRANSFER SHEAR LOAD TO SUBSTRATE. IF SUBSTRATE IS WOOD, 30# FELT PAPER OR MASTIC IS REQUIRED BETWEEN THE GROUT AND WOOD SUBSTRATE, OR AS APPROVED BY THE AUTHORITY HAVING JURISDICTION, COMPLYING WITH THE FBC.

6) ANCHOR EMBEDMENT TO BASE MATERIAL SHALL BE BEYOND WALL DRESSING OR STUCCO. USE ANCHORS OF SUFFICIENT LENGTH TO ACHIEVE THE EMBEDMENT SHOWN ON TABLE 1, THIS SHEET. NARROW JOINT SEALANT IS USED ON ALL FOUR CORNERS OF THE FRAME. EXTERIOR INSTALLATION ANCHORS SHOULD BE SEALED. OVERALL SEALING/FLASHING STRATEGY FOR WATER RESISTANCE OF INSTALLATION SHALL BE DONE BY OTHERS AND IS BEYOND THE SCOPE OF THESE INSTRUCTIONS.

7) MAX. 1/4" SHIMS ARE REQUIRED AT EACH ANCHOR LOCATION WHERE THE PRODUCT IS NOT FLUSH TO THE SUBSTRATE. USE SHIMS CAPABLE OF TRANSFERRING APPLIED LOADS. WOOD BUCKS, BY OTHERS, MUST BE SUFFICIENTLY ANCHORED TO RESIST LOADS IMPOSED ON THEM BY THE DOOR, SIDELITE OR TRANSOM.

8) DESIGN PRESSURES:
A. NEGATIVE DESIGN LOADS BASED ON STRUCTURAL TEST PRESSURE, FRAME ANALYSIS AND GLASS PER ASTM E1300.
B. POSITIVE DESIGN LOADS BASED ON WATER TEST PRESSURE, STRUCTURAL TEST PRESSURE, FRAME ANALYSIS AND GLASS PER ASTM E1300.

9) THE ANCHORAGE METHODS SHOWN HAVE BEEN DESIGNED TO RESIST THE WINDLOADS CORRESPONDING TO THE REQUIRED DESIGN PRESSURE. THE 33-1/3% STRESS INCREASE HAS NOT BEEN USED IN THE DESIGN OF THIS PRODUCT. THE 1.6 LOAD DURATION FACTOR WAS USED FOR THE EVALUATION OF ANCHORS INTO WOOD. ANCHORS THAT COME INTO CONTACT WITH OTHER DISSIMILAR MATERIALS SHALL MEET THE REQUIREMENTS OF THE FLORIDA BUILDING CODE (INCLUDING ADOPTED STANDARDS) FOR CORROSION RESISTANCE.

10) ALL RIGID PVC AND RIGID CELLULAR CPVC MANUFACTURED BY VISION EXTRUSIONS, LTD. HAS BEEN TESTED TO COMPLY WITH THE FLORIDA BUILDING CODE FOR PLASTICS.

11) SIZES MUST BE VERIFIED FOR COMPLIANCE WITH EGRESS REQUIREMENTS PER THE FLORIDA BUILDING CODE.

12) REFERENCES:
TEST REPORTS: FTL-7339 & 7371
NOA'S: ELCO ULTRACON NOA; ELCO CRETEFLEX NOA; ELCO AGGRE-GATOR NOA; VISION EXTRUSIONS, LTD. WHITE RIGID, VE 1000 TAN 202 (NON-WHITE) RIGID & BROWN-COATED (PAINTED OR LAMINATED) RIGID PVC NOA'S, VISION EXTRUSIONS LTD. WHITE & VE 2000 TAN (NON-WHITE) RIGID CELLULAR PVC NOA'S, ANSI/AF&PA NDS FOR WOOD CONSTRUCTION AND ADM ALUMINUM DESIGN MANUAL.

13) THE 5555 SERIES IS ALSO KNOWN AS THE 555 SERIES.

14) INTERLAYERS MAY BE MANUFACTURED BY E.I. DUPONT DENEMOURS & CO., INC. OR KURARAY AMERICA, INC.

TABLE 1:

Group	Anchor	Substrate	Min. Edge Distance	Min. Embedment
A	3/16" Elco Ultracon	Ungrouted CMU, (ASTM C-90)	1"	1-1/4"
		Ungrouted CMU, (ASTM C-90)	2-1/2"	1-1/4"
B	#10 Steel SMS (G5) #10 410 S.S. SMS #10 18-8 S.S. SMS	P.T. Southern Pine (SG=0.55)	1/2"	1-3/8"
		Aluminum, 6063-T5*	5/16"	0.063"
		Steel, A36*	5/16"	0.063"
		Steel Stud, A653 Gr. 33*	5/16"	0.063"
	3/16" Elco Ultracon	P.T. Southern Pine (SG=0.55)	1/2"	1-3/8"
		Grouted CMU, (ASTM C-90)	2-1/2"	2-1/4"
		Concrete (min. 2.85 ksi)	1"	1-3/8"
	1/4" Elco Ultracon	Ungrouted CMU, (ASTM C-90)	2-1/2"	1-1/4"
C	#12 Steel SMS (G5) #12 410 S.S. SMS #12 18-8 S.S. SMS	P.T. Southern Pine (SG=0.55)	9/16"	1-3/8"
		Aluminum, 6063-T5*	3/8"	0.071"
		Steel, A36*	3/8"	0.071"
		Steel Stud, A653 Gr. 33*	3/8"	0.071" (14 Ga)
	1/4" Elco Ultracon	P.T. Southern Pine (SG=0.55)	1"	1-3/8"
		Grouted CMU, (ASTM C-90)	2-1/2"	1-3/4"
		Concrete (min. 2.85 ksi)	1"	1-3/8"
	1/4" Elco 410 S.S. CreteFlex	Concrete (min. 3.35 ksi)	1"	1-3/4"
		Ungrouted CMU, (ASTM C-90)	2-1/2"	1-1/4"
	1/4" Elco 18-8 S.S. Aggre-Gator	P.T. Southern Pine (SG=0.55)	1"	1-3/8"
		Concrete (min. 3.27 ksi)	1-1/2"	1-3/8"
		Ungrouted CMU, (ASTM C-90)	4"	1-1/4"
D	1/4" Elco Ultracon	Concrete (min. 2.85 ksi)	2-1/2"	1-3/8"
	1/4" Elco410 S.S. CreteFlex	Concrete (min. 3.35 ksi)	2-1/2"	1-3/4"

* MIN. OF 3 THREADS BEYOND THE METAL SUBSTRATE.

TABLE 2:

Type #	Description	Where Used:
1	1-3/16" Lami. IG (1/8" T - 11/16" Air - 1/8" An - .090" PVB - 1/8" An)	Door
2	1-3/16" Lami. IG (3/16" T - 5/8" Air - 1/8" An - .090" PVB - 1/8" An)	
3	1-3/16" Lami. IG (1/8" T - 9/16" Air - 3/16" An - .090" SG - 3/16" An)	Sidelite & Transom (SLT/TR)
4	1-3/16" Lami. IG (3/16" T - 1/2" Air - 3/16" An - .090" SG - 3/16" An)	
5	1-3/16" Lami. IG (1/8" T - 9/16" Air - 3/16" An - .090" PVB - 3/16" An)	
6	1-3/16" Lami. IG (3/16" T - 1/2" Air - 3/16" An - .090" PVB - 3/16" An)	

PVB = POLYVINYL BUTACITE
SG = SENTRYGLAS® INTERLAYER
SEE TABLE 11 FOR SPACER INFORMATION

GUIDE TO SHEETS:

GENERAL NOTES..... 1
ELEVATIONS..... 2
GLAZING DETAILS..... 3
DESIGN PRESSURES..... 4-5
SIDELITE/TRANSOM ANCHORS.... 4-6
INSTALLATION..... 7-9
EXTRUSION PROFILES..... 10
PARTS LIST..... 11-12
CORNER DETAILS..... 11
HARDWARE DETAILS..... 12

PRODUCT REVISED
as complying with the Florida Building Code
Acceptance No. 15-0409.03
Expiration Date 07/23/2019
By Manuel Perez
Miami-Dade Product Control

Rev A	A) UPDATED ANCHOR TABLE, CHANGED SERIES # - JR - 03/18/15
Rev B	
Rev C	

PGT®
CERT. OF AUTH. #29296
1070 TECHNOLOGY DRIVE
N. VENICE, FL 34275
P.O. BOX 1529
NOKOMIS, FL 34274
(941)-480-1600

Title	Desc.	Series	Scale	Sheet	DWG No.	Drawn By	Date	Rev.
VINYL FRENCH DOOR AND SLT/TR	GENERAL NOTES	FD-5555	NTS	1 OF 12	MD-555.1	J ROSOWSKI	5/7/13	A

ANTHONY LYNN MILLER
LICENSE
No. 58705
6/16/15
STATE OF FLORIDA
PROFESSIONAL ENGINEER

A. LYNN MILLER, P.E.
P.E.# 58705

EXAMPLE CONFIGURATIONS

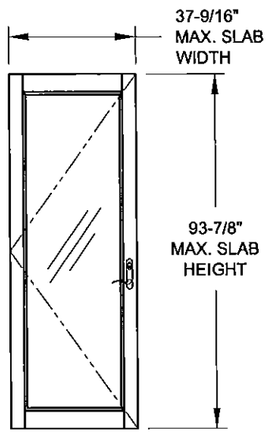

TYP. DOOR SLAB

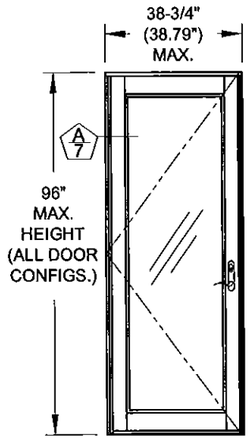

X

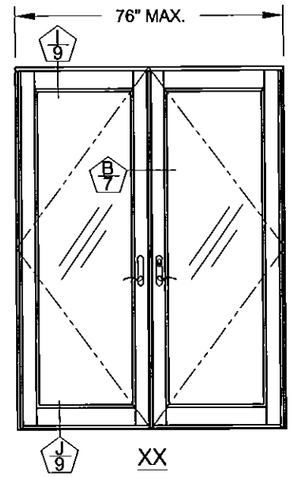

XX

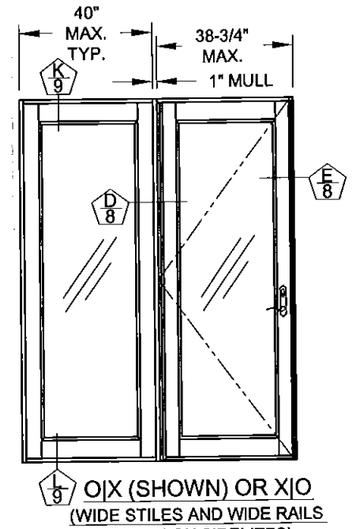

O|X (SHOWN) OR X|O
(WIDE STILES AND WIDE RAILS SHOWN ON SIDELITES)

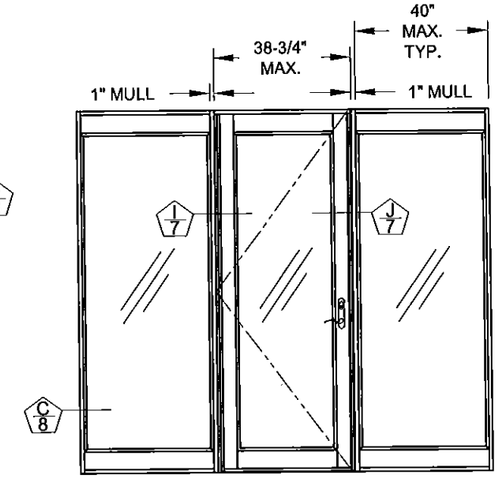

O|X|O
(NARROW STILES AND WIDE RAILS SHOWN ON SIDELITES)

DETAIL
SHEET #

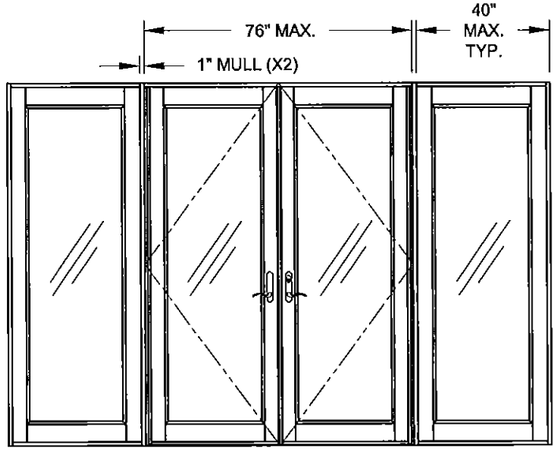

O|XX|O
(WIDE STILES AND WIDE RAILS SHOWN ON SIDELITES)

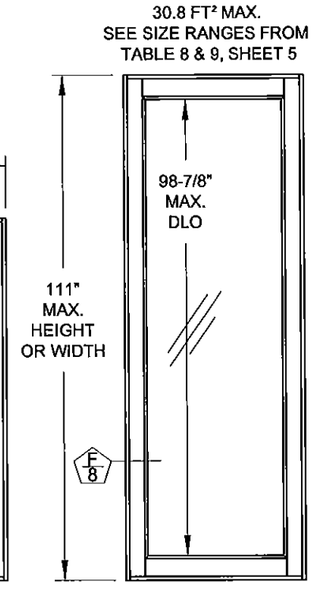

SINGLE O
(WIDE STILES AND WIDE RAILS SHOWN ON SIDELITES)

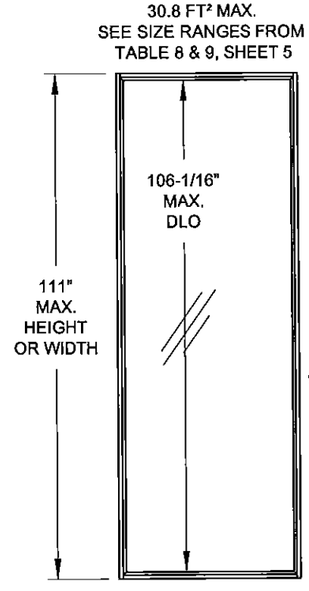

SINGLE O
(NARROW STILES AND NARROW RAILS SHOWN ON SIDELITES)

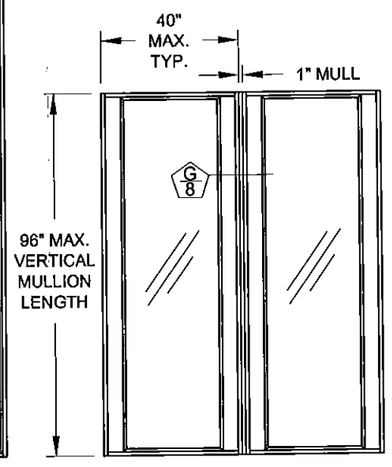

O|O (ADDITIONAL MULLED LITES ALLOWED)
(WIDE STILES AND NARROW RAILS SHOWN ON SIDELITES)

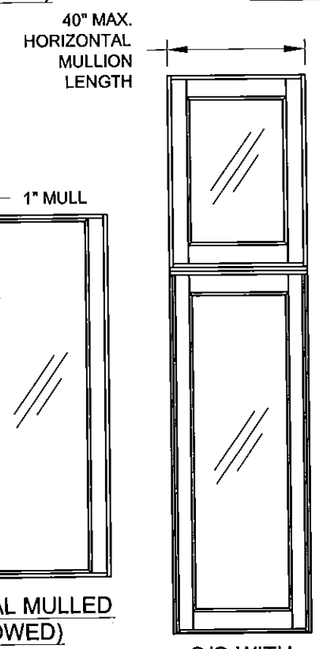

O/O WITH HORIZONTAL MULLION
(WIDE STILES AND WIDE RAILS SHOWN ON SIDELITE & TRANSOM)

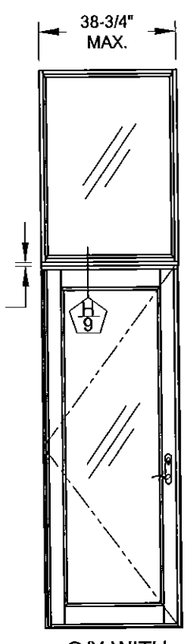

O/X WITH HORIZONTAL MULLION
(NARROW STILES AND NARROW RAILS SHOWN ON TRANSOM)

NOTES:
1) SINGLE DOORS MAY BE LEFT OR RIGHT-HANDED.
2) MULLIONS SHOWN ARE STANDARD 1" FRENCH DOOR MULLIONS PER THIS NOA.
3) MULLED CONFIGURATIONS NOT SHOWN MAY BE POSSIBLE USING OTHER MULLION TYPES, SEE SEPARATE NOA.
4) FRENCH DOOR MULLION IS LIMITED TO 96" IN VERTICAL APPLICATIONS AND 40" IN HORIZONTAL APPLICATIONS.
5) NARROW OR WIDE STILES AND RAILS MAY BE MIXED WITHIN THE SAME SLT/TR OR MULLED ASSEMBLY.
6) ADDITIONAL CONFIGURATIONS USING THE 1" FRENCH DOOR MULLION ARE POSSIBLE. USE THE ABOVE DRAWINGS AS A REFERENCE FOR SIZE LIMITATIONS.

PRODUCT REVISED
as complying with the Florida Building Code
Acceptance No 15-0409.03
Expiration Date 01/23/2019
By Manuel Perez
Miami-Dade Product Control

Rev A	A) NO CHANGES THIS SHEET - JR - 03/18/15
Rev B	
Rev C	

1070 TECHNOLOGY DRIVE
N. VENICE, FL 34275
P.O. BOX 1529
NOKOMIS, FL 34274
(941)-480-1600
PGT®
CERT. OF AUTH. #29296

Series	FD-5555
Title	VINYL FRENCH DOOR AND SLT/TR
Desc.	EXAMPLE CONFIGURATIONS
Scale	NTS
Sheet	2 OF 12
DWG No.	MD-555.1
Rev.	A
Drawn By	J ROSOWSKI
Date	5/7/13

ANTHONY LYNN MILLER
LICENSE
No. 58705
STATE OF FLORIDA
PROFESSIONAL ENGINEER
6/16/15

A. LYNN MILLER, P.E.
P.E.# 58705

DOOR GLAZING DETAILS

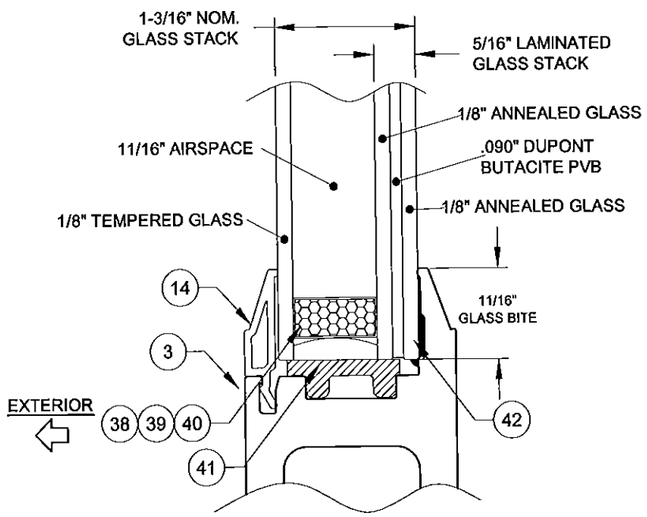

GLASS TYPE 1

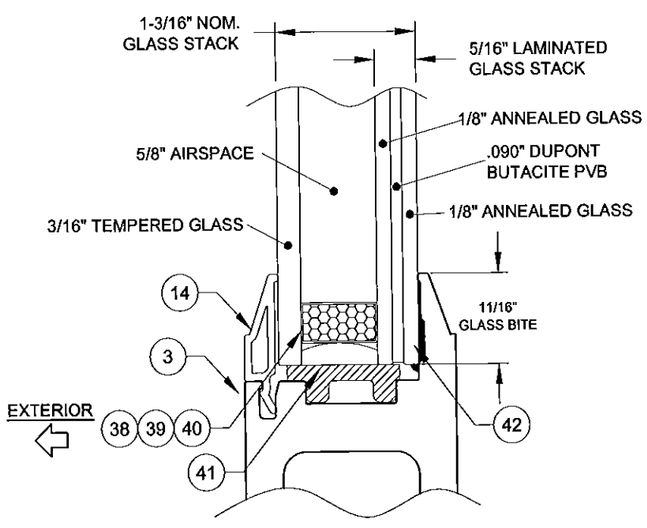

GLASS TYPE 2

PVB = POLYVINYL BUTACITE
SG = SENTRYGLAS® INTERLAYER

SIDELITE & TRANSOM GLAZING DETAILS

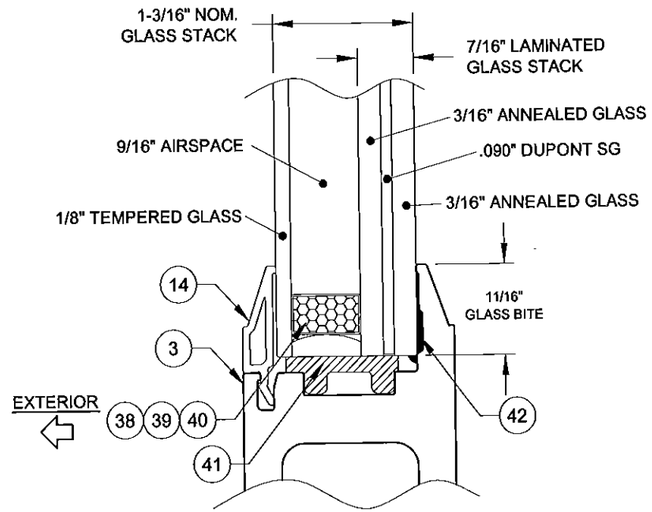

GLASS TYPE 3
TYP. WIDE FRAME GLAZING DETAIL, NARROW FRAME SIMILAR

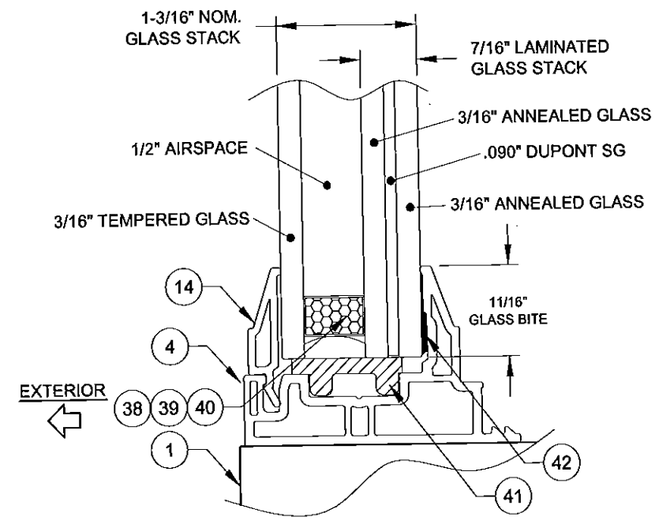

GLASS TYPE 4
TYP. NARROW FRAME GLAZING DETAIL, WIDE FRAME SIMILAR.

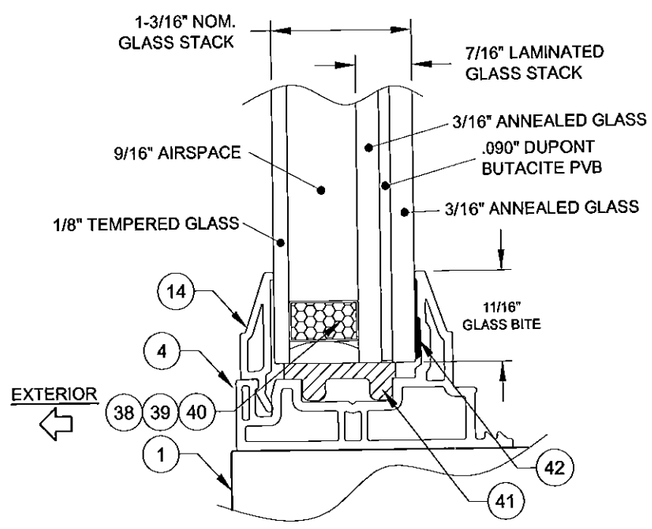

GLASS TYPE 5
TYP. NARROW FRAME GLAZING DETAIL, WIDE FRAME SIMILAR.

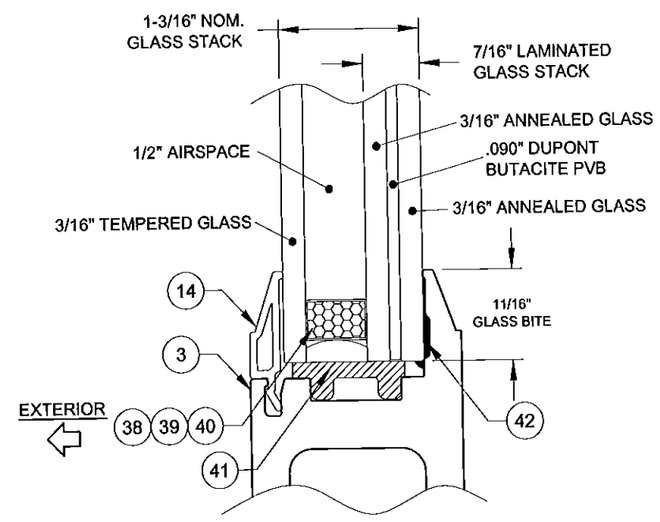

GLASS TYPE 6
TYP. WIDE FRAME GLAZING DETAIL, NARROW FRAME SIMILAR

PRODUCT REVISED
as complying with the Florida Building Code
Acceptance No. 15-0409.03
Expiration Date 01/23/2019
By Manuel Perez
Miami-Dade Product Control

Rev. A	A) NO CHANGES THIS SHEET - JR - 03/18/15
Rev. B	
Rev. C	

PGT®
CERT. OF AUTH. #29296
1070 TECHNOLOGY DRIVE
N. VENICE, FL 34275
P.O. BOX 1529
NOKOMIS, FL 34274
(941)-480-1600

Series	FD-5555
Scale	NTS
Sheet	3 OF 12
DWG No.	MD-555.1
Rev.	A
Drawn By	J ROSOWSKI
Date	5/7/13
Desc.	GLAZING DETAILS
Title	VINYL FRENCH DOOR AND SLT/TR

ANTHONY LYNN MILLER
LICENSE
No. 58705
6/16/15
STATE OF FLORIDA
PROFESSIONAL ENGINEER

A. LYNN MILLER, P.E.
P.E.# 58705

SINGLE DOOR INSTALLATION (X)

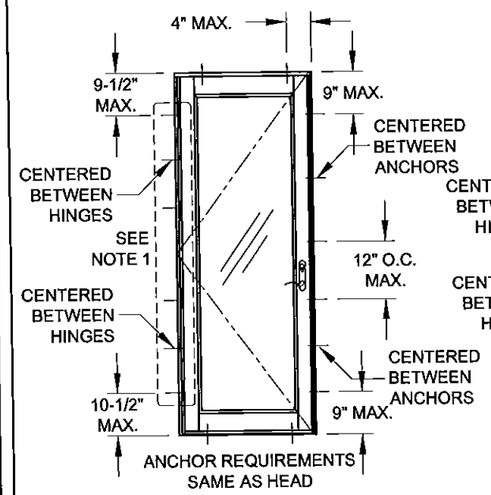

X

DOUBLE DOOR INSTALLATION (XX)

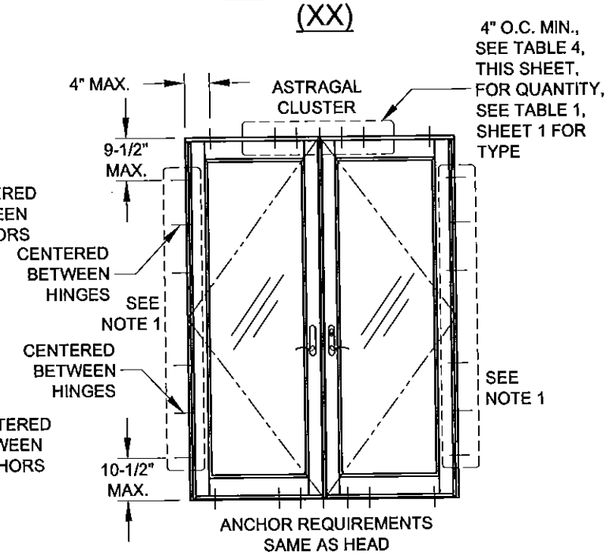

XX, (USING ASTRAGAL)

TABLE 3:

DOOR DESIGN PRESSURE	
+/-50.0 PSF	Glass Type 1
+/-70.0 PSF	Glass Type 2

TABLE 4:

XX Door: Astragal Cluster Anchors Required @ Head & Sill								
	Door Width (in)							
	48	60		72		76		
Door Height (in)	Anchor Group B-D	Anchor Group B	Anchor Group C&D	Anchor Group B	Anchor Group C&D	Anchor Group B	Anchor Group C	Anchor Group D
80	4	4	4	5	4	5	4	4
96	4	5	4	6	4	6	5	4

SIDELITE-TO-SIDELITE MULLION INSTALLATION (O|O, O|O|O, ETC.)

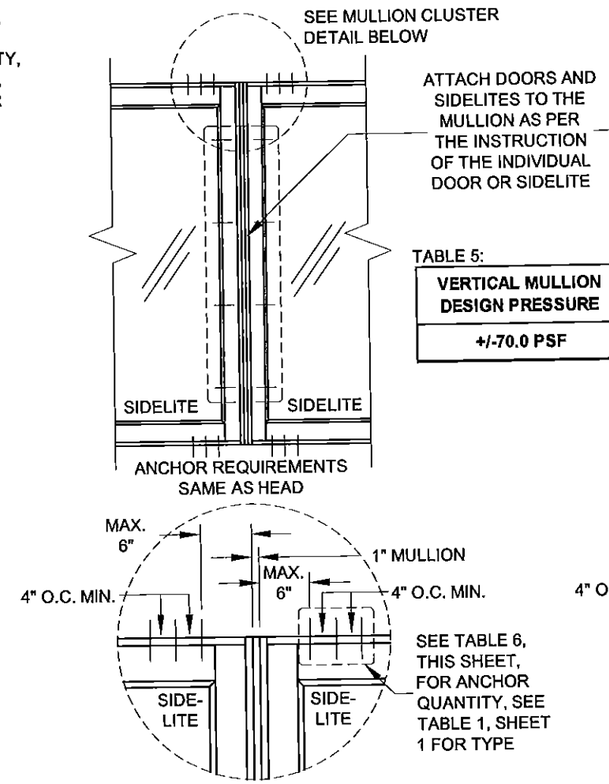

TABLE 5:

VERTICAL MULLION DESIGN PRESSURE
+/-70.0 PSF

SIDELITE-TO-DOOR MULLION INSTALLATION (X|O, O|X, X|X, O|X|O, X|O|X, O|XX|O, ETC)

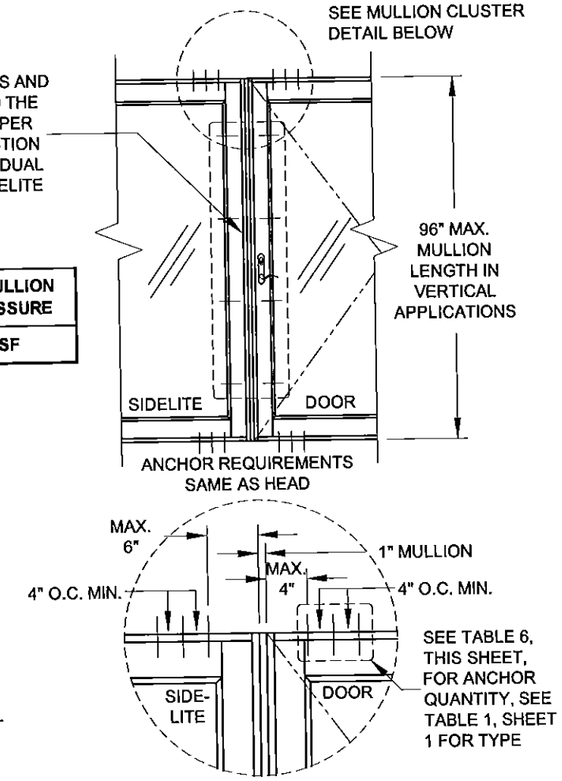

TABLE 6:

Anchors Required for a Vertical Mullion (each mullion end)													
		Door or Sidelite/Transom Width (in)											
		12	24		32			38-3/4			40		
	Mullion Height (in)	Anchor Group B-D	Anchor Group B&C	Anchor Group D	Anchor Group B	Anchor Group C	Anchor Group D	Anchor Group B	Anchor Group C	Anchor Group D	Anchor Group B	Anchor Group C	Anchor Group D
Door	80	N/A	2	1	2	2	1	3	2	1	N/A	N/A	N/A
SLT/TR		1	2	1	2	2	1	3	2	1	3	2	1
Door	96	N/A	2	1	3	2	1	3	3	2	N/A	N/A	N/A
SLT/TR		1	2	1	3	2	1	3	3	2	3	3	2

FOR "O|XX|O" AND SIMILAR CONFIGURATIONS CONTAINING A DOUBLE DOOR (XX), USE ONLY HALF OF THE FRAME WIDTH OF THE DOUBLE DOOR WHEN USING THIS TABLE.

TRANSOM-TO-DOOR (X/O) OR TRANSOM-TO-SIDELITE (O/O) MULLION ATTACHMENT& INSTALLATION

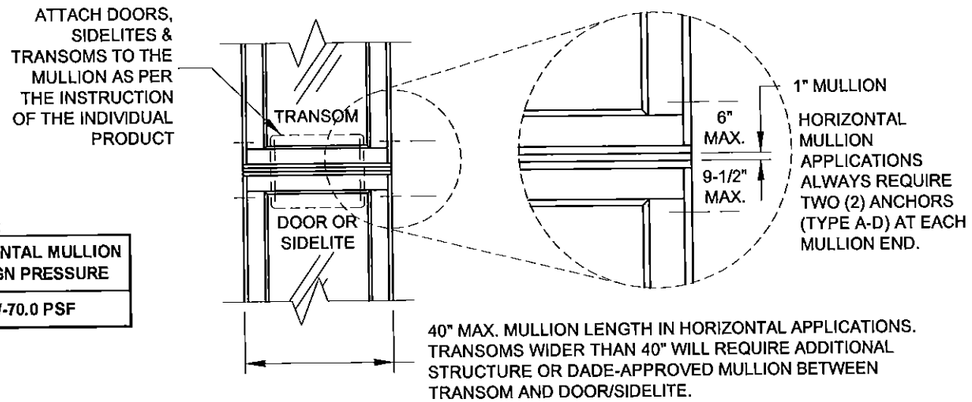

TABLE 7:

HORIZONTAL MULLION DESIGN PRESSURE
+/-70.0 PSF

INSTRUCTIONS:

1) DOOR HINGE JAMBS OF ALL HEIGHTS TO ALWAYS BE ANCHORED WITH SIX ANCHORS. SEE TABLE 1, SHEET 1, FOR ALL APPROVED ANCHORS. FOUR OF THE SIX ANCHORS MUST BE INSTALLED THROUGH THE HINGES, ONE AT EACH HINGE LOCATION (RECOMMENDED #10 FLATHEAD SMS OR 3/16" FLATHEAD ULTRACON FOR EACH HINGE ANCHOR).
2) FOR A MULLED UNIT, DETERMINE THE DESIGN PRESSURE OF EACH COMPONENT IN THAT CONFIGURATION. FOR EXAMPLE, ON AN "X|O" CONFIGURATION, THE DP FOR THE DOOR, THE MULLION AND THE SIDELITE MUST EACH BE DETERMINED. THE LOWEST DP APPLIES TO THE ENTIRE ASSEMBLY.

NOTES:

1) SINGLE DOOR MAY BE LEFT OR RIGHT-HANDED.
2) MULLIONS SHOWN ARE STANDARD 1" FRENCH DOOR MULLIONS.
3) MULLED CONFIGURATIONS NOT SHOWN MAY BE POSSIBLE USING OTHER MULLION TYPES, SEE SEPARATE NOA. THE LOWEST COMPONENT DP IS TO BE THE OVERALL ASSEMBLY DP.
4) FRENCH DOOR MULLION IS LIMITED TO 96" IN VERTICAL APPLICATIONS AND 40" IN HORIZONTAL APPLICATIONS.
5) NARROW OR WIDE STILES AND RAILS MAY BE MIXED WITHIN THE SAME SIDELITE/TRANSOM OR MULLED ASSEMBLY.
6) FOR SIZES NOT SHOWN, ROUND UP TO THE NEXT AVAILABLE SHORT OR LONG DIMENSION.

PRODUCT REVISED
as complying with the Florida Building Code
Acceptance No. 15-0409.03
Expiration Date 01/23/2019
By Manuel Perez
Miami-Dade Product Control

Rev A	A) NO CHANGES THIS SHEET - JR - 03/18/15
Rev B	
Rev C	

1070 TECHNOLOGY DRIVE
N. VENICE, FL 34275
P.O. BOX 1529
NOKOMIS, FL 34274
(941)-480-1600
CERT. OF AUTH. #29296

Series	MD-555.1
Rev.	A
Title	VINYL FRENCH DOOR AND SLT/TR
Desc.	DESIGN PRESSURE 1
Drawn By	J ROSOWSKI
Date	5/7/13
DWG No.	4 OF 12
Sheet	NTS
Scale	FD-5555

ANTHONY LYNN MILLER
LICENSE
No. 58705
STATE OF FLORIDA
PROFESSIONAL ENGINEER
6/16/15

A. LYNN MILLER, P.E.
P.E.# 58705

TABLE 8:

Short Side (in)	Sidelite/Transom Design Pressure (+/-, psf) for Glass Types 3 & 4 — Long Side (in)															
	63-3/16	66-5/8	68	70	72	76	78	82	84	88	92	96	98	104	108	111
24	+/-70	+/-70	+/-70	+/-70	+/-70	+/-70	+/-70	+/-70	+/-70	+/-70	+/-70	+/-70	+/-70	+/-70	+/-70	+/-70
28	+/-70	+/-70	+/-70	+/-70	+/-70	+/-70	+/-70	+/-70	+/-70	+/-70	+/-70	+/-70	+/-70	+/-70	+/-70	+/-70
32	+/-70	+/-70	+/-70	+/-70	+/-70	+/-70	+/-70	+/-70	+/-70	+/-70	+/-70	+/-70	+/-70	+/-70	+/-70	+/-70
36	+/-70	+/-70	+/-70	+/-70	+/-70	+/-70	+/-70	+/-70	+/-70	+/-70	+/-70	+/-70	+/-70	+/-70	+/-70	+/-70
38-3/4	+/-70	+/-70	+/-70	+/-70	+/-70	+/-70	+/-70	+/-70	+/-70	+/-70	+/-70	+/-70	+/-70	+/-70	+/-70	+/-70
40	+/-70	+/-70	+/-70	+/-70	+/-70	+/-70	+/-70	+/-70	+/-70	+/-70	+/-70	+/-70	+/-70	+/-70	+/-70	+/-70
42	+/-70	+/-70	+/-70	+/-70	+/-70	+/-70	+/-70	+/-70	+/-70	+/-70	+/-70	+/-70	+/-69.6	+/-68.5		
44	+/-70	+/-70	+/-70	+/-70	+/-70	+/-70	+/-70	+/-70	+/-70	+/-69.6	+/-68.6	+/-67.7	+/-67.3			
46	+/-70	+/-70	+/-70	+/-70	+/-70	+/-70	+/-70	+/-69.4	+/-68.7	+/-67.6	+/-66.5	+/-65.6				
48	+/-70	+/-70	+/-70	+/-70	+/-70	+/-69.9	+/-69.1	+/-67.6	+/-67	+/-65.8	+/-64.7					
50	+/-70	+/-70	+/-70	+/-70	+/-70	+/-68.4	+/-67.6	+/-66	+/-65.4	+/-64.1						
52	+/-70	+/-70	+/-70	+/-70	+/-69.1	+/-67.1	+/-66.2	+/-64.6	+/-63.9							
54	+/-70	+/-70	+/-70	+/-69.2	+/-68	+/-65.9	+/-65	+/-63.4								
56	+/-70	+/-70	+/-69.7	+/-68.3	+/-67.1	+/-64.9	+/-63.9									
58	+/-70	+/-70	+/-69	+/-67.6	+/-66.3	+/-64										
60	+/-70	+/-69.6	+/-68.5	+/-67	+/-65.6											
62	+/-70	+/-69.2	+/-68	+/-66.5												
63-3/16	+/-70	+/-69.1	+/-67.9	+/-66.2												
66-5/8	+/-69.1	+/-68.9														

SIDELITE/TRANSOM INSTALLATION (O)

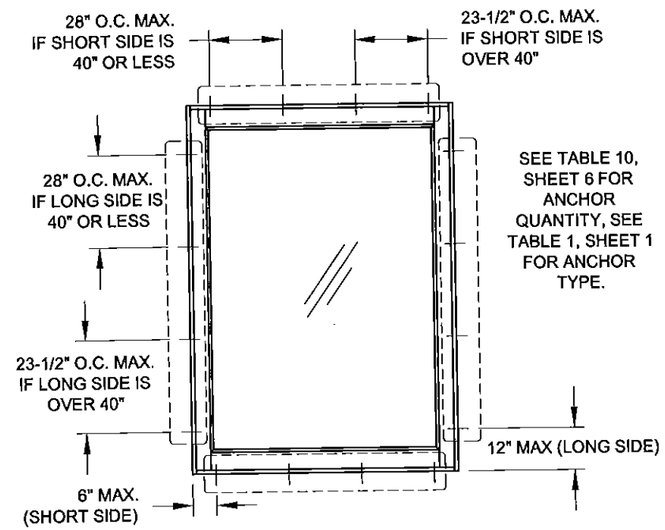

(WIDE STILES AND WIDE RAILS SHOWN ON SIDELITES)

TABLE 9:

Short Side (in)	Sidelite/Transom Design Pressure, psf for Glass Types 5 & 6 — Long Side (in)															
	63-3/16	66-5/8	68	70	72	76	78	82	84	88	92	96	98	104	108	111
24	+/-70	+/-70	+/-70	+/-70	+/-70	+/-70	+/-70	+/-70	+/-70	+/-70	+/-70	+/-70	+/-70	+/-70	+/-70	+/-70
28	+/-70	+/-70	+/-70	+/-70	+/-70	+/-70	+/-70	+/-70	+/-70	+/-70	+/-70	+/-70	+/-70	+/-70	+/-70	+/-70
32	+/-70	+/-70	+/-70	+/-70	+/-70	+/-70	+/-70	+/-70	+/-70	+/-70	+/-70	+/-70	+/-70	+/-70	+/-70	+/-70
36	+/-70	+/-70	+/-70	+/-70	+/-70	+/-70	+/-70	+/-70	+/-70	+/-70	+/-70	+/-70	+/-70	+/-70	+/-70	+/-70
38-3/4	+/-70	+/-70	+/-70	+/-70	+/-70	+/-70	+/-70	+/-70	+/-70	+/-69.9	+/-69	+/-68.3	+/-67.9			
40	+/-70	+/-70	+/-70	+/-70	+/-70	+/-70	+/-70	+/-69.8	+/-69.3	+/-68.3	+/-67.4	+/-66.7	+/-66.3			
42	+/-70	+/-70	+/-70	+/-70	+/-70	+/-69.5	+/-68.8	+/-67.6	+/-67	+/-66	+/-65.1					
44	+/-70	+/-70	+/-70	+/-70	+/-69.1	+/-67.5	+/-66.8	+/-65.6	+/-65	+/-64						
46	+/-70	+/-70	+/-69.4	+/-68.4	+/-67.4	+/-65.8	+/-65.1	+/-63.8	+/-63.2							
48	+/-70	+/-68.8	+/-68	+/-66.9	+/-66	+/-64.3	+/-63.5	+/-62.2								
50	+/-69.9	+/-67.6	+/-66.8	+/-65.7	+/-64.7	+/-62.9	+/-62.1									
52	+/-69	+/-66.6	+/-65.7	+/-64.6	+/-63.6	+/-61.7										
54	+/-68.3	+/-65.7	+/-64.8	+/-63.6	+/-62.6											
56	+/-67.7	+/-65	+/-64.1	+/-62.8												
58	+/-67.3	+/-64.5	+/-63.5													
60	+/-67															
62	+/-66.9															
63-3/16	+/-66.8															

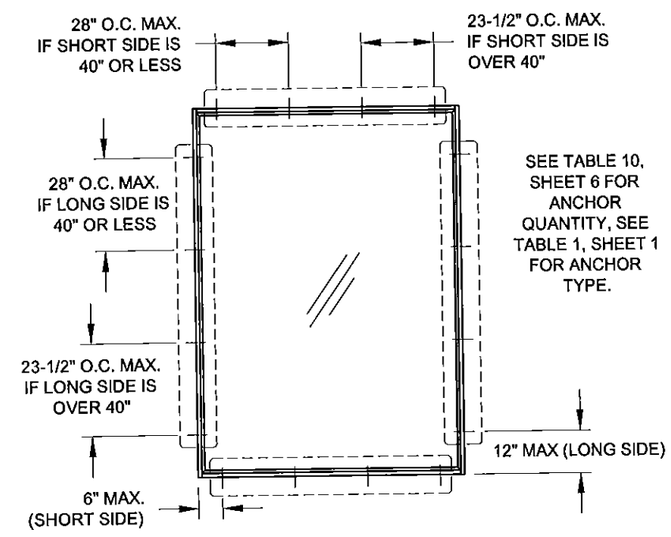

(NARROW STILES AND NARROW RAILS SHOWN ON SIDELITES)

NOTES:
1) NARROW OR WIDE STILES AND RAILS MAY BE MIXED WITHIN THE SAME SIDELITE/TRANSOM OR MULLED ASSEMBLY.
2) SIDELITE/TRANSOM MAY BE A SINGLE, STAND-ALONE UNIT.
3) FOR SIZES NOT SHOWN, ROUND UP TO THE NEXT AVAILABLE SHORT OR LONG DIMENSION.

PRODUCT REVISED
as complying with the Florida
Building Code
Acceptance No. 15-0409.03
Expiration Date 01/23/2019
By Manuel Gerez
Miami Dade Product Control

Rev.	
Rev. A	A) CORRECTED TABLE 8 DIM. - JR - 03/18/15
Rev. B	
Rev. C	

1070 TECHNOLOGY DRIVE
N. VENICE, FL 34275
P.O. BOX 1529
NOKOMIS, FL 34274
(941)-480-1600
CERT. OF AUTH. #29296

Series	Desc.	Sheet	Scale	DWG No.	Drawn By	Date	Rev.
FD-5555	DESIGN PRESSURE 2	NTS	5 OF 12	MD-555.1	J ROSOWSKI	5/7/13	A

Title: VINYL FRENCH DOOR AND SLT/TR

ANTHONY LYNN MILLER
LICENSE
No. 58705
STATE OF FLORIDA
PROFESSIONAL ENGINEER
A. LYNN MILLER, P.E.
P.E.# 58705

TABLE 10:

Sidelite/Transom Anchor Quantity

Short Side (in)		Long Side (in) 63-3/16		66-5/8		68		70		72		76		78		82		84		88		92		96		98		104			108		111	
		Anchor Group A	Anchor Groups B-D	Anchor Group A	Anchor Groups B-D	Anchor Group A	Anchor Groups B-D	Anchor Group A	Anchor Groups B-D	Anchor Group A	Anchor Groups B-D	Anchor Group A	Anchor Groups B-D	Anchor Group A	Anchor Groups B-D	Anchor Group A	Anchor Groups B-D	Anchor Group A	Anchor Groups B-D	Anchor Group A	Anchor Groups B-D	Anchor Group A	Anchor Groups B-D	Anchor Group A	Anchor Groups B-D	Anchor Group A	Anchor Groups B-D	Anchor Group A	Anchor Group B	Anchor Groups C-D	Anchor Group A	Anchor Groups B-D	Anchor Group A	Anchor Groups B-D
24	Short Side	2	2	2	2	2	2	2	2	2	2	2	2	2	2	2	2	2	2	2	2	2	2	2	2	2	2	2	2	2	2	2	2	2
	Long Side	4	4	4	4	4	4	4	4	4	4	4	4	4	4	4	4	5	5	5	5	5	5	5	5	5	5	6	5	5	6	6	6	6
28	Short Side	2	2	2	2	2	2	2	2	2	2	2	2	2	2	2	2	2	2	2	2	2	2	2	2	2	2	2	2	2	2	2	2	2
	Long Side	4	4	4	4	4	4	4	4	4	4	5	4	5	4	5	4	5	5	5	5	6	5	6	5	6	5	6	5	5	7	6	7	6
32	Short Side	2	2	2	2	2	2	2	2	2	2	2	2	2	2	2	2	2	2	2	2	2	2	2	2	2	2	2	2	2	2	2	2	2
	Long Side	4	4	4	4	4	4	4	4	5	4	5	4	5	4	5	4	6	5	6	5	6	5	6	5	7	5	7	5	5	7	6	8	6
36	Short Side	2	2	2	2	2	2	2	2	2	2	2	2	2	2	2	2	2	2	2	2	2	2	2	2	2	2	2	2	2	2	2	2	2
	Long Side	4	4	5	4	5	4	5	4	5	4	5	4	5	4	6	4	6	5	6	5	7	5	7	5	7	5	8	5	5	7	6	8	6
38-3/4	Short Side	2	2	2	2	2	2	2	2	2	2	2	2	2	2	2	2	2	2	2	2	2	2	2	2	2	2	2	2	2	2	2	2	2
	Long Side	4	4	5	4	5	4	5	4	5	4	6	4	6	4	6	4	6	5	7	5	7	5	7	5	8	5	8	5	5	8	6	9	6
40	Short Side	2	2	2	2	2	2	2	2	2	2	2	2	2	2	2	2	2	2	2	2	2	2	2	2	2	2	2	2	2	2	2	2	2
	Long Side	4	4	5	4	5	4	5	4	5	4	6	4	6	4	6	4	6	5	7	5	7	5	8	5	8	5	8	5	5	9	6	9	6
42	Short Side	3	3	3	3	3	3	3	3	3	3	3	3	3	3	3	3	3	3	3	3	3	3	3	3	3	3	3	3	3				
	Long Side	5	4	5	4	5	4	5	4	5	4	6	4	6	4	6	4	7	5	7	5	7	5	8	5	8	5	8	6	5				
44	Short Side	3	3	3	3	3	3	3	3	3	3	3	3	3	3	3	3	3	3	3	3	3	3	3	3	3	3							
	Long Side	5	4	5	4	5	4	5	4	6	4	6	4	6	4	7	4	7	5	7	5	7	5	8	5	8	5							
46	Short Side	3	3	3	3	3	3	3	3	3	3	3	3	3	3	3	3	3	3	3	3	3	3	3	3									
	Long Side	5	4	5	4	5	4	6	4	6	4	6	4	6	4	7	4	7	5	7	5	7	5	8	5									
48	Short Side	3	3	3	3	3	3	3	3	3	3	3	3	3	3	3	3	3	3	3	3	3	3											
	Long Side	5	4	5	4	5	4	6	4	6	4	6	4	6	4	7	4	7	5	7	5	7	5											
50	Short Side	3	3	3	3	3	3	3	3	3	3	3	3	3	3	3	3	3	3	3	3													
	Long Side	5	4	5	4	5	4	6	4	6	4	6	4	6	4	7	4	7	5	7	5													
52	Short Side	4	3	4	3	4	3	4	3	4	3	3	3	3	3	3	3	3	3															
	Long Side	5	4	5	4	6	4	6	4	6	4	6	4	6	4	7	4	7	5															
54	Short Side	4	3	4	3	4	3	4	3	4	3	4	3	4	3	4	3																	
	Long Side	5	4	5	4	6	4	6	4	6	4	6	4	6	4	7	4																	
56	Short Side	4	3	4	3	4	3	4	3	4	3	4	3	4	3																			
	Long Side	5	4	6	4	6	4	6	4	6	4	6	4	6	4																			
58	Short Side	4	3	4	3	4	3	4	3	4	3	4	3																					
	Long Side	5	4	6	4	6	4	6	4	6	4	6	4																					
60	Short Side	5	4	5	4	5	4	4	4	4	4																							
	Long Side	5	4	6	4	6	4	6	4	6	4																							
62	Short Side	5	4	5	4	5	4	5	4																									
	Long Side	5	4	6	4	6	4	6	4																									
63-3/16	Short Side	5	4	5	4	5	4																											
	Long Side	5	4	6	4	6	4																											
66-5/8	Short Side	6	4	6	4																													
	Long Side	5	4	6	4																													

NOTES:
1) NARROW OR WIDE STILES AND RAILS MAY BE MIXED WITHIN THE SAME SIDELITE/TRANSOM OR MULLED ASSEMBLY.
2) SIDELITE/TRANSOM MAY BE A SINGLE, STAND-ALONE UNIT.
3) FOR SIZES NOT SHOWN, ROUND UP TO THE NEXT AVAILABLE SHORT OR LONG DIMENSION.

PRODUCT REVISED
as complying with the Florida
Building Code
Acceptance No. 15-0409.03
Expiration Date 01/23/2019
By Manuel Perez
Miami Dade Product Control

Rev A	A) NO CHANGES THIS SHEET - JR - 03/18/15
Rev B	
Rev C	

PGT®
CERT. OF AUTH. #29296
1070 TECHNOLOGY DRIVE
N. VENICE, FL 34275
P.O. BOX 1529
NOKOMIS, FL 34274
(941)-480-1600

Title	VINYL FRENCH DOOR AND SLT/TR
Desc.	SLT/TR ANCHOR QUANTITIES
Series	FD-5555
Scale	NTS
Sheet	6 OF 12
DWG No.	MD-555.1
Rev.	A
Drawn By	J ROSOWSKI
Date	5/7/13

ANTHONY LYNN MILLER
LICENSE
No. 58705
STATE OF FLORIDA
PROFESSIONAL ENGINEER
6/16/15

A. LYNN MILLER, P.E.
P.E.# 58705

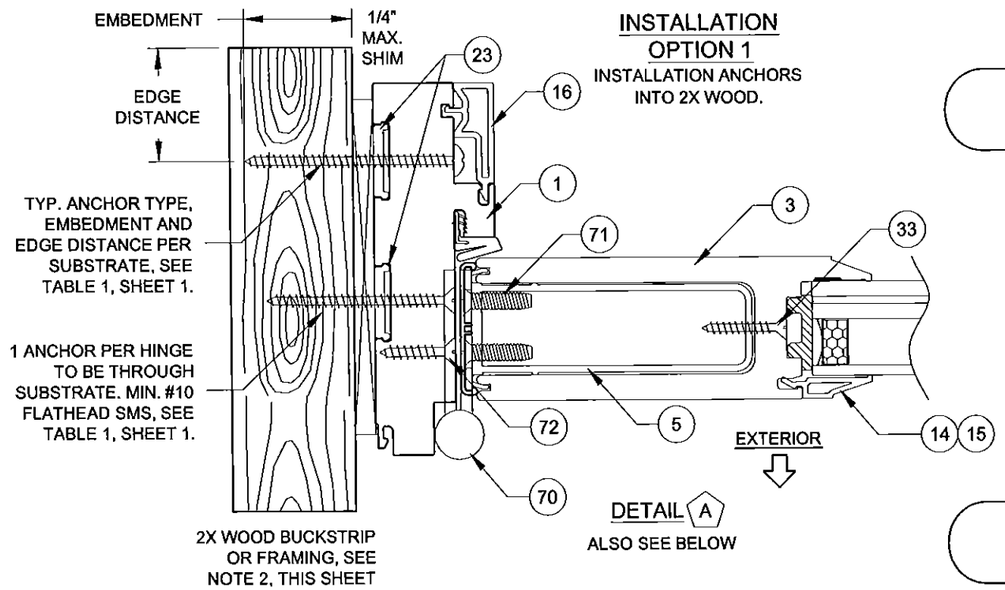

INSTALLATION OPTION 1

INSTALLATION ANCHORS INTO 2X WOOD.

DETAIL A

ALSO SEE BELOW

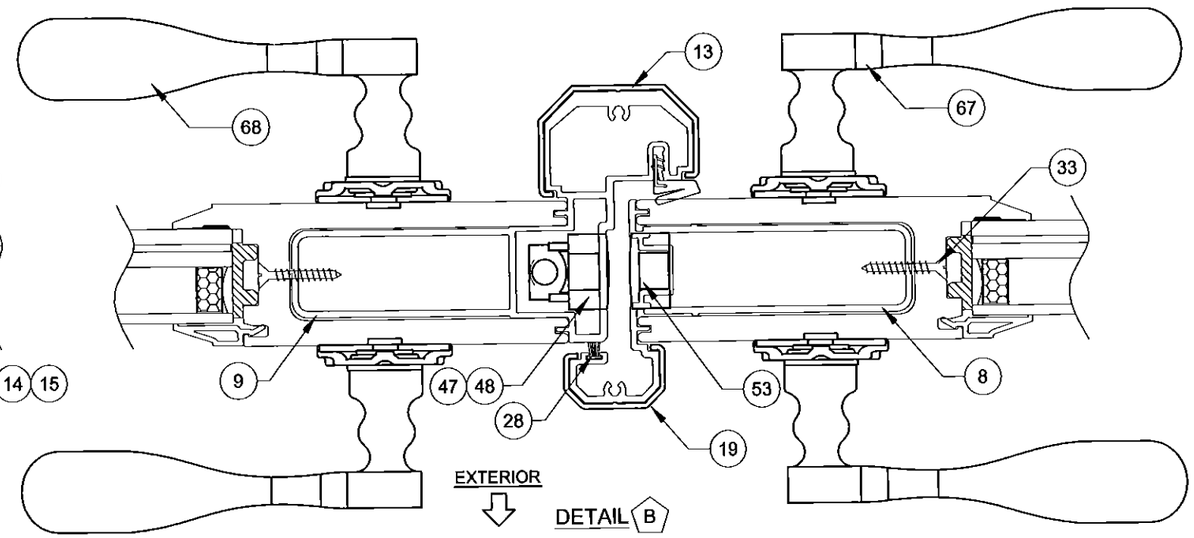

DETAIL B

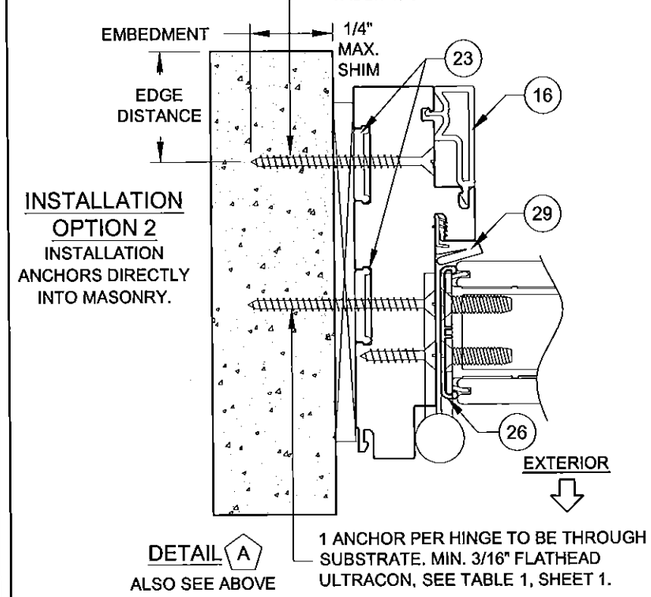

INSTALLATION OPTION 2

INSTALLATION ANCHORS DIRECTLY INTO MASONRY.

DETAIL A

ALSO SEE ABOVE

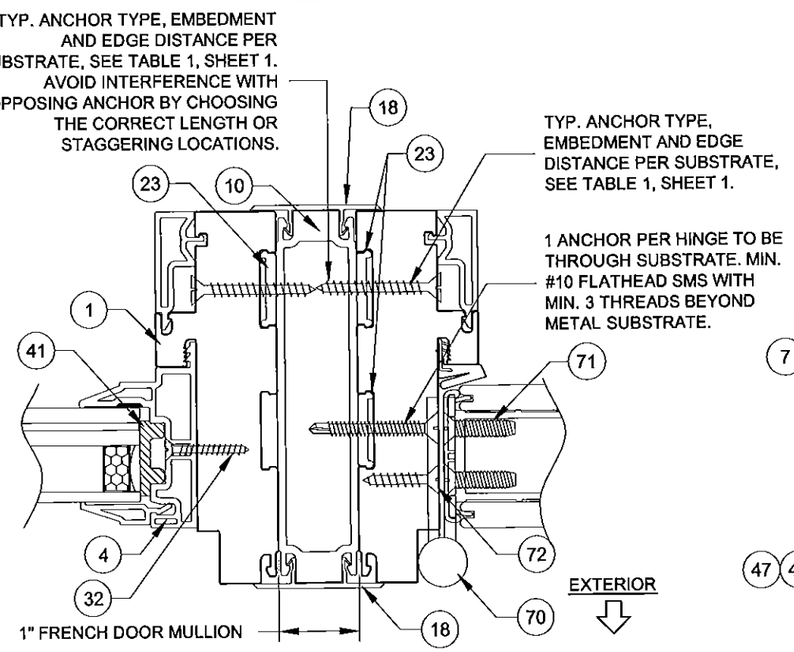

DETAIL I

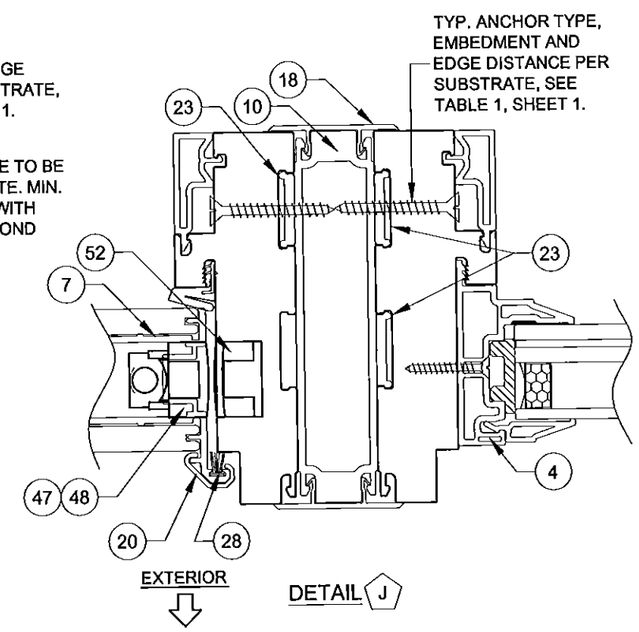

DETAIL J

INSTALLATION NOTES:

1) USE ONLY SUBSTRATE-APPROPRIATE ANCHORS LISTED ON TABLE 1, SHEET 1. FOLLOW EMBEDMENT AND EDGE DISTANCE LIMITS. ANY INSTALLATION OPTION SHOWN MAY BE USED ON ANY SIDE OF THE DOOR, SIDELITE OR TRANSOM.
2) WOOD BUCKS DEPICTED ON THIS SHEET AS "1X", ARE BUCKS WHOSE TOTAL THICKNESS IS LESS THAN 1-1/2". 1X WOOD BUCKS ARE OPTIONAL IF UNIT CAN BE INSTALLED DIRECTLY TO MASONRY. WOOD BUCKS DEPICTED AS "2X" ARE 1-1/2" THICK OR GREATER. INSTALLATION TO THE SUBSTRATE OF WOOD BUCKS TO BE ENGINEERED BY OTHERS OR AS APPROVED BY THE AUTHORITY HAVING JURISDICTION.
3) FOR ATTACHMENT TO METAL: THE STRUCTURAL MEMBER SHALL BE OF A SIZE TO PROVIDE FULL SUPPORT TO THE FRAME OF THE DOOR, SIDELITE OR TRANSOM.
4) IF APPLICABLE, LOWEST DESIGN PRESSURE FROM DOOR, SIDELITE, TRANSOM OR MULLION APPLIES TO THE WHOLE SYSTEM.

PRODUCT REVISED
as complying with the Florida Building Code
Acceptance No. 15-0409.03
Expiration Date 02/23/2019
By Manuel Perez
Miami-Dade Product Control

Rev. A	A) NO CHANGES THIS SHEET - JR - 03/18/15
Rev. B	
Rev. C	

PGT®
CERT. OF AUTH. #29296
1070 TECHNOLOGY DRIVE
N. VENICE, FL 34275
P.O. BOX 1529
NOKOMIS, FL 34274
(941)-480-1600

Series	FD-5555
Scale	NTS
Sheet	7 OF 12
DWG No.	MD-555.1
Rev.	A
Drawn By	J ROSOWSKI
Date	5/7/13
Desc.	INSTALLATION 1
Title	VINYL FRENCH DOOR AND SLT/TR

ANTHONY LYNN MILLER
LICENSE
No. 58705
6/16/15
STATE OF FLORIDA
PROFESSIONAL ENGINEER

A. LYNN MILLER, P.E.
P.E.# 58705

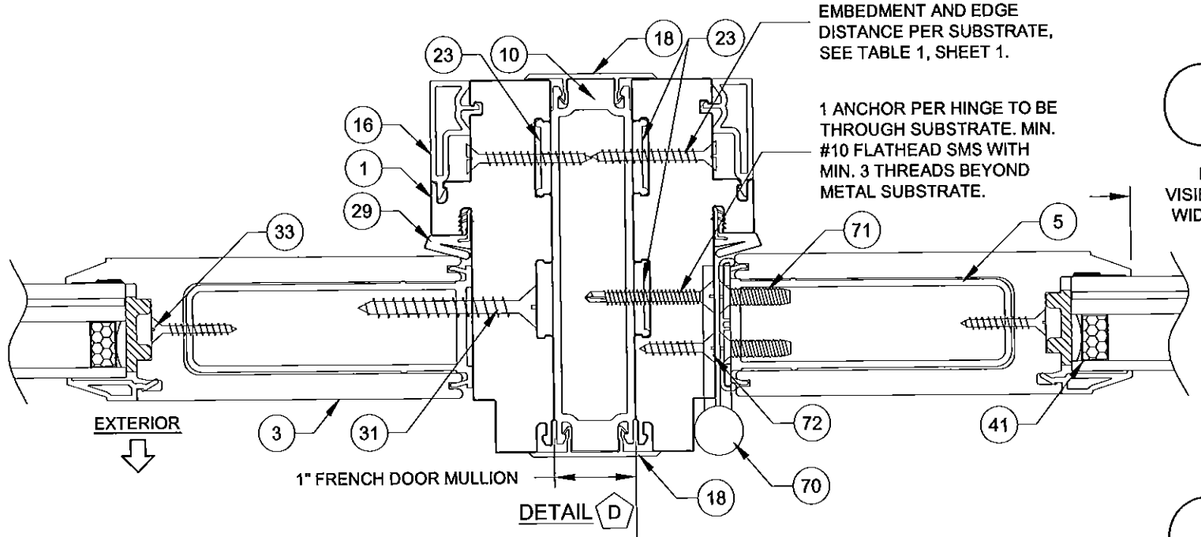

INSTALLATION OPTION 4

INSTALLATION ANCHORS DIRECTLY INTO METAL.

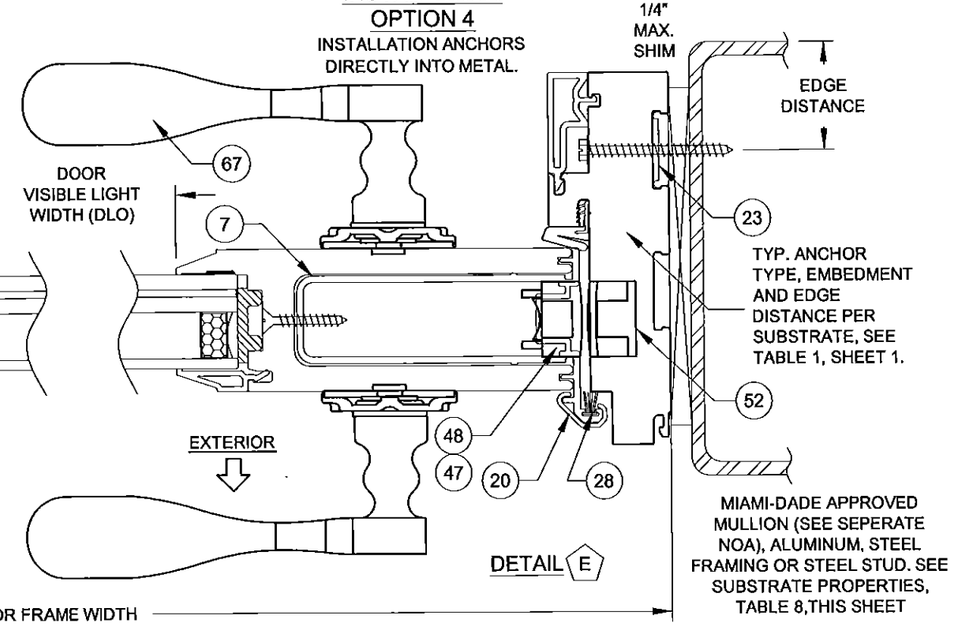

INSTALLATION OPTION 3

INSTALLATION ANCHORS THROUGH 1X BUCKSTRIP INTO MASONRY.

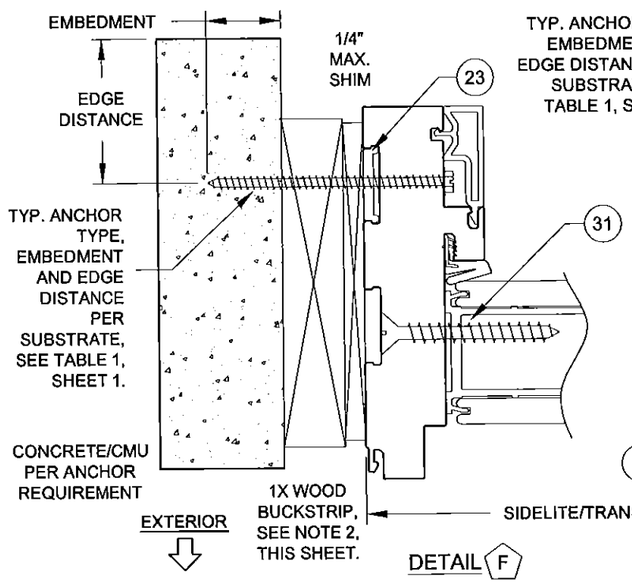

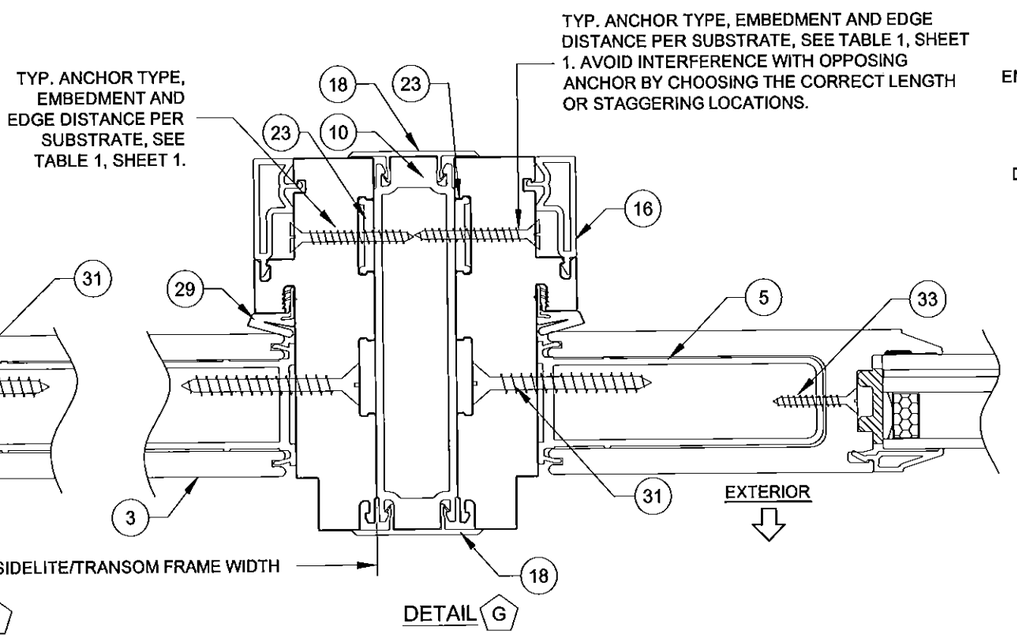

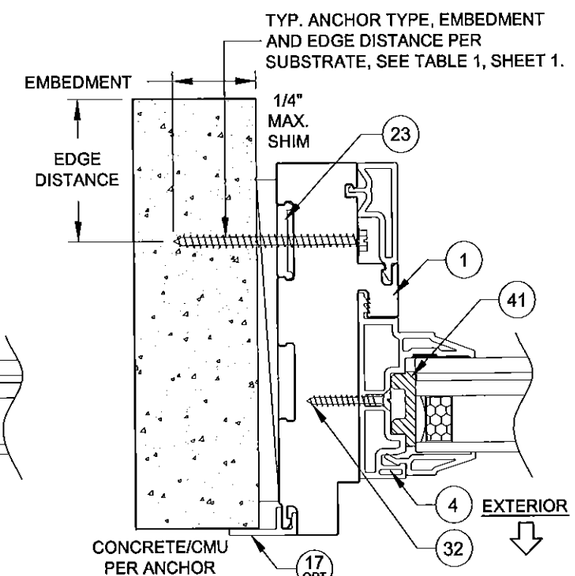

INSTALLATION OPTION 2

INSTALLATION ANCHORS DIRECTLY INTO MASONRY.

INSTALLATION NOTES:

1) USE ONLY SUBSTRATE-APPROPRIATE ANCHORS LISTED ON TABLE 1, SHEET 1. FOLLOW EMBEDMENT AND EDGE DISTANCE LIMITS. ANY INSTALLATION OPTION SHOWN MAY BE USED ON ANY SIDE OF THE DOOR, SIDELITE OR TRANSOM.
2) WOOD BUCKS DEPICTED ON THIS SHEET AS "1X", ARE BUCKS WHOSE TOTAL THICKNESS IS LESS THAN 1-1/2". 1X WOOD BUCKS ARE OPTIONAL IF UNIT CAN BE INSTALLED DIRECTLY TO MASONRY. WOOD BUCKS DEPICTED AS "2X" ARE 1-1/2" THICK OR GREATER. INSTALLATION TO THE SUBSTRATE OF WOOD BUCKS TO BE ENGINEERED BY OTHERS OR AS APPROVED BY THE AUTHORITY HAVING JURISDICTION.
3) FOR ATTACHMENT TO METAL: THE STRUCTURAL MEMBER SHALL BE OF A SIZE TO PROVIDE FULL SUPPORT TO THE FRAME OF THE DOOR, SIDELITE OR TRANSOM.
4) IF APPLICABLE, LOWEST DESIGN PRESSURE FROM DOOR, SIDELITE, TRANSOM OR MULLION APPLIES TO THE WHOLE SYSTEM.

PRODUCT REVISED
as complying with the Florida Building Code
Acceptance No 15-0409.03
Expiration Date 01/23/2019
By Manuel Perez
Miami Dade Product Control

Rev A	A) NO CHANGES THIS SHEET - JR - 03/18/15
Rev B	
Rev C	

PGT®
CERT. OF AUTH. #29296
1070 TECHNOLOGY DRIVE
N. VENICE, FL 34275
P.O. BOX 1529
NOKOMIS, FL 34274
(941)-480-1600

Series	Desc.	Title	Sheet	Scale	DWG No.	Drawn By	Date	Rev.
FD-5555	INSTALLATION 2	VINYL FRENCH DOOR AND SLT/TR	8 OF 12	NTS	MD-555.1	J ROSOWSKI	5/7/13	A

ANTHONY LYNN MILLER
LICENSE
No. 58705
6/16/15
STATE OF FLORIDA
PROFESSIONAL ENGINEER
A. LYNN MILLER, P.E.
P.E.# 58705

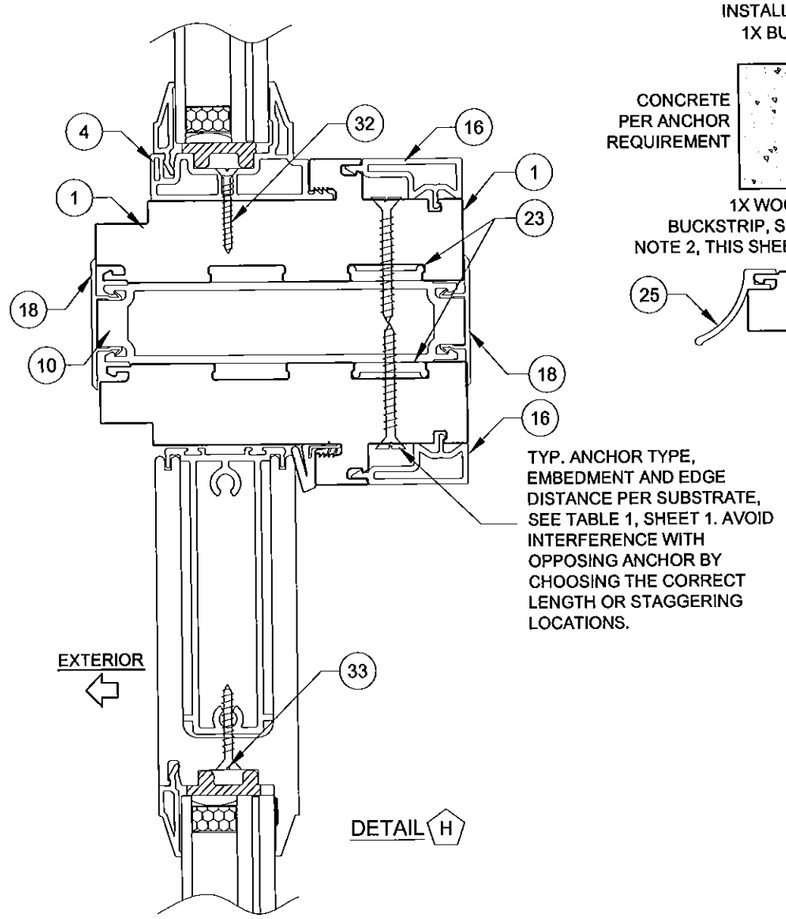

INSTALLATION OPTION 3

INSTALLATION ANCHORS THROUGH 1X BUCKSTRIP INTO MASONRY.

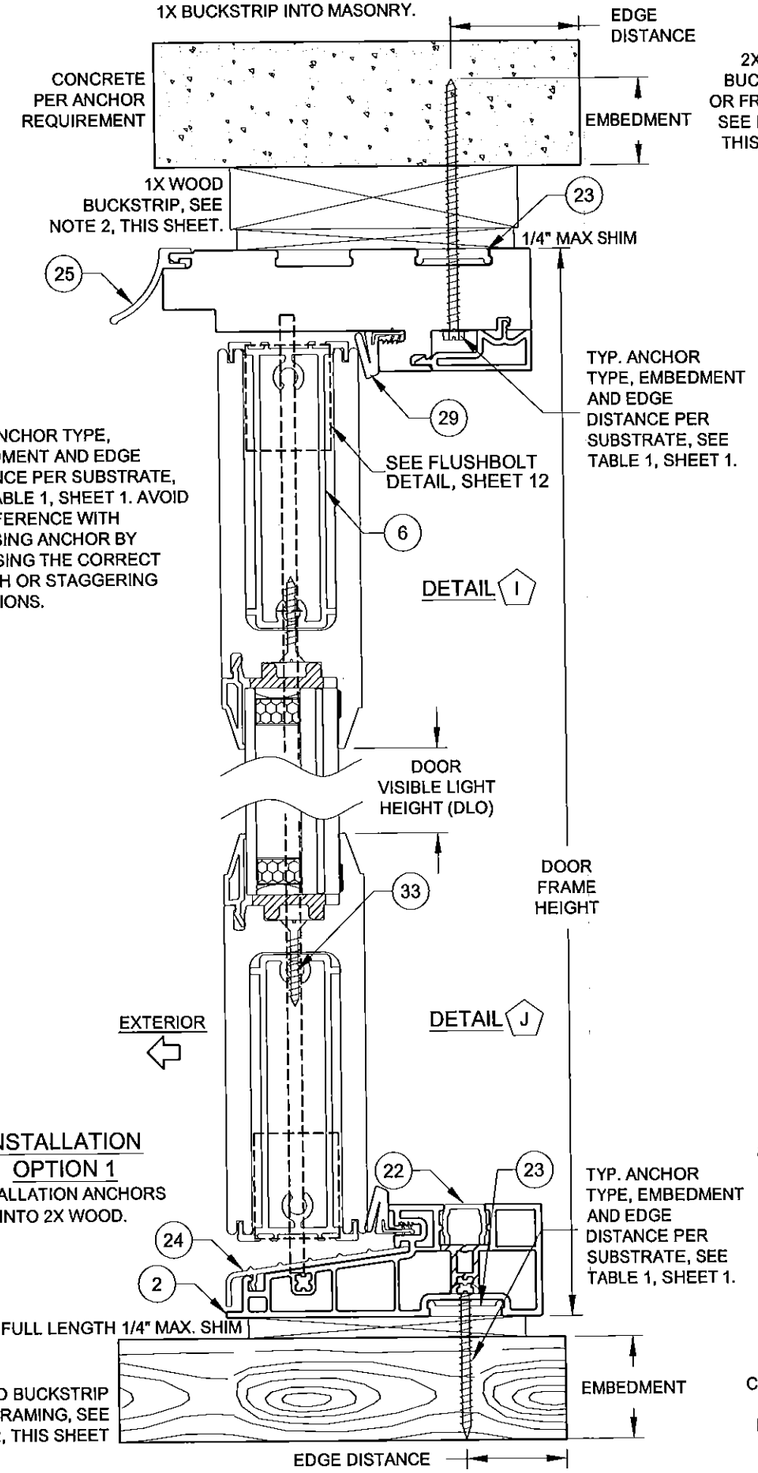

INSTALLATION OPTION 4

INSTALLATION ANCHORS THROUGH 1X BUCKSTRIP INTO 2X WOOD.

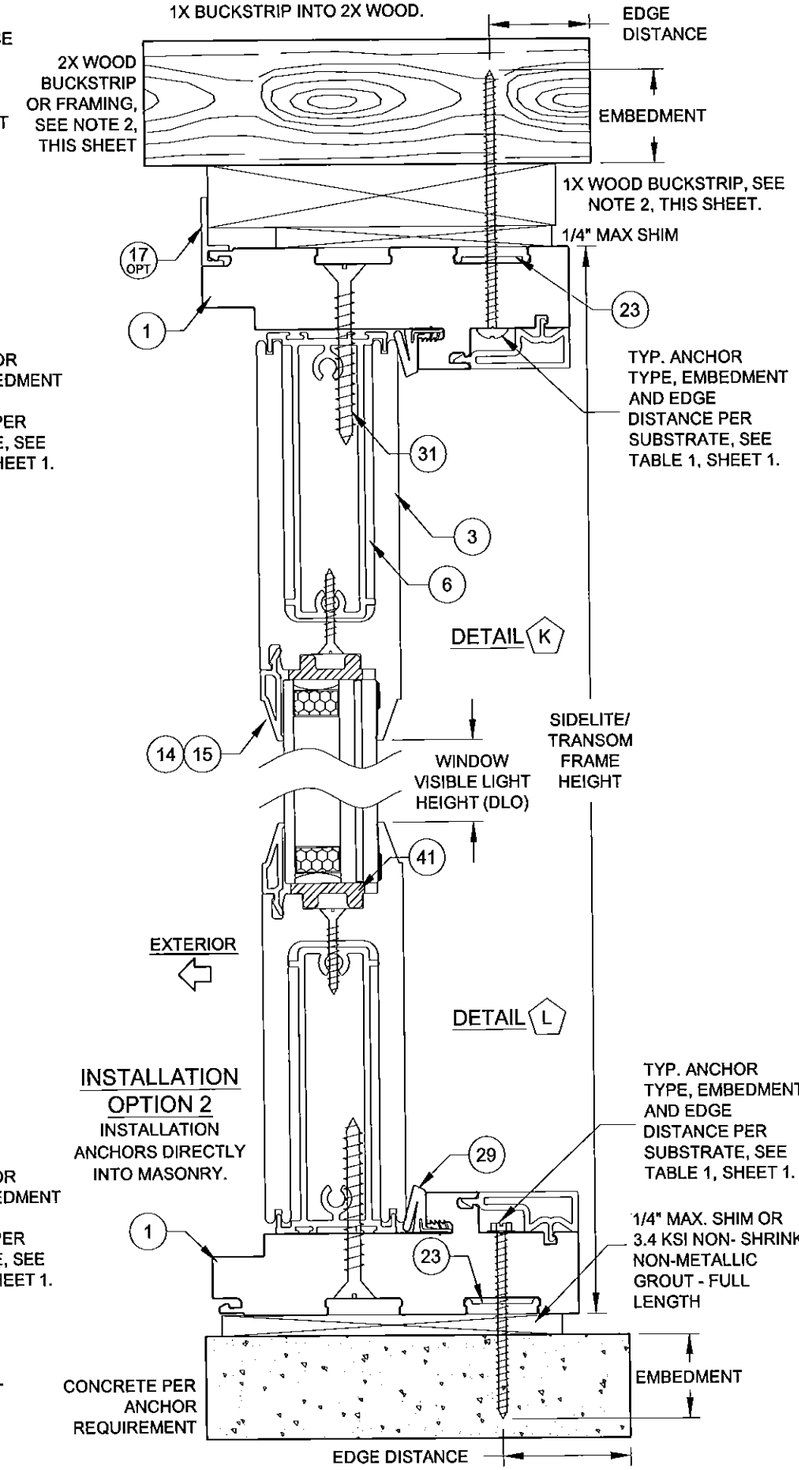

INSTALLATION OPTION 1

INSTALLATION ANCHORS INTO 2X WOOD.

INSTALLATION OPTION 2

INSTALLATION ANCHORS DIRECTLY INTO MASONRY.

INSTALLATION NOTES:

1) USE ONLY SUBSTRATE-APPROPRIATE ANCHORS LISTED ON TABLE 1, SHEET 1. FOLLOW EMBEDMENT AND EDGE DISTANCE LIMITS. ANY INSTALLATION OPTION SHOWN MAY BE USED ON ANY SIDE OF THE DOOR, SIDELITE OR TRANSOM.

2) WOOD BUCKS DEPICTED ON THIS SHEET AS "1X", ARE BUCKS WHOSE TOTAL THICKNESS IS LESS THAN 1-1/2". 1X WOOD BUCKS ARE OPTIONAL IF UNIT CAN BE INSTALLED DIRECTLY TO MASONRY. WOOD BUCKS DEPICTED AS "2X" ARE 1-1/2" THICK OR GREATER. INSTALLATION TO THE SUBSTRATE OF WOOD BUCKS TO BE ENGINEERED BY OTHERS OR AS APPROVED BY THE AUTHORITY HAVING JURISDICTION.

3) FOR ATTACHMENT TO METAL: THE STRUCTURAL MEMBER SHALL BE OF A SIZE TO PROVIDE FULL SUPPORT TO THE FRAME OF THE DOOR, SIDELITE OR TRANSOM.
4) IF APPLICABLE, LOWEST DESIGN PRESSURE FROM DOOR, SIDELITE, TRANSOM OR MULLION APPLIES TO THE WHOLE SYSTEM.

PRODUCT REVISED
as complying with the Florida Building Code
Acceptance No 15-0409.03
Expiration Date 01/23/2019
By Manuel Perez
Miami Dade Product Control

Rev A	A) NO CHANGES THIS SHEET - JR - 03/18/15
Rev B	
Rev C	

PGT®
CERT. OF AUTH. #29296
1070 TECHNOLOGY DRIVE
N. VENICE, FL 34275
P.O. BOX 1529
NOKOMIS, FL 34274
(941)-480-1600

Title	VINYL FRENCH DOOR AND SLT/TR
Desc.	INSTALLATION 3
Series	FD-5555
Scale	NTS
Sheet	9 OF 12
DWG No.	MD-555.1
Rev.	A
Drawn By	J ROSOWSKI
Date	5/7/13

ANTHONY LYNN MILLER
LICENSE
No. 58705
6/16/15
STATE OF FLORIDA
PROFESSIONAL ENGINEER

A. LYNN MILLER, P.E.
P.E.# 58705

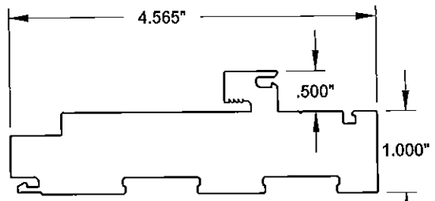

1 FRAME HEAD & JAMB
#20000,Rigid Cellular PVC

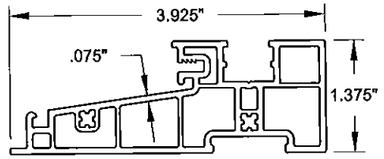

2 FRAME SILL
#20001, Rigid PVC

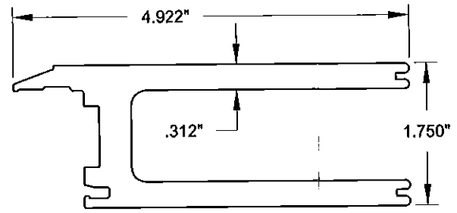

3 PANEL RAIL & STILE
#20002, Rigid Cellular PVC

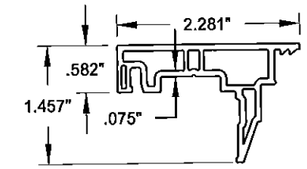

4 SIDELITE ADAPTER
#20003, Rigid PVC

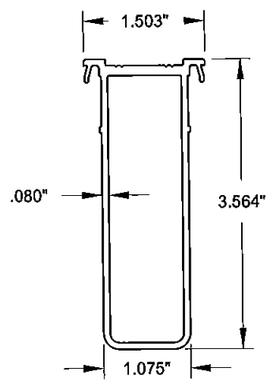

5 HINGE STILE REINFORCEMENT
#20013, 6063-T6

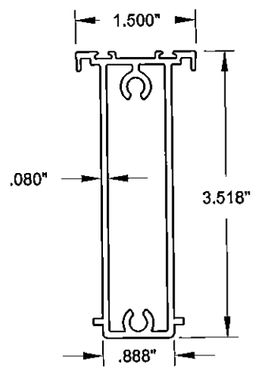

6 TOP & BOTTOM RAIL REINFORCEMENT
#20014, 6063-T6

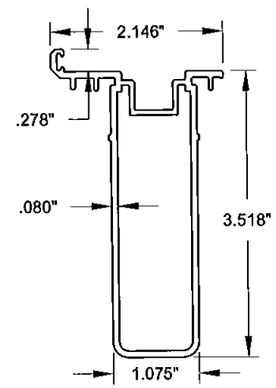

7 PANEL STILE REINFORCEMENT
#20015, 6063-T6

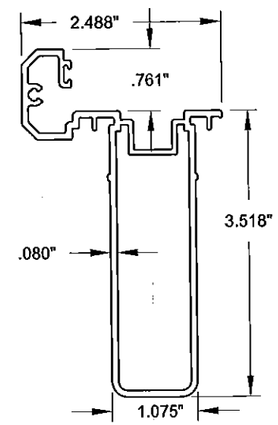

8 ACTIVE ASTRAGAL
#20016, 6063-T6

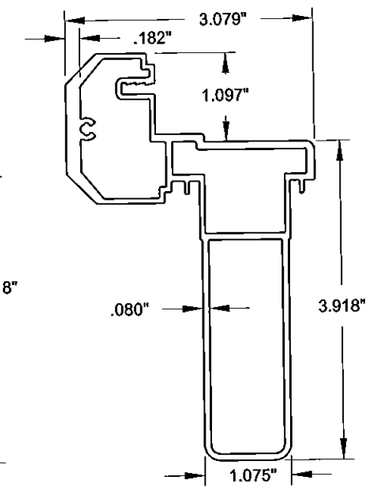

9 INACTIVE ASTRAGAL
#20017, 6063-T6

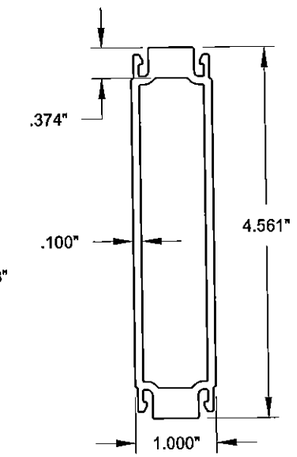

10 1" FRENCH DOOR MULLION
#20022, 6063-T6

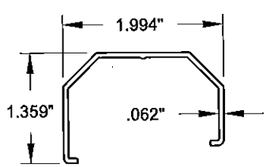

13 INACTIVE ASTRAGAL COVER
#20004, Rigid PVC

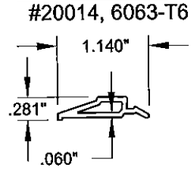

14 BEVELED BEAD
#20005, Rigid PVC

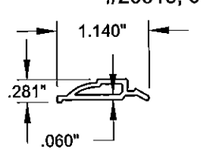

15 OGEE BEAD
#20006, Rigid PVC

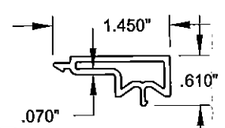

16 FRAME SCREW COVER
#20007, Rigid PVC

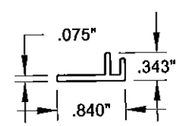

17 ADD-ON FIN/FLANGE
#20008, Rigid PVC

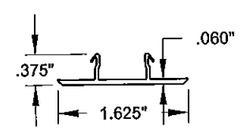

18 1" MULLION CAP
#20009, Rigid PVC

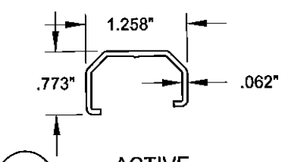

19 ACTIVE ASTRAGAL COVER
#20011, Rigid PVC

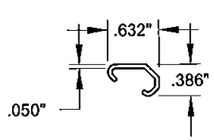

20 SINGLE DOOR ASTRAGAL COVER
#20012, Rigid PVC

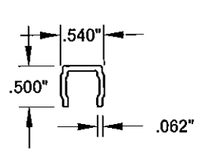

22 SILL CAP
#19009, Rigid PVC

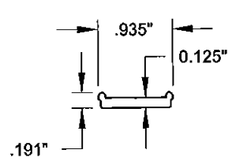

23 ANCHOR PLATE
#19031, 6063-T6

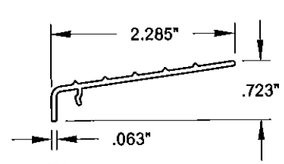

24 THRESHOLD CAP
#20020, 6063-T6

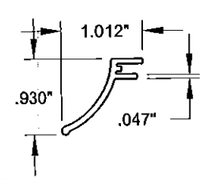

25 DRIP CAP
#20021, 6063-T6

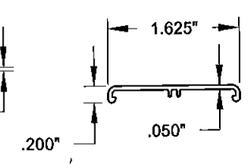

26 HINGE TRIM COVER
#20023, Rigid PVC

ALL RIGID AND RIGID CELLULAR PVC BY VISION EXTRUSIONS, LTD.

PRODUCT REVISED
as complying with the Florida
Building Code
Acceptance No 15-0409.03
Expiration Date 01/23/2019
By Manuel Perez
Miami-Dade Product Control

Rev A	A) NO CHANGES THIS SHEET - JR - 03/18/15
Rev B	
Rev C	

1070 TECHNOLOGY DRIVE
N. VENICE, FL 34275
P.O. BOX 1529
NOKOMIS, FL 34274
(941)-480-1600
CERT. OF AUTH. #29296

Title	VINYL FRENCH DOOR AND SLT/TR	Date	5/7/13	Rev.	A
Desc.	EXTRUSIONS	Drawn By	J ROSOWSKI	DWG No.	MD-555.1
Series	FD-5555	Scale	NTS	Sheet	10 OF 12

ANTHONY LYNN MILLER
LICENSE
No. 58705
6/16/15
STATE OF FLORIDA
PROFESSIONAL ENGINEER

A. LYNN MILLER, P.E.
P.E.# 58705

TABLE 11:

#	PGT Part #	Description	Material
1	20000	Door & Sidelite/Transom Main Frame	Cellular PVC
2	20001	Door Frame Sill	Rigid PVC
3	20002	Panel Stile & Rail	Cellular PVC
4	20003	Sidelite Adapter	Rigid PVC
5	20013	Hinge Stile Reinforcement	Alum., 6063-T6
6	20014	Panel Rail Reinforcement	Alum., 6063-T6
7	20015	Panel Stile Reinforcement	Alum., 6063-T6
8	20016	Active Astragal	Rigid PVC
9	20017	Inactive Astragal	Rigid PVC
10	20022	1" French Door Mullion	Alum., 6063-T6
13	20004	Inactive Astragal Cover	Rigid PVC
14	20005	1-1/16" Bevel Bead	Rigid PVC
15	20006	1-1/16" Ogee Bead	Rigid PVC
16	20007	Screw Cover	Rigid PVC
17	20008	Add-on Fin/Flange	Rigid PVC
18	20009	1" Mullion Cap	Rigid PVC
19	20011	Active Astragal Cover	Rigid PVC
20	20012	Single Door Astragal Cover	Rigid PVC
22	20018	Sill Screw Cover	Rigid PVC
23	19031	Anchor Plate	Alum., 6063-T6
24	20020	Threshold Cover	Alum., 6063-T6
25	20021	Drip Cap	Rigid PVC
26	20023	Hinge Trim Cover	Rigid PVC
28		Fin Weatherstrip	
29	1671/3	Frame Weatherstrip	
31	714FPT410XW	Frame-to-Wide Slab Screw: #14 X 1-1/2" Ph. FH, 16.625" O.C.	Stainless Steel
32	7S101X	Frame-to-Nar. Slab Screw: #10 X 1" Ph. FH, 28" O.C.	Stainless Steel
33	78X1FPT410	Reinforcement Screw: #8 X 1" Ph. FH, 18" O.C.	Stainless Steel
34	710X2FPAX	Frame Assembly Screw: #10 X 2" Ph. FH	Stainless Steel
35	714FPT410XW	W-W Slab Assembly Screw: #14 X 1-1/2" Ph. FH	Stainless Steel
37	71420X2.25	N-W Slab Assembly Screw: #14 X 2-1/4" Ph. FH	Stainless Steel
38		Cardinal XL Edge Spacer	
39		Quanex DuraSeal Spacer, Composite Sealant/Dessicant	
40	62689	Quanex SuperSpacer, Foam EPDM w/ Dessiccant	
41	720026	Setting Block, (Duro.=85 +/- 5)	EPDM
42		Backbedding: Dow-995 or GE-7700	Silicone
43		Argon Gas	
44	6HL5140	Hot Melt Butyl	
47 - 73 see Hardware BOM, Table 12, Sheet 12			
90	20033	Inactive Astragal Cap	Acetal
91	20035	Active Astragal Cap	Acetal

ALL RIGID PVC AND RIGID CELLULAR PVC BY VISION EXTRUSIONS, LTD.
ANCHOR O.C. DIMENSIONS SHOWN AS MAXIMUM.

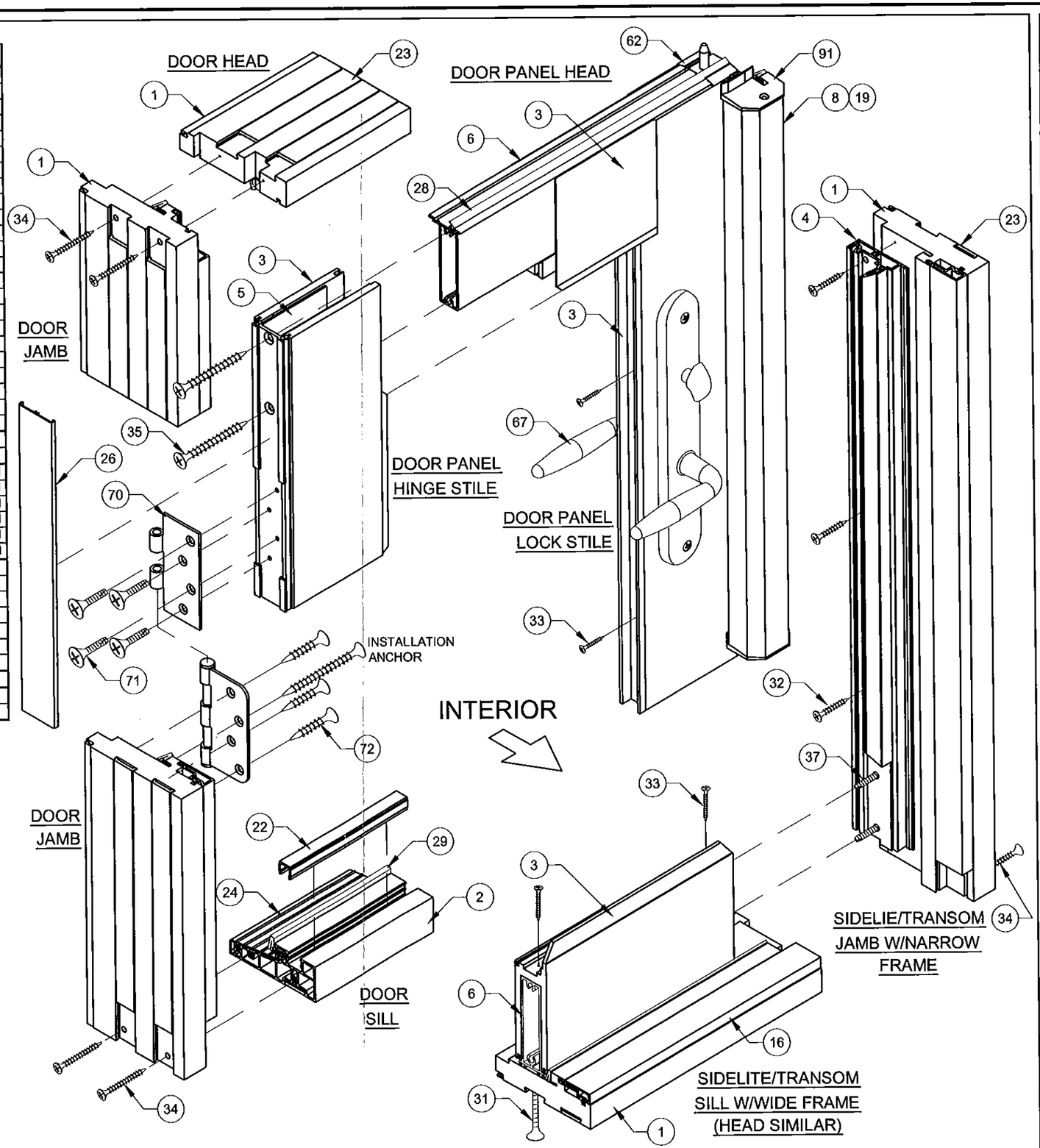

DAYLITE OPENING (DLO) SIZES

WHEN USING PART # 3: (WIDE RAILS OR STILES)
X DOOR FRAME HEIGHT- 12.1 = DLO HEIGHT
X DOOR FRAME WIDTH - 12.3 = DLO WIDTH
(XX DOOR FRAME HEIGHT) - 12.1 = DLO HEIGHT
(XX DOOR FRAME WIDTH / 2) - 11.5 = DLO WIDTH
SLT/TR FRAME HEIGHT- 12.1 = DLO HEIGHT
SLT/TR FRAME WIDTH - 12.1 = DLO WIDTH

WHEN USING PART # 4: (NARROW RAILS OR STILES)
SLT/TR FRAME HEIGHT- 4.9 = DLO HEIGHT
SLT/TR FRAME WIDTH - 4.9 = DLO WIDTH

PRODUCT REVISED
as complying with the Florida
Building Code
Acceptance No 15-0409.03
Expiration Date 01/23/2019
By Manuel
Miami-Dade Product Control

Rev A	A) ADDED #38 - JR - 03/18/15
Rev B	
Rev C	

1070 TECHNOLOGY DRIVE
N. VENICE, FL 34275
P.O. BOX 1529
NOKOMIS, FL 34274
(941)-480-1600
PGT®
CERT. OF AUTH. #29296

Series	FD-5555
Scale	NTS
Sheet	11 OF 12
DWG No.	MD-555.1
Rev.	A
Drawn By	J ROSOWSKI
Date	5/7/13
Desc.	CORNER DETAILS AND BOM
Title	VINYL FRENCH DOOR AND SLT/TR

ANTHONY LYNN MILLER
LICENSE
No. 58705
6/16/15
STATE OF FLORIDA
PROFESSIONAL ENGINEER

A. LYNN MILLER, P.E.
P.E.# 58705

HARDWARE DETAILS & LOCATIONS

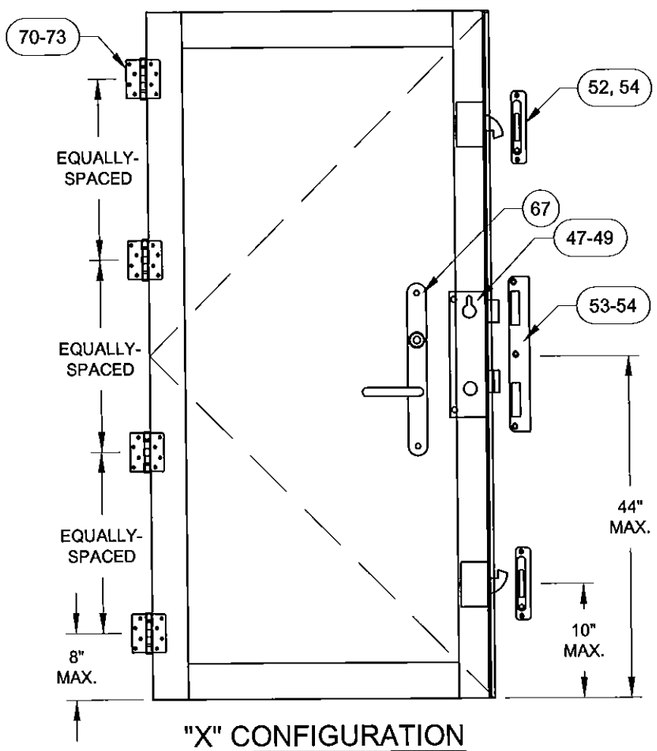

"X" CONFIGURATION

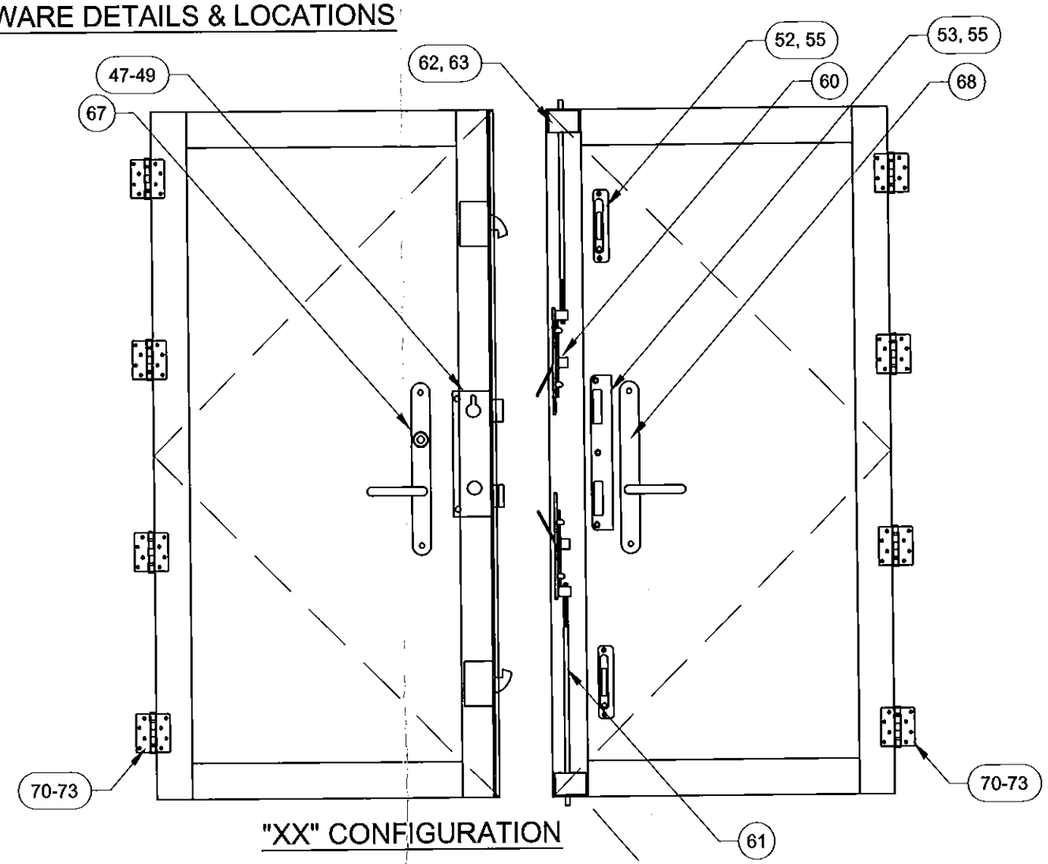

"XX" CONFIGURATION

SEE DETAIL, TOP LOCK SIMILAR

HINGE DETAIL:

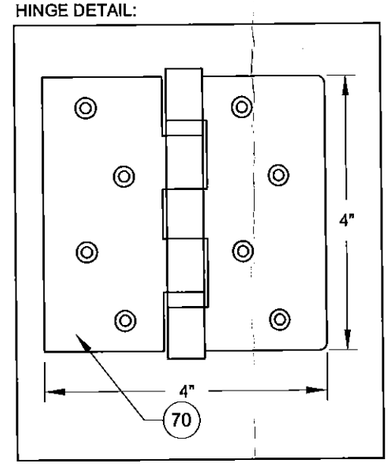

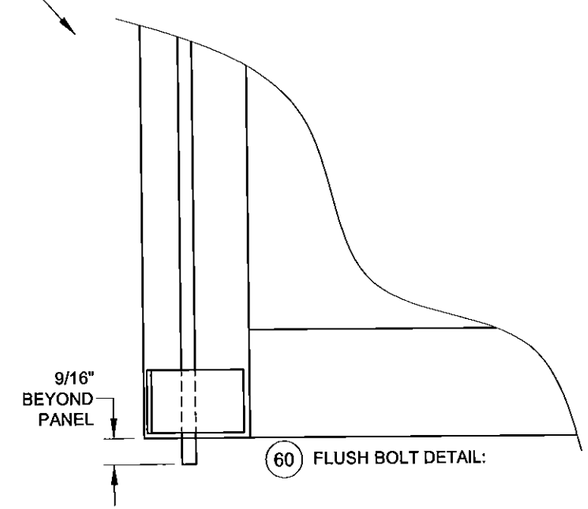

FLUSH BOLT DETAIL:

TABLE 12:

#	PGT Part #	Description	Material
47	666032701	P3000 3-PT Rhino Lock (6'8"), Amesbury Inc.	Stainless Steel
48	666032702	P3000 3-PT Rhino Lock (over 6'8"), Amesbury Inc.	Stainless Steel
49	71032X1FPFX	Rhino Lock Screw: 10-32 X 1" Phil. FH	Stainless Steel
52	20027	Adjustable Strike Plate Assembly, Amesbury Inc.	Stainless Steel
53	20028	Center Strike Plate Assembly, Amesbury Inc.	Stainless Steel
54	7S101X	Strike Plate Screw, (X): #10 X 1" Phil. FH	410 S.S.
55	78X12PFHUX	Strike Plate Screw, (XX): #8 X 1/2" Phil. FH	410 S.S.
60	7SB1202	Flush Bolt (XX)	
61	7803725	Flush Bolt Rod (XX)	
62	420034	Flush Bolt Guide (XX)	
63	7832X12FPXP	Flush Bolt Guide Screw: 8-32 X 1/2" Phil. FH	
64	48033N	Guide Pin (XX)	
65	78036	Flush Bolt Strike Plate (XX), Amesbury Inc.	Stainless Steel
66	7832X12FPXP	Flush Bolt Strike Plate Screw, (XX): #8 X 3/4" Phil. FH	410 S.S.
67	varies	Handle/Lever	
68	varies	Dummy Handle/Lever	
70	20025	Butt Hinge, Amesbury Inc.	Stainless Steel
71	71032X1FPFX	Hinge, Slab Screw: #10-32 X 1" Phil FH	Stainless Steel
72	7S101X	Hinge, Frame Screw: #10 X 1" Phil. FH	Stainless Steel

PRODUCT REVISED
as complying with the Florida
Building Code
Acceptance No 15-0409.03
Expiration Date 01/23/2019
By Manuel Perez
Miami Dade Product Control

Rev A	A) NO CHANGES THIS SHEET - JR - 03/18/15
Rev B	
Rev C	

1070 TECHNOLOGY DRIVE
N. VENICE, FL 34275
P.O. BOX 1529
NOKOMIS, FL 34274
(941)-480-1600

PGT® CERT. OF AUTH. #29296

Title	VINYL FRENCH DOOR AND SLT/TR
Desc.	DESIGN PRESSURE TABLES 3
Series	FD-5555
Scale	NTS
Sheet	12 OF 12
DWG No.	MD-555.1
Rev.	A
Drawn By	J ROSOWSKI
Date	

ANTHONY LYNN MILLER
LICENSE
No. 58705
6/16/15
STATE OF FLORIDA
PROFESSIONAL ENGINEER

A. LYNN MILLER, P.E.
P.E.# 58705