MIAMI-DADE COUNTY
PRODUCT CONTROL SECTION
11805 SW 26 Street, Room 208
Miami, Florida 33175-2474
T (786) 315-2590 F (786) 315-2599
www.miamidade.gov/economy

DEPARTMENT OF REGULATORY AND ECONOMIC RESOURCES (RER)
BOARD AND CODE ADMINISTRATION DIVISION

NOTICE OF ACCEPTANCE (NOA)

RC Home Showcase, Inc.
16115 N. W. 52nd Avenue,
Miami, FL 33014

SCOPE:

This NOA is being issued under the applicable rules and regulations governing the use of construction materials. The documentation submitted has been reviewed and accepted by Miami-Dade County RER -Product Control Section to be used in Miami Dade County and other areas where allowed by the Authority Having Jurisdiction (AHJ).

This NOA shall not be valid after the expiration date stated below. The Miami-Dade County Product Control Section (In Miami Dade County) and/or the AHJ (in areas other than Miami Dade County) reserve the right to have this product or material tested for quality assurance purposes. If this product or material fails to perform in the accepted manner, the manufacturer will incur the expense of such testing and the AHJ may immediately revoke, modify, or suspend the use of such product or material within their jurisdiction. RER reserves the right to revoke this acceptance, if it is determined by Miami-Dade County Product Control Section that this product or material fails to meet the requirements of the applicable building code.

This product is approved as described herein, and has been designed to comply with the Florida Building Code, including the High Velocity Hurricane Zone.

DESCRIPTION: Series CS240 Aluminum Sliding Glass Door–SMI

APPROVAL DOCUMENT: Drawing No. **14-405,** titled "Series CS240 SLD Glass Door (SMI), sheets 1 through 11 of 11, prepared by Eastern Engineering Group, dated 11/18/15, signed and sealed by Gonzalo A. Paz, P.E., bearing the Miami-Dade County Product Control Approval stamp with the Notice of Acceptance number and approval date by the Miami-Dade County Product Control Section.

MISSILE IMPACT RATING: Small Missile Impact Resistant
Limitations:

1. See Design Pressure (DP) table in sheet **2** and Head/sill anchor capacity tables in sheet **3**. Lower DP from the tables shall control. Free jamb conditions must be supported by 1" Thick shim at three locations (see sheet **2**)
2. Max. Door frame area not to exceed 160 ft^2. See sheet **8** for approved door configurations.

LABELING: Each unit shall bear a permanent label with the manufacturer's name or logo, city, state and series and following statement: "Miami-Dade County Product Control Approved", noted herein.

RENEWAL of this NOA shall be considered after a renewal application has been filed and there has been no change in the applicable building code negatively affecting the performance of this product.

TERMINATION of this NOA will occur after the expiration date or if there has been a revision or change in the materials, use, and/or manufacture of the product or process. Misuse of this NOA as an endorsement of any product, for sales, advertising or any other purposes shall automatically terminate this NOA. Failure to comply with any section of this NOA shall be cause for termination and removal of NOA.

ADVERTISEMENT: The NOA number preceded by the words Miami-Dade County, Florida, and followed by the expiration date may be displayed in advertising literature. If any portion of the NOA is displayed, then it shall be done in its entirety.

INSPECTION: A copy of this entire NOA shall be provided to the user by the manufacturer or its distributors and shall be available for inspection at the job site at the request of the Building Official.
This NOA consists of this page 1 and evidence pages E-1, as well as approval document mentioned above.
The submitted documentation was reviewed by **Ishaq I. Chanda, P.E.**

MIAMI-DADE COUNTY APPROVED

11/23/15

NOTICE OF ACCEPTANCE: EVIDENCE SUBMITTED

A. DRAWINGS

1. Manufacturer's die drawings and sections
2. Drawing No. **14-405,** titled "Series CS240 SLD Glass Door (SMI), sheets 1 through 11 of 11, prepared by Eastern Engineering Group, dated 11/18/15, signed and sealed by Gonzalo A. Paz, P.E.

B. TESTS

1. Test reports on 1) Air Infiltration Test, per FBC, TAS 202-94
   2) Uniform Static Air Pressure Test, Loading per FBC, TAS 202-94
   3) Water Resistance Test, per FBC, TAS 202-94
   4) Small Missile Impact Test per FBC, TAS 201-94
   5) Cyclic Wind Pressure Loading per FBC, TAS 203-94
   6) Forced Entry Test, per FBC 2411 3.2.1 and TAS 202-94

Along with marked-up drawings and installation diagram of Aluminum Sliding Glass Doors, prepared by Hurricane Engineering & Testing, Inc., Test Report No(s). **HETI-15-5008**, dated 03/17/15, **HETI-15-5009**, dated 03/17/15 **HETI-15-5011**, dated 03/17/15 and **HETI-15-5012**, signed and sealed by Rafael E. Droz-Seda, P.E.

C. CALCULATIONS

1. Anchor verification calculation, complying w/ FBC 2014(5th Edition), dated 05/13/2015, 08/24/15 and last revised on 10/21/15, prepared by Eastern Engineering Group, signed and sealed by Gonzalo A. Paz, P.E.
2. Glazing complies with ASTME-1300-02,-04 & -09.

D. QUALITY ASSURANCE

1. Miami Dade Department of Regulatory and Economic Resources (RER).

E. MATERIAL CERTIFICATIONS

1. Notice of Acceptance No. **14-0916.11** issued to **Kuraray America, Inc.** (Former E.I. DuPont DeNemours & Co., Inc. for the "**Sentry Glass ® (Clear and White) Glass Interlayers**", expiring on 07/04/18.
2. Notice of Acceptance No. **14-0916.10** issued to **Kuraray America, Inc.** (Former E.I. DuPont DeNemours & Co., Inc. for the "**Kurray Butacite PVB Interlayers**", expiring on 12/11/2016.
3. Technical data sheet of thermoplastic Sarlin TPV 5765B by Teknor Apex Company.

F. STATEMENTS

1. Statement letter of compliance to FBC 2014 (5th Edition) and of "No financial interest" dated AUG 20, 2015 prepared by Eastern Engineering Group, signed and sealed by Gonzalo A. Paz, P.E.
2. Statement of Lab compliance, part of above test reports.

G. OTHER

1. None

Ishaq I. Chanda

Ishaq I. Chanda, P.E.
Product Control Examiner
NOA No. 15-0409.10
Expiration Date: November 25, 2020
Approval Date: November 25, 2015

DESIGN SEQUENCE

STEP 1:DETERMINE SITE SPECIFIC WIND LOADING REQUIREMENTS AS PER ASCE-07
STEP 2:SEE SHEET 2 FOR DESIGN LOAD CAPACITY BASED ON DESIRED PANEL SIZE.
STEP 3:SEE SHEET 3 FOR HEAD & SILL ANCHOR CONFIGURATIONS WITH DESIGN RATING GREATER THAN LOADS REQUIRED.
STEP 4: LOWER DESIGN PRESSURES FROM STEPS 2 & 3 WILL APPLY TO ENTIRE SYSTEM.

PANEL WIDTH= NOM. PANEL

PANEL HEIGHT= FRAME HEIGHT- 1 $\frac{1}{2}$"

DLO HEIGTH= FRAME HEIGHT-6"

DLO WIDTH= NOM. PANEL WIDTH-6"

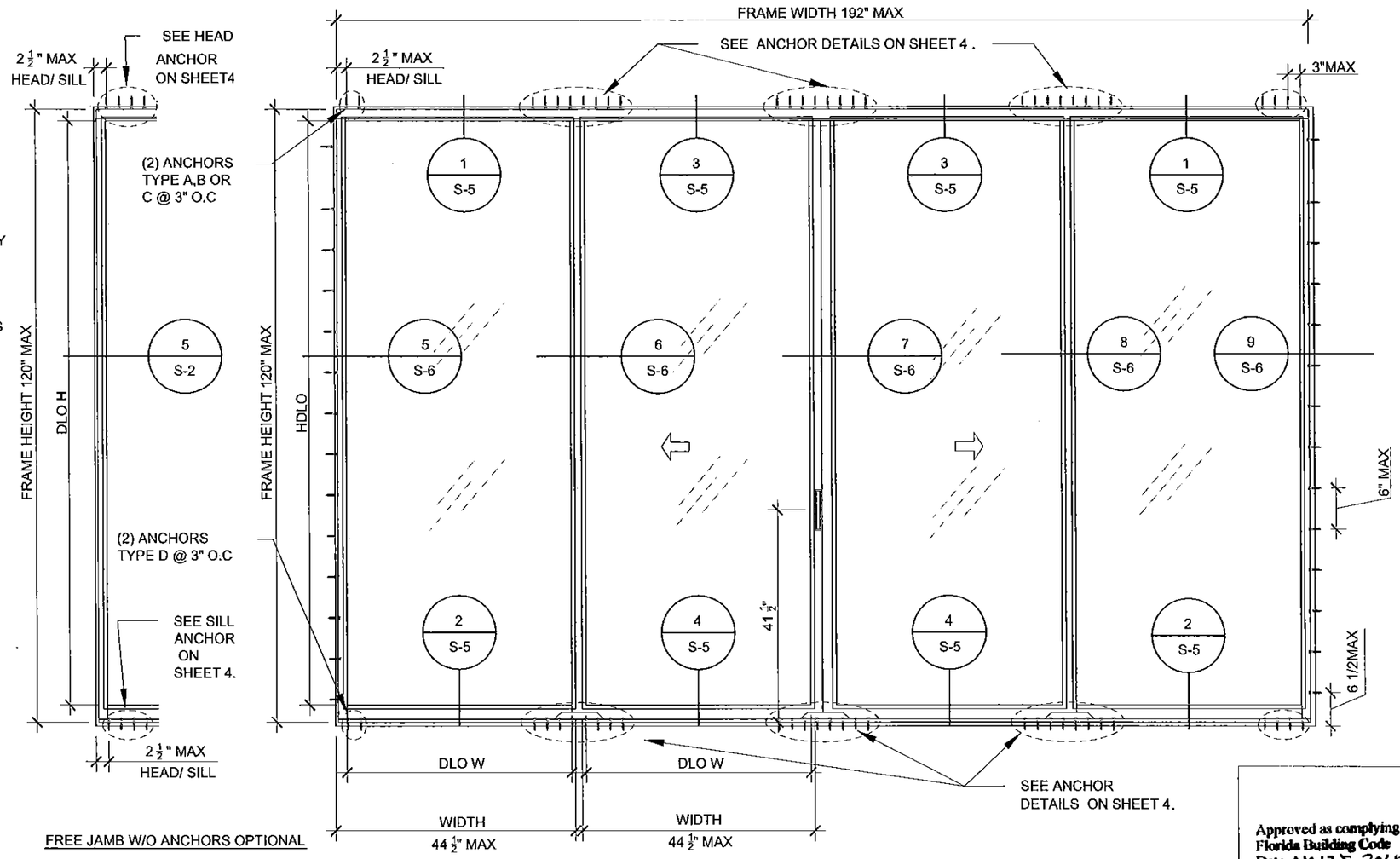

TYPICAL ELEVATION SGD (OXXO)

SCALE: 1/2"=1'-0"

GENERAL NOTES

- THIS WINDOWS SYSTEM IS DESIGNED AND TESTED TO COMPLY W/ THE REQUIREMENTS OF THE FLORIDA BUILDING CODE INCLUDING HIGH VELOCITY HURRICANE ZONE VELOCITY (HVHZ) AND ASTM 1300-09 THESE WINDOWS ARE RATE FOR SMALL MISSILE IMPACT. (SHUTTERS ARE NOT REQUIRED FOR INSTALLATION ABOVE 30FT FROM GRADE)
- ANCHORS SHOWN IN DRAWINGS ARE AS PER TEST UNITS. ANCHORS ON ALL PANEL SIZES ARE NOT TO EXCEED THESE MAXIMUM SPACING ON CENTER (O.C.) AND AS TABULATED ON SHEET 3 & 4.
- ANCHOR CONDITIONS NOT DESCRIBED IN THESE DRAWING'S ARE TO BE ENGINEERED ON A SITE SPECIFIC BASIS, UNDER A SEPARATE APPROVAL AND TO BE REVIEWED BY BUILDING OFFICIAL FOR NON-HVHZ. FOR HVHZ ONE-TIME APPROVAL REQUIRED FOR MIAMI-DADECOUNTY(PRODUCT CONTROL SECTIONS)
- LOAD DURATION INCREASE IN ALLOWABLE STRESS IS USED IN DESIGN OF ANCHORS INTO WOOD ONLY.
- ANCHORS EMBEDMENT TO BASE MATERIAL SHALL BE BEYOND WALL DRESSING OR STUCCO.
- ALL METAL/STEEL IN CONTACT WITH ALUMINUM OR OTHER DISSIMILAR MATERIALS TO BE PAINTED OR PLATED AND SHALL MEET THE FLORIDA BLDG. CODE.
- USE RATING GREATER THAN DESIGN LOADS REQUIRED
- FRAME AREA OF ALTERNATE SIZES MUST NOT EXCEED THE TESTED AREA OF 160 SF.
- EXISTING STRUCTURE TO SUPPORT THE LOADS IMPOSED BY THE SLIDING DOOR SYSTEM. ENGINEER ON RECORD OF THE BUILDING SHALL VERIFY THE STRUCTURE FOR SUCH LOADINGS
- DOOR MUST COMPLY W/ EGRESS REQUIREMENTS AS APPLICABLE PER FBC.

Approved as complying with the Florida Building Code
Date Nov 25, 2015
NOA# 15-0409.10
Miami Dade Product Control
By

GONZALO A. PAZ LICENSE No 60734 STATE OF FLORIDA PROFESSIONAL ENGINEER

11/18/2015

EASTERN ENGINEERING GROUP
3401 NW 82 AVE SUITE 370 Miami, Florida 33122
Tel. (305) 599-8133 Fax. (305) 599-8076
www.easterneg.com
☐ RAISSA R. LOPEZ, PE (Lic No-59399)
☐ GONZALO A. PAZ, PE (Lic No-60734)
CERT. OF AUTHORIZATION No. 26655

REVISIONS

No.	DATE	DESCRIPTION
REV2	10/21/2015	CITY COMMENTES

Drawing NO. 14 405
DESIGNED & DRAWN: EC_M
SCALE : AS SHOWN

Product: SERIES CS240 ALUM. SLD. GLASS DOOR (S.M.I.)

RC HOME SHOWCASE ALUMINUM WINDOWS AND DOORS
16115 NW 52nd Ave. Miami Gardens, FL 33014
Phone: (305) 392 - 6214
Fax: (305) 260 - 6432

DESIGN LOAD CAPACITY (PSF)					
NOMINAL DIMENSIONS		GLASS TYPE "A" 9/16" HS LAM.		GLASS TYPE "B" 9/16" HS LAM.	
NOMINAL WIDTH INCHES	FRAME HEIGHT INCHES	EXT(-)	INT(+)	EXT(-)	INT(+)
30	96	131.0	131.0	120.0	120.0
36		131.0	131.0	120.0	120.0
42		131.0	131.0	120.0	120.0
48		131.0	131.0	120.0	120.0
54		72.7	72.7	66.6	66.6
60		42.9	42.9	----	----
30	102	131.0	131.0	120.0	120.0
36		131.0	131.0	120.0	120.0
42		131.0	131.0	120.0	120.0
48		131.0	131.0	120.0	120.0
54		72.7	72.7	----	----
30	108	131.0	131.0	120.0	120.0
36		131.0	131.0	120.0	120.0
42		131.0	131.0	120.0	120.0
48		131.0	131.0	120.0	120.0
53		79.8	79.8	----	----
30	114	131.0	131.0	120.0	120.0
36		131.0	131.0	120.0	120.0
42		131.0	131.0	120.0	120.0
48		131.0	131.0	120.0	120.0
30	120	131.0	131.0	----	----
36		131.0	131.0	----	----
42		131.0	131.0	----	----
48		131.0	131.0	----	----

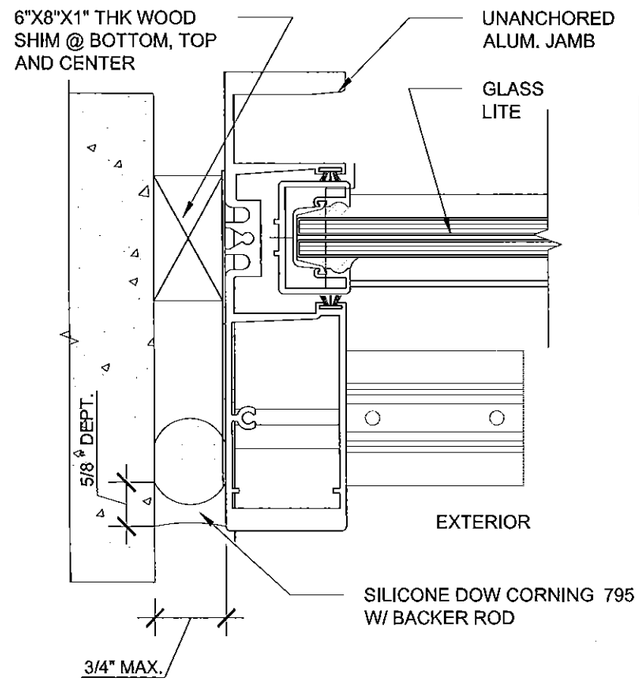

GAP DIMENSIONS

3/8" MIN FOR UP TO 8'-0" HIGH FRAME
1/2" MIN FOR UP TO 9'-0" HIGH FRAME
5/8" MIN FOR UP TO 10'-0" HIGH FRAME
3/4" MAX

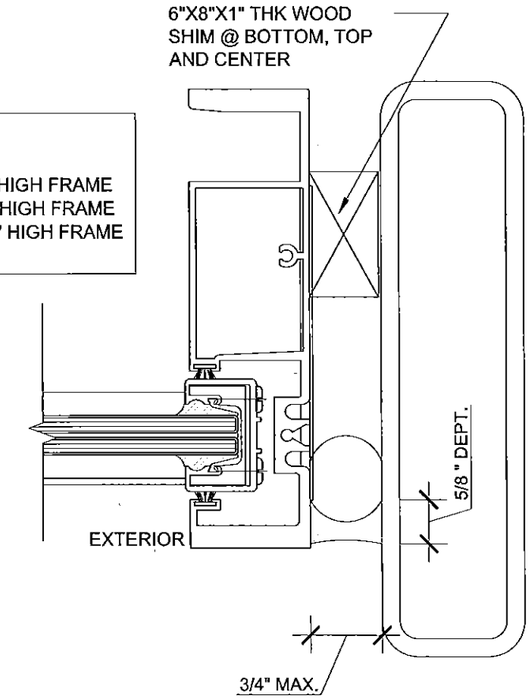

FREE JAMB &SILICONE TYPICAL DETAIL

SCALE: 6"=1'-0"

5 / S-2

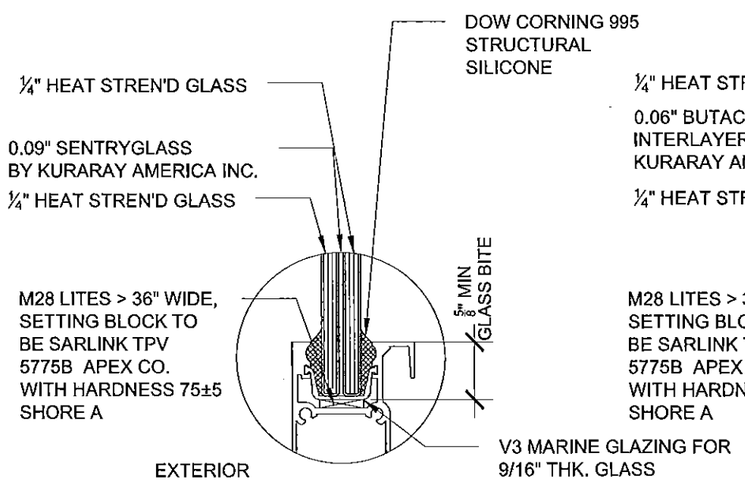

GLASS TYPE "A" DETAIL

SCALE: 6"=1'-0"

5 / S-2

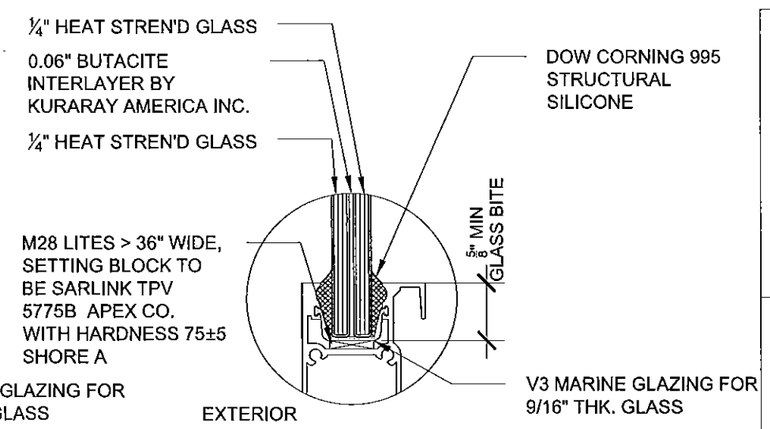

GLASS TYPE "B" DETAIL

SCALE: 6"=1'-0"

Approved as complying with the Florida Building Code
Date 11/25/15
NOA# 15-0409.10
Miami Dade Product Control
By Ishag J. Ghanle

GONZALO A. PAZ LICENSE No 60734 STATE OF FLORIDA PROFESSIONAL ENGINEER

11/18/2015

EASTERN ENGINEERING GROUP
3401 NW 82 AVE SUITE 370 Miami, Florida 33122
Tel. (305) 599-8133 Fax. (305) 599-8076
www.easternegg.com
☐ RAISSA R. LOPEZ, PE (Lic No-59399)
☐ GONZALO A. PAZ, PE (Lic No-60734)
CERT. OF AUTHORIZATION No. 26655

REVISIONS

No.	DATE	DESCRIPTION

Drawing NO. 14 405
DESIGNED & DRAWN: EC_JM
SCALE : AS SHOWN

SERIES CS240 ALUM. SLD. GLASS DOOR (S.M.I.)

Product: RC HOME SHOWCASE ALUMINUM WINDOWS AND DOORS
18115 NW 52nd Ave. Miami Gardens, FL 33014
Phone: (305) 392 - 6214
Fax: (305) 260 - 6432

DESIGN LOAD CAPACITY OF HEAD ANCHORS (PSF)

ANCHOR TYPE				A (CONCRETE)			B (WOOD BUCK)				C (METAL)		
SHIM WIDTH (in)				≤1/4			≤ 1/4				≤ 1/4		
ANCHORS @ FREE STANDING JAMB				2	3	4	2	3	4	5	2	3	4
ANCHORS @ MEETING STILE/ INTERLOCK				4	6	8	4	6	8	10	4	6	8
FRAME WIDTH (in)	30	FRAME HEIGHT (in)	96	131	131	131	115	131	131	131	131	131	131
	36			122	131	131	96	131	131	131	131	131	131
	42			105	131	131	82	123	131	131	113	131	131
	48			92	131	131	72	108	131	131	99	131	131
	54			72.7	72.7	72.7	64	72.7	72.7	72.7	72.7	72.7	72.7
	60			42.9	42.9	42.9	42.9	42.9	42.9	42.9	42.9	42.9	42.9
	30		102	131	131	131	108	131	131	131	131	131	131
	36			115	131	131	90	131	131	131	124	131	131
	42			99	131	131	77	116	131	131	106	131	131
	48			86	130	131	68	101	131	131	93	131	131
	54			72.7	72.7	72.7	60	72.7	72.7	72.7	72.7	72.7	72.7
	30		108	130	131	131	102	131	131	131	131	131	131
	36			109	131	131	85	128	131	131	117	131	131
	42			93	131	131	73	109	131	131	100	131	131
	48			82	122	131	64	96	128	131	88	131	131
	53			74	79.8	79.8	58	79.8	79.8	79.8	79	79.8	79.8
	30		114	124	131	131	97	131	131	131	131	131	131
	36			103	131	131	81	121	131	131	111	131	131
	42			88	131	131	69	104	131	131	95	131	131
	48			77	116	131	60	91	121	131	83	125	131
	30		120	117	131	131	92	131	131	131	126	131	131
	36			98	131	131	77	115	131	131	105	131	131
	42			84	126	131	66	98	131	131	90	131	131
	48			73	110	131	57	86	115	131	79	119	131

NOTE:

- 1BY OR 2BY WOOD BUCKS AND METAL STRUCTURES NOT BY RC HOME SHOWCASE MUST SUPPORT LOADS IMPOSED BY GLAZING SYSTEM TRANSFER THEM TO THE BUILDING STRUCTURE.
- ALL JOINTS AND FRAME CONNECTIONS SEALED WITH DOW CORNING 795 SEALANT
- METAL STRUCTURE OR M-D COUNTY APPROVED MULLION MIN THICKNESS ARE FOLLOWS

@ HEAD: 1/8" MIN STEEL OR ALUMINUM (6063-T6) UP TO 1/4" MAX SHIM.

@ JAMB: 1/4" MIN ALUMINUM (6063-T6) OR 3/16" MIN STEEL FOR SHIM UP TO 9/16"
1/8" MIN STEEL OR ALUMINUM (6063-T6) UP TO 1/4" MAX SHIM.

DESIGN LOAD CAPACITY OF SILL ANCHORS (PSF)

ANCHOR TYPE			D (CONCRETE)			
SHIM WIDTH (in)			≤ 1/4			
ANCHORS @ FREE STANDING JAMB			2	2	3	4
ANCHORS @ MEETING STILE/ INTERLOCK			2	4	6	8
FRAME WIDTH (in)	30	FRAME HEIGHT (in) 96	73	131	131	131
	36		61	122	131	131
	42		52	105	131	131
	48		46	92	131	131
	54		41	72.7	72.7	72.7
	60		37	42.9	42.9	42.9
	30	102	69	131	131	131
	36		58	115	131	131
	42		49	99	131	131
	48		43	86	130	131
	54		38	72.7	72.7	72.7
	30	108	65	130	131	131
	36		54	109	131	131
	42		47	93	131	131
	48		41	82	122	131
	53		37	74	79.8	79.8
	30	114	62	124	131	131
	36		52	103	131	131
	42		44	88	131	131
	48		39	77	116	131
	30	120	59	117	131	131
	36		49	98	131	131
	42		42	84	126	131
	48		37	73	110	131

Approved as complying with the Florida Building Code
Date 11/25/15
NOA# 15-0409.10
Miami Dade Product Control
By

EASTERN ENGINEERING GROUP
3401 NW 82 AVE SUITE 370 Miami, Florida 33122
Tel. (305) 599-8133 Fax: (305) 599-8076
www.easterneg.com
☐ RAISSA R. LOPEZ, PE (Lic No-59399)
☐ GONZALO A. PAZ, PE (Lic No-60734)
CERT. OF AUTHORIZATION No. 26655

REVISIONS

No.	DATE	DESCRIPTION
REV2	10/21/2015	CITY COMMENTES

Drawing NO. 14 405
DESIGNED & DRAWN: EC_JM
SCALE : AS SHOWN

Product: SERIES CS240 ALUM. SLD. GLASS DOOR (S.M.I.)

RC HOME SHOWCASE ALUMINUM WINDOWS AND DOORS
16115 NW 52nd Ave.
Miami Gardens, FL 33014
Phone: (305) 392 - 6214
Fax: (305) 260 - 6432

GONZALO A. PAZ LICENSE No 60734 STATE OF FLORIDA PROFESSIONAL ENGINEER
11/18/2015

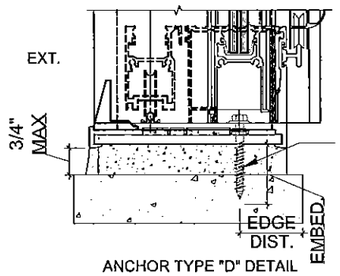

ANCHOR TYPE "D" DETAIL
INTO CONCRETE

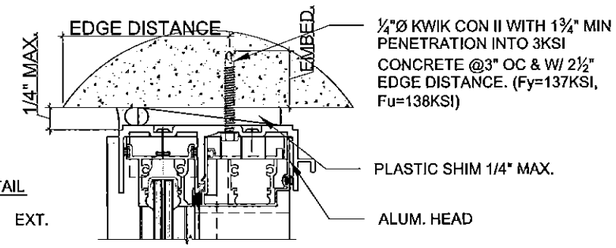

HEAD
ANCHOR TYPE "A" DETAIL

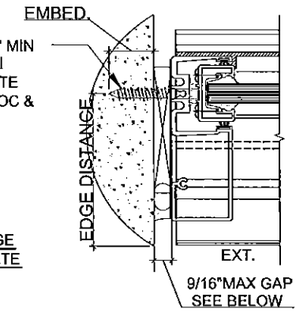

FIXED JAMB ANCHORAGE
CONN. TO CMU/CONCRETE

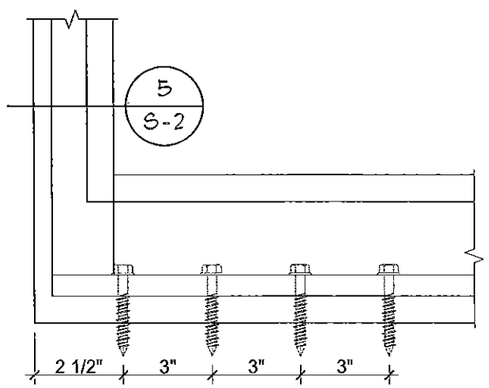

ANCHOR SPACING AT HEAD & SILL FIXED JAMB
(4-ANCHOR SCHEDULE SHOWN, SEE SHEET 3)

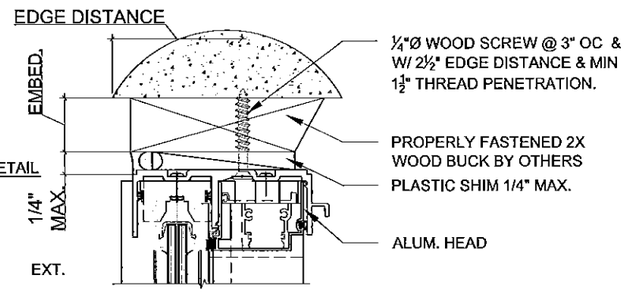

HEAD
ANCHOR TYPE "B" DETAIL

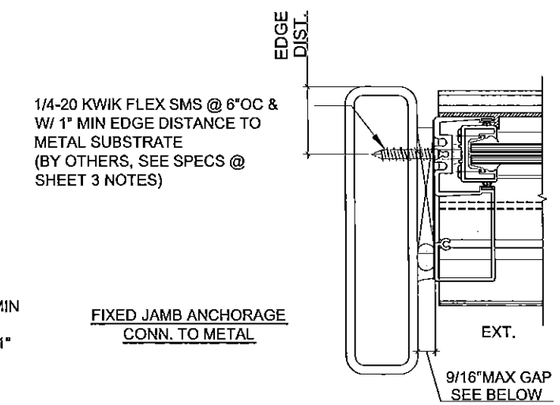

FIXED JAMB ANCHORAGE
CONN. TO METAL

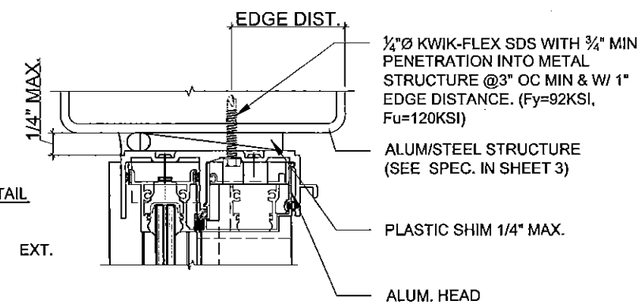

HEAD
ANCHOR TYPE "C" DETAIL

TYPICAL ANCHORS DETAILS
SCALE: 3"=1'-0"

GAP NOTES
3/8" MIN. UP TO 8'
1/2" MIN UP TO 9'
9/16" UP TO 10'

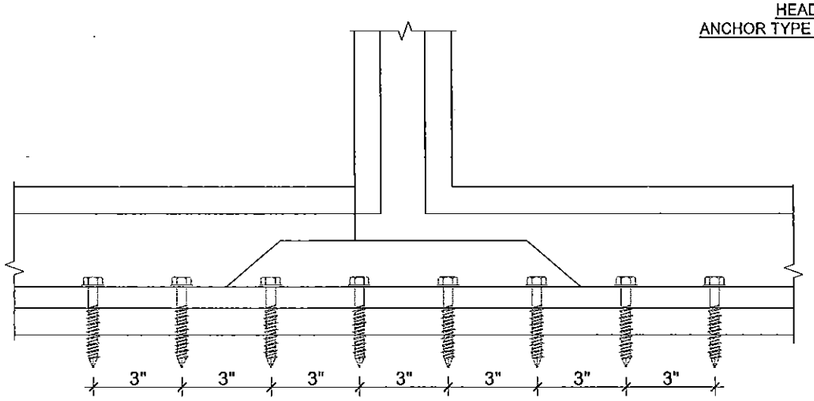

ANCHOR SPACING AT HEAD & SILL INTERLOCK/ STRAGAL
(8-ANCHOR SCHEDULE SHOWN, SEE SHEET 3)

ANCHOR TYPES	
ANCHOR TYPE	ANCHOR DESCRIPTION
A	1/4"Ø KWIK CON II WITH 1 3/4" MIN PENETRATION INTO 3KSI CONCRETE OR BETTER. SPACED AT 3" OC AND WITH 2.5" EDGE DISTANCE. (FY=137KSI, FU=138KSI)
B	1/4"Ø WOOD SCREW @ 3" OC & W/ 21/2" EDGE DISTANCE & MIN 11/2" THREAD PENETRATION. (FY=137KSI, FU=138KSI)
C	1/4" Ø KWIK-FLEX GRADE 5 S.D.S. WITH 3/4" MIN PENETRATION INTO METAL STRUCTURE (1/8" MIN THICKNESS). SPACED AT 3" OC MINIMUM AND WITH 1" EDGE DISTANCE. (FY=92KSI, FU=120KSI)
D	1/4"Ø KWIK CON II WITH 1 3/4" MIN PENETRATION INTO 3KSI CONCRETE OR BETTER. SPACED AT MINIMUM 3" OC AND WITH 2.5" EDGE DISTANCE. (FY=137KSI, FU=138KSI)

Approved as complying with the Florida Building Code
Date 11/25/15
NOA# 15-0409.10
Miami Dade Product Control
By Ishag Lillanda

EASTERN ENGINEERING GROUP
3401 NW 82 AVE SUITE 370 Miami, Florida 33122
Tel. (305) 599-8133 Fax. (305) 599-9076
www.easterneg.com
☐ RAISSA R. LOPEZ, PE (Lic No-59399)
☐ GONZALO A. PAZ, PE (Lic No-60734)
CERT. OF AUTHORIZATION No. 26655

REVISIONS

No.	DATE	DESCRIPTION

Drawing NO. 14 405
DESIGNED & DRAWN: EC_M
SCALE : AS SHOWN

Product: SERIES CS240 ALUM. SLD. GLASS DOOR (S.M.L.)

RC HOME SHOWCASE ALUMINUM WINDOWS AND DOORS
16115 NW 52nd Ave.
Miami Gardens, FL 33014
Phone: (305) 392 - 6214
Fax: (305) 260 - 6432

GONZALO A. PAZ LICENSE No 60734 STATE OF FLORIDA PROFESSIONAL ENGINEER
11/18/2015

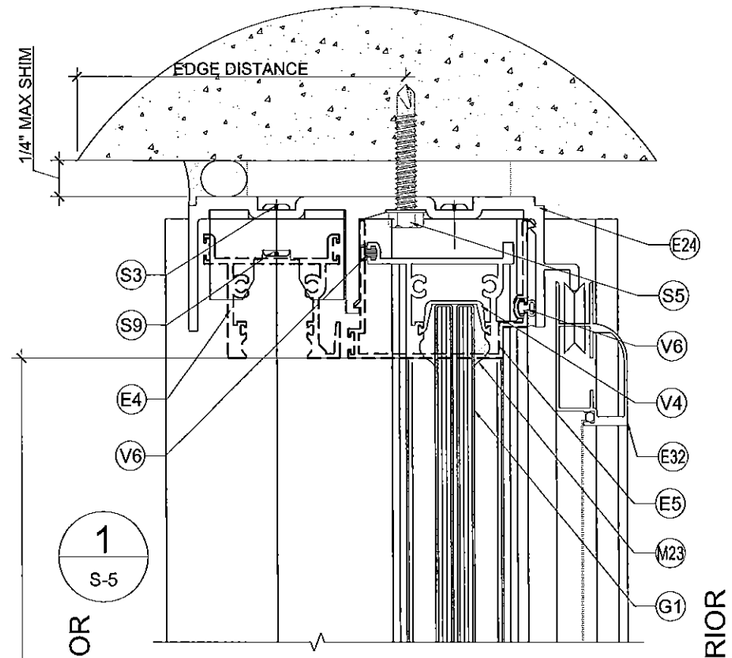

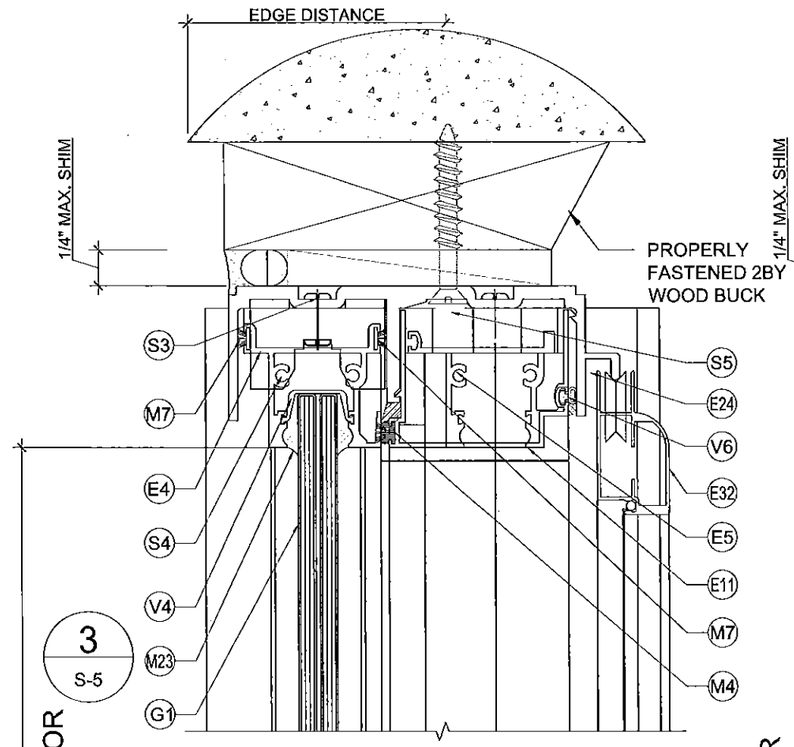

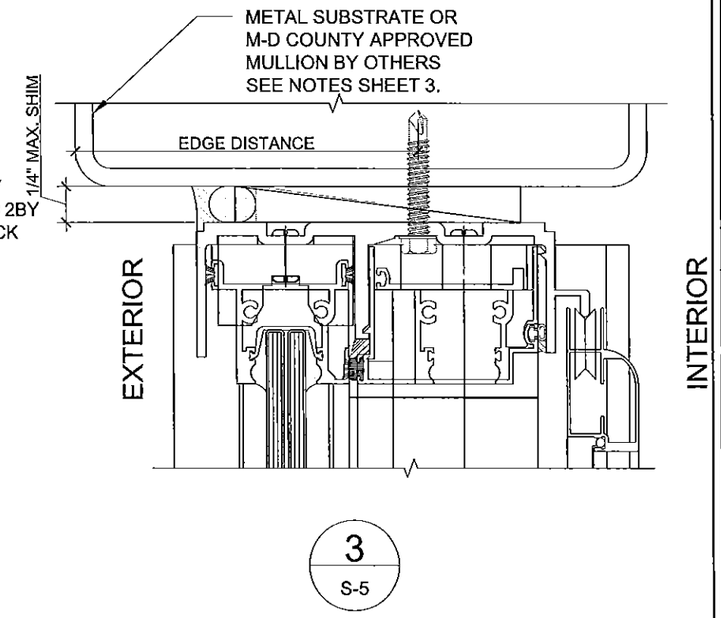

PROPERLY FASTENED 2BY WOOD BUCKS AND METAL STRUCTURES NOT BY RC HOME SHOWCASE MUST SUPPORT LOADS IMPOSED BY GLAZING SYSTEM TRANSFER THEM TO THE BUILDING STRUCTURE.

CONCRETE AT HEAD, SILL OR JAMBS 3KSI MIN.
GROUT FILLED C90 BLOCK AT JAMB MIN

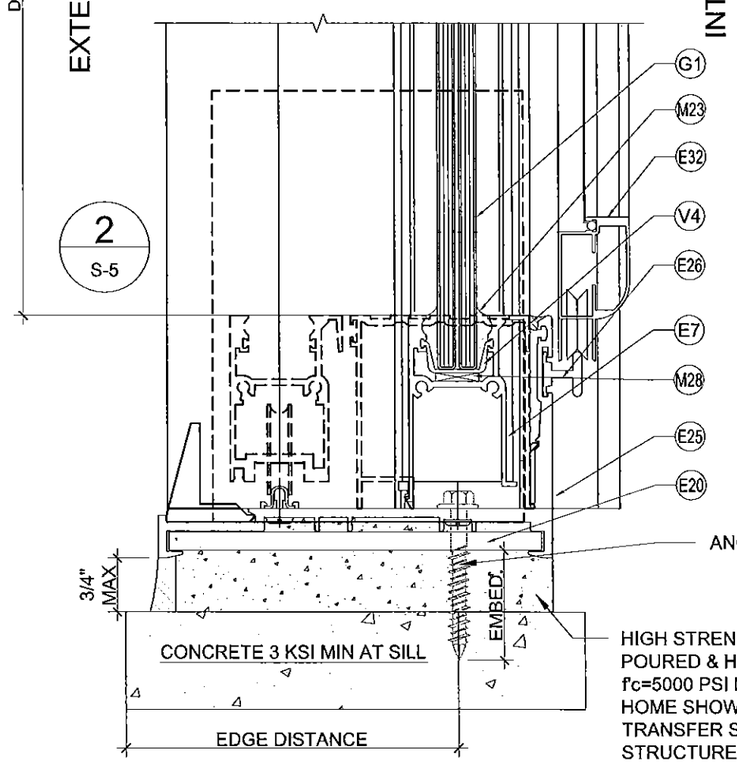

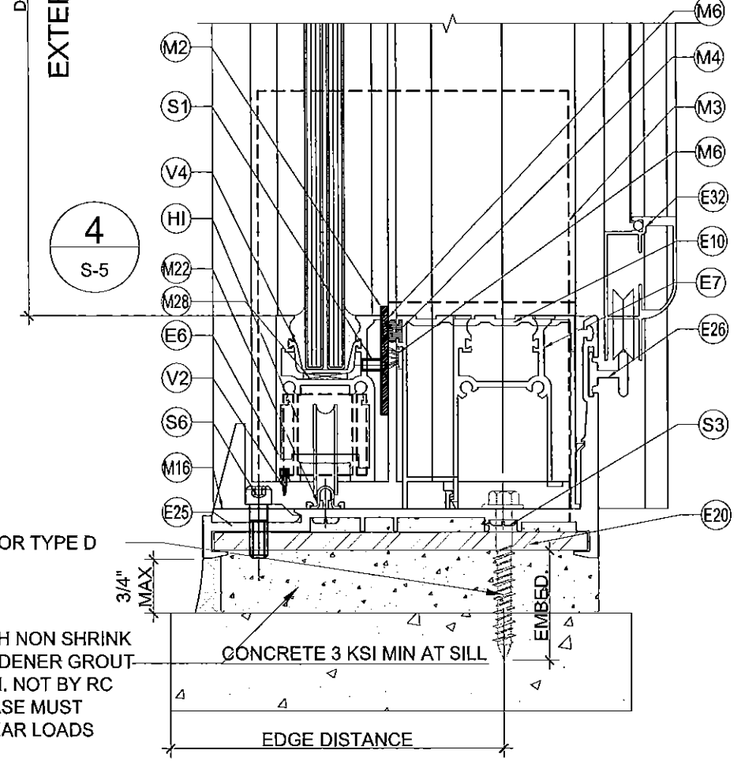

TYPICAL SECTIONS

SCALE: 6"=1'-0"

Approved as complying with the Florida Building Code
Date NOV 25, 2015
NOA# 15-0409.10
Miami Dade Product Control
By Ishaq I. Chanda

EASTERN ENGINEERING GROUP
3401 NW 82 AVE SUITE 370 Miami, Florida 33122
Tel. (305) 599-8133 Fax: (305) 599-8076
www.easterneg.com
☐ RAISSA R. LOPEZ, PE (Lic No-59399)
☐ GONZALO A. PAZ, PE (Lic No-60734)
CERT. OF AUTHORIZATION No. 26655

REVISIONS

No.	DATE	DESCRIPTION

Drawing NO. 14 405
DESIGNED & DRAWN: EC_JM
SCALE : AS SHOWN

Product: SERIES CS240 ALUM. SLD. GLASS DOOR (S.M.I.)

RC HOME SHOWCASE
ALUMINUM WINDOWS AND DOORS
16115 NW 52nd Ave.
Miami Gardens, FL 33014
Phone: (305) 392 - 6214
Fax: (305) 260 - 6432

GONZALO A. PAZ LICENSE No 60734 STATE OF FLORIDA PROFESSIONAL ENGINEER
11/18/2015

SHEET 5 OF 11

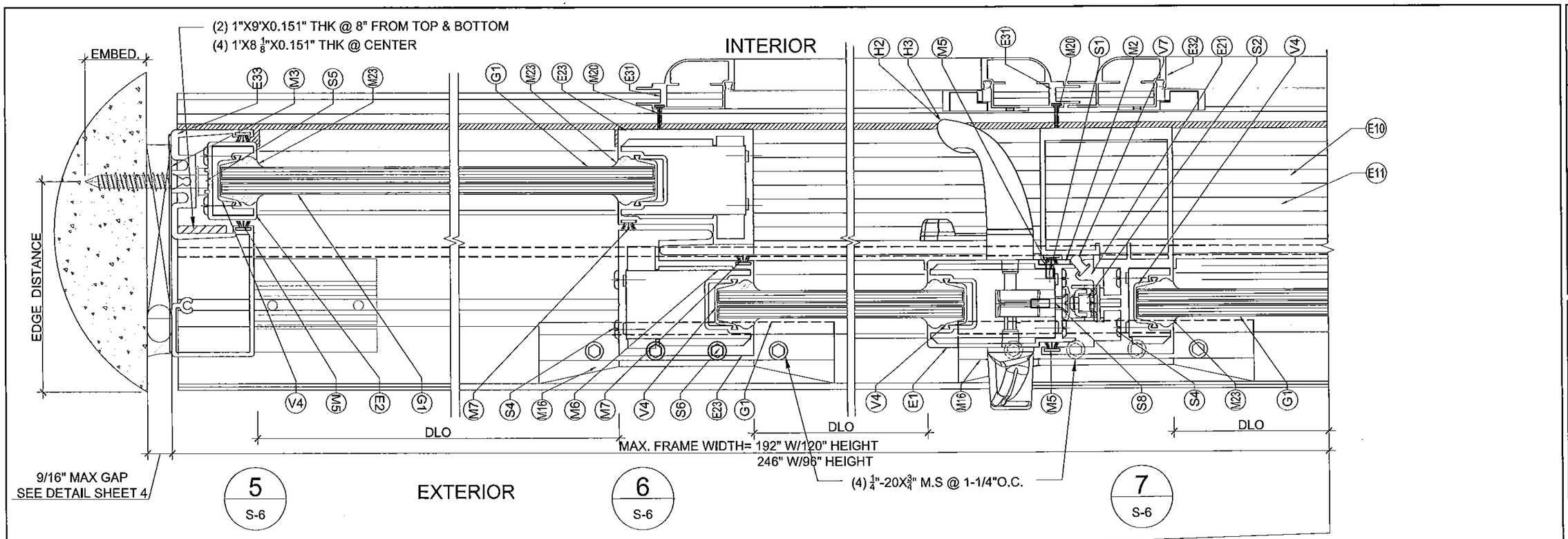

HORIZONTAL SECTION SGD(OXXO)

SCALE: 6"=1'-0"

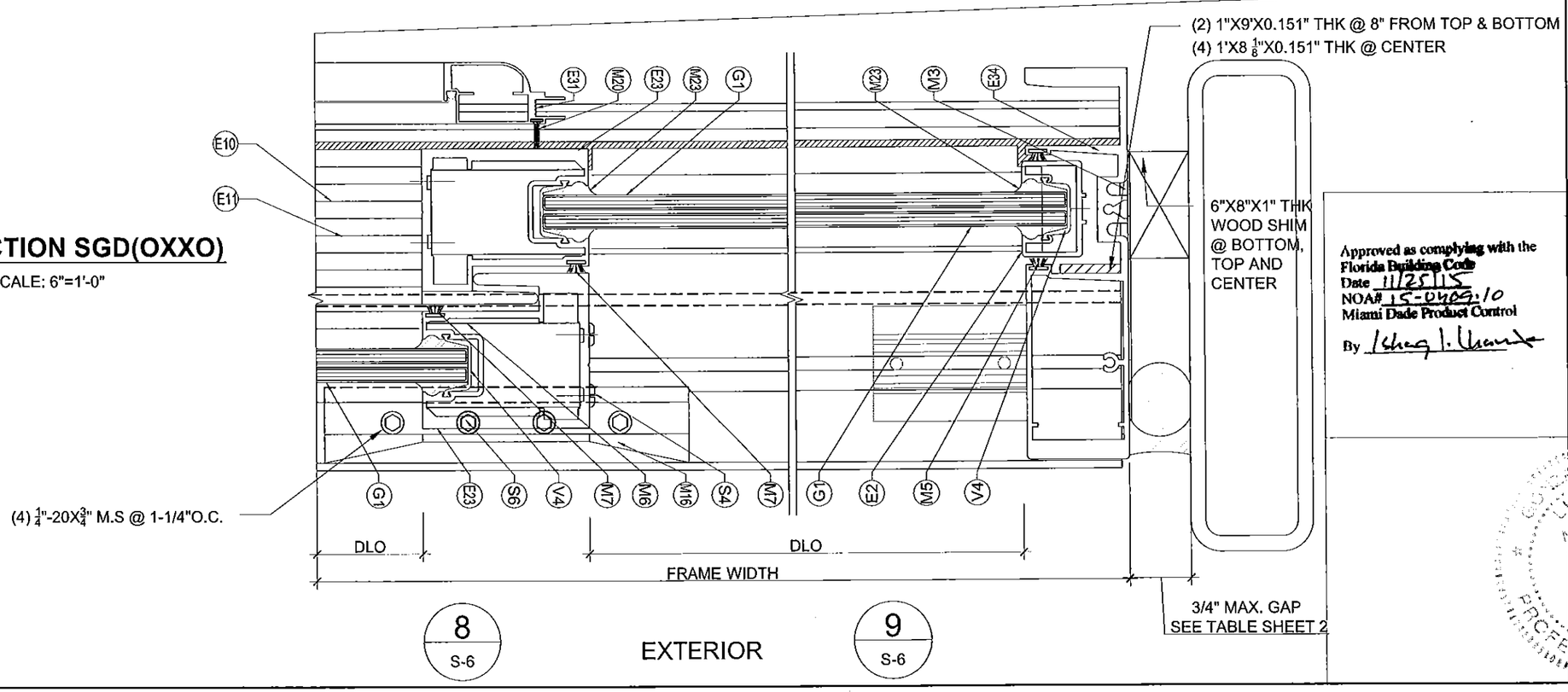

Approved as complying with the Florida Building Code
Date 11/25/15
NOA# 15-0409.10
Miami Dade Product Control
By

EASTERN ENGINEERING GROUP
3401 NW 82 AVE SUITE 370 Miami, Florida 33122
Tel: (305) 599-8133 Fax: (305) 599-8076
www.easternegg.com
☐ RAISSA R. LOPEZ, PE (Lic No-59399)
☐ GONZALO A. PAZ, PE (Lic No-60734)
CERT. OF AUTHORIZATION No. 26635

REVISIONS

No.	DATE	DESCRIPTION

Drawing NO. 14 405

DESIGNED & DRAWN: EC_JM

SCALE : AS SHOWN

Product: SERIES CS240 ALUM. SLD. GLASS DOOR (S.M.I.)

RC HOME SHOWCASE ALUMINUM WINDOWS AND DOORS
16115 NW 52nd Ave.
Miami Gardens, FL 33014
Phone: (305) 392 - 6214
Fax: (305) 260 - 6432

GONZALO A. PAZ LICENSE 60734 STATE OF FLORIDA PROFESSIONAL ENGINEER
11/18/2015

SHEET: 8 OF 17

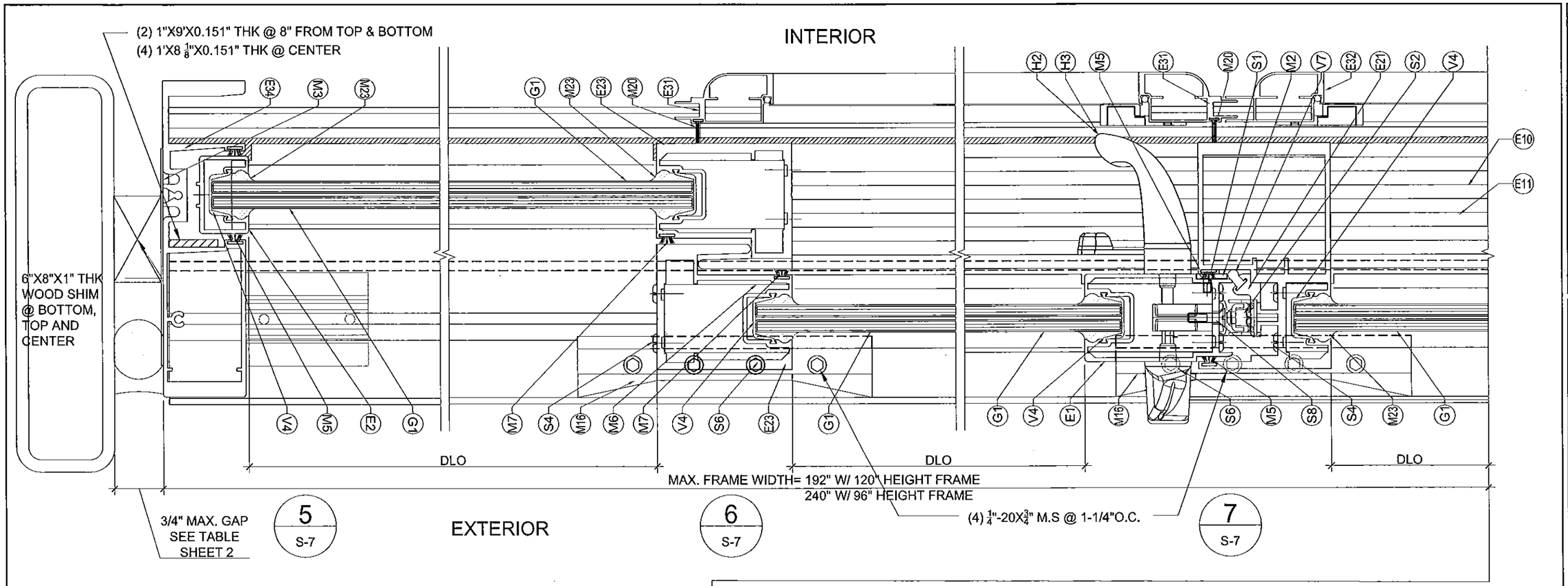

HORIZONTAL SECTION SGD(OXO)

SCALE: 6"=1'-0"

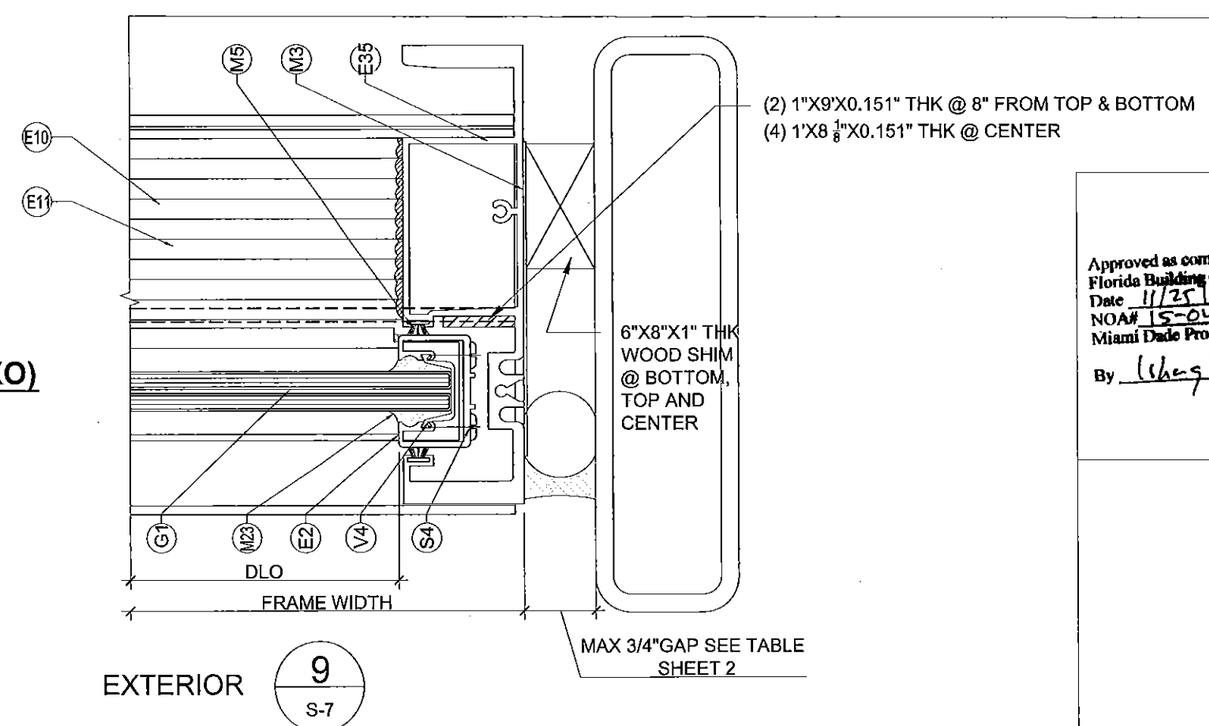

Approved as complying with the Florida Building Code
Date 11/25/15
NOA# 15-0409.10
Miami Dade Product Control
By

EASTERN ENGINEERING GROUP
3401 NW 82 AVE SUITE 370 Miami, Florida 33122
Tel. (305) 599-8133 Fax. (305) 599-8076
www.easternegg.com
☐ RAISSA R. LOPEZ, PE (Lic No-59399)
☐ GONZALO A. PAZ, PE (Lic No-60734)
CERT. OF AUTHORIZATION No. 26655

REVISIONS

No.	DATE	DESCRIPTION

Drawing NO. 14 405
DESIGNED & DRAWN: EC_JM
SCALE : AS SHOWN

Product: SERIES CS240 ALUM. SLD. GLASS DOOR (S.M.I.)

RC HOME SHOWCASE ALUMINUM WINDOWS AND DOORS
16115 NW 52nd Ave.
Miami Gardens, FL 33014
Phone: (305) 392 - 6214
Fax: (305) 280 - 6432

GONZALO A. PAZ LICENSE No 60734 STATE OF FLORIDA PROFESSIONAL ENGINEER
11/18/2015

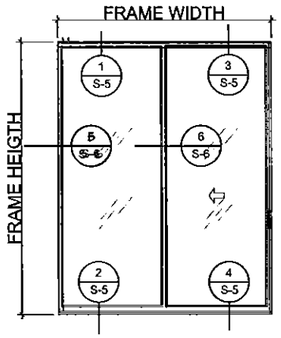

S.G.D OX

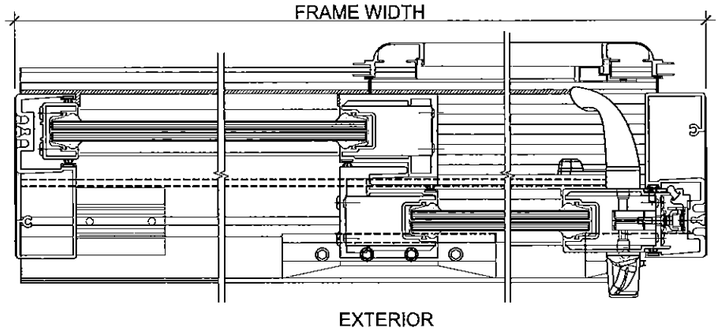

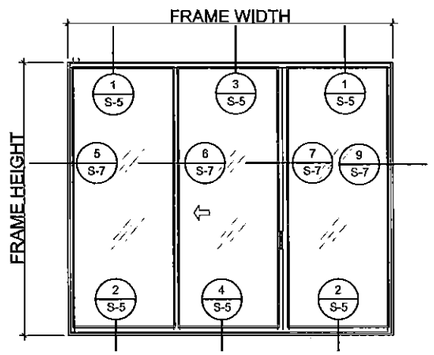

S.G.D OXO

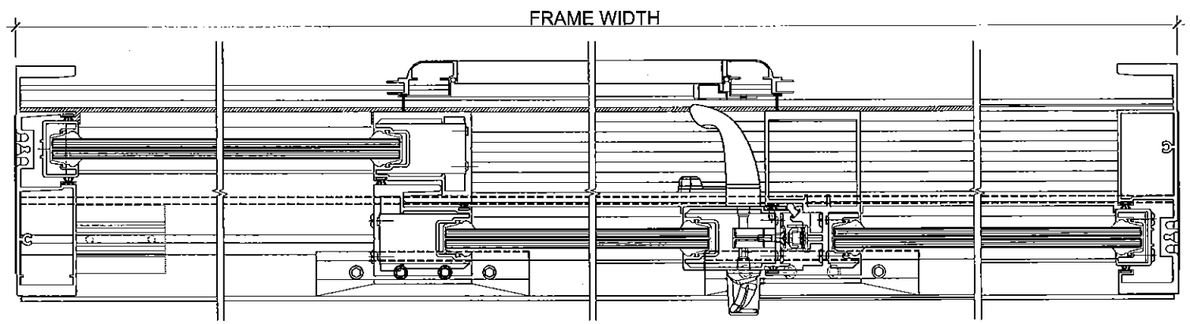

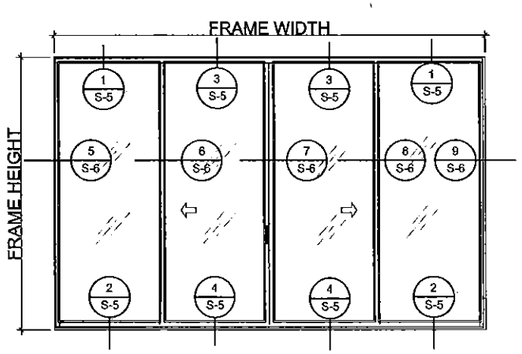

SGD (OXXO) (MAX 4 PANEL CONFIGURATION)

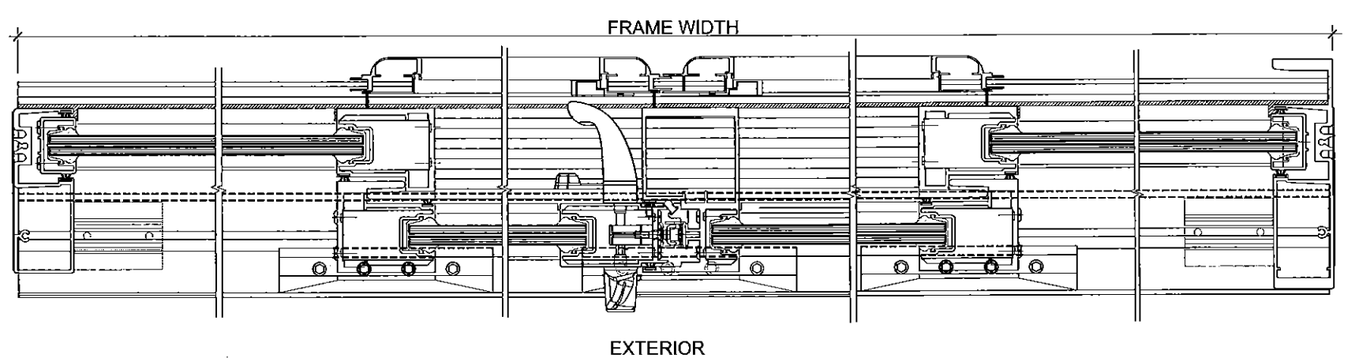

CONFIGURATION OPTIONS

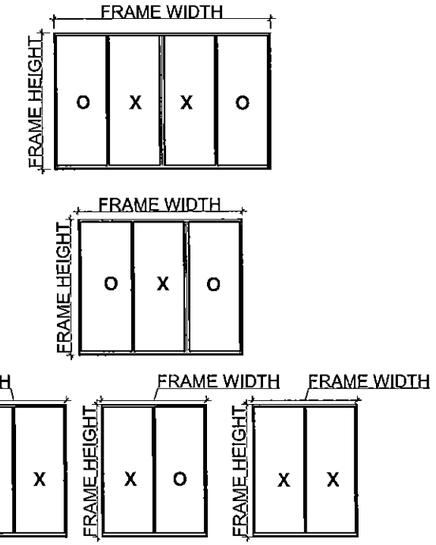

ILLUSTRATION PURPOSES ONLY.
SEE ILLUSTRATION AT SHEETS
4-7 FOR INSTALLATION

Approved as complying with the
Florida Building Code
Date 11/25/15
NOA# 15-0405.10
Miami Dade Product Control
By Ishwar Lilhandra

GONZALO A. PAZ
LICENSE
No 60734
STATE OF
FLORIDA
PROFESSIONAL ENGINEER
11/18/2015

EASTERN ENGINEERING GROUP
3401 NW 82 AVE SUITE 370 Miami, Florida 33122
Tel. (305) 599-8133 Fax. (305) 599-8076
www.easterneg.com
☐ RAISSA R. LOPEZ, PE (Lic No-59399)
☐ GONZALO A. PAZ, PE (Lic No-60734)
CERT. OF AUTHORIZATION No. 26655

REVISIONS

No.	DATE	DESCRIPTION

Drawing NO. 14 405
DESIGNED & DRAWN: EC_M
SCALE : AS SHOWN

Product: SERIES CS240 ALUM. SLD. GLASS DOOR (S.M.I.)

RC HOME SHOWCASE ALUMINUM WINDOWS AND DOORS
16115 NW 52nd Ave.
Miami Gardens, FL 33014
Phone: (305) 392 - 6214
Fax: (305) 260 - 6432

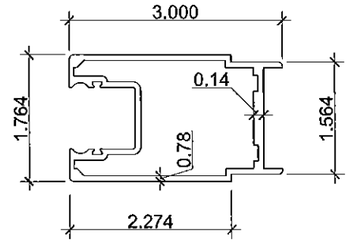

E1 LOCK STILE

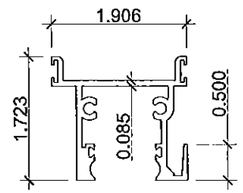

E4 MOVING TOP RAIL

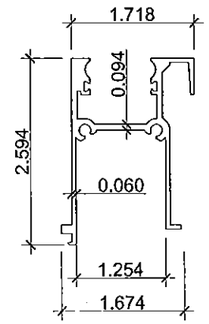

E7 FIXED BOTTOM RAIL

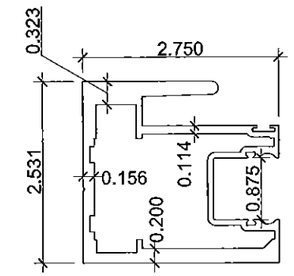

E23 INTERLOCK STILE

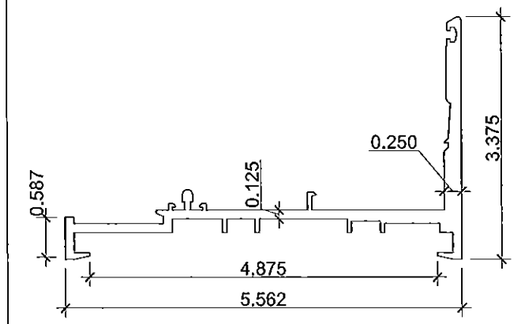

E29 SILL TRACK (WITHOUT SCREEN)

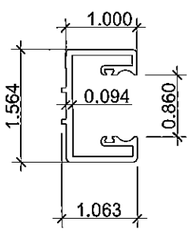

E2 FIXED JAMB STILE

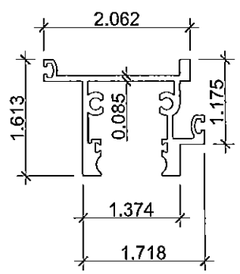

E5 FIXED TOP RAIL

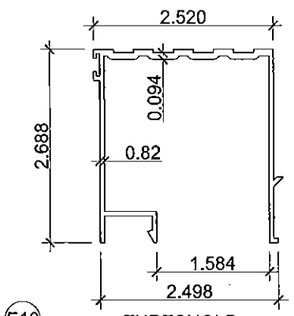

E10 THRESHOLD

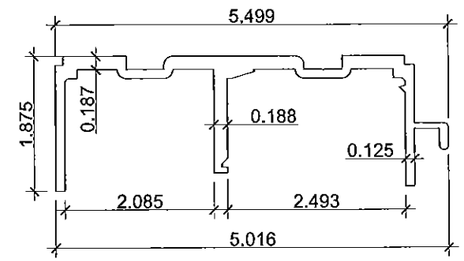

E24 FRAME HEAD

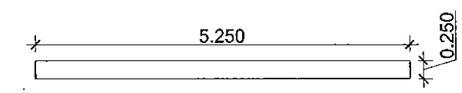

E20 SILL TRACK PLATE

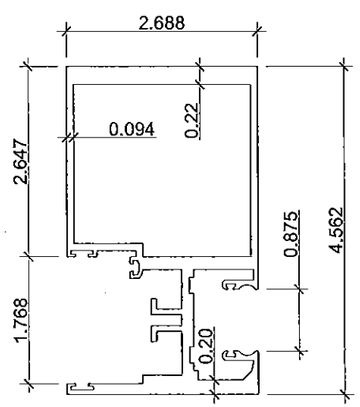

E3 MEETING STILE

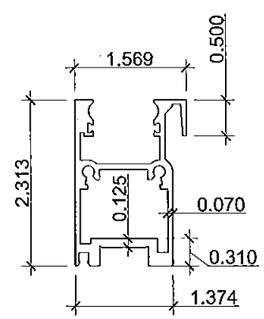

E6 MOVING BOTTOM RAIL

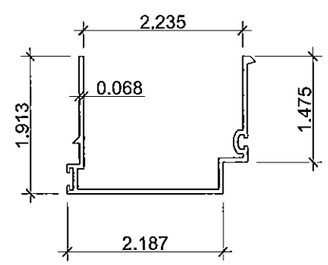

E11 HEAD ADAPTOR

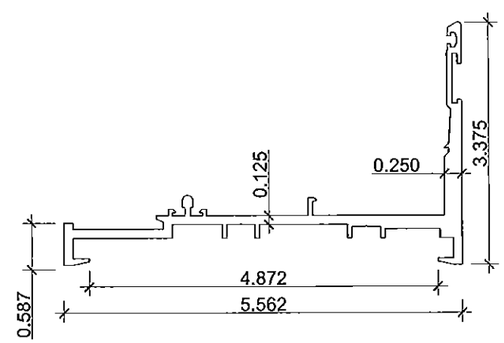

E25 SILL TRACK

Approved as complying with the
Florida Building Code
Date 11/25/15
NOA# 15-0409.10
Miami Dade Product Control
By

EASTERN ENGINEERING GROUP
3401 NW 82 AVE SUITE 370 Miami, Florida 33122
Tel. (305) 599-8133 Fax. (305) 599-6076
www.easterneg.com

☐ RAISSA R. LOPEZ, PE (Lic No-59399)
☐ GONZALO A. PAZ, PE (Lic No-60734)
CERT. OF AUTHORIZATION No. 26655

REVISIONS

No.	DATE	DESCRIPTION

Drawing NO. 14 405

DESIGNED & DRAWN: EC_JM

SCALE : AS SHOWN

Product: SERIES CS240 ALUM. SLD. GLASS DOOR (S.M.I.)

RC HOME SHOWCASE ALUMINUM WINDOWS AND DOORS
16115 NW 52nd Ave.
Miami Gardens, FL 33014
Phone: (305) 392 - 6214
Fax: (305) 260 - 6432

GONZALO A. PAZ LICENSE No 60734 STATE OF FLORIDA PROFESSIONAL ENGINEER

11/18/2015

SHEET: 9 OF 11

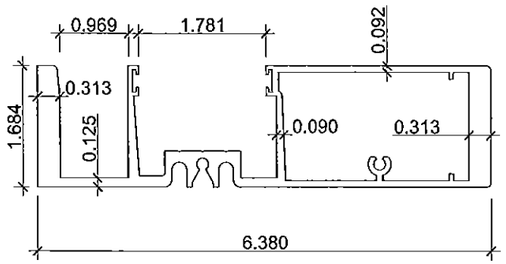

E34 FRAME JAMB FIXED SIDE

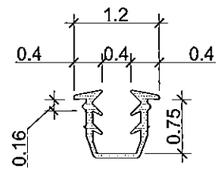

V8 GLAZING GASKET

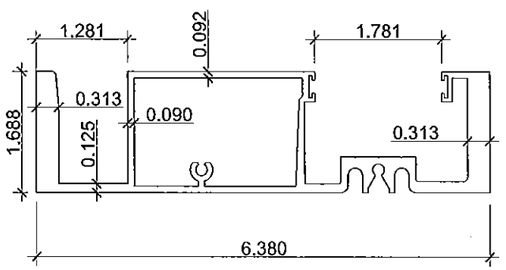

E35 FRAME JAMB OPERABLE SIDE

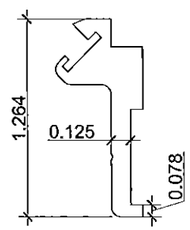

E21 TRESHOLD SEAL

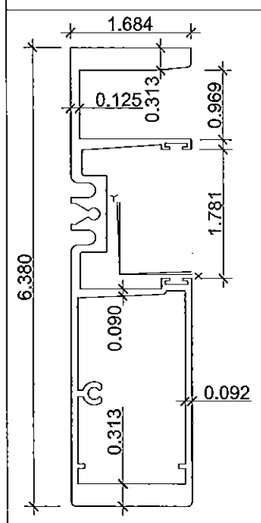

Area = 2.5171 in^2
Ixx = 13.0241 in^4
Sxx min = 4.0313 in^3

E34 FRAME JAMB FIXED SIDE

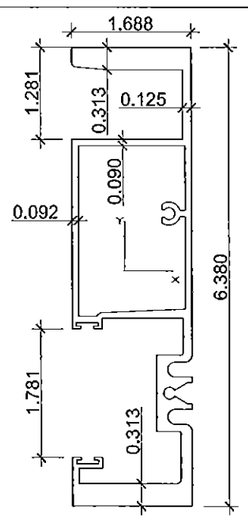

Area = 2.5270 in^2
Ixx = 13.3353 in^4
Sxx min = 4.0509 in^3

E35 FRAME JAMB OPERABLE SIDE

CODE	PART No./ MANUFACTURER	DESCRIPTION
		EXTRUSIONS
E1	CS240-002	LOCK STILE (AL.6063-T6)
E2	CS240-004	FIXED JAMB STILE (AL.6063-T6)
E3	CS240-005	MEETING STILE (AL.6063-T6)
E4	CS240-006	MOVING TOP RAIL (AL.6063-T6)
E5	CS240-007	FIXED TOP RAIL (AL.6063-T6)
E6	CS240-069	MOVING BOTTOM RAIL FOR NEW ROLLER (AL.6063-T6)
E7	CS240-009	FIXED BOTTOM RAIL (AL.6063-T6)
E10	CS240-012	THRESHOLD (AL 6063-T6)
E11	CS240-019	HEAD ADAPTOR (AL. 6063-T6)
E20	CS240-031	SILL TRACK PLATE (AL.6063-T6)
E21	2400ST-032	MEETING RAIL THRESHOLD SEAL
E23	CS240-037	INTERLOCK STILE (AL.6063-T6)
E24	CS240-038	FRAME HEAD W/INTEGRAL SCREEN TRACK (AL. 6063-T6)
E25	CS240-082	SILL TRACK (with screen) (AL.6063-T6)
E26	CS240-040	INSIDE SCREEN TRACK
E29	CS240-088	SILL TRACK (without screen)
E31	CS240-056	SCREEN VERTICAL JAMB
E32	CS240-057	SCREEN TOP & BOTTOM RAIL
E33	CS240-042	FRAME JAMB
E34	CS240-071	FRAME JAMB FIXED SIDE (UNANCHORED JAMB)
E35	CS240-072	FRAME JAMB OPERABLE SIDE (UNANCHORED JAMB)
		VINYLS
V1	V-017	MARINE GLAZING FOR 9/16" THK. GLASS LMI
V2	V-019	DRIP SILL VINYL @ (CS240-069)
V4	V-020	MARINE GLAZING FOR 9/16" THK. GLASS LMI
V7	V-027	BULB VINYL WSTP AT MEETING RAIL THRESHOLD
V8	TEKNOR APEX COMPANY	MARINE GLAZED SURROUND GASKET W/ WET SILICONE @ BOTH SIDE OF GLASS +- 75.00 SHORE A (SARLINK TPV 5765B)
		SCREWS
S1		#8 X 3/8" LG. FH. SMS. ST/ST @ 4 PANELS ONLY
S2		#10 X 1/2" LG. PH. SMS ST/ST A.S. FOR MEETING ST. THRESH.
S3		#10 X 1" LG. PH. SMS PLATED ASSEMBLY SCREW FOR FRAME
S4		#10X1 1/2" LG. PH. SMS. ST/ST ASS. SC.FOR PANELS
S5		1/4"Ø-20 X 2 1/2" LG. HD. HX. KWIK-FLEX INSTALLATION SCREWS
S6		1/4-20 X 3/4" LG. SOCKET HEAD CAP SCREW ST/ST NONMAGN.
S7		#8 X 1/2" LG. PH. SMS. ST/ST
S8		#10 X 3/4" LG. FH. SMS ST/ST FOR HARDWARE
S9		#10 X 3/4" LG. PH. SMS ST/ST SCREW @ M1
S10		1/4"Ø X 2 3/4" LG. HD. HX. KWIK-CONS. INSTALL. SCREW
		HARDWARE
H1	PR03-600	HIGH PRECISION SIDE AJUSTABLE ST/ST ROLLER STEEL PLATE WHEELS
H2	PS01-0001-XXX	2 POINT KIT N/L
H3	PS01-0002-XXX	2 POINT KIT EXTERIOR LOCKING
H4	191014	2 POINT MORTISE LOCK
		MISCELANEOUS
M1	P-046	1.250"X1.883"X4" LONG DOOR BUMPER @ (CS240-038)
M2		5/8" X 1 1/2" X 0.100 THK.ALUM.PLATE PAINTED @ CS240-002
M3		4 3/8" X 6" X 0.040 THK. ALUM. PLATE PAINTED @ CS240-042
M4	U56	Q 275 X 270 W/B @ (CS240-012) (CS240-019)
M5	W21225NK	ULTRAFAB. SERIES VERTICALLY @ (CS240-042) (CS240-005)
M6	P3802AFK	ULTRAFAB SERIES WSTP @ (CS240-037) (CS240-012)
M7	W31245NK	ULTRAFAB SERIES WSTP @ (CS240-037) & (CS240-006)
M16	PS01-5001-XXX/SLA-2400-12W	SILL ANCHOR
M19	A-4	3/4"X3/4"X1/16" THK. ALUM. TUBE 1" LONG (TEMPORARY)
M20	W14551NW	ULTRAFAB SERIES WSTP VERTICALLY @ (CS240-056)
M21	CD-690S	SCREEN CORNER LOCK AND ROLLER
M22		STAINLESS STEEL TRACK COVER 0.031 THK. @ 2400ST-082
M23	DC995	STRUCTURAL SILICONE
M28		SETTING BLOCK
		GLASS
GB	9/16"THK. LAM. GL.	1/4" H.S. OUTSIDE + 0.060 BUTACITE PVB + 1/4" H.S. INSIDE
GA	9/16"THK. LAM. GL.	1/4" H.S. OUTSIDE + 0.090 SGP + 1/4" H.S. INSIDE

Approved as complying with the Florida Building Code
Date 11/25/15
NOA# 15-0409.10
Miami Dade Product Control
By Ishay Lilbaum

GONZALO A. PAZ LICENSE No. 6073 STATE OF FLORIDA PROFESSIONAL ENGINEER
11/18/2015

EASTERN ENGINEERING GROUP
3401 NW 82 AVE SUITE 370 Miami, Florida 33122
Tel. (305) 599-8133 Fax. (305) 599-9076
www.easterneg.com
RAISSA R. LOPEZ, PE (Lic No-59399)
GONZALO A. PAZ, PE (Lic No-60734)
CERT. OF AUTHORIZATION No. 26655

REVISIONS

No.	DATE	DESCRIPTION

Drawing NO. 14 405
DESIGNED & DRAWN: EC_JM
SCALE : AS SHOWN

Product: SERIES CS240 ALUM. SLD. GLASS DOOR (S.M.I.)

RC HOME SHOWCASE ALUMINUM WINDOWS AND DOORS
16115 NW 52nd Ave.
Miami Gardens, FL 33014
Phone: (305) 392 - 6214
Fax: (305) 260 - 6432

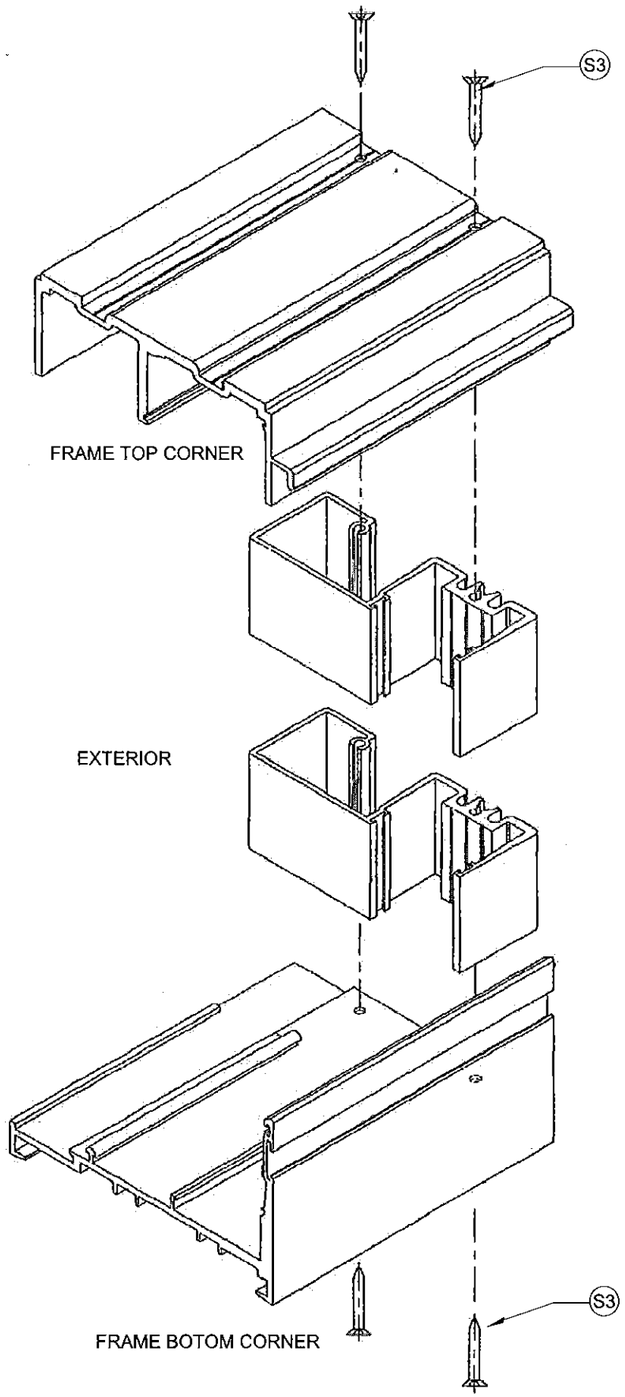

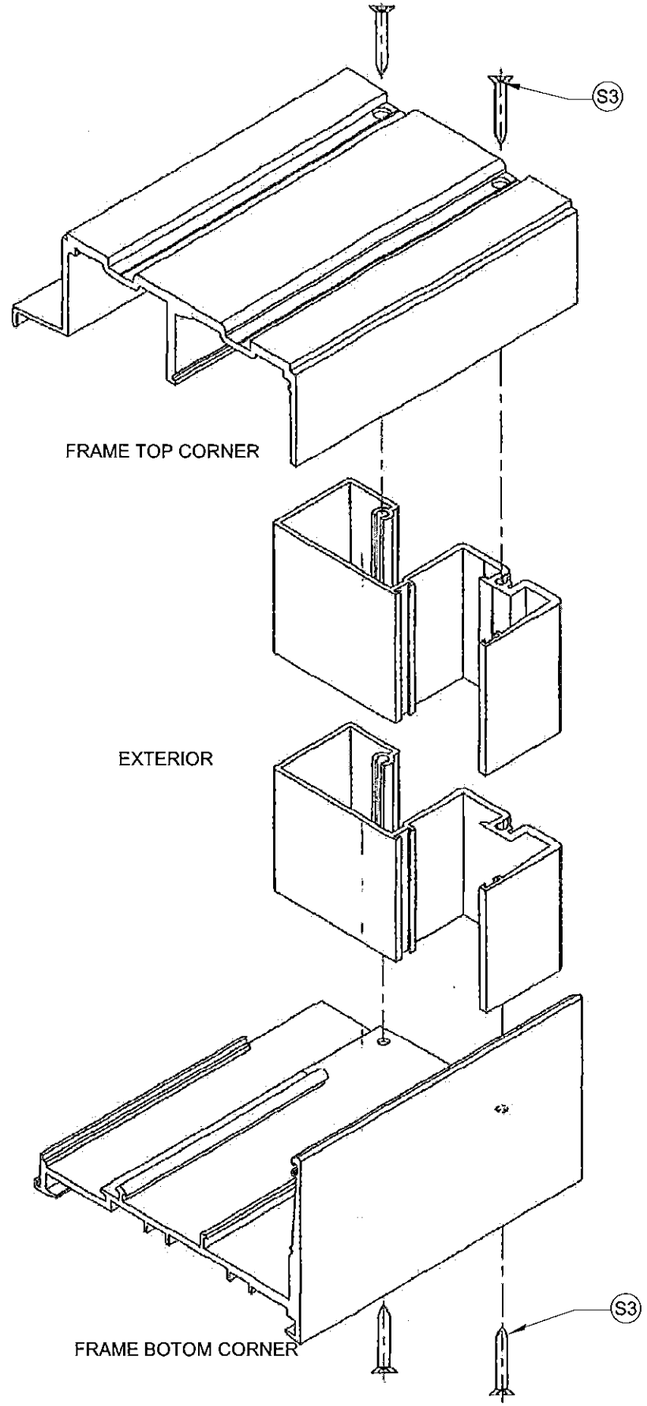

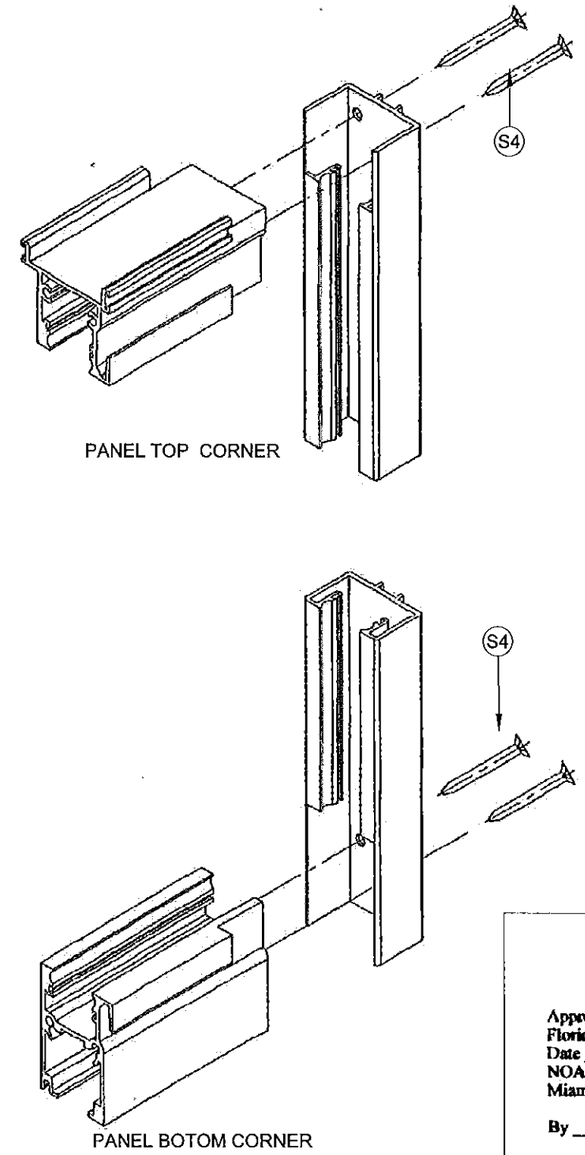

Approved as complying with the Florida Building Code
Date Nov 25, 2015
NOA# 15-0469.10
Miami Dade Product Control
By

EASTERN ENGINEERING GROUP
3401 NW 82 AVE SUITE 370 Miami, Florida 33122
Tel. (305) 599-8133 Fax. (305) 599-8076
www.easterneg.com
☐ RAISSA R. LOPEZ, PE (Lic No-59399)
☐ GONZALO A. PAZ, PE (Lic No-60734)
CERT. OF AUTHORIZATION No. 26655

REVISIONS

No.	DATE	DESCRIPTION

Drawing NO. 14 405

DESIGNED & DRAWN: EC_JM

SCALE : AS SHOWN

Product: SERIES CS240 ALUM. SLD. GLASS DOOR (S.M.L.)

MRC HOME SHOWCASE ALUMINUM WINDOWS AND DOORS
16115 NW 52nd Ave.
Miami Gardens, FL 33014
Phone: (305) 392 - 6214
Fax: (305) 280 - 6432

GONZALO A. PAZ LICENSE No 60734 STATE OF FLORIDA PROFESSIONAL ENGINEER

11/18/2015

SHEET 11 OF 11