MIAMI-DADE COUNTY
DEPARTMENT OF REGULATORY AND ECONOMIC RESOURCES (RER)
BOARD AND CODE ADMINISTRATION DIVISION

MIAMI-DADE COUNTY
PRODUCT CONTROL SECTION
11805 SW 26 Street, Room 208
T (786) 315-2590 F (786) 315-2599
www.miamidade.gov/economy

NOTICE OF ACCEPTANCE (NOA)

CGI Windows & Doors
10100 N.W. 25th Street
Doral, FL 33172

SCOPE:

This NOA is being issued under the applicable rules and regulations governing the use of construction materials. The documentation submitted has been reviewed and accepted by Miami-Dade County RER - Product Control Section to be used in Miami Dade County and other areas where allowed by the Authority Having Jurisdiction (AHJ).

This NOA shall not be valid after the expiration date stated below. The Miami-Dade County Product Control Section (In Miami Dade County) and/or the AHJ (in areas other than Miami Dade County) reserve the right to have this product or material tested for quality assurance purposes. If this product or material fails to perform in the accepted manner, the manufacturer will incur the expense of such testing and the AHJ may immediately revoke, modify, or suspend the use of such product or material within their jurisdiction. RER reserves the right to revoke this acceptance, if it is determined by Miami-Dade County Product Control Section that this product or material fails to meet the requirements of the applicable building code.

This product is approved as described herein, and has been designed to comply with the Florida Building Code, including the High Velocity Hurricane Zone.

DESCRIPTION: Series "560" Aluminum Sliding Glass Door (3–Track) w/ wo Reinforcements – S.M.I.

APPROVAL DOCUMENT: Drawing No. **W09-59**, titled "Series 560 Alum Sliding Glass Door – SMI", sheets 1 through 13 of 13, including sheets 2.1 and 9.1, dated 11/10/09, prepared by Al–Farooq Corporation, with latest revised "E" dated 12/23/15, signed and sealed by Javad Ahmad, P. E., bearing the Miami–Dade County Product Control Revision stamp with the Notice of Acceptance number and Expiration date by the Miami–Dade County Product Control Section.

MISSILE IMPACT RATING: Small Missile Impact Rating.

LABELING: Each unit shall bear a permanent label with the manufacturer's name or logo, city, state, model/series, and following statement: "Miami-Dade County Product Control Approved", unless otherwise noted herein.

RENEWAL of this NOA shall be considered after a renewal application has been filed and there has been no change in the applicable building code negatively affecting the performance of this product.

TERMINATION of this NOA will occur after the expiration date or if there has been a revision or change in the materials, use, and/or manufacture of the product or process. Misuse of this NOA as an endorsement of any product, for sales, advertising or any other purposes shall automatically terminate this NOA. Failure to comply with any section of this NOA shall be cause for termination and removal of NOA.

ADVERTISEMENT: The NOA number preceded by the words Miami-Dade County, Florida, and followed by the expiration date may be displayed in advertising literature. If any portion of the NOA is displayed, then it shall be done in its entirety.

INSPECTION: A copy of this entire NOA shall be provided to the user by the manufacturer or its distributors and shall be available for inspection at the job site at the request of the Building Official.

This NOA **revises NOA# 12-0416.04** and consists of page 1 and evidence pages E-1 and E-2, as well as approval document mentioned above.

The submitted documentation was reviewed by **Jorge M. Plasencia, P.E.**

MIAMI-DADE COUNTY APPROVED

12/30/15

NOTICE OF ACCEPTANCE: EVIDENCE SUBMITTED

A. DRAWINGS

1. Manufacturer's die drawings and sections.
   (Submitted under previous NOA No. 09-1209.05)
2. Drawing No. **W09-59**, titled "Series 560 Alum Sliding Glass Door – SMI", sheets 1 through 13 of 13, including sheets 2.1 and 9.1, dated 11/10/09, prepared by Al–Farooq Corporation, with latest revised "E" dated 12/23/15, signed and sealed by Javad Ahmad, P. E.

B. TESTS

1. Test reports on: 1) Air Infiltration Test, per FBC, TAS 202–94
   2) Uniform Static Air Pressure Test, Loading per FBC TAS 202–94
   3) Water Resistance Test, per FBC, TAS 202–94
   4) Small Missile Impact Test per FBC, TAS 201–94
   5) Large Missile Impact Test per FBC, TAS 201–94
   6) Cyclic Wind Pressure Loading per FBC, TAS 203–94
   7) Forced Entry Test, per FBC 2411 3.2.1, TAS 202–94

   along with marked–up drawings and installation diagram of an aluminum SGD, prepared by Hurricane Test Laboratory, Inc., Test Report No. **HTL***–0080–0707–09*, dated 11/10/09, signed and sealed by Vinu J. Abraham, P. E.
   (Submitted under previous NOA No. 09–1209.05)
2. Test reports on: 1) Air Infiltration Test, per FBC, TAS 202–94
   2) Uniform Static Air Pressure Test, Loading per FBC TAS 202–94
   3) Water Resistance Test, per FBC, TAS 202–94
   4) Small Missile Impact Test per FBC, TAS 201–94
   5) Cyclic Wind Pressure Loading per FBC, TAS 203–94
   6) Forced Entry Test, per FBC 2411 3.2.1, TAS 202–94

   along with marked–up drawings and installation diagram of an aluminum SGD, prepared by Hurricane Engineering Testing, Inc., Test Reports No.'s **HETI–08–2070, HETI–07–4427, HETI–07–4405, HETI–07–4418** and **HETI–07–4428**, dated 02/29/08, signed and sealed by Candido F. Font, P. E.
   (Submitted under previous NOA No. 08–0530.01)

C. CALCULATIONS

1. Anchor verification calculations and structural analysis, complying with **FBC-2014, 5th edition**, dated 03/20/15 and 12/10/15, prepared by Al Farooq Corporation, signed and sealed by Javad Ahmad, P.E.
2. Glazing complies with **ASTM E1300-09**

D. QUALITY ASSURANCE

1. Miami-Dade Department of Regulatory and Economic Resources (RER)

Jorge M. Plasencia, P.E.
Product Control Unit Supervisor
NOA No. 15-0413.04
Expiration Date: June 26, 2017
Approval Date: January 7, 2016

NOTICE OF ACCEPTANCE: EVIDENCE SUBMITTED (cont.)

E. MATERIAL CERTIFICATIONS

1. Notice of Acceptance No. **14-0423.17** issued to Eastman Chemical Company (MA). for their **"Saflex Clear and Color Glass Interlayers"** dated 06/19/2014, expiring on 05/21/2016.
2. Notice of Acceptance No. **14–0916.10** issued to Kuraray America, Inc. for their **"PVB Glass Interlayer"** dated 04/25/2015, expiring on 12/11/2016.

F. STATEMENTS

1. Statement letter of no financial interest, conformance and compliance with the **FBC–2014, 5th edition**, dated 03/20/15, signed and sealed by Javad Ahmad, P. E.
2. Laboratory compliance letters for Test Report No. **HTL–0080–0707–09**, issued by Hurricane Test Laboratory, Inc., dated November 10, 2009, signed and sealed by Vinu J. Abraham, P. E.
   (Submitted under previous NOA No. 09–1209.05)
3. Laboratory compliance letters for Test Reports No.'s **HETI–07–4405, HETI–07–4409, HETI–07–4416, HETI–07–4418, HETI-07-4424, HETI-07-4425** and **HETI–07–4426**, issued by Hurricane Engineering Testing, Inc., dated December 27, 2007, signed and sealed by Candido F. Font, P. E.
   (Submitted under previous NOA No. 08–0530.01)

G. OTHERS

1. Notice of Acceptance No. **12-0416.04**, issued to CGI Windows & Doors, for their Series "**560 Alum Sliding Glass Door (3-Track)– S.M.I.**", approved on 08/02/12 and expiring on 06/26/17.

Jorge M. Plasencia, P.E.
Product Control Unit Supervisor
NOA No. 15-0413.04
Expiration Date: June 26, 2017
Approval Date: January 7, 2016

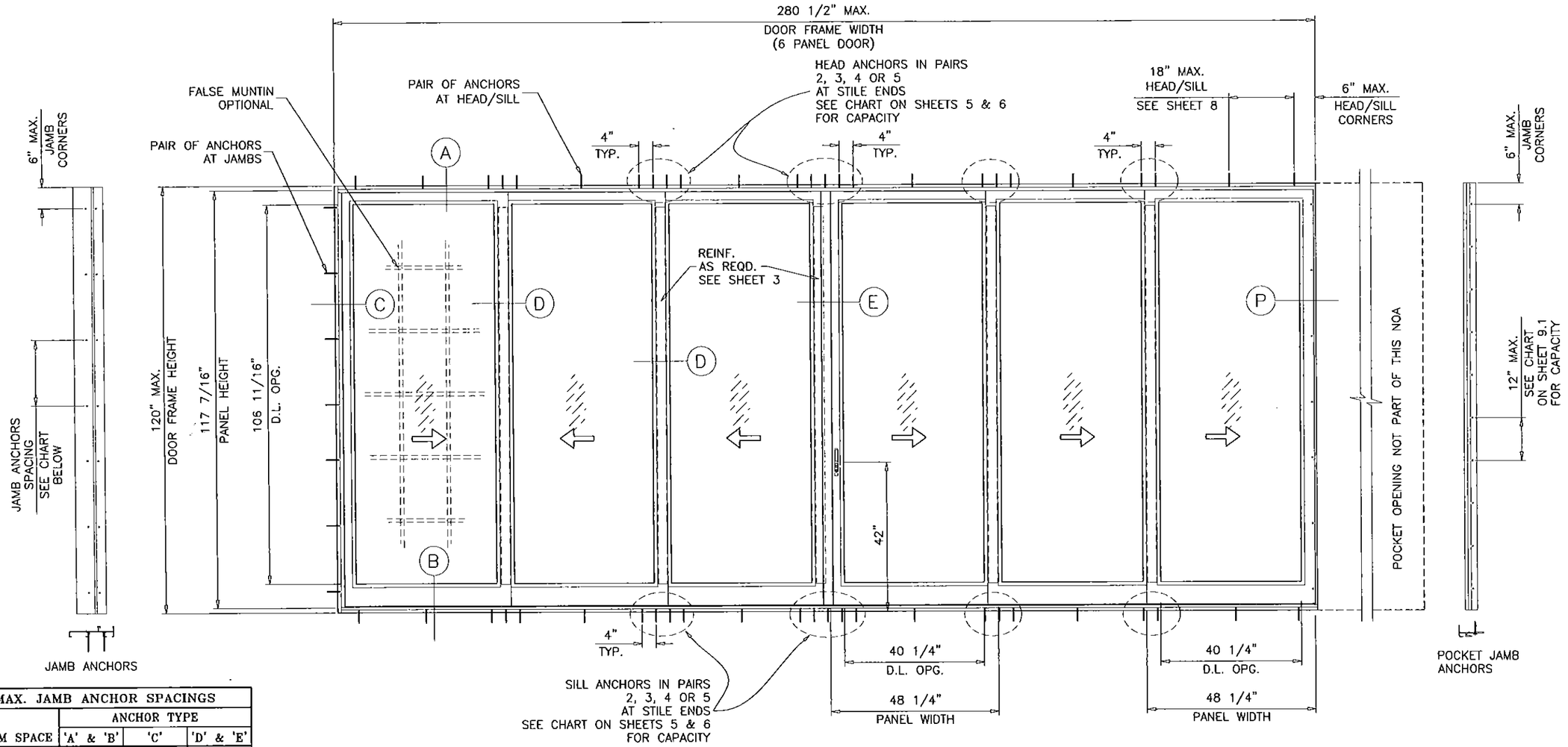

TYPICAL ELEVATION

MAX. JAMB ANCHOR SPACINGS			
	ANCHOR TYPE		
SHIM SPACE	'A' & 'B'	'C'	'D' & 'E'
1/4"	18-1/2"	18-1/2"	18-1/2"
3/8"	18-1/2"	–	18-1/2"
1/2"	9-1/4"	–	9-1/4"

D.L. OPENING
D.L.O HEIGHT = DOOR HEIGHT – 13 5/16"
D.L.O. WIDTH = PANEL WIDTH – 8"

SERIES 560 ALUM SLIDING GLASS DOOR (3 TRACK)

DESIGN LOAD RATING FOR DOORS TO BE AS PER CHARTS SHOWN ON SHEET 3.
APPLICABLE EGRESS REQUIREMENTS PER FBC TO BE REVIEWED BY BUILDING OFFICIAL.

THIS PRODUCT HAS BEEN DESIGNED AND TESTED TO COMPLY WITH THE REQUIREMENTS OF THE 2014 (5TH EDITION) FLORIDA BUILDING CODE INCLUDING HIGH VELOCITY HURRICANE ZONE (HVHZ).

1BY OR 2BY WOOD BUCKS BY OTHERS, MUST BE ANCHORED PROPERLY TO TRANSFER LOADS TO THE STRUCTURE.

ANCHORS SHALL BE AS LISTED, SPACED AS SHOWN ON DETAILS, ANCHORS EMBEDMENT TO BASE MATERIAL SHALL BE BEYOND WALL DRESSING OR STUCCO.

ANCHORING OR LOADING CONDITIONS NOT SHOWN IN THESE DETAILS ARE NOT PART OF THIS APPROVAL.

A LOAD DURATION INCREASE IS USED IN DESIGN OF ANCHORS INTO WOOD ONLY.

ALL SHIMS TO BE HIGH IMPACT, NON-METALLIC AND NON-COMPRESSIBLE.

MATERIALS INCLUDING BUT NOT LIMITED TO STEEL/METAL SCREWS, THAT COME INTO CONTACT WITH OTHER DISSIMILAR MATERIALS SHALL MEET THE REQUIREMENTS OF 2014 THE FLORIDA BUILDING CODE.

ALTERNATE SIZE UNITS:
MAX. FRAME AREA OF DOORS WITHOUT POCKETS NOT TO EXCEED 350.6 SQ. FT.

INSTRUCTIONS:

USE CHARTS AS FOLLOWS.

STEP 1 DETERMINE DESIGN WIND LOAD REQUIREMENT BASED ON WIND VELOCITY, BLDG. HEIGHT, WIND ZONE USING APPLICABLE ASCE 7 STANDARD.

STEP 2 DETERMINE DOOR CAPACITY FROM TABLES ON SHEET 3 FOR THE GLASS TYPE AND REINFORCING TO USE.

STEP 3 USING CHARTS ON SHEET 5 & 6 SELECT ANCHOR OPTION WITH DESIGN RATING MORE THAN DESIGN LOAD SPECIFIED IN STEP 1 ABOVE.

STEP 4 (IF REQUIRED) FOR SIDE BY SIDE DOORS WITH VERTICAL MULLION CHECK TUBE CAPACITY FROM CHART ON SHEET 13. SELECT ANCHORS AS PER STEP 3.

STEP 5 THE LOWEST VALUE RESULTING FROM STEPS 2, 3 AND 4 SHALL APPLY TO ENTIRE SYSTEM.

THESE DOORS ARE RATED FOR SMALL MISSILE IMPACT.
MIAMI-DADE COUNTY APPROVED IMPACT RESISTANT SHUTTERS REQUIRED FOR INSTALLATIONS UP TO 30 FT. OF GRADE.
SHUTTERS NOT REQD. FOR INSTALLATIONS ABOVE 30 FT. OF GRADE.

3 TRACK DOORS

LAMINATED GLASS AND
LAMINATED INSULATING GLASS
SMALL MISSILE IMPACT

Engr: JAVAD AHMAD
CIVIL
FLA. PE # 70592
C.A.N. 3538

DEC 23 2015

PRODUCT REVISED
as complying with the Florida Building Code
Acceptance No 15-0413.04
Expiration Date June 26, 2017
By
Miami Dade Product Control

AL-FAROOQ CORPORATION
ENGINEERS & PRODUCT DEVELOPMENT
9360 SUNSET DRIVE, SUITE 220
MIAMI, FLORIDA 33173
TEL. (305) 264-8100 FAX. (305) 262-6978
COMP-ANL\W09-59CGI

SERIES-560 ALUM SLIDING GLASS DOOR (S.M.I.)

CGI Windows and Doors, Inc.
10100 N.W. 25TH STREET
MIAMI, FL. 33172
TEL. (305) 593-6590 FAX. (305) 593-6592

revisions:

no	date	by	description
A	03.23.12		UPDATED TO 2010 FBC
B	03.03.15		UPDATED TO 2014 FBC
C	05.04.15		NO CHANGE THIS SHEET
D	11.30.15		REV. PER RER COMMENTS
E	12.23.15		REV. PER RER COMMENTS

date: 11-10-09
scale: 3/8"=1'-0"
dr. by: HAMID
chk. by:

drawing no.
W09-59

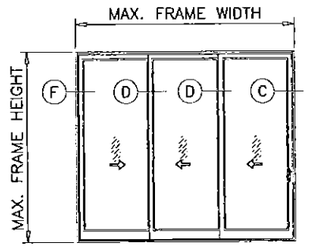

XXX (SHOWN)
OXX
XXO

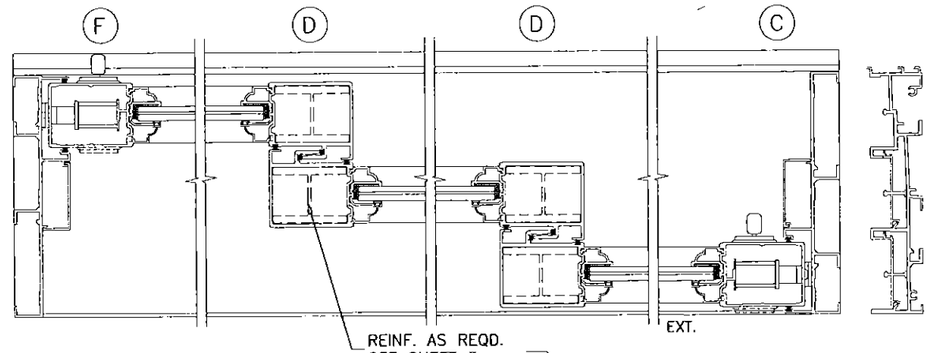

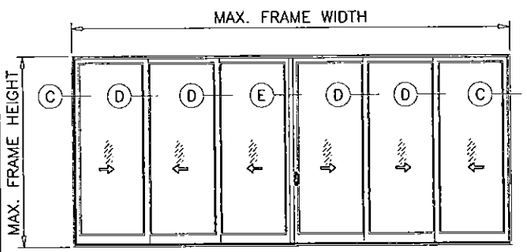

XXXXXX (SHOWN)
OXXXXO

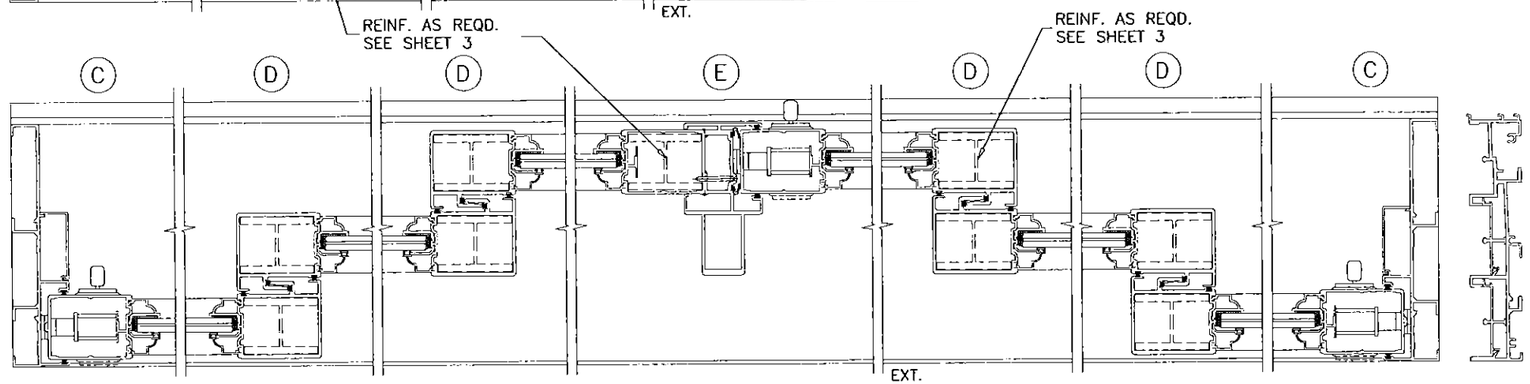

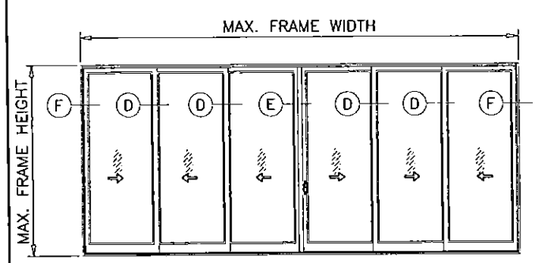

XXXXXX (SHOWN)
OXXXXO

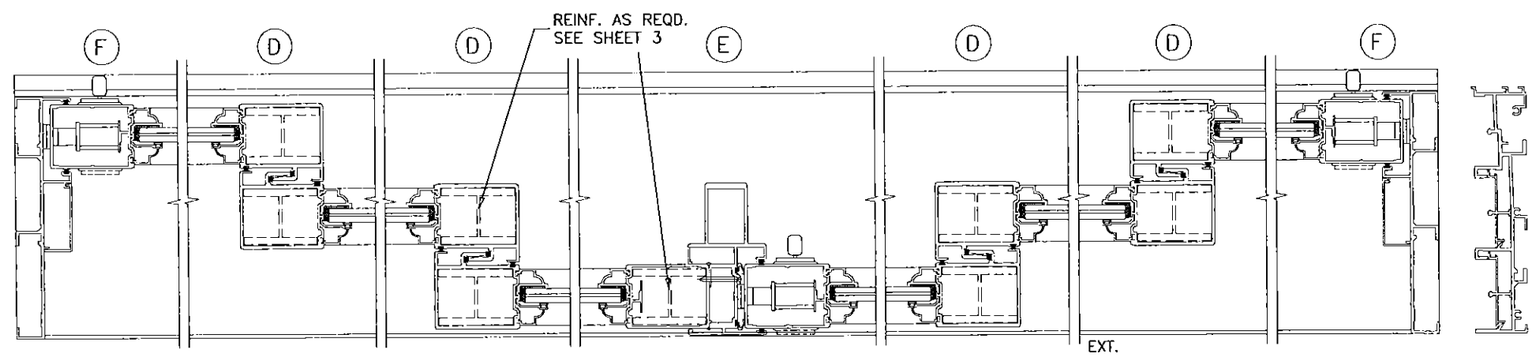

APPROVED CONFIGURATIONS
NON–POCKETED DOORS

Over–all Door Frame Width based on Panel Width

Panel Width	3 Panel Door Frame Width	6 Panel Door Frame Width
24 1/4"	69 1/4"	137 1/2"
30 1/4"	87 1/4"	173 1/2"
36 1/4"	105 1/4"	209 1/2"
42 1/4"	123 1/4"	245 1/2"
48 1/4"	141 1/4"	281 1/2"
54 1/4"	159 1/4"	317 1/2"
60 1/4"	177 1/4"	353 1/2"

MAXIMUM DOOR HEIGHT = 120"

Formula to convert Door Width to Panel Width

For 3 Panel Doors: (Door Width + 3 1/2")/3 = Panel Width
For 6 Panel Doors: (Door Width + 8")/6 = Panel Width

Formula to convert Panel Width to Door Width

For 3 Panel Doors: Panel Width x 3 – 3 1/2" = Door Width
For 6 Panel Doors: Panel Width x 6 – 8" = Door Width

Panel Height Formula

Door Height – 2 9/16" = Panel Height

D.L. OPENING
D.L.O HEIGHT = DOOR HEIGHT – 13 5/16"
D.L.O. WIDTH = PANEL WIDTH – 8"

Engr: JAVAD AHMAD
CIVIL
FLA. PE # 70592
C.A.N 3538

DEC 2 3 2015

PRODUCT REVISED
as complying with the Florida
Building Code
Acceptance No 15-0413.04
Expiration Date 6/26/2017
By
Miami Dade Product Control

AL-FAROOQ CORPORATION
ENGINEERS & PRODUCT DEVELOPMENT
9360 SUNSET DRIVE, SUITE 220
MIAMI, FLORIDA 33173
TEL. (305) 264-8100 FAX. (305) 262-6978

COMP–ANL\W09–59CGI

SERIES–560 ALUM SLIDING GLASS DOOR (S.M.I.)

CGI Windows and Doors, Inc.
10100 N.W. 25TH STREET
MIAMI, FL. 33172
TEL. (305) 593–6590 FAX. (305) 593–6592

revisions:

no	date	by	description
A	03.23.12		NO CHANGE THIS SHEET
B	03.03.15		NO CHANGE THIS SHEET
C	05.04.15		NO CHANGE THIS SHEET
D	11.30.15		REV. PER RER COMMENTS
E	12.23.15		REV. PER RER COMMENTS

date: 11–10–09
scale: –
dr. by: HAMID
chk. by:

drawing no.
W09–59

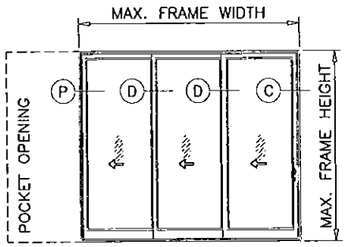

PXXX(SHOWN)
XXXP

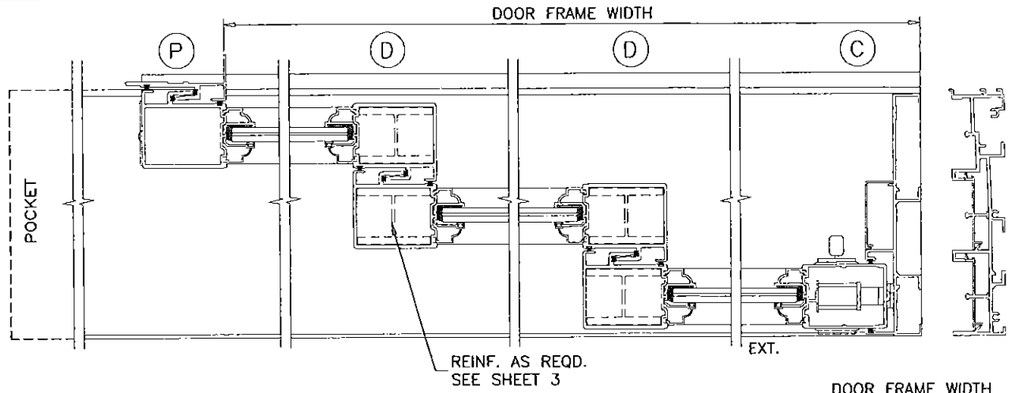

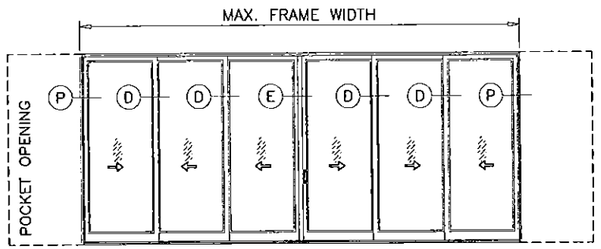

PXXXXXXP (SHOWN)

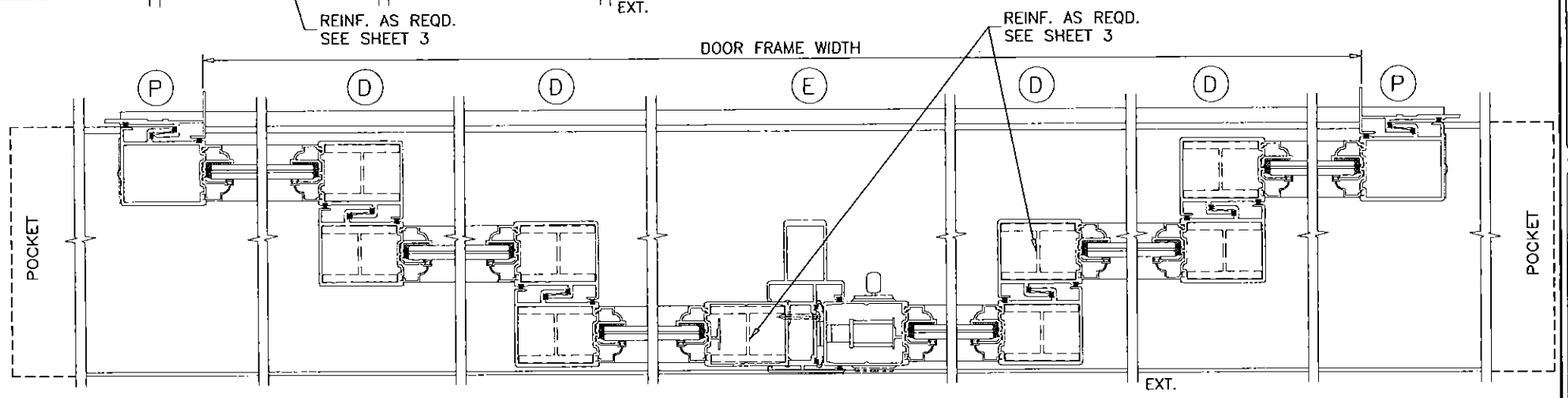

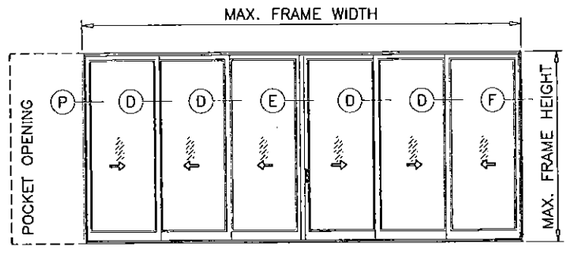

PXXXXXX(SHOWN)
PXXXXXO
XXXXXXP
OXXXXXP

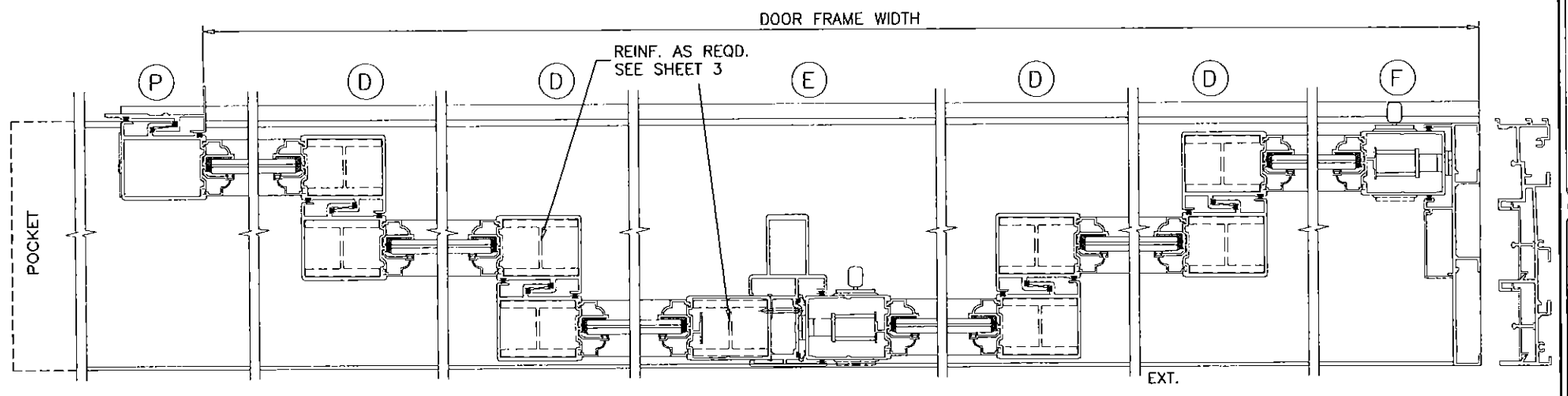

APPROVED CONFIGURATIONS POCKETED DOORS

Over-all Door Width based on Panel Width

Panel Width	PXXX, XXXP Door Width	PXXXXXXP Door Width	PXXXXXX Door Width
24 1/4"	65 1/4"	129 3/8"	133 7/16"
30 1/4"	83 1/4"	165 3/8"	169 7/16"
36 1/4"	101 1/4"	201 3/8"	205 7/16"
42 1/4"	119 1/4"	237 3/8"	241 7/16"
48 1/4"	137 1/4"	273 3/8"	277 7/16"
54 1/4"	155 1/4"	309 3/8"	313 7/16"
60 1/4"	173 1/4"	345 3/8"	349 7/16"

MAXIMUM DOOR HEIGHT = 120"

Formula to convert Door Width to Panel Width

For PXXX: (Door Width + 7 1/2")/3 = Panel Width
For PXXXXXXP: (Door Width + 16 1/8")/6 = Panel Width
For PXXXXXX: (Door Width + 12 1/16")/6 = Panel Width

Formula to convert Panel Width to Door Width

For PXXX: Panel Width x 3 – 7 1/2" = Door Width
For PXXXXXXP: Panel Width x 6 – 16 1/8" = Door Width
For PXXXXXX: Panel Width x 6 – 12 1/16" = Door Width

Panel Height Formula

Door Height – 2 9/16" = Panel Height

D.L. OPENING
D.L.O HEIGHT = DOOR HEIGHT – 13 5/16"
D.L.O. WIDTH = PANEL WIDTH – 8"

Engr: JAVAD AHMAD
CIVIL
FLA. PE # 70592
C.A.N. 3538

DEC 23 2015

PRODUCT REVISED
as complying with the Florida Building Code
Acceptance No 15-0413.04
Expiration Date 6/24/2017
By
Miami Dade Product Control

AL-FAROOQ CORPORATION
ENGINEERS & PRODUCT DEVELOPMENT
9360 SUNSET DRIVE, SUITE 220
MIAMI, FLORIDA 33173
TEL. (305) 264-8100 FAX. (305) 262-6978

COMP-ANL\W09-59CGI

SERIES-560 ALUM SLIDING GLASS DOOR (S.M.I.)

CGI Windows and Doors, Inc.
10100 N.W. 25TH STREET
MIAMI, FL. 33172
TEL. (305) 593-6590 FAX. (305) 593-6592

revisions:

no	date	by	description
A	03.23.12		NO CHANGE THIS SHEET
B	03.03.15		NO CHANGE THIS SHEET
C	05.04.15		NO CHANGE THIS SHEET
D	11.30.15		REV. PER RER COMMENTS
E	12.23.15		REV. PER RER COMMENTS

date: 11-10-09
scale: -
dr. by: HAMID
chk. by:

drawing no.
W09-59

DESIGN LOAD CAPACITY – PSF (GLASS)					
PANEL WIDTH INCHES	DOOR FRAME HEIGHT INCHES	GLASS TYPES '3' & '3A'			
		W/O REINF.		WITH REINF.	
		EXT.(+)	INT.(–)	EXT.(+)	INT.(–)
24–1/4	80	120.0	140.0	120.0	140.0
30–1/4		120.0	125.7	120.0	140.0
33–1/4		116.1	116.1	120.0	140.0
36–1/4		106.5	106.5	120.0	140.0
39–1/4		98.3	98.3	120.0	140.0
42–1/4		91.4	91.4	120.0	140.0
44–1/4		87.2	87.2	120.0	140.0
46–1/4		83.5	83.5	120.0	140.0
48–1/4		80.0	80.0	120.0	140.0
50–1/4		76.8	76.8	115.2	134.4
52–1/4		73.9	73.9	110.8	129.3
54–1/4		71.2	71.2	106.7	124.5
56–1/4		68.6	68.6	102.9	120.1
58–1/4		66.3	66.3	99.4	116.0
60–1/4		64.1	64.1	96.1	112.1
24–1/4	84	120.0	140.0	120.0	140.0
30–1/4		120.0	124.3	120.0	140.0
33–1/4		115.6	115.6	120.0	140.0
36–1/4		106.5	106.5	120.0	140.0
39–1/4		98.3	98.3	120.0	140.0
42–1/4		91.4	91.4	120.0	140.0
44–1/4		87.2	87.2	120.0	140.0
46–1/4		83.5	83.5	120.0	140.0
48–1/4		80.0	80.0	120.0	140.0
50–1/4		76.8	76.8	115.2	134.4
52–1/4		73.9	73.9	110.8	129.3
54–1/4		71.2	71.2	106.7	124.5
56–1/4		68.6	68.6	102.9	120.1
58–1/4		66.3	66.3	99.4	116.0
60–1/4		64.1	64.1	96.1	112.1
24–1/4	90	120.0	140.0	120.0	140.0
30–1/4		120.0	122.5	120.0	140.0
33–1/4		113.8	113.8	120.0	140.0
36–1/4		106.5	106.5	120.0	140.0
39–1/4		98.3	98.3	120.0	140.0
42–1/4		91.4	91.4	120.0	140.0
44–1/4		87.2	87.2	120.0	140.0
46–1/4		83.5	83.5	120.0	140.0
48–1/4		80.0	80.0	120.0	140.0
50–1/4		76.8	76.8	115.2	134.4
52–1/4		73.9	73.9	110.8	129.3
54–1/4		71.2	71.2	106.7	124.5
56–1/4		68.6	68.6	102.9	120.1
58–1/4		66.3	66.3	99.4	116.0
60–1/4		64.1	64.1	96.1	112.1
24–1/4	96	120.0	140.0	120.0	140.0
30–1/4		120.0	121.0	120.0	140.0
33–1/4		112.2	112.2	120.0	140.0
36–1/4		104.9	104.9	120.0	140.0
39–1/4		98.3	98.3	120.0	140.0
42–1/4		91.4	91.4	120.0	140.0
44–1/4		87.2	87.2	120.0	140.0
46–1/4		83.5	83.5	120.0	140.0
48–1/4		80.0	80.0	120.0	140.0
50–1/4		76.8	76.8	115.2	134.4
52–1/4		73.9	73.9	110.8	129.3
54–1/4		71.2	71.2	106.7	124.5
56–1/4		68.6	68.6	102.9	120.1
58–1/4		66.3	66.3	99.4	116.0
60–1/4		64.1	64.1	96.1	112.1

DESIGN LOAD CAPACITY – PSF (GLASS)					
PANEL WIDTH INCHES	DOOR FRAME HEIGHT INCHES	GLASS TYPES '3' & '3A'			
		W/O REINF.		WITH REINF.	
		EXT.(+)	INT.(–)	EXT.(+)	INT.(–)
24–1/4	99	80.0	80.0	120.0	140.0
30–1/4		80.0	80.0	120.0	140.0
33–1/4		80.0	80.0	120.0	140.0
36–1/4		80.0	80.0	120.0	140.0
39–1/4		80.0	80.0	120.0	140.0
42–1/4		80.0	80.0	120.0	140.0
44–1/4		80.0	80.0	120.0	140.0
46–1/4		80.0	80.0	120.0	140.0
48–1/4		80.0	80.0	120.0	140.0
50–1/4		80.0	80.0	115.2	134.4
52–1/4		76.8	76.8	110.8	129.3
54–1/4		73.9	73.9	106.7	124.5
56–1/4		71.2	71.2	102.9	120.1
58–1/4		66.3	66.3	99.4	116.0
60–1/4		–	–	90.0	90.0
24–1/4	102	80.0	80.0	120.0	140.0
30–1/4		80.0	80.0	120.0	140.0
33–1/4		80.0	80.0	120.0	140.0
36–1/4		80.0	80.0	120.0	140.0
39–1/4		80.0	80.0	120.0	140.0
42–1/4		80.0	80.0	120.0	140.0
44–1/4		80.0	80.0	120.0	140.0
46–1/4		80.0	80.0	120.0	140.0
48–1/4		80.0	80.0	120.0	140.0
50–1/4		76.8	76.8	115.2	134.4
52–1/4		73.9	73.9	110.8	129.3
54–1/4		71.2	71.2	106.7	124.5
56–1/4		–	–	102.9	120.1
58–1/4		–	–	90.0	90.0
60–1/4		–	–	90.0	90.0
24–1/4	105	80.0	80.0	120.0	140.0
30–1/4		80.0	80.0	120.0	140.0
33–1/4		80.0	80.0	120.0	140.0
36–1/4		80.0	80.0	120.0	140.0
39–1/4		80.0	80.0	120.0	140.0
42–1/4		80.0	80.0	120.0	140.0
44–1/4		80.0	80.0	120.0	140.0
46–1/4		80.0	80.0	120.0	140.0
48–1/4		80.0	80.0	120.0	140.0
50–1/4		76.8	76.8	115.2	34.4
52–1/4		73.9	73.9	110.8	129.3
54–1/4		71.2	71.2	106.7	124.5
56–1/4		–	–	90.0	90.0
58–1/4		–	–	90.0	90.0
60–1/4		–	–	90.0	90.0
24–1/4	108	80.0	80.0	120.0	140.0
30–1/4		80.0	80.0	120.0	140.0
33–1/4		80.0	80.0	120.0	140.0
36–1/4		80.0	80.0	120.0	140.0
39–1/4		80.0	80.0	120.0	140.0
42–1/4		80.0	80.0	120.0	140.0
44–1/4		80.0	80.0	120.0	140.0
46–1/4		80.0	80.0	120.0	140.0
48–1/4		80.0	80.0	120.0	140.0
50–1/4		76.8	76.8	115.2	134.4
52–1/4		73.9	73.9	110.8	129.3
54–1/4		–	–	90.0	90.0
56–1/4		–	–	90.0	90.0
58–1/4		–	–	90.0	90.0
60–1/4		–	–	90.0	90.0

DESIGN LOAD CAPACITY – PSF (GLASS)					
PANEL WIDTH INCHES	DOOR FRAME HEIGHT INCHES	GLASS TYPES '3' & '3A'			
		W/O REINF.		WITH REINF.	
		EXT.(+)	INT.(–)	EXT.(+)	INT.(–)
24–1/4	111	80.0	80.0	120.0	140.0
30–1/4		80.0	80.0	120.0	140.0
33–1/4		80.0	80.0	120.0	140.0
36–1/4		80.0	80.0	120.0	140.0
39–1/4		80.0	80.0	120.0	140.0
42–1/4		80.0	80.0	120.0	140.0
44–1/4		80.0	80.0	120.0	140.0
46–1/4		80.0	80.0	120.0	140.0
48–1/4		80.0	80.0	120.0	140.0
50–1/4		76.8	76.8	115.2	134.4
52–1/4		–	–	90.0	90.0
54–1/4		–	–	90.0	90.0
56–1/4		–	–	90.0	90.0
58–1/4		–	–	90.0	90.0
60–1/4		–	–	90.0	90.0
24–1/4	114	80.0	80.0	120.0	140.0
30–1/4		80.0	80.0	120.0	140.0
33–1/4		80.0	80.0	120.0	140.0
36–1/4		80.0	80.0	120.0	140.0
39–1/4		80.0	80.0	120.0	140.0
42–1/4		80.0	80.0	120.0	140.0
44–1/4		80.0	80.0	120.0	140.0
46–1/4		80.0	80.0	120.0	140.0
48–1/4		80.0	80.0	120.0	140.0
50–1/4		76.8	76.8	115.2	134.4
52–1/4		–	–	90.0	90.0
54–1/4		–	–	90.0	90.0
56–1/4		–	–	90.0	90.0
58–1/4		–	–	90.0	90.0
60–1/4		–	–	90.0	90.0
24–1/4	117	80.0	80.0	120.0	140.0
30–1/4		80.0	80.0	120.0	140.0
33–1/4		80.0	80.0	120.0	140.0
36–1/4		80.0	80.0	120.0	140.0
39–1/4		80.0	80.0	120.0	140.0
42–1/4		80.0	80.0	120.0	140.0
44–1/4		80.0	80.0	120.0	140.0
46–1/4		80.0	80.0	120.0	140.0
48–1/4		80.0	80.0	120.0	140.0
50–1/4		–	–	90.0	90.0
52–1/4		–	–	90.0	90.0
54–1/4		–	–	90.0	90.0
56–1/4		–	–	90.0	90.0
58–1/4		–	–	90.0	90.0
60–1/4		–	–	90.0	90.0
24–1/4	120	80.0	80.0	120.0	140.0
30–1/4		80.0	80.0	120.0	140.0
33–1/4		80.0	80.0	120.0	140.0
36–1/4		80.0	80.0	120.0	140.0
39–1/4		80.0	80.0	120.0	140.0
42–1/4		80.0	80.0	120.0	140.0
44–1/4		80.0	80.0	120.0	140.0
46–1/4		80.0	80.0	120.0	140.0
48–1/4		80.0	80.0	120.0	140.0
50–1/4		–	–	90.0	90.0
52–1/4		–	–	90.0	90.0
54–1/4		–	–	90.0	90.0
56–1/4		–	–	90.0	90.0
58–1/4		–	–	90.0	90.0
60–1/4		–	–	90.0	90.0

GLASS CAPACITY CHARTS

NOTE:
APPROPRIATE SILL RISER TO BE SELECTED FOR MAX. POSITIVE DESIGN PRESSURE SEE DETAILS ON SHEET 4.
OBTAIN ANCHOR TYPE AND CONFIGURATION TO USE FROM ANCHOR CHARTS ON SHEET 5
MULLION SIZE AND CAPACITY TO BE OBTAINED FROM CHARTS ON SHEET 12.
LOWEST APPLICABLE VALUE FROM THE ABOVE WILL APPLY TO CONDITION REVIEWED.

NOTE:
GLASS CAPACITIES ON THIS SHEET ARE BASED ON ASTM E1300–09 (3 SEC. GUSTS) AND FLORIDA BUILDING COMMISSION DECLARATORY STATEMENT DCA05–DEC–219

PRODUCT REVISED
as complying with the Florida Building Code
Acceptance No 15-0413.04
Expiration Date 6/26/2017
By
Miami Dade Product Control

Engr: JAVAD AHMAD
CIVIL
FLA. PE # 70592
C.A.N. 3538

DEC 23 2015

AL-FAROOQ CORPORATION
ENGINEERS & PRODUCT DEVELOPMENT
9360 SUNSET DRIVE, SUITE 220
MIAMI, FLORIDA 33173
TEL. (305) 264-8100 FAX. (305) 262-6978

COMP–ANL\W09–59CGI

SERIES–560 ALUM SLIDING GLASS DOOR (S.M.I.)

CGI Windows and Doors, Inc.
10100 N.W. 25TH STREET
MIAMI, FL. 33172
TEL. (305) 593–6590 FAX. (305) 593–6592

revisions:

no	date	by	description
A	03.23.12		UPDATED TO 2010 FBC
B	03.03.15		UPDATED TO 2014 FBC
C	05.04.15		NO CHANGE THIS SHEET
D	11.30.15		REV. PER RER COMMENTS
E	12.23.15		NO CHANGE THIS SHEET

date: 11–10–09
scale: –
dr. by: HAMID
chk. by:

drowing no.
W09–59

sheet 3 of 13

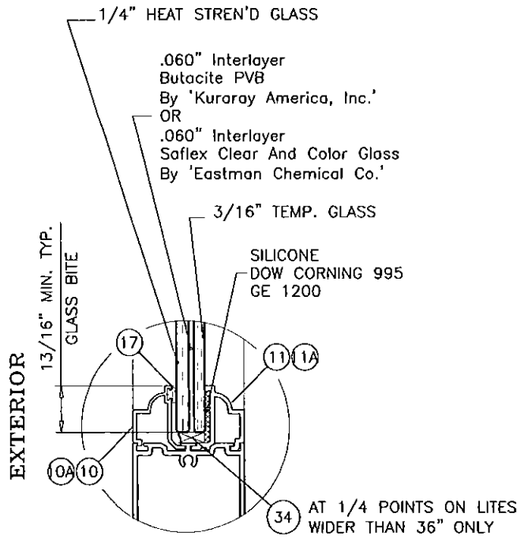

GLASS TYPE '3'

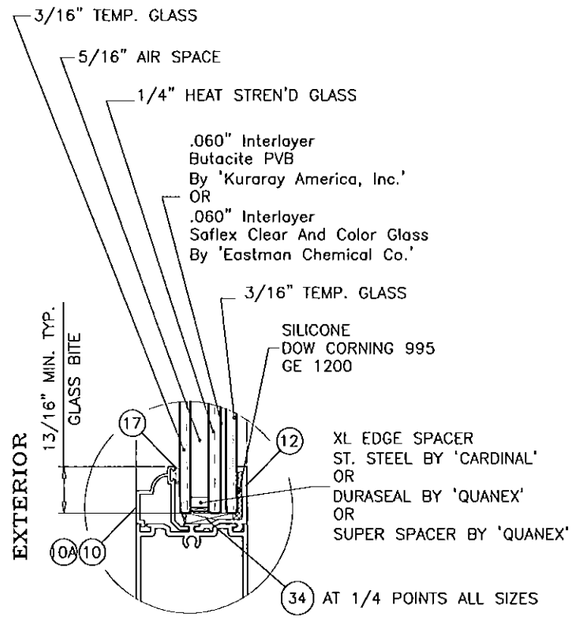

GLASS TYPE '3A'

GLAZING OPTIONS

NOTE:
3/16" AND 1/4" PIECES OF GLASS ON THE 1/2" LAMINATED UNIT ARE INTERCHANGEABLE (EX: 3/16" + 1/4" OR 1/4" + 3/16")

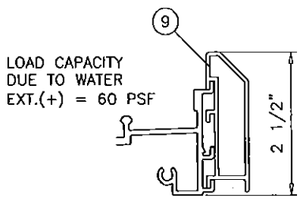

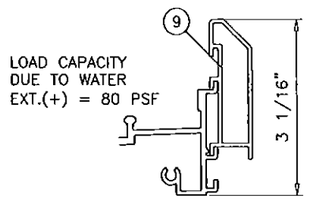

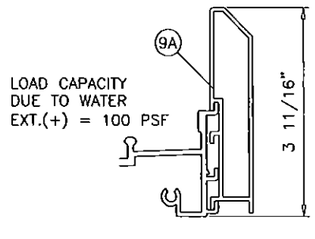

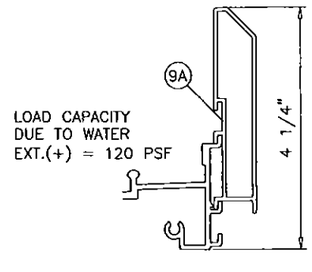

LOAD CAPACITIES SHOWN IN CHART ON SHEET 3 ARE FOR DOORS USING 4-1/4" SILL HEIGHTS
FOR DOORS USING LOWER SILL HEIGHTS LIMIT EXTERIOR(+) LOADS AS SHOWN ABOVE.

Engr: JAVAD AHMAD
CIVIL
FLA. PE # 70592
C.A.N. 3538

DEC 2 3 2015

PRODUCT REVISED
as complying with the Florida
Building Code
Acceptance No 15-0413.04
Expiration Date 6/26/2017
By
Miami Dade Product Control

AL-FAROOQ CORPORATION
ENGINEERS & PRODUCT DEVELOPMENT
9360 SUNSET DRIVE, SUITE 220
MIAMI, FLORIDA 33173
TEL. (305) 264-8100 FAX. (305) 262-6978

COMP-ANL\W09-59CGI

SERIES-560 ALUM SLIDING GLASS DOOR (S.M.I.)

CGI Windows and Doors, Inc.
10100 N.W. 25TH STREET
MIAMI, FL. 33172
TEL. (305) 593-6590 FAX. (305) 593-6592

revisions:

no	date	by	description
A	03.23.12		NO CHANGE THIS SHEET
B	03.03.15		UPDATED TO 2014 FBC
C	05.04.15		SPACER REV.
D	11.30.15		REV. PER RER COMMENTS
E	12.23.15		NO CHANGE THIS SHEET

date: 11-10-09
scale: -
dr. by: HAMID
chk. by:

drawing no.
W09-59

DESIGN LOAD CAPACITY – PSF (ANCHORS AT HEAD/SILL)

PANEL WIDTH INCHES	DOOR FRAME HEIGHT INCHES	ANCHORS TYPE 'A' 1/4" SHIM SPACE			ANCHORS TYPE 'B' 1/4" SHIM SPACE			ANCHORS TYPE 'A' & 'B' 3/8" SHIM SPACE			ANCHORS TYPE 'A' & 'B' 1/2" SHIM SPACE			ANCHORS TYPE 'C' 1/4" SHIM SPACE		
		2 PAIRS	3 PAIRS	4 PAIRS	2 PAIRS	3 PAIRS	4 PAIRS	2 PAIRS	3 PAIRS	4 PAIRS	3 PAIRS	4 PAIRS	5 PAIRS	2 PAIRS	3 PAIRS	4 PAIRS
24-1/4	80	140.0	140.0	140.0	140.0	140.0	140.0	100.5	120.6	140.0	94.1	125.5	140.0	140.0	140.0	140.0
30-1/4		118.9	140.0	140.0	140.0	140.0	140.0	80.6	96.7	128.9	75.4	100.6	125.7	140.0	140.0	140.0
36-1/4		124.0	140.0	140.0	140.0	140.0	140.0	80.7	94.1	121.0	73.5	94.4	115.4	140.0	140.0	140.0
42-1/4		106.4	149.0	140.0	140.0	140.0	140.0	69.2	80.8	103.8	63.0	81.0	99.0	140.0	140.0	140.0
48-1/4		93.2	130.4	140.0	137.6	140.0	140.0	60.6	70.7	90.9	55.2	70.9	86.7	140.0	140.0	140.0
54-1/4		99.4	124.5	124.5	124.5	124.5	124.5	62.9	71.9	89.9	56.1	70.1	84.1	124.5	124.5	124.5
60-1/4		89.5	112.1	112.1	112.1	112.1	112.1	56.6	64.7	80.9	50.5	63.1	75.8	112.1	112.1	112.1
24-1/4	84	140.0	140.0	140.0	140.0	140.0	140.0	98.1	117.7	140.0	91.9	122.5	140.0	140.0	140.0	140.0
30-1/4		116.1	140.0	140.0	140.0	140.0	140.0	78.7	94.4	125.9	73.6	98.2	122.7	140.0	140.0	140.0
36-1/4		121.1	140.0	140.0	140.0	140.0	140.0	78.8	91.9	118.2	71.7	92.2	112.7	140.0	140.0	140.0
42-1/4		103.9	140.0	140.0	140.0	140.0	140.0	67.6	78.8	101.4	61.5	79.1	96.7	140.0	140.0	140.0
48-1/4		91.0	127.3	140.0	134.3	140.0	140.0	59.2	69.0	88.8	53.9	69.3	84.7	138.9	140.0	140.0
54-1/4		97.1	124.5	124.5	124.5	124.5	124.5	61.4	70.2	87.7	54.8	68.4	82.1	124.5	124.5	124.5
60-1/4		87.4	112.1	112.1	112.1	112.1	112.1	55.3	63.2	79.0	49.3	61.6	74.0	112.1	112.1	112.1
24-1/4	90	135.1	140.0	140.0	140.0	140.0	140.0	91.6	109.9	140.0	85.7	114.3	140.0	140.0	140.0	140.0
30-1/4		108.3	140.0	140.0	140.0	140.0	140.0	73.4	88.1	117.5	68.7	91.7	114.6	165.4	140.0	140.0
36-1/4		113.0	140.0	140.0	140.0	140.0	140.0	73.5	85.8	110.3	66.9	86.0	105.2	140.0	140.0	140.0
42-1/4		96.9	135.7	140.0	140.0	140.0	140.0	63.1	73.6	94.6	57.4	73.8	90.2	140.0	140.0	140.0
48-1/4		84.9	118.8	140.0	125.3	140.0	140.0	55.2	64.4	82.8	50.3	64.6	79.0	129.7	140.0	140.0
54-1/4		90.6	120.8	124.5	124.5	124.5	124.5	57.3	65.5	81.9	51.1	63.9	76.7	124.5	124.5	124.5
60-1/4		81.6	108.8	112.1	112.1	112.1	112.1	51.6	59.0	73.7	46.0	57.5	69.0	112.1	112.1	112.1
24-1/4	96	126.7	140.0	140.0	140.0	140.0	140.0	85.9	103.0	137.4	80.4	107.2	134.0	140.0	140.0	140.0
30-1/4		101.6	140.0	140.0	140.0	140.0	140.0	68.8	82.6	110.1	64.4	85.9	107.4	140.0	140.0	140.0
36-1/4		105.9	140.0	140.0	140.0	140.0	140.0	68.9	80.4	103.4	62.7	80.7	98.6	140.0	140.0	140.0
42-1/4		90.9	127.2	140.0	134.2	140.0	140.0	59.1	69.0	88.7	53.8	69.2	84.6	138.8	140.0	140.0
48-1/4		79.6	111.4	140.0	117.5	140.0	140.0	51.8	60.4	77.7	47.1	60.6	74.1	121.6	140.0	140.0
54-1/4		84.9	113.3	124.5	124.5	124.5	124.5	53.7	61.4	76.8	47.9	59.9	71.9	124.5	124.5	124.5
60-1/4		76.5	102.0	112.1	112.1	112.1	112.1	48.4	55.3	69.1	43.1	53.9	64.7	112.1	112.1	112.1
24-1/4	102	119.2	140.0	140.0	140.0	140.0	140.0	80.8	97.0	129.3	75.7	100.9	126.1	140.0	140.0	140.0
30-1/4		95.6	140.0	140.0	140.0	140.0	140.0	64.8	77.7	103.6	60.7	80.9	101.1	140.0	140.0	140.0
36-1/4		99.7	139.6	140.0	140.0	140.0	140.0	64.9	75.7	97.3	59.0	75.9	92.8	140.0	140.0	140.0
42-1/4		85.5	119.8	140.0	126.3	140.0	140.0	55.7	64.9	83.5	50.7	65.1	79.6	130.7	140.0	140.0
48-1/4		74.9	104.9	134.8	110.6	140.0	140.0	48.7	56.9	73.1	44.4	57.0	69.7	114.4	140.0	140.0
54-1/4		79.9	106.6	124.5	118.0	124.5	124.5	50.6	57.8	72.2	45.1	56.4	67.6	122.1	124.5	124.5
60-1/4		72.0	90.0	90.0	90.0	90.0	90.0	45.5	52.0	65.0	40.6	50.8	60.9	90.0	90.0	90.0
24-1/4	108	112.6	140.0	140.0	140.0	140.0	140.0	76.3	91.6	122.1	71.5	95.3	119.1	140.0	140.0	140.0
30-1/4		90.3	135.4	140.0	133.3	140.0	140.0	61.2	73.4	97.9	57.3	76.4	95.5	140.0	140.0	140.0
36-1/4		94.2	131.8	140.0	139.0	140.0	140.0	61.3	71.5	91.9	55.8	71.7	87.6	140.0	140.0	140.0
42-1/4		80.8	113.1	140.0	119.3	140.0	140.0	52.6	61.3	78.8	47.8	61.5	75.2	123.4	140.0	140.0
48-1/4		70.7	99.0	127.3	104.5	140.0	140.0	46.0	53.7	69.0	41.9	53.9	65.8	108.0	140.0	140.0
54-1/4		75.5	90.0	90.0	90.0	90.0	90.0	47.8	54.6	68.2	42.6	53.2	63.9	90.0	90.0	90.0
60-1/4		68.0	90.0	90.0	90.0	90.0	90.0	43.0	49.1	61.4	38.3	47.9	57.5	90.0	90.0	90.0
24-1/4	114	106.7	140.0	140.0	140.0	140.0	140.0	72.3	86.8	115.7	67.7	90.3	112.8	140.0	140.0	140.0
30-1/4		85.5	128.3	140.0	126.3	140.0	140.0	58.0	69.6	92.7	54.3	72.4	90.4	130.6	140.0	140.0
36-1/4		89.2	124.9	140.0	131.7	140.0	140.0	58.0	67.7	87.1	52.8	67.9	83.0	136.2	140.0	140.0
42-1/4		76.5	107.2	137.8	113.0	140.0	140.0	49.8	58.1	74.7	45.3	58.3	71.2	116.9	140.0	140.0
48-1/4		67.0	93.8	120.6	99.0	138.5	140.0	43.6	50.9	65.4	39.7	51.0	62.4	102.4	140.0	140.0
54-1/4		71.5	90.0	90.0	90.0	90.0	90.0	45.2	51.7	64.6	40.3	50.4	60.5	90.0	90.0	90.0
60-1/4		64.4	85.9	90.0	90.0	90.0	90.0	40.7	46.6	58.2	36.3	45.4	54.5	90.0	90.0	90.0
24-1/4	120	101.3	140.0	140.0	140.0	140.0	140.0	68.7	82.4	109.9	64.3	85.7	107.2	140.0	140.0	140.0
30-1/4		81.2	121.9	140.0	120.0	140.0	140.0	55.1	66.1	88.1	51.6	68.7	85.9	124.1	140.0	140.0
36-1/4		84.7	118.6	140.0	125.1	140.0	140.0	55.1	64.3	82.7	50.2	64.5	78.9	129.4	140.0	140.0
42-1/4		72.7	101.8	130.9	107.4	140.0	140.0	47.3	55.2	71.0	43.1	55.4	67.7	111.1	140.0	140.0
48-1/4		63.7	89.1	114.6	94.0	131.6	140.0	41.4	48.3	62.1	37.7	48.5	59.3	97.2	136.1	140.0
54-1/4		68.0	90.6	90.0	90.0	90.0	90.0	43.0	49.1	61.4	38.3	47.9	57.5	90.0	90.0	90.0
60-1/4		61.2	81.6	90.0	90.0	90.0	90.0	38.7	44.2	55.3	34.5	43.1	51.8	90.0	90.0	90.0

INTERPOLATION BETWEEN WIDTHS AND HEIGHTS ACCEPTABLE

NOTE:
SEE SHEET 8 FOR ANCHOR TYPES AND DETAILS.
ANCHOR CAPACITIES LISTED ON THIS SHEET TO BE USED IN CONJUNCTION WITH GLASS/REINFORCING AND MULLION CHARTS IN THIS DOCUMENT.
LOWER APPLICABLE VALUES CONTROL.

PRODUCT REVISED
as complying with the Florida Building Code
Acceptance No 15-0413.04
Expiration Date 6/26/2017
By
Miami Dade Product Control

DEC 23 2015

Engr: JAVAD AHMAD
CIVIL
FLA. PE # 70592
C.A.N. 3538

AL-FAROOQ CORPORATION
ENGINEERS & PRODUCT DEVELOPMENT
9360 SUNSET DRIVE, SUITE 220
MIAMI, FLORIDA 33173
TEL. (305) 264-8100 FAX. (305) 262-6978

COMP-ANL\W09-59CGI

SERIES-560 ALUM SLIDING GLASS DOOR (S.M.I.)

CGI Windows and Doors, Inc.
10100 N.W. 25TH STREET
MIAMI, FL. 33172
TEL. (305) 593-6590 FAX. (305) 593-6592

revisions:

no	date	by	description
A	03.23.12		UPDATED TO 2010 FBC
B	03.03.15		UPDATED TO 2014 FBC
C	05.04.15		NO CHANGE THIS SHEET
D	11.30.15		REV. PER RER COMMENTS
E	12.23.15		REV. PER RER COMMENTS

date: 11-10-09
scale: -
dr. by: HAMID
chk. by:

drawing no.
W09-59

DESIGN LOAD CAPACITY - PSF (ANCHORS AT HEAD/SILL)

PANEL WIDTH INCHES	DOOR FRAME HEIGHT INCHES	ANCHORS TYPE 'D' 1/4" SHIM SPACE			ANCHORS TYPE 'D' & 'E' 3/8" SHIM SPACE			ANCHORS TYPE 'D' & 'E' 1/2" SHIM SPACE			ANCHORS TYPE 'E' 1/4" SHIM SPACE		
		2 PAIRS	3 PAIRS	4 PAIRS	2 PAIRS	3 PAIRS	4 PAIRS	2 PAIRS	3 PAIRS	4 PAIRS	2 PAIRS	3 PAIRS	4 PAIRS
24-1/4	80	140.0	140.0	140.0	110.3	132.3	140.0	87.0	104.5	139.3	140.0	140.0	140.0
30-1/4		131.0	140.0	140.0	88.4	106.1	140.0	69.8	83.7	111.6	140.0	140.0	140.0
36-1/4		136.6	140.0	140.0	88.5	103.3	132.8	69.9	81.5	104.8	140.0	140.0	140.0
42-1/4		117.2	140.0	140.0	76.0	88.6	113.9	60.0	69.9	89.9	140.0	140.0	140.0
48-1/4		102.6	140.0	140.0	66.5	77.6	99.8	52.5	61.2	78.7	140.0	140.0	140.0
54-1/4		109.5	124.5	124.5	69.0	78.9	98.6	54.5	62.3	77.8	124.5	124.5	124.5
60-1/4		98.6	112.1	112.1	62.1	71.0	88.8	49.0	56.1	70.1	112.1	112.1	112.1
24-1/4	84	140.0	140.0	140.0	107.7	129.2	140.0	85.0	102.0	136.0	140.0	140.0	140.0
30-1/4		127.8	140.0	140.0	86.3	103.6	138.1	68.1	81.7	109.0	140.0	140.0	140.0
36-1/4		133.4	140.0	140.0	86.4	100.8	129.6	68.2	79.6	102.3	140.0	140.0	140.0
42-1/4		114.4	140.0	140.0	74.2	86.5	111.2	58.5	68.3	87.8	140.0	140.0	140.0
48-1/4		100.2	140.0	140.0	64.9	75.8	97.4	51.2	59.8	76.9	140.0	140.0	140.0
54-1/4		106.9	124.5	124.5	67.4	77.0	96.3	53.2	60.8	76.0	124.5	124.5	124.5
60-1/4		96.3	112.1	112.1	60.7	69.3	86.7	47.9	54.7	68.4	112.1	112.1	112.1
24-1/4	90	140.0	140.0	140.0	100.5	120.6	140.0	79.3	95.2	126.9	140.0	140.0	140.0
30-1/4		119.3	140.0	140.0	80.6	96.7	128.9	63.6	76.3	101.7	140.0	140.0	140.0
36-1/4		124.5	140.0	140.0	80.7	94.1	121.0	63.7	74.3	95.5	140.0	140.0	140.0
42-1/4		106.8	140.0	140.0	69.2	80.7	103.8	54.6	63.7	81.9	140.0	140.0	140.0
48-1/4		93.5	130.9	140.0	60.6	70.7	90.9	47.8	55.8	71.7	140.0	140.0	140.0
54-1/4		99.8	124.5	124.5	62.9	71.9	89.8	49.6	56.7	70.9	124.5	124.5	124.5
60-1/4		89.9	112.1	112.1	56.6	64.7	80.9	44.7	51.1	63.8	112.1	112.1	112.1
24-1/4	96	139.5	140.0	140.0	94.2	113.0	140.0	74.4	89.2	119.0	140.0	140.0	140.0
30-1/4		111.9	140.0	140.0	75.5	90.6	120.8	59.6	71.5	95.4	140.0	140.0	140.0
36-1/4		116.7	140.0	140.0	75.6	88.2	113.4	59.7	69.6	89.5	140.0	140.0	140.0
42-1/4		100.1	140.0	140.0	64.9	75.7	97.3	51.2	59.7	76.8	140.0	140.0	140.0
48-1/4		87.7	122.7	140.0	56.8	66.3	85.2	44.8	52.3	67.3	135.8	140.0	140.0
54-1/4		93.6	124.5	124.5	59.0	67.4	84.2	46.5	53.2	66.5	124.5	124.5	124.5
60-1/4		84.2	112.1	112.1	53.1	60.7	75.8	41.9	47.9	59.9	112.1	112.1	112.1
24-1/4	102	131.3	140.0	140.0	88.7	106.4	140.0	70.0	84.0	112.0	140.0	140.0	140.0
30-1/4		105.3	140.0	140.0	71.1	85.3	113.7	56.1	67.3	89.8	140.0	140.0	140.0
36-1/4		109.8	140.0	140.0	71.2	83.0	106.8	56.2	65.5	84.3	140.0	140.0	140.0
42-1/4		94.2	131.9	140.0	61.1	71.2	91.6	48.2	56.2	72.3	140.0	140.0	140.0
48-1/4		82.5	115.5	140.0	53.5	62.4	80.2	42.2	49.2	63.3	127.8	140.0	140.0
54-1/4		88.1	117.4	124.5	55.5	63.4	79.3	43.8	50.0	62.6	124.5	124.5	124.5
60-1/4		79.3	90.0	90.0	50.0	57.1	71.4	39.4	45.1	56.3	90.0	90.0	90.0
24-1/4	108	124.0	140.0	140.0	83.7	100.5	134.0	66.1	79.3	105.7	140.0	140.0	140.0
30-1/4		99.4	140.0	140.0	67.1	80.6	107.4	53.0	63.6	84.8	140.0	140.0	140.0
36-1/4		103.7	140.0	140.0	67.2	78.4	100.8	53.1	61.9	79.6	140.0	140.0	140.0
42-1/4		89.0	124.6	140.0	57.7	67.3	86.5	45.5	53.1	68.3	137.8	140.0	140.0
48-1/4		77.9	109.1	140.0	50.5	58.9	75.8	39.9	46.5	59.8	120.7	140.0	140.0
54-1/4		83.2	90.0	90.0	52.4	59.9	74.9	41.4	47.3	59.1	90.0	90.0	90.0
60-1/4		74.9	90.0	90.0	47.2	53.9	67.4	37.2	42.6	53.2	90.0	90.0	90.0
24-1/4	114	117.2	140.0	140.0	79.3	95.2	126.9	62.6	75.1	100.2	140.0	140.0	140.0
30-1/4		94.2	140.0	140.0	63.6	76.3	101.8	50.2	60.2	80.3	140.0	140.0	140.0
36-1/4		98.3	137.6	140.0	63.7	74.3	95.5	50.3	58.6	75.4	140.0	140.0	140.0
42-1/4		84.3	118.0	140.0	54.6	63.7	82.0	43.1	50.3	64.7	130.6	140.0	140.0
48-1/4		73.8	103.4	132.9	47.8	55.8	71.8	37.8	44.1	56.6	114.4	133.4	140.0
54-1/4		78.8	90.0	90.0	49.6	56.7	70.9	39.2	44.8	56.0	90.0	90.0	90.0
60-1/4		70.9	90.0	90.0	44.7	51.1	63.9	35.3	40.3	50.4	90.0	90.0	90.0
24-1/4	120	111.6	140.0	140.0	75.4	90.4	120.6	59.5	71.4	95.2	140.0	140.0	140.0
30-1/4		89.5	134.2	140.0	60.4	72.5	96.7	47.7	57.2	76.3	140.0	140.0	140.0
36-1/4		93.4	130.7	140.0	60.5	70.6	90.7	47.7	55.7	71.6	140.0	140.0	140.0
42-1/4		80.1	112.1	140.0	51.9	60.6	77.9	41.0	47.8	61.5	124.1	140.0	140.0
48-1/4		70.1	98.2	126.2	45.5	53.0	68.2	35.9	41.9	53.8	108.6	126.7	140.0
54-1/4		74.9	90.0	90.0	47.2	53.9	67.4	37.2	42.5	53.2	90.0	90.0	90.0
60-1/4		67.4	89.9	90.0	42.5	48.5	60.7	33.5	38.3	47.9	90.0	90.0	90.0

INTERPOLATION BETWEEN WIDTHS AND HEIGHTS ACCEPTABLE

NOTE:
SEE SHEET 8 FOR ANCHOR TYPES AND DETAILS.
ANCHOR CAPACITIES LISTED ON THIS SHEET TO BE USED IN CONJUNCTION WITH GLASS/REINFORCING AND MULLION CHARTS IN THIS DOCUMENT.
LOWER APPLICABLE VALUES CONTROL.

PRODUCT REVISED
as complying with the Florida Building Code
Acceptance No 15-0413.04
Expiration Date 6/26/2017
By
Miami Dade Product Control

DEC 23 2015

Engr: JAVAD AHMAD
CIVIL
FLA. PE # 70592
C.A.N. 3538

AL-FAROOQ CORPORATION
ENGINEERS & PRODUCT DEVELOPMENT
9360 SUNSET DRIVE, SUITE 220
MIAMI, FLORIDA 33173
TEL. (305) 264-8100 FAX. (305) 262-6978
COMP-ANL\W09-59CGI

SERIES-560 ALUM SLIDING GLASS DOOR (S.M.I.)

CGI Windows and Doors, Inc.
10100 N.W. 25TH STREET
MIAMI, FL. 33172
TEL. (305) 593-6590 FAX. (305) 593-6592

revisions:

no	date	by	description
A	03.23.12		UPDATED TO 2010 FBC
B	03.03.15		UPDATED TO 2014 FBC
C	05.04.15		NO CHANGE THIS SHEET
D	11.30.15		REV. PER RER COMMENTS
E	12.23.15		REV. PER RER COMMENTS

date: 11-10-09
scale: -
dr. by: HAMID
chk. by:

drawing no.
W09-59

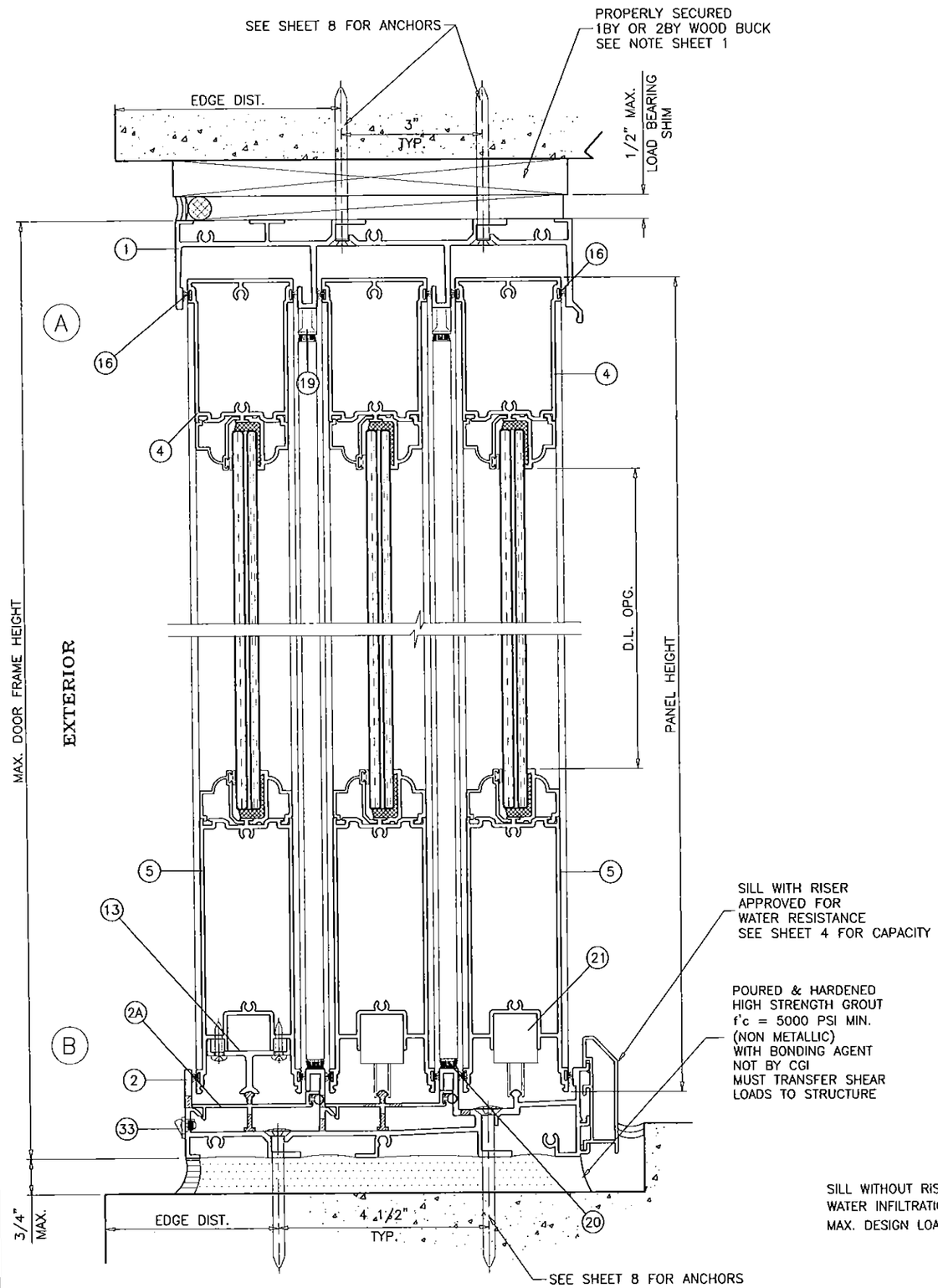

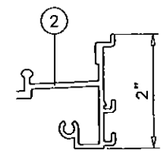

SILL WITHOUT RISER NOT APPROVED FOR INSTALLATIONS WHERE WATER INFILTRATION RESISTANCE IS REQUIRED.
MAX. DESIGN LOAD FOR THIS SILL IS THE SAME AS 4-1/4" RISER.

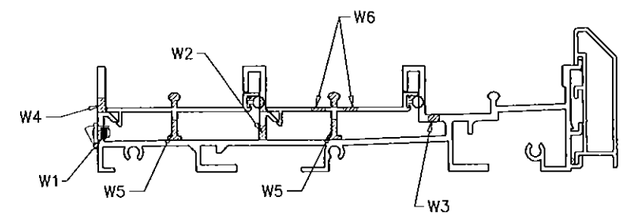

WEEPS:

W1 = .30" X 1-5/8" WEEP SLOTS WITH PLASTIC COVER AT 9" FROM EACH END AND ±48" O.C.

W2 = 1/4" X 2" WEEP SLOTS AT 4" FROM EACH END AND ±12" O.C.

W3 = 1/4" X 5/8" WEEP HOLES AT 9" FROM EACH END AND ±48" O.C.

W4 = 1/4" X 2" WEEP SLOTS AT 4" FROM EACH END AND ±12" O.C.

W5 = .35" X 5/8" WEEP HOLES AT ±18" O.C.

W6 = 1/4" X 5/8" WEEP HOLES AT ±18" O.C.

Engr: JAVAD AHMAD
CIVIL
FLA. PE # 70592
C.A.N. 3538

PRODUCT REVISED
as complying with the Florida
Building Code
Acceptance No 15-0413.04
Expiration Date 6/26/2017
By
Miami Dade Product Control

DEC 23 2015

AL-FAROOQ CORPORATION
ENGINEERS & PRODUCT DEVELOPMENT
9360 SUNSET DRIVE, SUITE 220
MIAMI, FLORIDA 33173
TEL. (305) 264-8100 FAX. (305) 262-6978

COMP-ANL\W09-59CGI

SERIES-560 ALUM SLIDING GLASS DOOR (S.M.I.)

CGI Windows and Doors, Inc.
10100 N.W. 25TH STREET
MIAMI, FL. 33172
TEL. (305) 593-6590 FAX. (305) 593-6592

revisions:

no	date	by	description
A	03.23.12		NO CHANGE THIS SHEET
B	03.03.15		UPDATED TO 2014 FBC
C	05.04.15		NO CHANGE THIS SHEET
D	11.30.15		REV. PER RER COMMENTS
E	12.23.15		REV. PER RER COMMENTS

date: 11-10-09
scale: 3/8" = 1"
dr. by: HAMID
chk. by:

drawing no.
W09-59

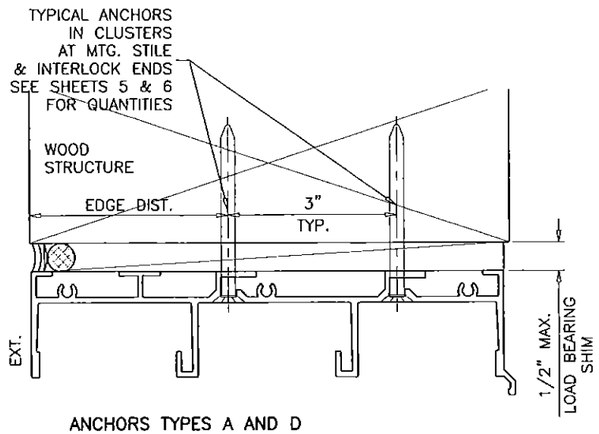

ANCHORS TYPES A AND D
INTO WOOD STRUCTURES

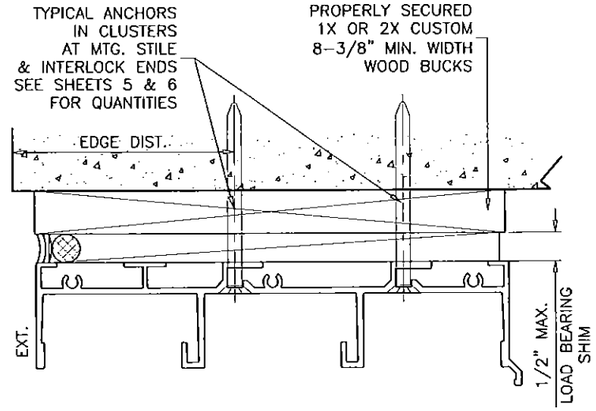

ANCHORS TYPES A AND D
THRU PROPERLY SECURED 1BY OR 2BY WOOD BUCKS
INTO 3 KSI CONCRETE

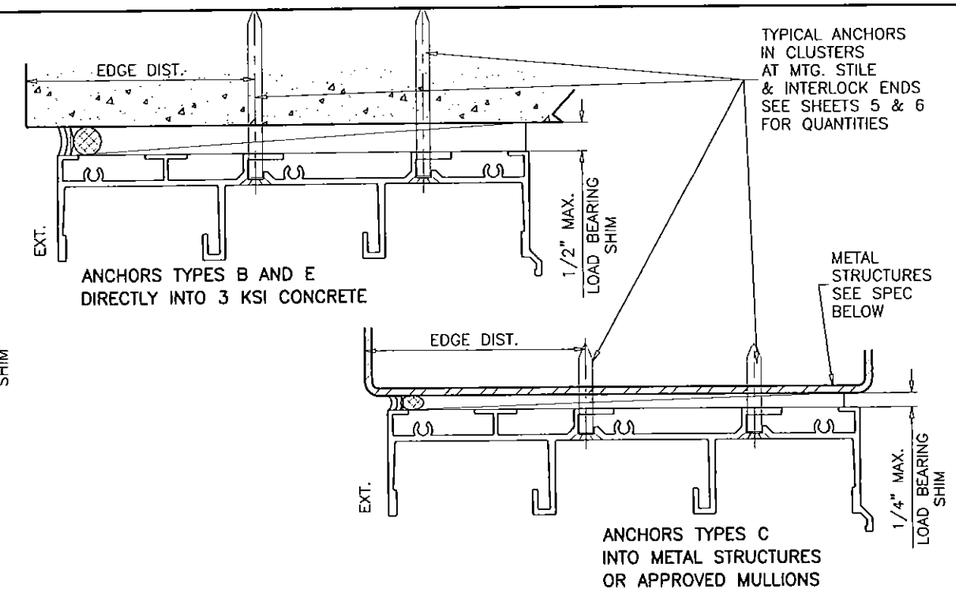

ANCHORS TYPES B AND E
DIRECTLY INTO 3 KSI CONCRETE

ANCHORS TYPES C
INTO METAL STRUCTURES
OR APPROVED MULLIONS

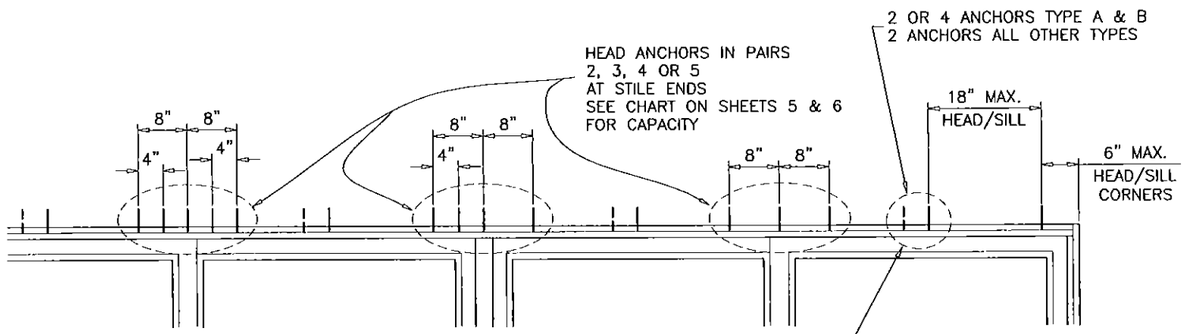

INTERMEDIATE HEAD ANCHORS
USE TYPICAL ANCHOR SPACING
(2) ANCHORS IN PAIR
LIMIT LOADS TO 80 PSF FOR TYPES A & B
LIMIT LOADS TO 170 PSF FOR ALL OTHER TYPES
(4) ANCHORS IN CLUSTER
LIMIT LOADS TO 170 PSF FOR TYPES A & B

ANCHORS TYPES B & E
DIRECTLY INTO 3 KSI CONCRETE

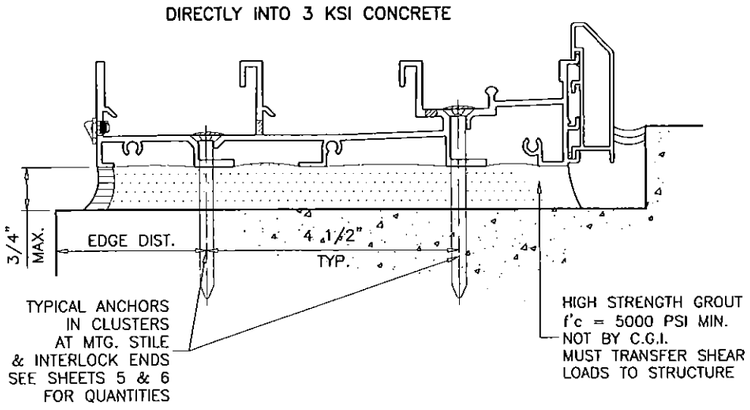

WOOD BUCKS AND METAL STRUCTURES NOT BY CGI WINDOWS MUST SUSTAIN LOADS IMPOSED BY GLAZING SYSTEM AND TRANSFER THEM TO THE BUILDING STRUCTURE.

TYPICAL ANCHORS: SEE ELEV. FOR SPACING

TYPE 'A' – 1/4" DIA. ULTRACON BY 'ELCO' (Fu=177 KSI, Fy=155 KSI)
INTO WOOD STRUCTURES
WITH 2" MIN. PENETRATION INTO WOOD (HEAD/JAMBS)
THRU 1BY OR 2BY WOOD BUCKS INTO CONC. OR MASONRY
WITH 1-1/4" MIN. EMBED INTO CONCRETE (HEAD/JAMBS)
WITH 1-1/4" MIN. EMBED INTO MASONRY (JAMBS)

TYPE 'B' – 1/4" DIA. ULTRACON BY 'ELCO' (Fu=177 KSI, Fy=155 KSI)
DIRECTLY INTO CONC. OR MASONRY
2" MIN. EMBED INTO CONCRETE (HEAD/SILL/JAMBS)
2" MIN. EMBED INTO GROUT FILLED BLOCKS (JAMBS)

TYPE 'C' – #14 SMS OR SELF DRILLING SCREWS (GRADE 2 CRS)
INTO METAL STRUCTURES
STEEL : 1/8" THK. MIN. (Fy = 36 KSI MIN.) (Fu = 58 KSI)
ALUMINUM : 1/8" THK. MIN. (6063-T5 MIN.) (Fu = 22 KSI)
(STEEL IN CONTACT WITH ALUMINUM TO BE PLATED OR PAINTED)

TYPE 'D' – 1/4" DIA HILTI KWIK-CON II (Fu=138 KSI, Fy=137 KSI)
INTO WOOD STRUCTURES
WITH 2" MIN. PENETRATION INTO WOOD (HEAD/JAMBS)
THRU 1BY OR 2BY WOOD BUCKS INTO CONC. OR MASONRY
WITH 1-1/4" MIN. EMBED INTO CONCRETE (HEAD/JAMBS)
WITH 1-1/4" MIN. EMBED INTO MASONRY (JAMBS)

TYPE 'E' – 1/4" DIA HILTI KWIK-CON II (Fu=138 KSI, Fy=137 KSI)
DIRECTLY INTO CONC. OR MASONRY
WITH 2" MIN. EMBED INTO CONCRETE (HEAD/SILL/JAMBS)
WITH 2" MIN. EMBED INTO GROUT FILLED BLOCKS (JAMBS)

ANCHOR EDGE DISTANCES (UNLESS OTHERWISE NOTED)
INTO CONCRETE AND MASONRY = 2-1/2" MIN.
INTO WOOD STRUCTURE = 1" MIN.
INTO METAL STRUCTURE = 1/2" MIN.

WOOD AT HEAD OR JAMBS SG = 0.55 MIN.
CONCRETE AT HEAD, SILL OR JAMBS f'c = 3000 PSI MIN.
C-90 HOLLOW/FILLED BLOCK AT JAMBS f'm = 2000 PSI MIN.

PRODUCT REVISED
as complying with the Florida
Building Code
Acceptance No 15-0413.04
Expiration Date 6/26/2017
By
Miami Dade Product Control

Engr: JAVAD AHMAD
CIVIL
FLA. PE # 70592
C.A.N. 3538

DEC 23 2015

AL-FAROOQ CORPORATION
ENGINEERS & PRODUCT DEVELOPMENT
9360 SUNSET DRIVE, SUITE 220
MIAMI, FLORIDA 33173
TEL. (305) 264-8100 FAX. (305) 262-6978

COMP-ANL\W09-59CGI

SERIES-560 ALUM SLIDING GLASS DOOR (S.M.I.)

CGI Windows and Doors, Inc.
10100 N.W. 25TH STREET
MIAMI, FL. 33172
TEL. (305) 593-6590 FAX. (305) 593-6592

revisions:

no	date	by	description
A	03.23.12		UPDATED TO 2010 FBC
B	03.03.15		UPDATED TO 2014 FBC
C	05.04.15		NO CHANGE THIS SHEET
D	11.30.15		REV. PER RER COMMENTS
E	12.23.15		REV. PER RER COMMENTS

date: 11-10-09
scale: 3/8" = 1"
dr. by: HAMID
chk. by:

drawing no.
W09-59

sheet 8 of 13

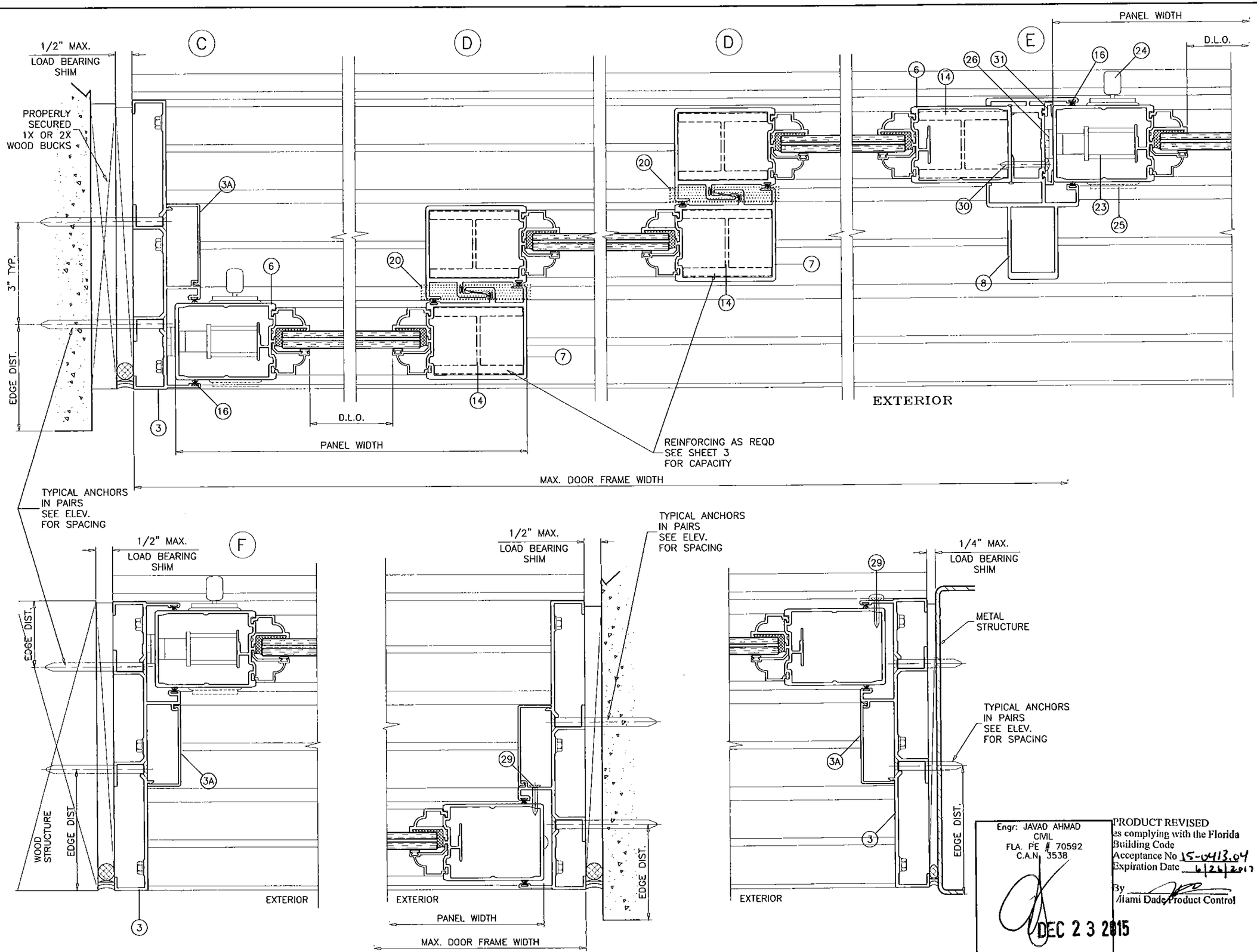

Engr: JAVAD AHMAD
CIVIL
FLA. PE # 70592
C.A.N. 3538

PRODUCT REVISED
as complying with the Florida Building Code
Acceptance No 15-0413.04
Expiration Date 6/26/2017
By
Miami Dade Product Control

DEC 23 2015

AL-FAROOQ CORPORATION
ENGINEERS & PRODUCT DEVELOPMENT
9360 SUNSET DRIVE, SUITE 220
MIAMI, FLORIDA 33173
TEL. (305) 264-8100 FAX. (305) 262-6978

COMP-ANL\W09-59CGI

SERIES-560 ALUM SLIDING GLASS DOOR (S.M.I.)

CGI Windows and Doors, Inc.
10100 N.W. 25TH STREET
MIAMI, FL. 33172
TEL. (305) 593-6590 FAX. (305) 593-6592

revisions:

no	date	by	description
A	03.23.12		NO CHANGE THIS SHEET
B	03.03.15		UPDATED TO 2014 FBC
C	05.04.15		NO CHANGE THIS SHEET
D	11.30.15		REV. PER RER COMMENTS
E	12.23.15		REV. PER RER COMMENTS

date: 11-10-09
scale: 3/8" = 1"
dr. by: HAMID
chk. by:

drawing no.
W09-59

sheet 9 of 13

POCKET HOOK ANCHOR CAPACITY – PSF

ANCHORS TYPE	SUBSTRATE	MIN. EMBED.	MIN. EDGE DIST.	PANEL WIDTHS 36–1/4"	42–1/4"	48–1/4"	54–1/4"	60–1/4"
1/4" DIA. ULTRACONS BY 'ELCO' (Fu=177 KSI, Fy=155 KSI)	MASONRY	1–1/4"	1"	55.8	47.9	41.9	37.3	33.6
	CONCRETE	1–3/4"	1"	140.0	140.0	137.8	122.5	110.3
#14 SMS (GRADE 2 OR 5 CRS)	WOOD	1–3/4"	3/4"	140.0	140.0	131.0	116.5	104.9

ABOVE CHART IS FOR 12" TYP. ANCHOR SPACING
FOR 6" SPACING MULTIPLY CAPACITY X2.

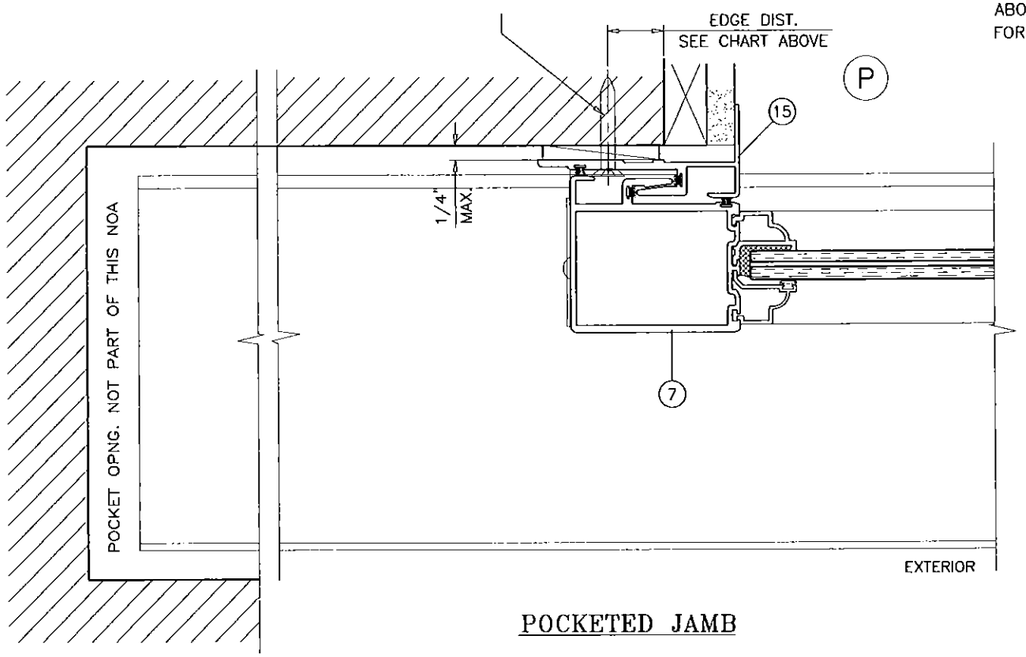

POCKETED JAMB

Engr: JAVAD AHMAD
CIVIL
FLA. PE # 70592
C.A.N. 3538

DEC 23 2015

PRODUCT REVISED
as complying with the Florida
Building Code
Acceptance No 15-0413.04
Expiration Date 6/26/2017
By
Miami Dade Product Control

AL-FAROOQ CORPORATION
ENGINEERS & PRODUCT DEVELOPMENT
9360 SUNSET DRIVE, SUITE 220
MIAMI, FLORIDA 33173
TEL. (305) 264-8100 FAX. (305) 262-6978
COMP-ANL\W09-59CGI

SERIES-560 ALUM SLIDING GLASS DOOR (S.M.I.)

CGI Windows and Doors, Inc.
10100 N.W. 25TH STREET
MIAMI, FL. 33172
TEL. (305) 593-6590 FAX. (305) 593-6592

revisions:

no	date	by	description
A	03.23.12		NO CHANGE THIS SHEET
B	03.03.15		UPDATED TO 2014 FBC
C	05.04.15		NO CHANGE THIS SHEET
D	11.30.15		REV. PER RER COMMENTS
E	12.23.15		REV. PER RER COMMENTS

date: 11-10-09
scale: 3/8" = 1"
dr. by: HAMID
chk. by:

drawing no.
W09-59

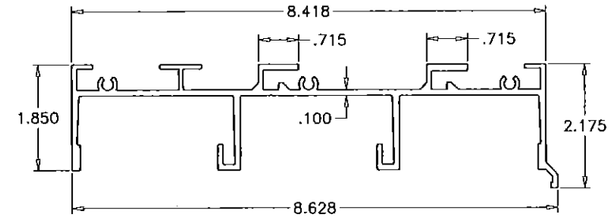

1 FRAME HEAD

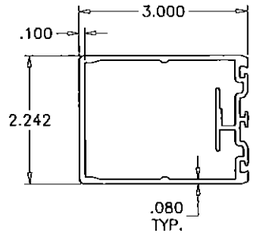

6 JAMB/LOCK STILE

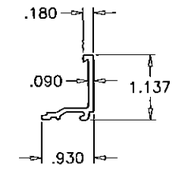

12 INSUL. GLASS ADAPTER

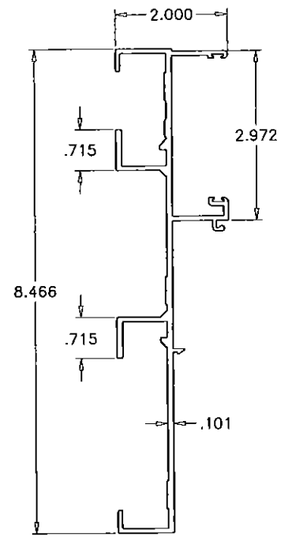

3A FRAME JAMB

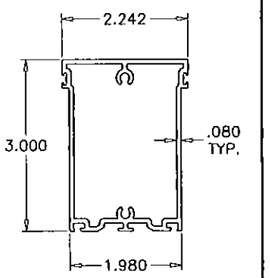

4 TOP RAIL

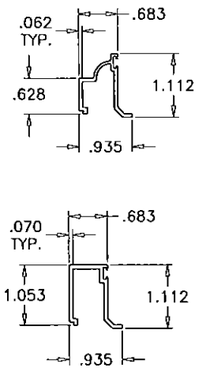

10 10A GLAZING BEADS

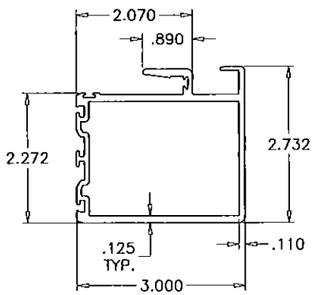

7 INTERLOCK STILE

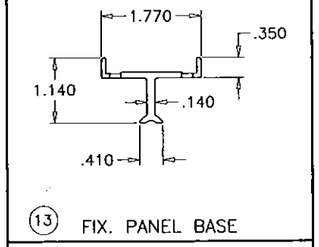

13 FIX. PANEL BASE

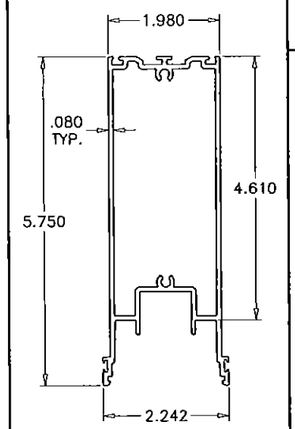

5 BOTTOM RAIL

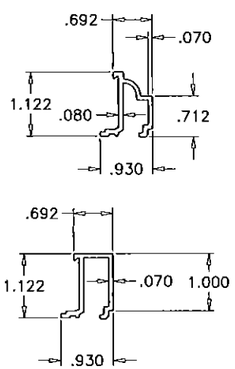

11 11A GLASS ADAPTERS

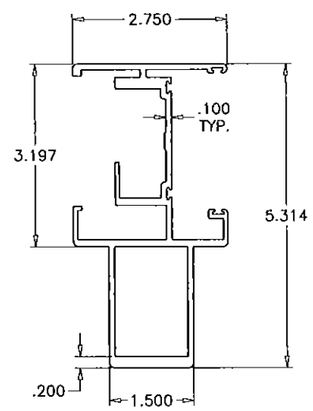

8 ASTRAGAL STILE

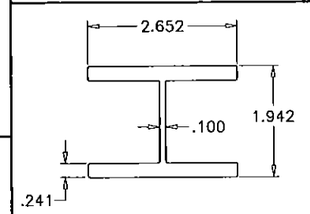

14 STILE REINFORCING

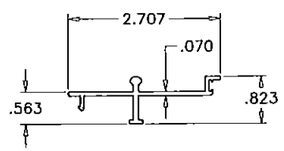

16 TRACK INSERT

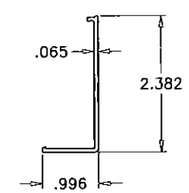

17 JAMB COVER

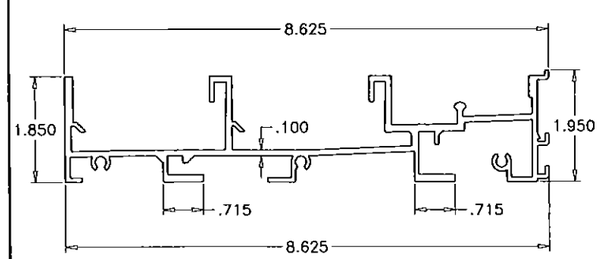

2 FRAME SILL

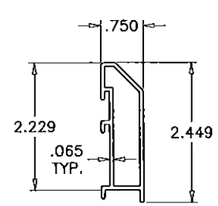

9 SILL RISER (STANDARD)

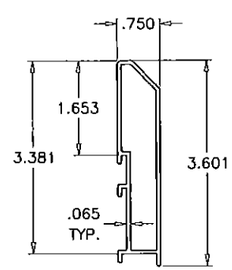

9A SILL RISER (HI-RISE)

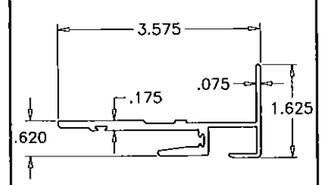

15 POCKET DOOR HOOK

Engr: JAVAD AHMAD
CIVIL
FLA. PE # 70592
C.A.N. 3538

DEC 23 2015

PRODUCT REVISED
as complying with the Florida
Building Code
Acceptance No 15-0413.04
Expiration Date 6/26/2017
By
Miami Dade Product Control

AL-FAROOQ CORPORATION
ENGINEERS & PRODUCT DEVELOPMENT
9360 SUNSET DRIVE, SUITE 220
MIAMI, FLORIDA 33173
TEL. (305) 264-8100 FAX. (305) 262-6978
COMP-ANL\W09-59CGI

SERIES-560 ALUM SLIDING GLASS DOOR (S.M.I.)

CGI Windows and Doors, Inc.
10100 N.W. 25TH STREET
MIAMI, FL. 33172
TEL. (305) 593-6590 FAX. (305) 593-6592

revisions:

no	date	by	description
A	03.23.12		NO CHANGE THIS SHEET
B	03.03.15		UPDATED TO 2014 FBC
C	05.04.15		NO CHANGE THIS SHEET
D	11.30.15		REV. PER RER COMMENTS
E	12.23.15		NO CHANGE THIS SHEET

date: 11-10-09
scale: 3/8" = 1"
dr. by: HAMID
chk. by:

drawing no.
W09-59

ITEM #	PART #	QUANTITY	DESCRIPTION	MATERIAL	MANF./SUPPLIER/REMARKS
1	CGI-572	1	FRAME HEAD	6063-T6	-
2	CGI-573	1	FRAME SILL	6063-T6	-
2A	CGI-575	AS REQD.	TRACK INSERT	6063-T6	-
3	CGI-574	2	FRAME JAMB	6063-T6	-
3A	CGI-576	AS REQD.	JAMB COVER	6063-T5	-
4	CGI-555	1/ PANEL	TOP RAIL	6063-T6	-
5	CGI-556	1/ PANEL	BOTTOM RAIL	6063-T6	-
6	CGI-557	2/ PANEL	JAMB/LOCK STILE	6063-T6	-
7	CGI-558	AS REQD.	INTERLOCK	6063-T6	-
8	CGI-559	AS REQD.	ASTRAGAL STILE	6063-T6	-
9	CGI-553	AS REQD.	SILL RISER (STANDARD)	6063-T5	-
9A	CGI-553	AS REQD.	SILL RISER (HI-RISE)	6063-T5	-
10	CGI-561	AS REQD.	GLAZING BEAD (COLONIAL)	6063-T5	-
10A	CGI-563	AS REQD.	GLAZING BEAD (SQUARE)	6063-T5	-
11	CGI-562	AS REQD.	GLASS ADAPTER (COLONIAL)	6063-T5	-
11A	CGI-564	AS REQD.	GLASS ADAPTER (SQUARE)	6063-T5	-
12	CGI-565	AS REQD.	GLASS ADAPTER (INSUL. LAM. GLASS)	6063-T6	-
13	CGI-585	2/ FIX. PANEL	FIX. PANEL BASE, 2" LONG	6063-T5	ATTACHED WITH #8 X 3/4" PH PH TEKS
14	CGI-560	AS REQD.	STILE REINFORCING	6063-T6	LENGTH = DOOR HT. - 14"
15	CGI-577	AS REQD.	POCKET DOOR HOOK	6063-T6	-
16	VARIES	VARIES	WOOL PILE WEATHERSTRIPPING WITH FIN	PILE	ULTRAFAB OR EQUAL	.187 BASE X .290 TRI-FIN (USED HORIZONTALLY) .187 BASE X .290 SINGLE CENTER FIN (USED VERTICALLY)
17	CGI-382V	VARIES	GLAZING BEAD BULB	VINYL	CUSTOM EXTRUDED	
18	SILICONE	VARIES	STRUCTURAL SILICONE	RUBBER	GE 1200 OR DOW 995	
19	CGI-584	1	ANTI-LIFT BLOCK	GL REINF NYLON	CUSTOM CGI PART	ABOVE INTERLOCK ATTACHED W/ (2) #10X1" SMS
20	CGI-586	1	ADHESIVE BACKED PILE PAD (.300" HIGH)	PILE	ULTRAFAB OR EQUAL	AT BOTTOM OF EACH INTERLOCK
21	TA-51 OR TA-84	2/ MOV. PANEL	TANDEM S/S ROLLER	S/S	BUILDERS HRDW. OR EQUAL	ATTACHED WITH #8 X 3/4" PH PH TEKS
23	CH-200	1	M.S. COMMERCIAL HOOK BOLT LOCK (CH-200)	S/S MECH.	CUSTOM PART	INCLUDES CGI-580 FACE PLATE TRIM W/ (1) S/S KEEPER (CGI-581)
24	CH-107	1	BRASS THUMBTURN	BRASS/ZINC	CUSTOM PART	1 REQUIRED PER HOOK BOLT
25	CH-109	OPT.	BRASS KEYED EXTERIOR CYLINDER	BRASS/ZINC	CUSTOM PART	OPTIONAL PART
26	CGI-581	1	.850 X 3.875 S/S KEEPER	S/S	CUSTOM PART	ATTACHED W/ (3) #10 X 1" TRUSS HEAD SMS
27	SCREW (FRAME)	12	#12 X 1 1/4" HEX HEAD S/S SMS	S/S	VARIOUS	3 SCREWS PER FRAME CORNER
28	SCREW (PANEL)	8	#10 X 1 1/4" PAN HEAD S/S SMS	S/S	VARIOUS	2 SCREWS PER PANEL CORNER
29	SCREW	2	#8 X 1 1/2" FLAT HEAD TEKS S/S	S/S	VARIOUS	(2) PER FIXED PANEL AT MAXIMUM OF 24" FROM TOP & BOTTOM MOUNTED ON PLASTIC COVER
30	SCREW	VARIES	#10 X 1 1/2" PAN HEAD TEKS S/S	S/S	VARIOUS	AT 6" FROM ENDS AND 24" ON CENTER MAX.
31	CGI-599	VARIES	RUBBER SEAL	RUBBER/FOAM	CUSTOM PART	
32	SIDELITE JAMB CLIP	1/SCREW	3" LONG CLIP (AT "O" CONFIGURATION)	ALUM	CUSTOM PART	CONSISTS OF 1/8 X 3 1/8 X 3" LG PLATE GLUED TO 3/4 X 1 1/2 X 1/8 THK X 3" LG. TUBE
33	HI-FLO WEEPER	VARIES	WEEP HOLE AND COVER	NYLON	PEP	1 WEEP AND COVER AT 9" FROM ENDS AND AT CENTER LINE OF INTERLOCK OR ASTRAGAL
34	-	2/ LITE	SETTING BLOCKS	EPDM	-	DUROMETER 85±5 SHORE A

SEALANTS:

ALL FRAME AND PANEL JOINT, INSTALLATION SCREWS AND HEADS OF ANCHOR SCREWS AT SILL TO BE SEALED WITH WHITE/ALUM COLORED SILICONE.

Engr: JAVAD AHMAD
CIVIL
FLA. PE # 70592
C.A.N. 3538

DEC 23 2015

PRODUCT REVISED
as complying with the Florida Building Code
Acceptance No 15-0413.04
Expiration Date 6/26/2017
By
Miami Dade Product Control

AL-FAROOQ CORPORATION
ENGINEERS & PRODUCT DEVELOPMENT
9360 SUNSET DRIVE, SUITE 220
MIAMI, FLORIDA 33173
TEL. (305) 264-8100 FAX. (305) 262-6978
COMP-ANL\W09-59CGI

SERIES-560 ALUM SLIDING GLASS DOOR (S.M.I.)

CGI Windows and Doors, Inc.
10100 N.W. 25TH STREET
MIAMI, FL. 33172
TEL. (305) 593-6590 FAX. (305) 593-6592

revisions:

no	date	by	description
A	03.23.12		NO CHANGE THIS SHEET
B	03.03.15		UPDATED TO 2014 FBC
C	05.04.15		NO CHANGE THIS SHEET
D	11.30.15		REV. PER RER COMMENTS
E	12.23.15		NO CHANGE THIS SHEET

date: 11-10-09
scale: 3/8" = 1"
dr. by: HAMID
chk. by:

drawing no.
W09-59

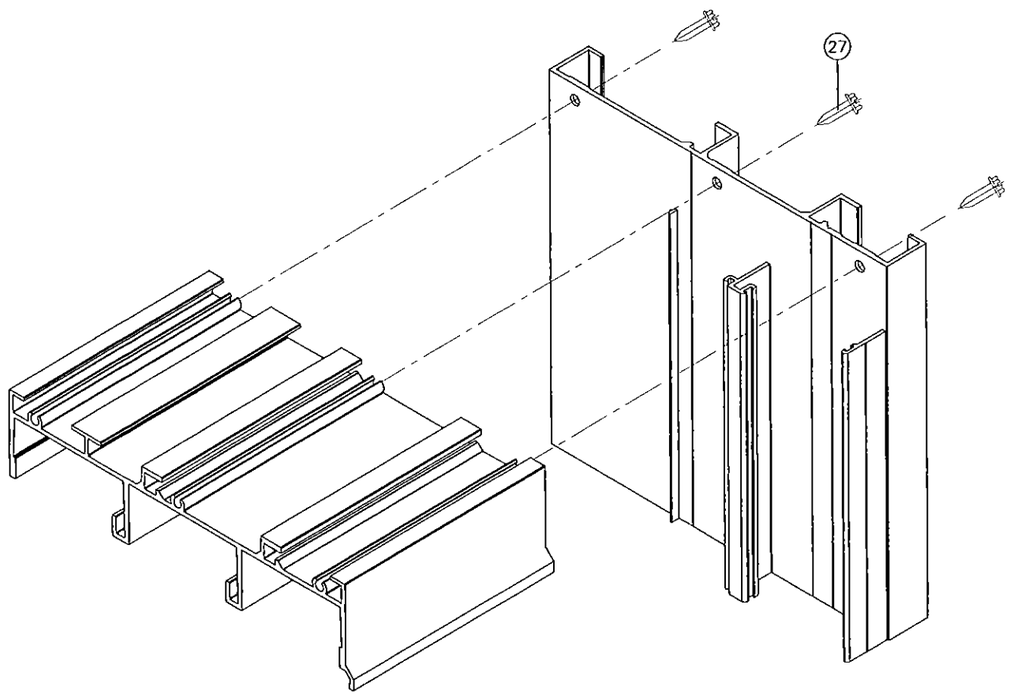

FRAME TOP CORNER

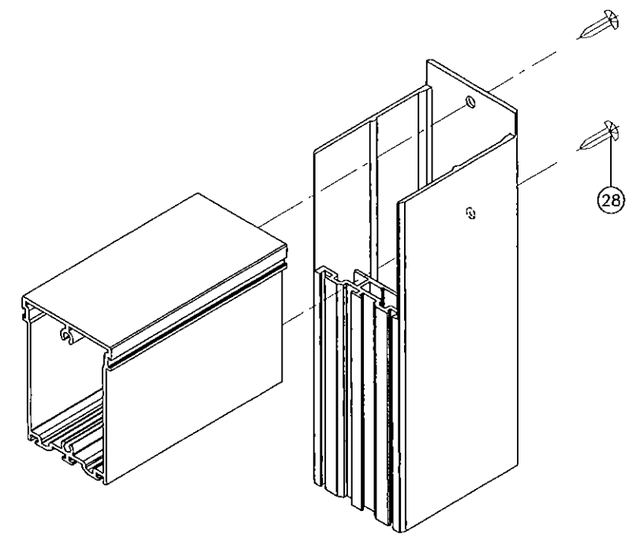

PANEL TOP CORNER

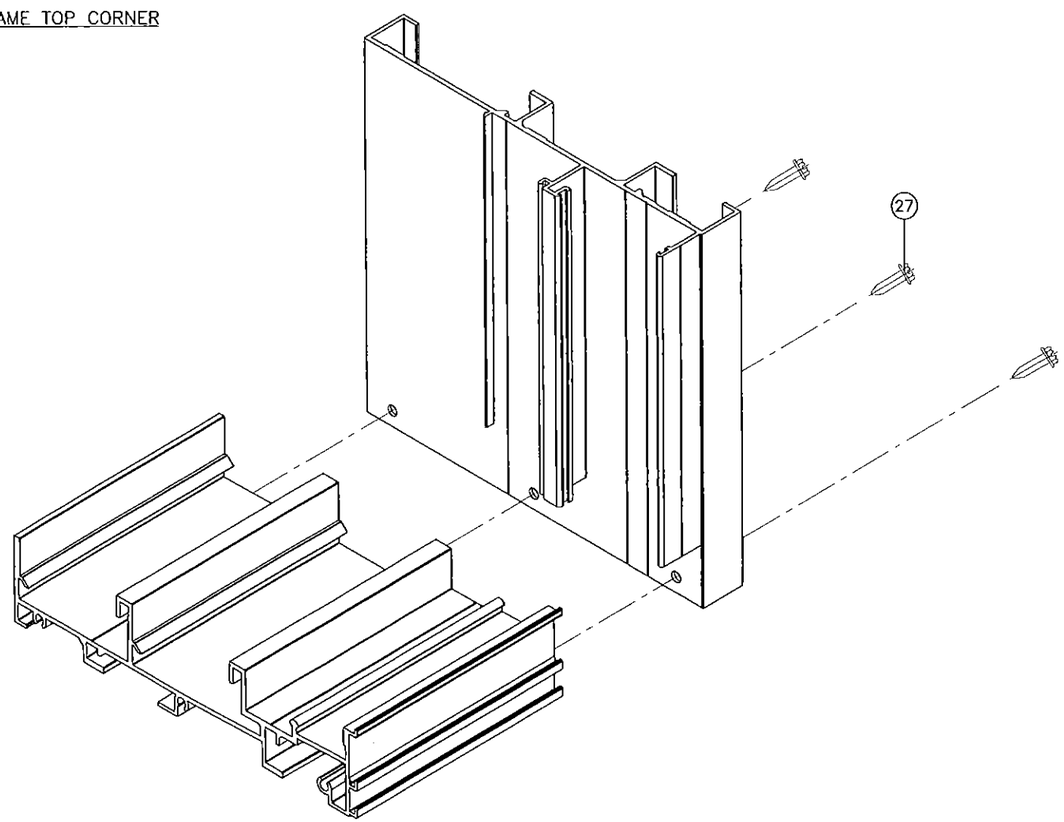

FRAME BOTTOM CORNER

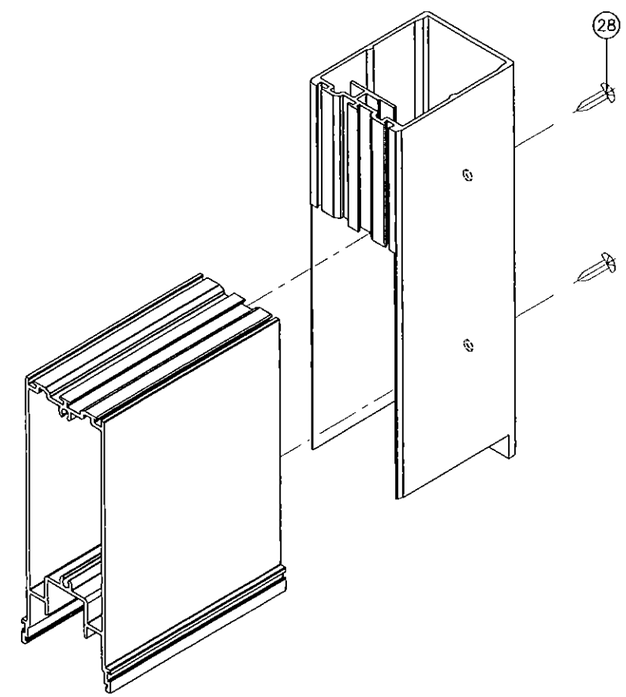

PANEL BOTTOM CORNER

Engr: JAVAD AHMAD
CIVIL
FLA. PE # 70592
C.A.N. 3538

PRODUCT REVISED
is complying with the Florida
Building Code
Acceptance No 15-0413.04
Expiration Date 6/26/2017
By
Miami Dade Product Control

DEC 2 3 2015

AL-FAROOQ CORPORATION
ENGINEERS & PRODUCT DEVELOPMENT
9360 SUNSET DRIVE, SUITE 220
MIAMI, FLORIDA 33173
TEL. (305) 264-8100 FAX. (305) 262-6978
COMP-ANL\W09-59CGI

SERIES-560 ALUM SLIDING GLASS DOOR (S.M.I.)

CGI Windows and Doors, Inc.
10100 N.W. 25TH STREET
MIAMI, FL. 33172
TEL. (305) 593-6590 FAX. (305) 593-6592

revisions:

no	date	by	description
A	03.23.12		NO CHANGE THIS SHEET
B	03.03.15		NO CHANGE THIS SHEET
C	05.04.15		NO CHANGE THIS SHEET
D	11.30.15		REV. PER RER COMMENTS
E	12.23.15		NO CHANGE THIS SHEET

date: 11-10-09
scale: 3/8" = 1"
dr. by: HAMID
chk. by:

drawing no.
W09-59

sheet 12 of 13

MULLION LOAD CAPACITY - PSF		
DIMS.		2 X 10 X 1/8"
WIDTH (W) INCHES	LENGTH (L) INCHES	EXT.(+) INT.(−)
26−1/4	84	140.0
32−1/4		140.0
38−1/4		140.0
44−1/4		140.0
50−1/4		140.0
56−1/4		140.0
62−1/4		140.0
26−1/4	90	140.0
32−1/4		140.0
38−1/4		140.0
44−1/4		140.0
50−1/4		140.0
56−1/4		140.0
62−1/4		140.0
26−1/4	96	140.0
32−1/4		140.0
38−1/4		140.0
44−1/4		140.0
50−1/4		140.0
56−1/4		140.0
62−1/4		140.0
26−1/4	102	140.0
32−1/4		140.0
38−1/4		140.0
44−1/4		140.0
50−1/4		140.0
56−1/4		140.0
62−1/4		140.0
26−1/4	108	140.0
32−1/4		140.0
38−1/4		140.0
44−1/4		140.0
50−1/4		140.0
56−1/4		140.0
62−1/4		140.0
26−1/4	114	140.0
32−1/4		140.0
38−1/4		140.0
44−1/4		140.0
50−1/4		140.0
56−1/4		140.0
26−1/4	120	140.0
32−1/4		140.0
38−1/4		140.0
44−1/4		140.0
50−1/4		140.0
56−1/4		140.0

NOTES:

1. USE CHART ON THIS SHEET FOR SIDE BY SIDE CONNECTION CAPACITY OF DOOR MULLION.
2. FOR SLIDING GLASS DOOR CAPACITY SEE SHEET 3.
3. USE CHART ON SHEETS 5 & 6 TO SELECT ANCHOR ARRANGEMENT AT MULLION ENDS.
4. LOWER VALUES FROM STEPS 1, 2 OR 3 WILL APPLY TO ENTIRE SYSTEM.

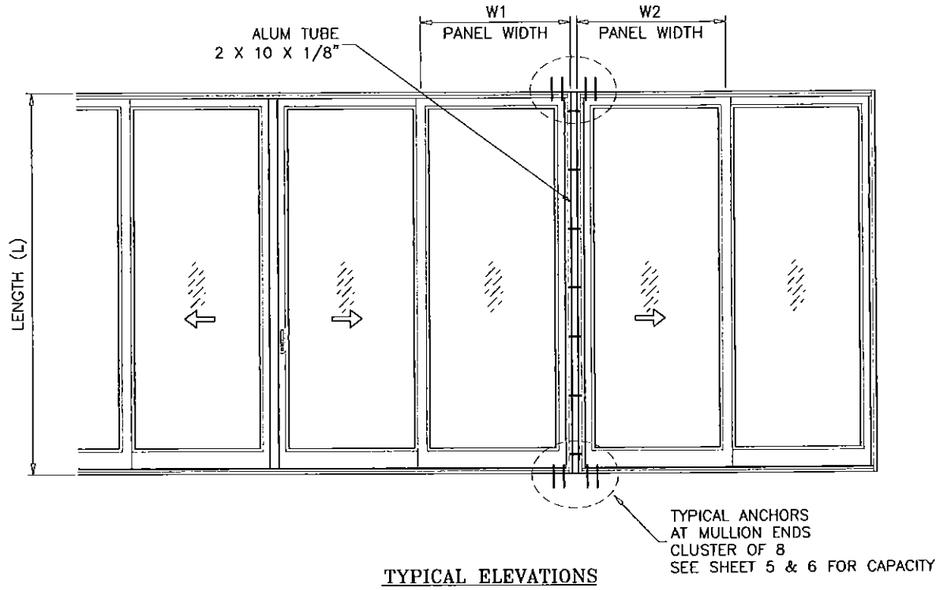

TYPICAL ELEVATIONS

SIDE BY SIDE S.G. DOOR

SIDE BY SIDE APPLIES TO TWO OR MORE DOORS

$$\text{WIDTH (W)} = \frac{W1 + W2}{2} + 2$$

W1 = SGD PANEL WIDTH
W2 = SGD PANEL WIDTH

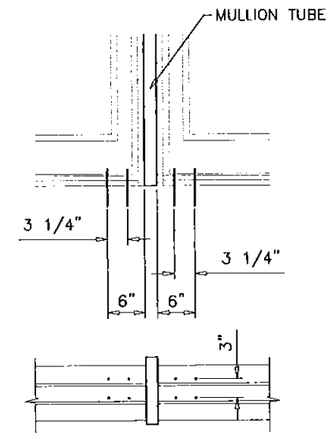

CLUSTER OF 8 ANCHORS HEAD/SILL

READ VALUES FOR CLUSTER OF 8 ANCHORS ON SHEETS 5 & 6.

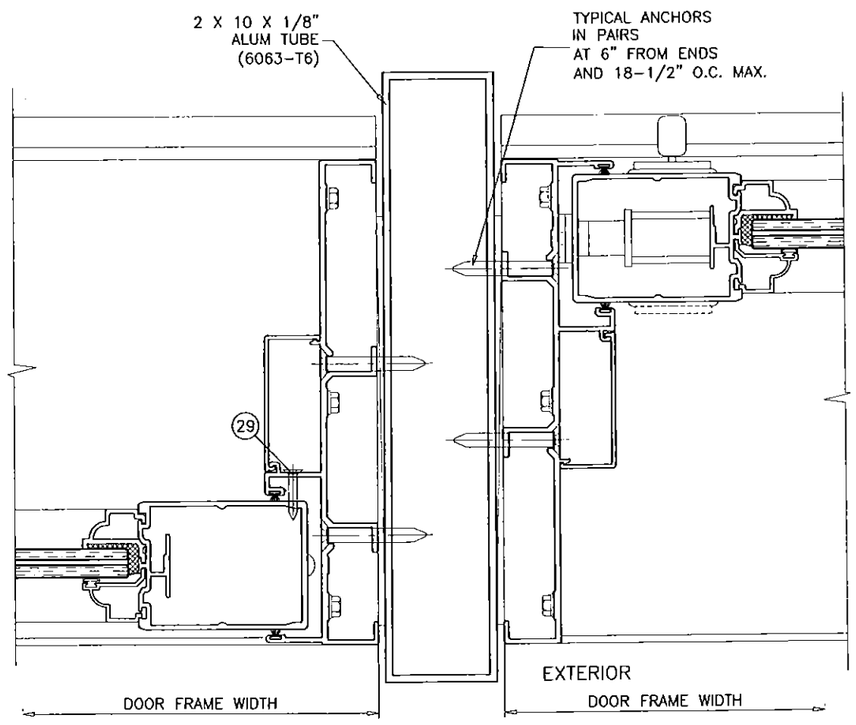

UNCLIPPED MULLION

Engr: JAVAD AHMAD
CIVIL
FLA. PE # 70592
C.A.N. 3538

DEC 23 2015

PRODUCT REVISED
as complying with the Florida Building Code
Acceptance No 15-0413.04
Expiration Date 4/26/2017
By
Miami Dade Product Control

AL-FAROOQ CORPORATION
ENGINEERS & PRODUCT DEVELOPMENT
9360 SUNSET DRIVE, SUITE 220
MIAMI, FLORIDA 33173
TEL. (305) 264-8100 FAX. (305) 262-6978

COMP-ANL\W09-59CGI

SERIES-560 ALUM. SLIDING GLASS DOOR (S.M.I.)

CGI Windows and Doors, Inc.
10100 N.W. 25TH STREET
MIAMI, FL. 33172
TEL. (305) 593-6590 FAX. (305) 593-6592

revisions:

no	date	by	description
A	03.23.12		NO CHANGE THIS SHEET
B	03.03.15		NO CHANGE THIS SHEET
C	05.04.15		NO CHANGE THIS SHEET
D	11.30.15		REV. PER RER COMMENTS
E	12.23.15		REV. PER RER COMMENTS

date: 11-10-09
scale: 3/8" = 1"
dr. by: HAMID
chk. by:

drawing no.
W09-59