MIAMI-DADE COUNTY
DEPARTMENT OF REGULATORY AND ECONOMIC RESOURCES (RER)
BOARD AND CODE ADMINISTRATION DIVISION

MIAMI-DADE COUNTY
PRODUCT CONTROL SECTION
11805 SW 26 Street, Room 208
Miami, Florida 33175-2474
T (786) 315-2590 F (786) 315-2599
www.miamidade.gov/economy

NOTICE OF ACCEPTANCE (NOA)

Birdview Skylights,
D.B.A. Guy E. Bird Enterprises, LTD
201 Longhorn Road
Ft. Worth, TX 76179

SCOPE:
This NOA is being issued under the applicable rules and regulations governing the use of construction materials. The documentation submitted has been reviewed and accepted by Miami-Dade County RER- Product Control Section to be used in Miami Dade County and other areas where allowed by the Authority Having Jurisdiction (AHJ).

This NOA shall not be valid after the expiration date stated below. The Miami-Dade County Product Control Section (In Miami Dade County) and/or the AHJ (in areas other than Miami Dade County) reserve the right to have this product or material tested for quality assurance purposes. If this product or material fails to perform in the accepted manner, the manufacturer will incur the expense of such testing and the AHJ may immediately revoke, modify, or suspend the use of such product or material within their jurisdiction. RER reserves the right to revoke this acceptance, if it is determined by Miami-Dade County Product Control Section that this product or material fails to meet the requirements of the applicable building code.

This product is approved as described herein, and has been designed to comply with the High Velocity Hurricane Zone of the Florida Building Code.

DESCRIPTION: CMDADE Skylight

APPROVAL DOCUMENT: Drawing No. CMDADE08, titled "Large Missile Impact Resistant", prepared by Birdview Skylights, sheet 1 of 1, dated July 11, 2007, with no revision, signed and sealed by Scott Wolters, P.E., on June 12, 2015, bearing the Miami-Dade County Product Control revision stamp with the Notice of Acceptance number and the expiration date by the Miami-Dade County Product Control Section.

MISSILE IMPACT RATING: Large and Small Missile Impact Resistant

LABELING: Each unit shall bear a permanent label with the manufacturer's name or logo, city, state and the following statement: "Miami-Dade County Product Control Approved or MDCPCA", unless otherwise noted herein.

RENEWAL of this NOA shall be considered after a renewal application has been filed and there has been no change in the applicable building code negatively affecting the performance of this product.

TERMINATION of this NOA will occur after the expiration date or if there has been a revision or change in the materials, use, and/or manufacture of the product or process. Misuse of this NOA as an endorsement of any product, for sales, advertising or any other purposes shall automatically terminate this NOA. Failure to comply with any section of this NOA shall be cause for termination and removal of NOA.

ADVERTISEMENT: The NOA number preceded by the words Miami-Dade County, Florida, and followed by the expiration date may be displayed in advertising literature. If any portion of the NOA is displayed, then it shall be done in its entirety.

INSPECTION: A copy of this entire NOA shall be provided to the user by the manufacturer or its distributors and shall be available for inspection at the job site at the request of the Building Official.

This NOA **revises NOA #12-1126.11** and consists of this page 1, evidence submitted pages E-1, E-2, & E-3, as well as approval document mentioned above.
The submitted documentation was reviewed by **Helmy A. Makar, P.E., M.S.**

MIAMI-DADE COUNTY APPROVED

Helmy A. Makar
07/02/2015

NOA No. 15-0415.09
Expiration Date: 01/07/2018
Approval Date: 07/02/2015

Birdview Skylights,
D.B.A. Guy E. Bird Enterprises, LTD

NOTICE OF ACCEPTANCE: EVIDENCE SUBMITTED

1. EVIDENCE SUBMITTED UNDER PREVIOUS APPROVAL # 08-0117.02

A. DRAWING

1. *Drawing No. CMDADE, titled "Birdview Skylights", prepared by Birdview Skylights., sheet 1 of 1, dated 06/28/99, with no revision, signed and sealed by Scott Wolters, P.E.*

B. TEST

1. *Test reports on 1) Air Infiltration Test, per FBC, TAS 202-94*
   2) Uniform Static Air Pressure Test, Loading per FBC TAS 202-94
   3) Water Resistance Test, per FBC, TAS 202-94
   4) Large Missile Impact Test per FBC, TAS 201-94
   5) Cyclic Wind Pressure Loading per FBC, TAS 203-94
   along with marked-up drawings and installation of the Birdview Skylights, prepared by Hurricane Test Laboratory, LLC, and Test Report No. T180-0702-07, dated 08/22/07, signed and sealed by Vinu J. Abraham, P.E.

C. CALCULATIONS

1. *Anchor calculations prepared by Wolters Engineering, Inc. dated 12/18/07, signed and sealed by Scott Wolters, P.E.*

D. QUALITY ASSURANCE

1. *Miami Dade Building Code Compliance Office (BCCO).*

E. MATERIAL CERTIFICATION

1. *None.*

F. STATEMENTS

1. *Test Compliance and no financial interest statement issued by Hurricane Test Laboratory, LLC, dated 08/22/07, signed and sealed by Vinu J. Abraham, P.E.*
2. *Code compliance letter issued by Wolters Engineering, Inc. dated 01/04/08, signed and sealed by Scott Wolters, P.E.*
3. *No financial interest letter issued by Wolters Engineering, Inc. dated 01/04/08, signed and sealed by Scott Wolters, P.E.*

Hamy A. Makar, P.E., M.S.
Product Control Unit Supervisor
NOA No. 15-0415.09
Expiration Date: 01/07/2018
Approval Date: 07/02/2015

NOTICE OF ACCEPTANCE: EVIDENCE SUBMITTED

2. EVIDENCE SUBMITTED UNDER PREVIOUS APPROVAL # 11-0811.09

A. DRAWING

1. *Drawing No. CMDADE08, titled "Large Missile Impact Resistant", prepared by E. Bird, sheet 1 of 1, dated July 11, 2007, with no revision, signed and sealed by Scott Wolters, P.E., on October 31, 2011.*

B. TEST

1. *None.*

C. CALCULATIONS

1. *None.*

D. QUALITY ASSURANCE

1. *By Miami-Dade County Department of Permitting, Environment, and Regulatory Affairs.*

E. MATERIAL CERTIFICATION

1. *None.*

F. STATEMENTS

1. *Code compliance letter issued by Wolters Engineering, dated October 31, 2011, signed and sealed by Scott Wolters, P.E.*
2. *Certificate of Filing with the State of Texas, dated August 09, 2011, signed by Hope Andrade, Secretary of State.*

3. EVIDENCE SUBMITTED UNDER PREVIOUS APPROVAL # 12-1126.11

A. DRAWING

1. *Drawing No. CMDADE08, titled "Large Missile Impact Resistant", prepared by E. Bird, sheet 1 of 1, dated July 11, 2007, with no revision, signed and sealed by Scott Wolters, P.E., on October 31, 2011.*

B. TEST

1. *None.*

C. CALCULATIONS

1. *None.*

Hehmy A. Makar, P.E., M.S.
Product Control Unit Supervisor
NOA No. 15-0415.09
Expiration Date: 01/07/2018
Approval Date: 07/02/2015

NOTICE OF ACCEPTANCE: EVIDENCE SUBMITTED

D. QUALITY ASSURANCE

1. By Miami-Dade County Department of Regulatory and Economic Resources.

E. MATERIAL CERTIFICATION

1. None.

F. STATEMENTS

1. FBC 2010 Code compliance letter issued by Wolters Engineering, dated November 19, 2012, signed and sealed by Scott Wolters, P.E.

4. NEW EVIDENCE SUBMITTED

A. DRAWING

1. Drawing No. CMDADE08, titled "Large Missile Impact Resistant", prepared by Birdview Skylights, sheet 1 of 1, dated July 11, 2007, with no revision, signed and sealed by Scott Wolters, P.E., on June 12, 2015.

B. TEST

1. None.

C. CALCULATIONS

1. None.

D. QUALITY ASSURANCE

1. By Miami-Dade County Department of Regulatory and Economic Resources.

E. MATERIAL CERTIFICATION

1. None.

F. STATEMENTS

1. FBC 2014 Code compliance letter issued by Wolters Engineering, dated March 31, 2015, signed and sealed by Scott Wolters, P.E.

Hemy A. Makar, P.E., M.S.
Product Control Unit Supervisor
NOA No. 15-0415.09
Expiration Date: 01/07/2018
Approval Date: 07/02/2015

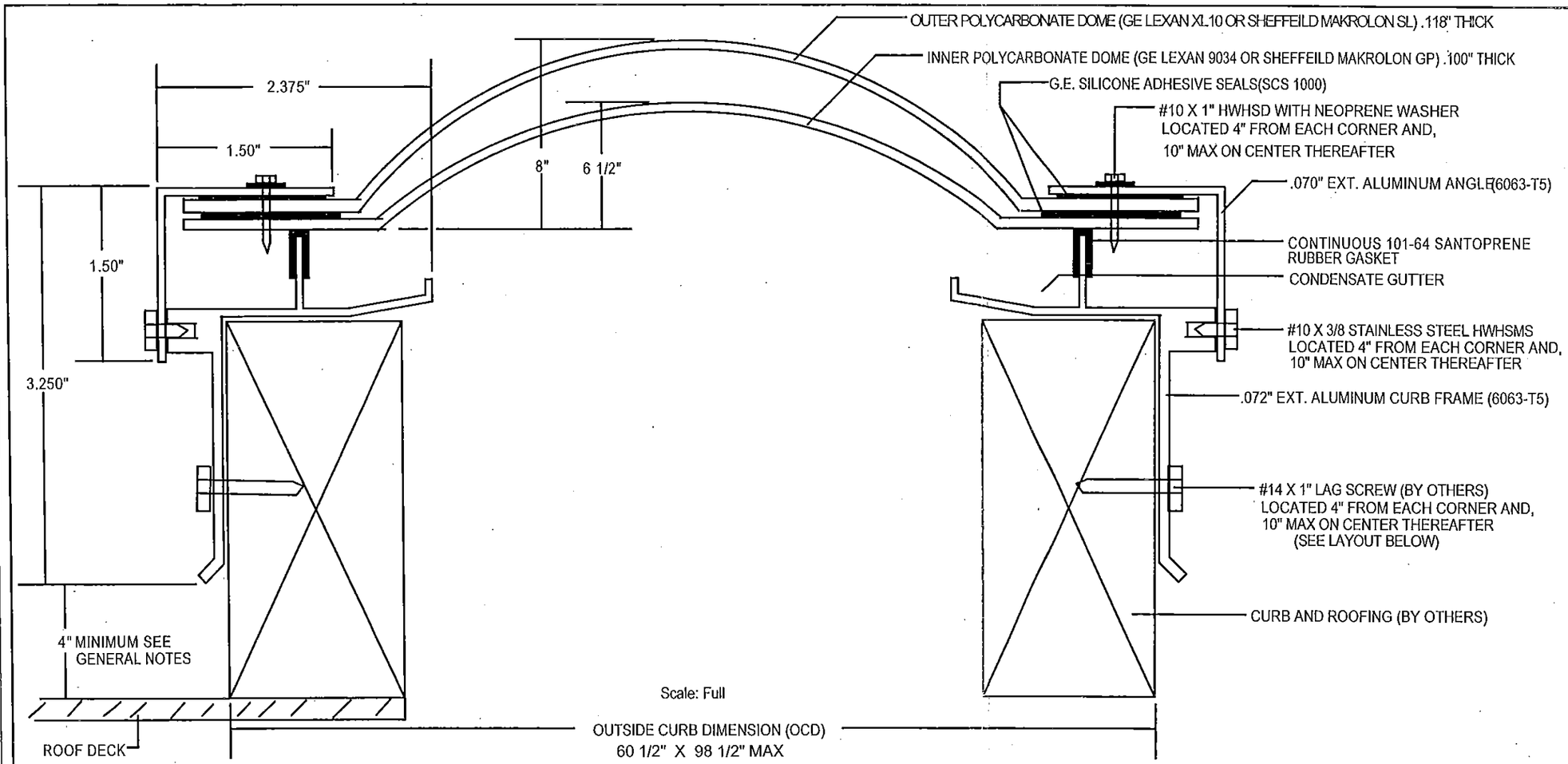

Scale: Full

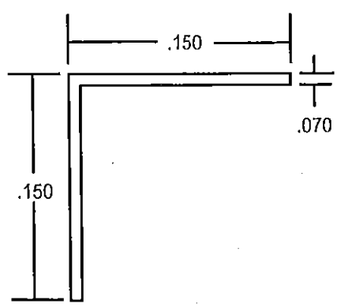

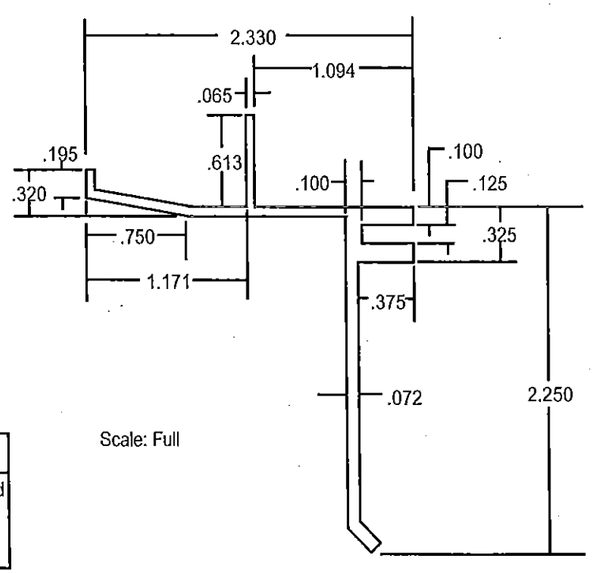

Scale: Full

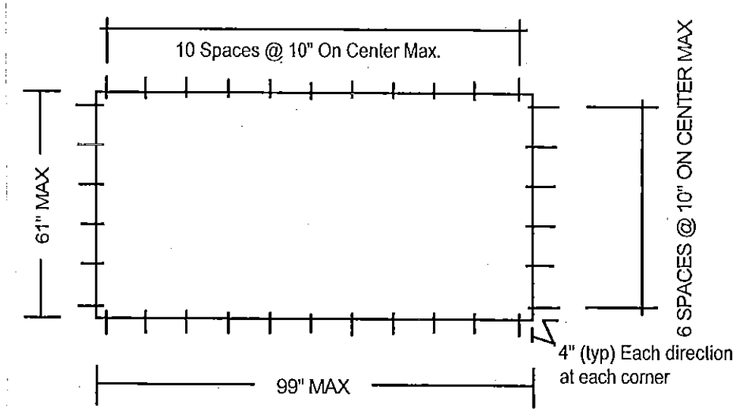

Fastener Layout
Scale: N/A

NOTE:
All aluminum shall be 6063 T5 alloy fully mitered and heliarc welded at corners.

BIRDVIEW SKYLIGHTS
a DBA of Guy E Bird Enterprises, Ltd.
201LONGHORN RD. FT. WORTH TX. 76179
Ph. 817-439-9266 Fx. 817-232-8468

DRAWING# CMDADE08 SHEET 1 OF 1
DRAWN BY: E. BIRD
DATE: 07/11/2007 SCALE: FULL and NOTED

DESIGN PRESSURES
Positive + 60psf Negative - 100psf

LARGE MISSILE IMPACT RESISTANT

SCOTT WOLTERS
FL PE# 62354

WOLTERS ENGINEERING
(COA# 27194)
15211 97TH ROAD N
WEST PALM BEACH, FL 33412
PH/FAX: (561) 225-1982

JUN 12 2015

GENERAL NOTES

1. THIS SKYLIGHT MEETS THE HVHZ PROVISIONS OF THE 5TH EDITION (2014) FLORIDA BUILDING CODE.
2. 4" CLEAR MINIMUM REQUIREMENT FOR SHINGLE & BUR WITHOUT INSULATION. FOR INSULATION AND TILES ADD THE INSUATION THICKNESS AND THE TILE HEIGHT TO 4"
3. WEEP HOLES ARE NOT REQUIRED.
4. THE CURB (BY OTHERS) SHALL BE PROPERLY DESIGNED AND ANCHORED TO THE STUCTURE AND/OR TRUSSES.

PRODUCT REVISED
as complying with the Florida Building Code
Acceptance No 15-0415.09
Expiration Date 01/07/2018
By
Miami Dade Product Control