MIAMI-DADE COUNTY
PRODUCT CONTROL SECTION
11805 SW 26 Street, Room 208
Miami, Florida 33175-2474
T (786) 315-2590 F (786) 315-2599
www.miamidade.gov/economy

DEPARTMENT OF REGULATORY AND ECONOMIC RESOURCES (RER)
BOARD AND CODE ADMINISTRATION DIVISION

NOTICE OF ACCEPTANCE (NOA)

PGT Industries, Inc.
1070 Technology Drive
North Venice, FL 34275

SCOPE:

This NOA is being issued under the applicable rules and regulations governing the use of construction materials. The documentation submitted has been reviewed and accepted by Miami-Dade County RER -Product Control Section to be used in Miami Dade County and other areas where allowed by the Authority Having Jurisdiction (AHJ).

This NOA shall not be valid after the expiration date stated below. The Miami-Dade County Product Control Section (In Miami Dade County) and/or the AHJ (in areas other than Miami Dade County) reserve the right to have this product or material tested for quality assurance purposes. If this product or material fails to perform in the accepted manner, the manufacturer will incur the expense of such testing and the AHJ may immediately revoke, modify, or suspend the use of such product or material within their jurisdiction. RER reserves the right to revoke this acceptance, if it is determined by Miami-Dade County Product Control Section that this product or material fails to meet the requirements of the applicable building code.

This product is approved as described herein, and has been designed to comply with the Florida Building Code, including the High Velocity Hurricane Zone.

DESCRIPTION: Series "CA-5440" Outswing Vinyl Casement Windows – Non-Impact

APPROVAL DOCUMENT: Drawing No. **MD-5440C.0**, titled "Vinyl Casement Window(NI)", sheets 1through 11 of 11, prepared by manufacturer, dated 09/09/14 and last revised on 09/11/15, signed and sealed by Lynn Miller, P.E., bearing the Miami-Dade County Product Control Approval stamp with the Notice of Acceptance number and approval date by the Miami-Dade County Product Control Section.

MISSILE IMPACT RATING: None: Approved Hurricane Protection devices, complying w/ FBC, as applicable are required.

Limitations:

1. See Casement Window Design Pressure (DP) tables Vs sizes, glass types, hardware & anchor types in sheets **8** & **9**.
2. See sheets **5** & **6** for mulled units(max **4** windows) using Tube mullion (item #90), max mullion span **not** to exceed **63"** and max DP is limited =**70 PSF**. Lower design of tube mullion, Casement windows or Fixed windows (under separate approval) or Awning Windows (under separate approval) shall control for entire mulled assembly. Two (2) additional anchors at each mull end are required beside the each individual mulled unit anchorage schedules.

LABELING: Each unit shall bear a permanent label with the manufacturer's name or logo, city, state and series and following statement: "Miami-Dade County Product Control Approved", noted herein.

RENEWAL of this NOA shall be considered after a renewal application has been filed and there has been no change in the applicable building code negatively affecting the performance of this product.

TERMINATION of this NOA will occur after the expiration date or if there has been a revision or change in the materials, use, and/or manufacture of the product or process. Misuse of this NOA as an endorsement of any product, for sales, advertising or any other purposes shall automatically terminate this NOA. Failure to comply with any section of this NOA shall be cause for termination and removal of NOA.

ADVERTISEMENT: The NOA number preceded by the words Miami-Dade County, Florida, and followed by the expiration date may be displayed in advertising literature. If any portion of the NOA is displayed, then it shall be done in its entirety.

INSPECTION: A copy of this entire NOA shall be provided to the user by the manufacturer or its distributors and shall be available for inspection at the job site at the request of the Building Official.

This NOA and consists of this page 1 and evidence pages E-1 & E-2, as well as approval document mentioned above.

The submitted documentation was reviewed by **Ishaq I. Chanda, P.E.**

MIAMI-DADE COUNTY APPROVED

9/15/15

NOA No. 15-0420.12
Expiration Date: September 17, 2020
Approval Date: September 17, 2015

PGT Industries, Inc.

NOTICE OF ACCEPTANCE: EVIDENCE SUBMITTED

A. DRAWINGS

1. Manufacturer's die drawings and sections
2. Drawing No. **MD-5440C.0**, titled "Vinyl Casement Window(NI)", sheets 1through 11 of 11, prepared by manufacturer, dated 09/09/14 and last revised on 09/11/15, signed and sealed by Lynn Miller, P.E.

B. TESTS

1. Test reports on: 1) Air Infiltration Test, per FBC, TAS 202–94
   2) Uniform Static Air Pressure Test, Loading per FBC, TAS 202–94
   3) Water Resistance Test, per FBC, TAS 202–94
   4) Forced Entry Test, per FBC 2411.3.2.1, and TAS 202–94

   Along with marked-up drawings and installation diagram of series CA5440Vinyl outswing Casement windows, prepared by Fenestration Testing Laboratory, Inc., Test Report No(s). **FTL-8139**, dated 03/31/2014, signed and sealed by Idalmis Ortega, P.E.
2. Test reports on: 1) Air Infiltration Test, per FBC, TAS 202–94
   2) Uniform Static Air Pressure Test, Loading per FBC, TAS 202–94
   3) Water Resistance Test, per FBC, TAS 202–94
   4) Large Missile Impact Test per FBC, TAS 201–94
   5) Cyclic Wind Pressure Loading per FBC, TAS 203–94
   6) Forced Entry Test, per FBC 2411.3.2.1, and TAS 202–94

   Along with marked-up drawings and installation diagram of series 5540/5440 Vinyl Fixed windows w/Tube mullion, prepared by Fenestration Testing Laboratory, Inc., Test Report No(s). **FTL-8174**, dated 03/31/2015, signed and sealed by Idalmis Ortega, P.E.
3. Reference awning window test report **FTL-8183** per TAS 201, 202 & 203-94, with an addendum letter issued by Fenestration Testing Lab.

C. CALCULATIONS

1. Anchor verification calculations, comparative analysis and structural analysis dated 04/06/15 and last revised on 08/28/15, complying with FBC-214 (**5th** Edition), prepared by PGT, signed and sealed by Lynn Miller, P.E.
2. Glazing complies w/ ASTME-1300-02, 04 & -09.

D. QUALITY ASSURANCE

1. Miami Dade Department of Regulatory and Economic Resources (RER).

E. MATERIAL CERTIFICATIONS

1. Notice of Acceptance No. **12-1120.02** issued to Royal **Window and Door Profiles, Plant 13** for the "**White Rigid PVC Exterior Extrusions for Windows and Doors**", expiring on 02/28/18.

Ishaq I. Chanda

Ishaq I. Chanda, P.E.
Product Control Examiner
NOA No. 15-0420.12
Expiration Date: September 17, 2020
Approval Date: September 17, 2015

NOTICE OF ACCEPTANCE: EVIDENCE SUBMITTED

E. MATERIAL CERTIFICATIONS(continue)

2. Notice of Acceptance No. **14-0529.13** issued to Royal **Window and Door Profiles, Plant 13** for the "**Bronze and Lighter shades of cap Coated Rigid PVC Exterior Extrusions for Windows and Doors**", expiring on 04/16/20.

F. STATEMENTS

1. Statement letter of conformance to FBC 2014(5th edition) and letter of no financial interest, prepared by PGT, dated 04/16/15, signed and sealed by Lynn Miller, P.E.
2. Lab compliance as part of the above referenced test report.

G. OTHER

1. Test proposal approved dated 09/29/14 and revised on 10/15/14 by Jaime D. Gascon, P.E.

Ishaq I. Chanda

Ishaq I. Chanda, P.E.
Product Control Examiner
NOA No. 15-0420.12
Expiration Date: September 17, 2020
Approval Date: September 17, 2015

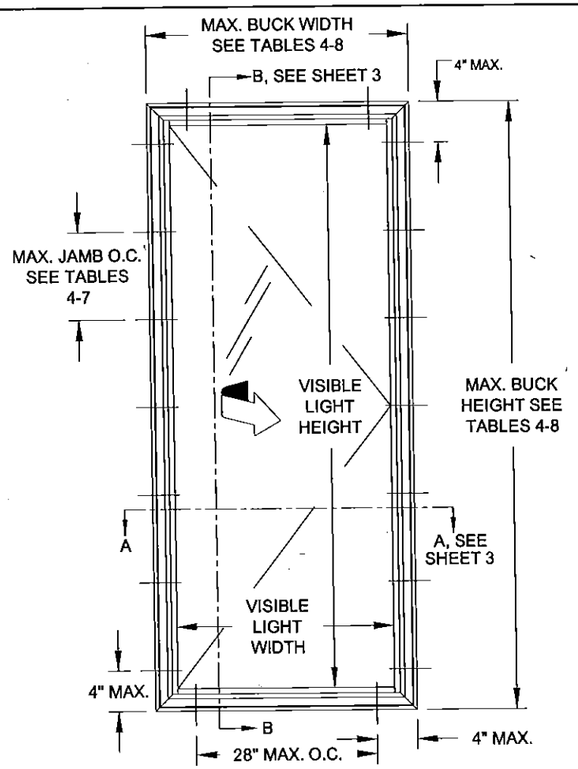

TYP. EQUAL-LEG/BOX &
FLANGE FRAME ANCHORAGE

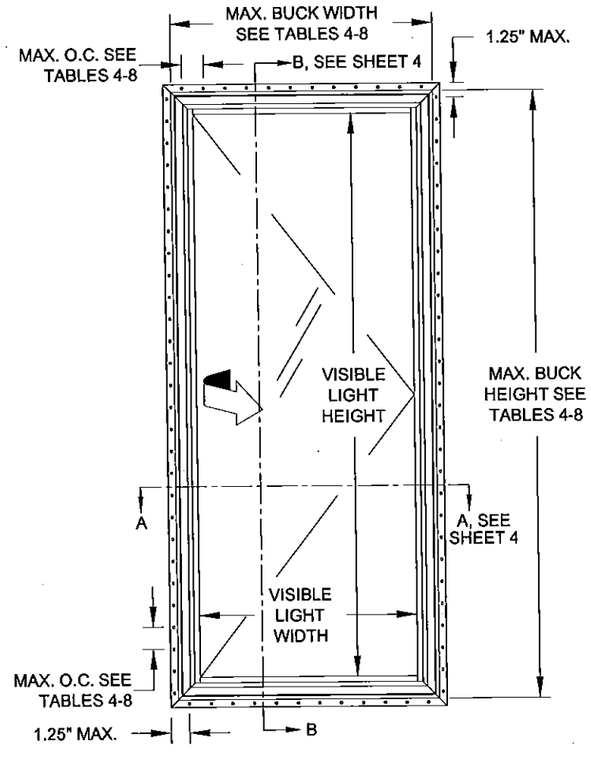

TYP. INTEGRAL FIN & J-CHANNEL
FRAME ANCHORAGE

IMPACT RATING	DESIGN PRESSURE RATING
NOT RATED FOR IMPACT RESISTANCE	VARIES PER OPTIONS, SEE TABLES 4-8, SHEETS 8-9

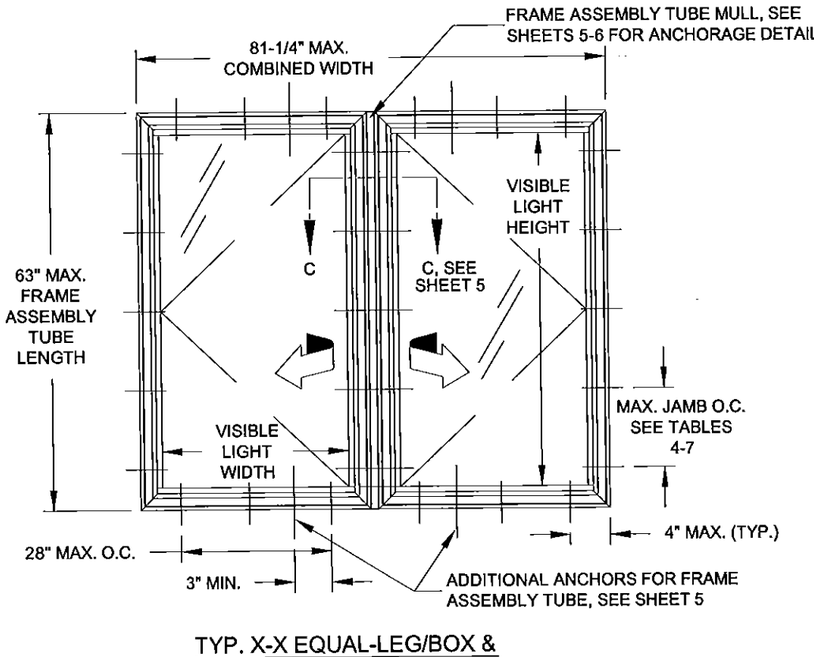

TYP. X-X EQUAL-LEG/BOX &
FLANGE FRAME ANCHORAGE

GENERAL NOTES: SERIES 5440 NON-IMPACT RESISTANT, VINYL CASEMENT WINDOW

1) THIS PRODUCT HAS BEEN DESIGNED & TESTED TO COMPLY WITH THE REQUIREMENTS OF THE FLORIDA BUILDING CODE, INCLUDING THE HIGH VELOCITY HURRICANE ZONE (HVHZ).

2) SHUTTERS ARE REQUIRED WHEN USED IN WIND-BORNE DEBRIS REGIONS.

3) FOR MASONRY APPLICATIONS IN MIAMI-DADE COUNTY, USE ONLY MIAMI-DADE COUNTY APPROVED MASONRY ANCHORS. MATERIALS USED FOR ANCHOR EVALUATIONS WERE SOUTHERN PINE, ASTM C90 CONCRETE MASONRY UNITS AND CONCRETE WITH MIN. KSI PER ANCHOR TYPE.

4) ALL WOOD BUCKS LESS THAN 1-1/2" THICK ARE TO BE CONSIDERED 1X INSTALLATIONS. 1X WOOD BUCKS ARE OPTIONAL IF UNIT IS INSTALLED DIRECTLY TO SUBSTRATE. WOOD BUCKS DEPICTED AS 2X ARE 1-1/2" THICK OR GREATER. 1X AND 2X BUCKS (WHEN USED) SHALL BE DESIGNED AND SECURED TO PROPERLY TRANSFER LOADS TO THE STRUCTURE. WOOD BUCK DESIGN AND INSTALLATION IS THE RESPONSIBILITY OF THE ENGINEER, (EOR) OR ARCHITECT OF RECORD, (AOR).

5) ANCHOR EMBEDMENT TO BASE MATERIAL SHALL BE BEYOND WALL DRESSING OR STUCCO. USE ANCHORS OF SUFFICIENT LENGTH TO ACHIEVE EMBEDMENT. INSTALLATION ANCHORS SHOULD BE SEALED. OVERALL SEALING/FLASHING STRATEGY FOR WATER RESISTANCE OF INSTALLATION SHALL BE DONE BY OTHERS AND IS BEYOND THE SCOPE OF THESE INSTRUCTIONS.

6) MAX. 1/4" SHIMS ARE REQUIRED AT EACH ANCHOR LOCATION WHERE THE PRODUCT IS NOT FLUSH TO THE SUBSTRATE. USE SHIMS CAPABLE OF TRANSFERRING APPLIED LOADS. WOOD BUCKS, BY OTHERS, MUST BE SUFFICIENTLY ANCHORED TO RESIST LOADS IMPOSED ON THEM BY THE WINDOW.

7) DESIGN PRESSURES: A. NEGATIVE DESIGN LOADS BASED ON STRUCTURAL TEST PRESSURE, FRAME ANALYSIS AND GLASS PER ASTM E1300.
B. POSITIVE DESIGN LOADS BASED ON WATER TEST PRESSURE, STRUCTURAL TEST PRESSURE, FRAME ANALYSIS AND GLASS PER ASTM E1300.

8) THE ANCHORAGE METHODS SHOWN HAVE BEEN DESIGNED AND SECURED TO RESIST THE WINDLOADS CORRESPONDING TO THE REQUIRED DESIGN PRESSURE. THE 33-1/3% STRESS INCREASE HAS NOT BEEN USED IN THE DESIGN OF THIS PRODUCT. THE 1.6 LOAD DURATION FACTOR WAS USED FOR THE EVALUATION OF ANCHORS INTO WOOD. ANCHORS THAT COME INTO CONTACT WITH OTHER DISSIMILAR MATERIALS SHALL MEET THE REQUIREMENTS OF THE FLORIDA BUILDING CODE FOR CORROSION RESISTANCE.

9) METAL SUBSTRATE TO MEET MIN. STRENGTH AND THICKNESS REQUIREMENTS PER CURRENT FLORIDA BUILDING CODE AND TO BE REVIEWED BY THE AUTHORITY HAVING JURISDICTION .

10) REFERENCES: TEST REPORTS FTL-8139, 8174; ELCO ULTRACON NOA; ELCO CRETEFLEX NOA; ELCO AGGRE-GATOR NOA; ROYAL WINDOW AND DOOR PROFILES, LTD WHITE & BRONZE/LIGHTER SHADES OF CAP COATED PVC EXTRUSION NOA'S; NATIONAL DESIGN SPECIFICATION FOR WOOD CONSTRUCTION, ANSI/AF&PA NDS & ALUMINUM DESIGN MANUAL

11) APPLICABLE EGRESS REQUIREMENTS TO BE REVIEWED BY BUILDING OFFICIAL.

VISIBLE LIGHT FORMULAS
WIDTH: BUCK WIDTH - 6-3/4"
HEIGHT: BUCK HEIGHT - 6-3/4"

GENERAL NOTES..... 1
ELEVATIONS..... 1
FRAME, GLASS & ANCHOR OPTIONS..... 2
INSTALLATION, FLANGE & EQUAL LEG..... 3
INSTALLATION, INTEGRAL FIN & J-CHANNEL..... 4
FRAME ASSEMBLY TUBE..... 5-6
GLAZING DETAILS..... 7
DESIGN PRESSURES..... 8-9
BOM & ASSEMBLY..... 10-11

Approved as complying with the
Florida Building Code
Date SEP 17 2015
NOA# 15-0420.12
Miami Dade Product Control
By Ishaq I. Chanda

Rev.	Rev 1	Rev 2	Rev 3

PGT®
1070 TECHNOLOGY DRIVE
N. VENICE, FL 34275
(941)-480-1600
CERT. OF AUTH. #29296

Title	Desc.	Series
VINYL CASEMENT WINDOW NOA (NI)	GENERAL NOTES AND ELEVATION	CA-5440

Date	Drawn By	Rev.
9/9/14	J ROSOWSKI	MD-5440C.0

DWG No	Sheet	Scale
	1 OF 11	NTS

ANTHONY LYNN MILLER
LICENSE
No. 58705
STATE OF FLORIDA
PROFESSIONAL ENGINEER
A. LYNN MILLER, P.E.
P.E.# 58705

TABLE 1:

Glass Type	Description	Table #	Sheet #
1	3/4" I.G.: 1/8" A Exterior Cap + 1/2" Air Space + 1/8" A	4	8
2	3/4" I.G.: 1/8" T Exterior Cap + 1/2" Air Space + 1/8" T	5 & 6	8 & 9
3	3/4" I.G.: 3/16" A Exterior Cap + 3/8" Air Space + 3/16" A	5 & 7	8 & 9
4	3/4" I.G.: 3/16" T Exterior Cap + 3/8" Air Space + 3/16" T	5 & 6	8 & 9

"A" = ANNEALED
"T" = TEMPERED

TABLE 2: ANCHORS INSTALLED THROUGH FRAME

Group	Anchor	Substrate	Min. Edge Distance	Min. Embedment*
A	#10 SMS (steel, 18-8 S.S. or 410 S.S.)	P.T. Southern Pine (SG=0.55)	7/16"	1-3/8"
		Steel, A36*	3/8"	0.050"
		Steel Stud, A653 Gr. 33*	3/8"	0.0451" (18 Ga.)
		Aluminum, 6063-T5*	3/8"	0.050"
	3/16" steel Ultracon	P.T. Southern Pine (SG=0.55)	7/16"	1-3/8"
		Concrete (min. 2.85 ksi)	1"	1-3/8"
		Ungrouted CMU, (ASTM C-90)	2-1/2"	1-1/4"
B	#12 SMS (steel, 18-8 S.S. or 410 S.S.)	P.T. Southern Pine (SG=0.55)	9/16"	1-3/8"
		Steel, A36*	3/8"	0.050"
		Steel Stud, A653 Gr. 33*	3/8"	0.0451" (18 Ga.)
		Aluminum, 6063-T5*	3/8"	0.063"
C	1/4" steel Ultracon	Concrete (min. 2.85 ksi)	1"	1-3/4"
		Ungrouted CMU, (ASTM C-90)	2-1/2"	1-1/4"
	1/4" steel Creteflex	Concrete (min. 3.35 ksi)	1"	1-3/4"
D	1/4" steel Ultracon	P.T. Southern Pine (SG=0.55)	1"	1-3/8"
		Ungrouted CMU, (ASTM C-90)	2-1/2"	1-1/4"
	1/4" steel Creteflex	P.T. Southern Pine (SG=0.55)	1"	1-3/8"
	1/4" steel Aggre-Gator	P.T. Southern Pine (SG=0.55)	1"	1-3/8"
		Grouted CMU, (ASTM C-90)	2"	2"
	1/4" steel Ultracon	Concrete (min. 2.85 ksi)	2-1/2"	1-3/4"
	1/4" steel Creteflex	Concrete (min. 3.35 ksi)	2-1/2"	1-3/4"
	1/4" steel Aggre-Gator	Concrete (min. 3.275 ksi)	1-1/2"	1-3/8"

* MIN. OF 3 THREADS BEYOND THE METAL SUBSTRATE. FOR STEEL STUDS, MIN Fu=45 KSI.

"UNGROUTED CMU" VALUES MAY BE USED FOR GROUTED CMU APPLICATIONS.

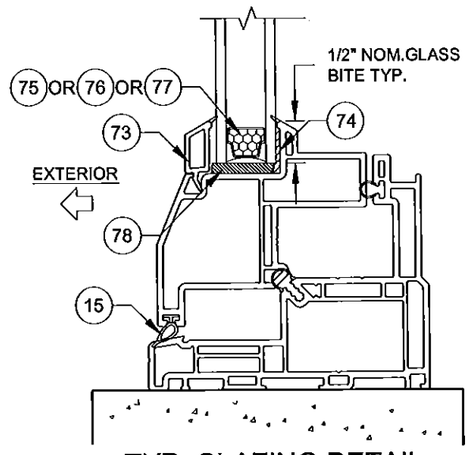

TYP. GLAZING DETAIL

TABLE 3: ANCHORS INSTALLED THROUGH INTEGRAL FIN

Group	Anchor	Substrate	Min. Edge Distance	Min. Embedment*
E	2-1/2" x .131" Common Nail	P.T. Southern Pine (SG=.55)	3/8"	2-7/16"
F	2-1/2" Ring-shank Roofing Nail	P.T. Southern Pine (SG=.55)	3/8"	2-7/16"
	#10 Trusshead SMS (steel, 18-8 S.S. or 410 S.S.)	P.T. Southern Pine (SG=.55)	1/2"	1-3/8"
		Aluminum, 6063-T5*	3/8"	0.050"
		Steel Stud, Gr. 33*	3/8"	0.0451" (18 Ga.)
		Steel, A36*	3/8"	0.050"
	#12 SMS (steel, 18-8 S.S. or 410 S.S.)	P.T. Southern Pine (SG=.55)	9/16"	1-3/8"
		Aluminum, 6063-T5*	3/8"	0.063"
		Steel Stud, Gr. 33*	3/8"	0.050"
		Steel, A36*	3/8"	0.050"

* MIN. OF 3 THREADS BEYOND THE METAL SUBSTRATE. FOR STEEL STUDS, MIN Fu=45 KSI.

WINDOW FRAMES MAY BE ANY OF THOSE SHOWN BELOW:

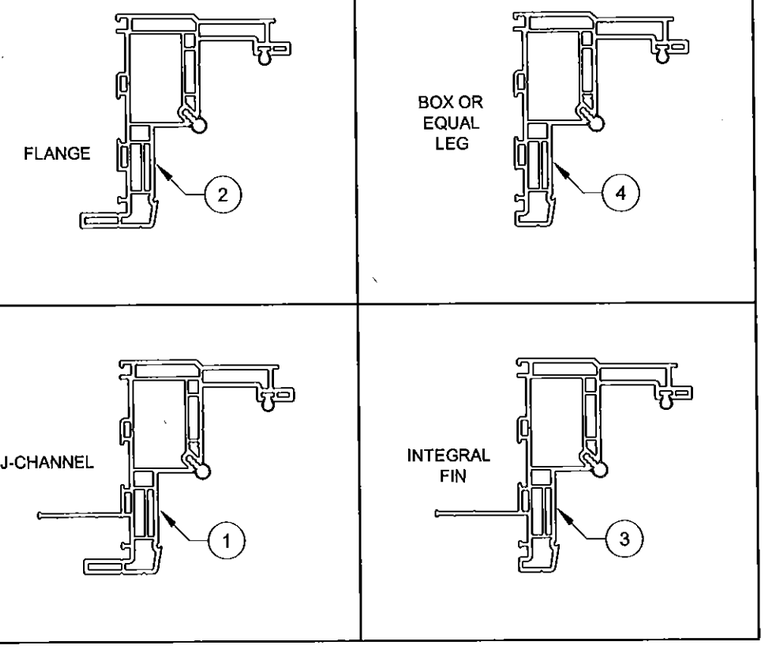

NOTE: SEE DETAILS AND DIMENSIONS ON SHEET 11

Approved as complying with the Florida Building Code
Date 9/17/15
NOA# 15-0420.12
Miami Dade Product Control
By Ishwar I. Chandra

CERT. OF AUTH. #29296
1070 TECHNOLOGY DRIVE
N. VENICE, FL 34275
(941)-480-1600

Title	VINYL CASEMENT WINDOW NOA (NI)			Date	9/9/14
Desc.	GLASS/ANCHORS/FRAME OPTIONS		Drawn By	J ROSOWSKI	
Rev 1				Rev 1 Date	
Rev 2				Rev 2 Date	
Series	CA-5440	Scale NTS	Sheet 2 OF 11	DWG No. MD-5440C.0	Rev. No.

ANTHONY LYNN MILLER LICENSE No. 58705 STATE OF FLORIDA PROFESSIONAL ENGINEER
A. LYNN MILLER, P.E.
P.E.# 58705

INSTALLATION OPTION 1

ANCHORED THROUGH FRAME INTO 2X WOOD FRAME OR BUCKSTRIP. SEE NOTE 2, THIS SHEET.

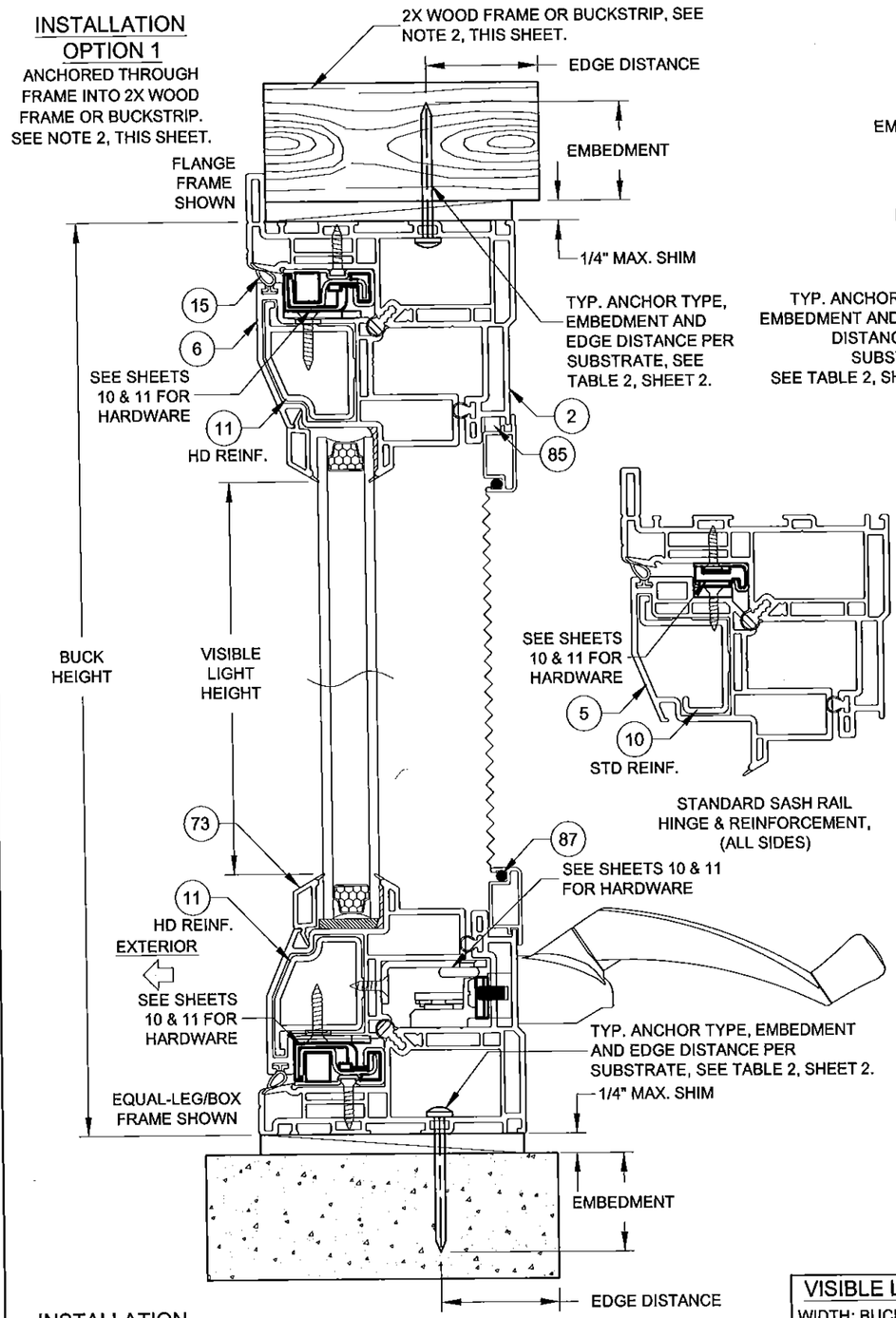

VERTICAL SECTION B-B

SHOWN WITH HEAVY-DUTY SASH, HINGE & REINFORCEMENT

INSTALLATION OPTION 2

ANCHORED THROUGH FRAME DIRECTLY INTO CONCRETE/CMU.

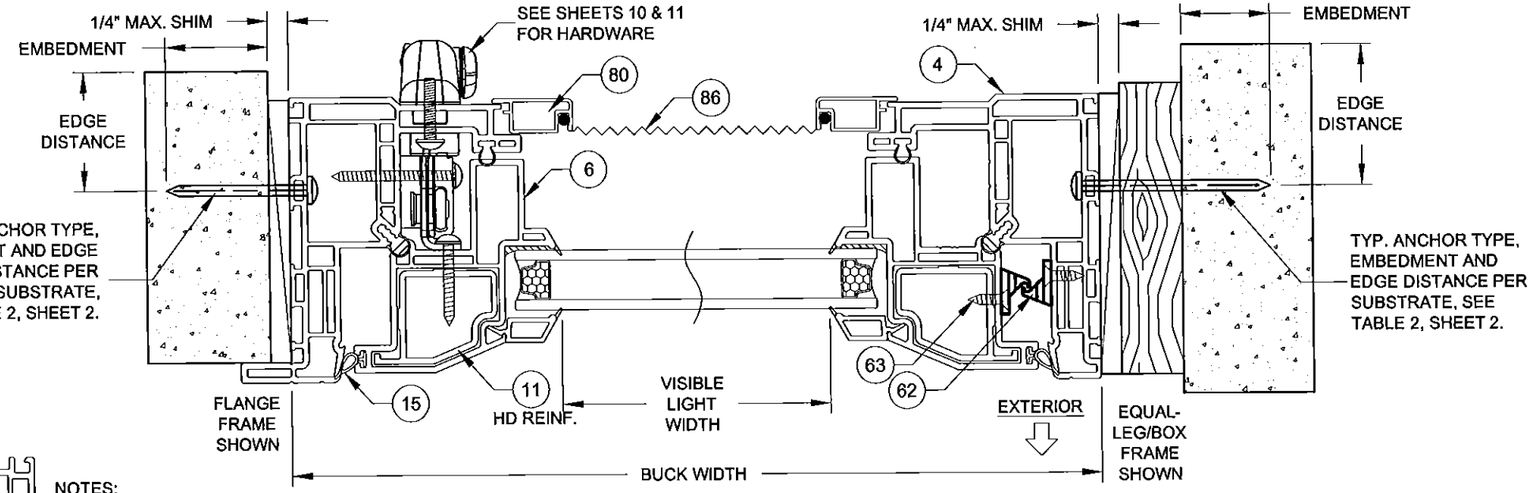

INSTALLATION OPTION 3

ANCHORED THROUGH FRAME AND 1X BUCKSTRIP INTO CONCRETE/CMU. SEE NOTE 2, THIS SHEET.

NOTES:

1) USE ONLY SUBSTRATE-APPROPRIATE ANCHORS LISTED ON TABLE 2, SHEET 2. FOLLOW EMBEDMENT AND EDGE DISTANCE LIMITS. ANY INSTALLATION OPTION SHOWN MAY BE USED ON ANY SIDE OF THE WINDOW.

2) MASONRY ANCHORS MAY BE USED INTO WOOD AS PER TABLE 2, SHEET 2. ALL WOOD BUCKS LESS THAN 1-1/2" THICK ARE TO BE CONSIDERED 1X INSTALLATIONS. 1X WOOD BUCKS ARE OPTIONAL IF UNIT IS INSTALLED DIRECTLY TO SUBSTRATE. WOOD BUCKS DEPICTED AS 2X ARE 1-1/2" THICK OR GREATER. 1X AND 2X BUCKS (WHEN USED) SHALL BE DESIGNED AND SECURED TO PROPERLY TRANSFER LOADS TO THE STRUCTURE. WOOD BUCK DESIGN AND INSTALLATION IS THE RESPONSIBILITY OF THE ENGINEER OR ARCHITECT OF RECORD.

3) VISIBLE LIGHT WIDTH OR HEIGHT (ALSO REFERRED TO AS DAYLIGHT OPENING) IS MEASURED FROM BEADING TO BEADING.

HORIZONTAL SECTION A-A

SHOWN WITH HEAVY-DUTY SASH, HINGE & REINFORCEMENT

DADE APPROVED MULLION, FBC COMPLIANT ALUMINUM/STEEL FRAMING OR STEEL STUD. MAY BE VERTICAL OR HORIZONTAL. SEE SUBSTRATE PROPERTIES, TABLE 2, SHEET 2.

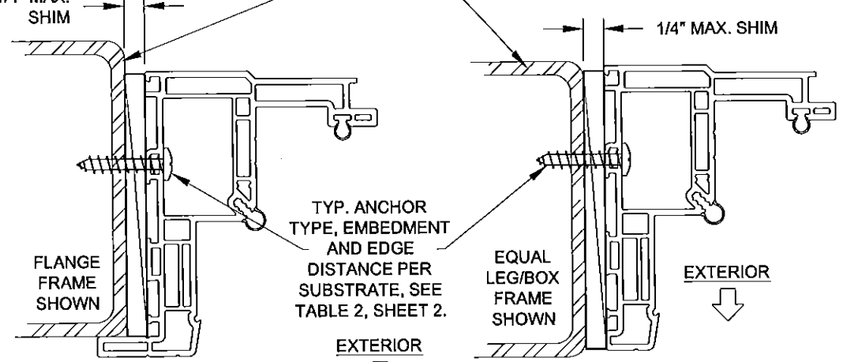

INSTALLATION OPTION 4

ANCHORED THROUGH FRAME INTO METAL

INSTALLATION OPTION 4

ANCHORED THROUGH FRAME INTO METAL

VISIBLE LIGHT FORMULAS

WIDTH: BUCK WIDTH - 6-3/4"
HEIGHT: BUCK HEIGHT - 6-3/4"

Approved as complying with the Florida Building Code
Date 9/17/15
NOA# 15-0420.12
Miami Dade Product Control
By Ishaq I. Chanda

ANTHONY LYNN MILLER LICENSE No. 58705 STATE OF FLORIDA PROFESSIONAL ENGINEER
A. LYNN MILLER, P.E.
P.E.# 58705

PGT®
CERT. OF AUTH. #29296
1070 TECHNOLOGY DRIVE
N. VENICE, FL 34275
(941)-480-1600

Title	VINYL CASEMENT WINDOW NOA (NI)			Date	9/9/14
Desc.	FLANGE & EQUAL-LEG/BOX FRAMES		Drawn By	J ROSOWSKI	
Rev 1				Rev 1 Date	
Rev 2				Rev 2 Date	
Series	CA-5440	Scale NTS	Sheet 3 OF 11	DWG No. MD-5440C.0	Rev. No.

INSTALLATION OPTION 5

ANCHORED THROUGH INTEGRAL FIN INTO 2X WOOD FRAME OR BUCKSTRIP. SEE NOTE 2, THIS SHEET.

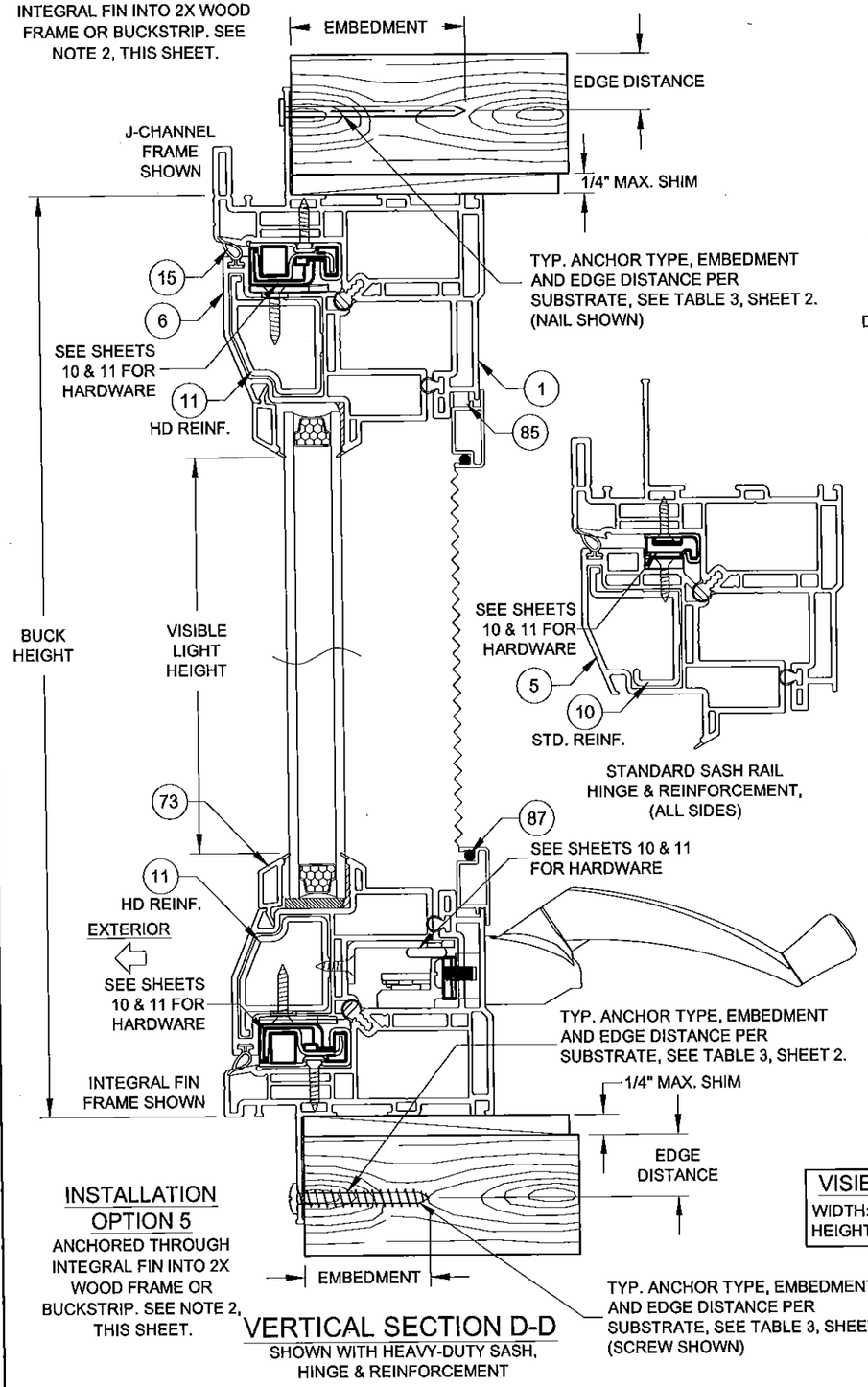

INSTALLATION OPTION 5

ANCHORED THROUGH INTEGRAL FIN INTO 2X WOOD FRAME OR BUCKSTRIP. SEE NOTE 2, THIS SHEET.

VERTICAL SECTION D-D

SHOWN WITH HEAVY-DUTY SASH, HINGE & REINFORCEMENT

INSTALLATION OPTION 6

ANCHORED THROUGH FRAME INTO 2X WOOD FRAME OR BUCKSTRIP. SEE NOTE 2, THIS SHEET.

INSTALLATION OPTION 5

ANCHORED THROUGH INTEGRAL FIN INTO 2X WOOD FRAME OR BUCKSTRIP. SEE NOTE 2, THIS SHEET.

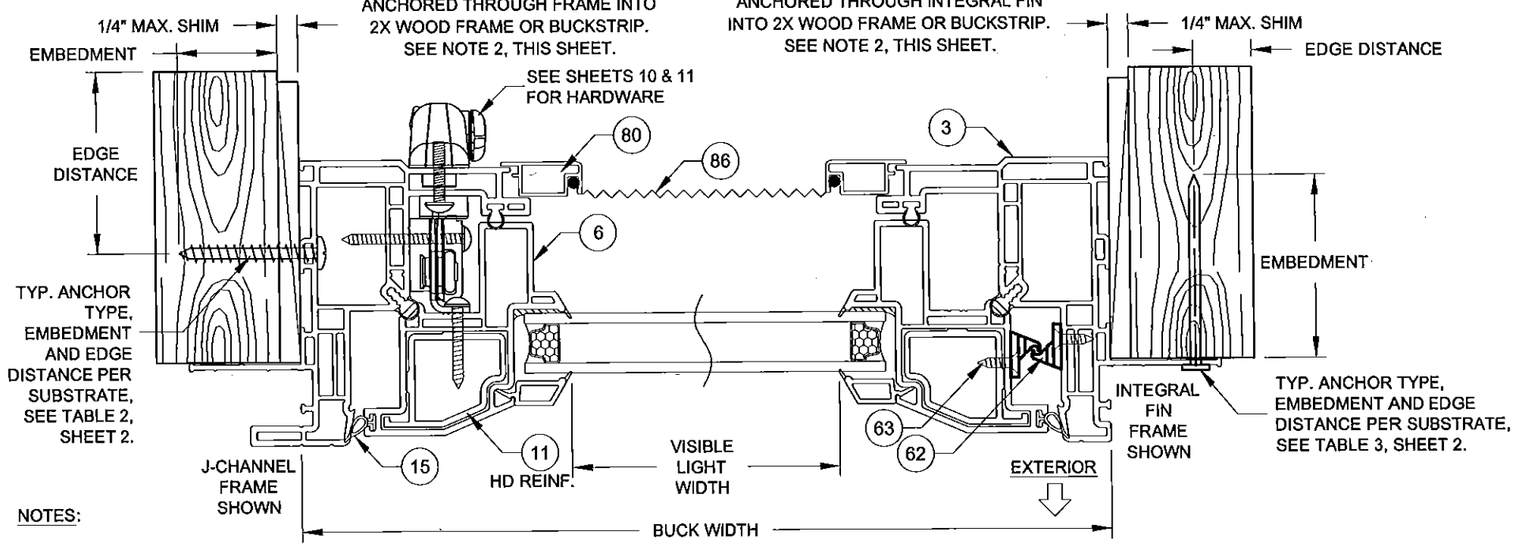

NOTES:

1) USE ONLY SUBSTRATE-APPROPRIATE ANCHORS LISTED ON TABLES 2 & 3, SHEET 2. FOLLOW EMBEDMENT AND EDGE DISTANCE LIMITS. ANY INSTALLATION OPTION SHOWN MAY BE USED ON ANY SIDE OF THE WINDOW.

2) MASONRY ANCHORS MAY BE USED INTO WOOD AS PER TABLE 2, SHEET 2. ALL WOOD BUCKS LESS THAN 1-1/2" THICK ARE TO BE CONSIDERED 1X INSTALLATIONS. 1X WOOD BUCKS ARE OPTIONAL IF UNIT IS INSTALLED DIRECTLY TO SUBSTRATE. WOOD BUCKS DEPICTED AS 2X ARE 1-1/2" THICK OR GREATER. 1X AND 2X BUCKS (WHEN USED) SHALL BE DESIGNED AND SECURED TO PROPERLY TRANSFER LOADS TO THE STRUCTURE. WOOD BUCK DESIGN AND INSTALLATION IS THE RESPONSIBILITY OF THE ENGINEER OR ARCHITECT OF RECORD.

3) VISIBLE LIGHT WIDTH OR HEIGHT (ALSO REFERRED TO AS DAYLIGHT OPENING) IS MEASURED FROM BEADING TO BEADING.

HORIZONTAL SECTION C-C

SHOWN WITH HEAVY-DUTY SASH, HINGE & REINFORCEMENT

DADE APPROVED MULLION, FBC COMPLIANT ALUMINUM/STEEL FRAMING OR STEEL STUD. MAY BE VERTICAL OR HORIZONTAL. SEE SUBSTRATE PROPERTIES, TABLES 2 & 3, SHEET 2.

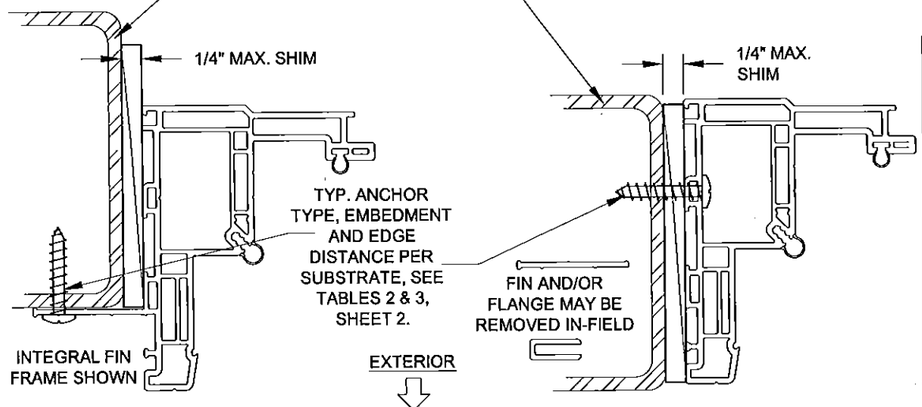

INSTALLATION OPTION 7

ANCHORED THROUGH FRAME INTO METAL

INSTALLATION OPTION 8

ANCHORED THROUGH FRAME INTO METAL

VISIBLE LIGHT FORMULAS

WIDTH: BUCK WIDTH - 6-3/4"
HEIGHT: BUCK HEIGHT - 6-3/4"

CERT. OF AUTH. #29296
1070 TECHNOLOGY DRIVE
N. VENICE, FL 34275
(941)-480-1600

Title	VINYL CASEMENT WINDOW NOA (NI)				Date	9/9/14	
Desc.	J-CHANNEL & INTEGRAL FIN FRAMES			Drawn By	J ROSOWSKI		
Rev 1					Rev 1 Date		
Rev 2					Rev 2 Date		
Series	CA-5440	Scale	NTS	Sheet	4 OF 11	DWG No.	MD-5440C.0	Rev. No.	

Approved as complying with the Florida Building Code
Date 9/17/15
NOA# 15-0420.12
Miami Dade Product Control
By Ishaq I. Chanda

ANTHONY LYNN MILLER LICENSE No. 58705 STATE OF FLORIDA PROFESSIONAL ENGINEER
9/11/15

A. LYNN MILLER, P.E.
P.E.# 58705

ILLUSTRATION OF CASEMENT-TO-CASEMENT (X-X)
(EQUAL LEG/BOX FRAME WITH IDENTICAL PRODUCTS COMBINED)

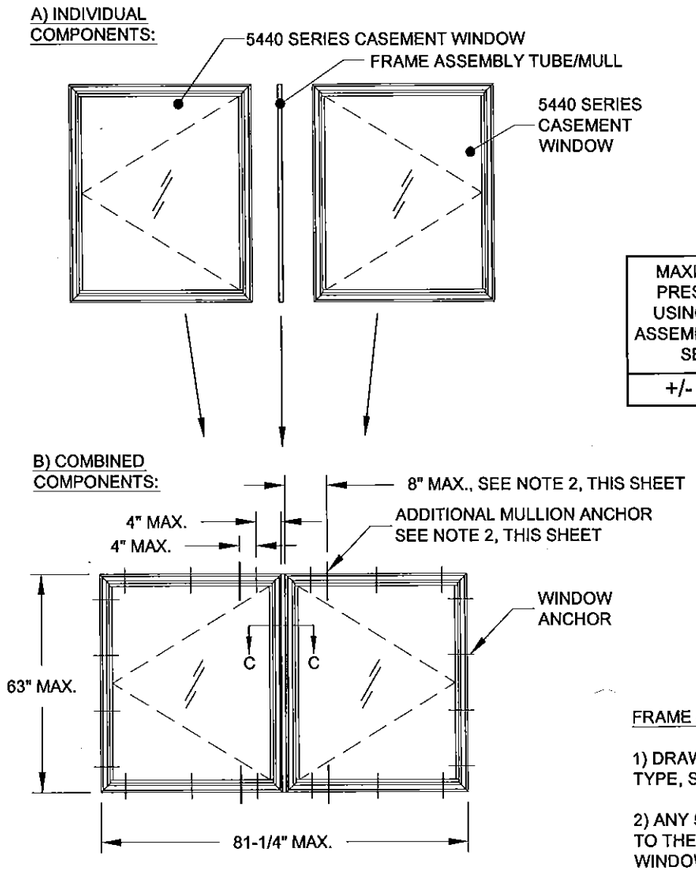

MAXIMUM DESIGN PRESSURE WHEN USING THE FRAME ASSEMBLY TUBE/MULL, SEE NOTE 2:
+/- 70.0 PSF

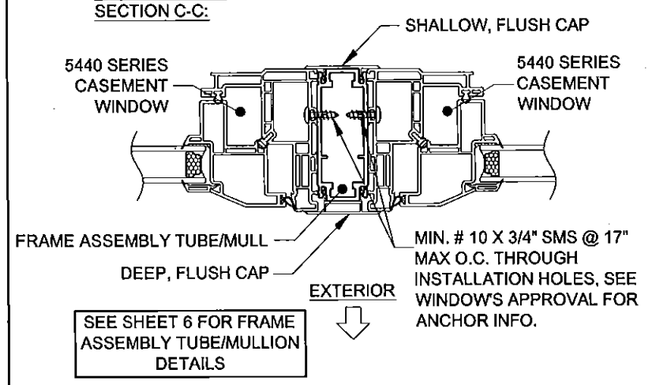

SEE SHEET 6 FOR FRAME ASSEMBLY TUBE/MULLION DETAILS

ILLUSTRATION OF AWNING-TO-CASEMENT-TO-FIXED CASEMENT (X/X/O)
(FLANGE FRAME WITH DIFFERENT 5440 SERIES PRODUCTS COMBINED)

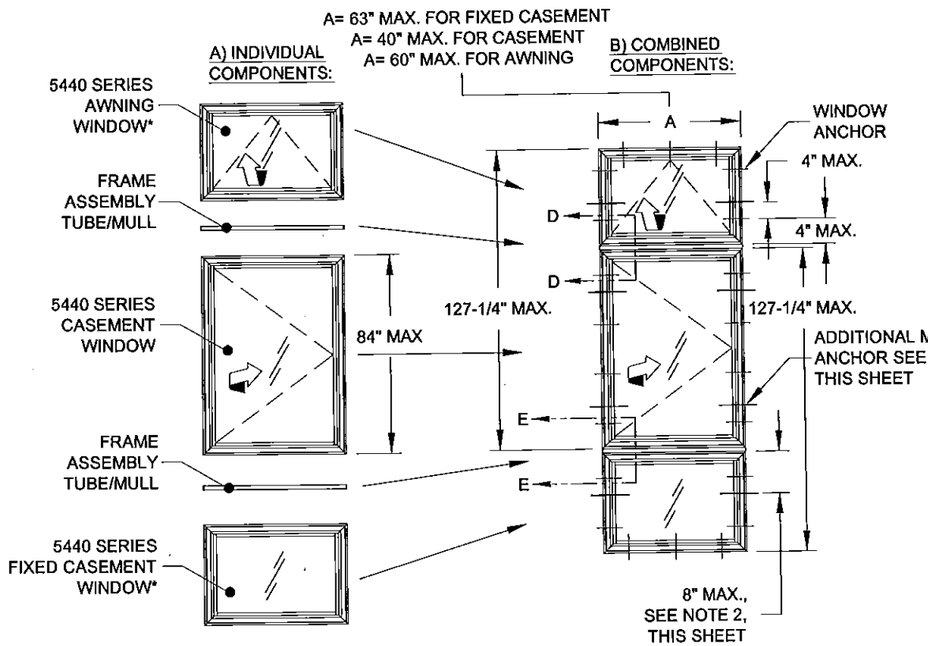

*UNDER SEPARATE APPROVAL

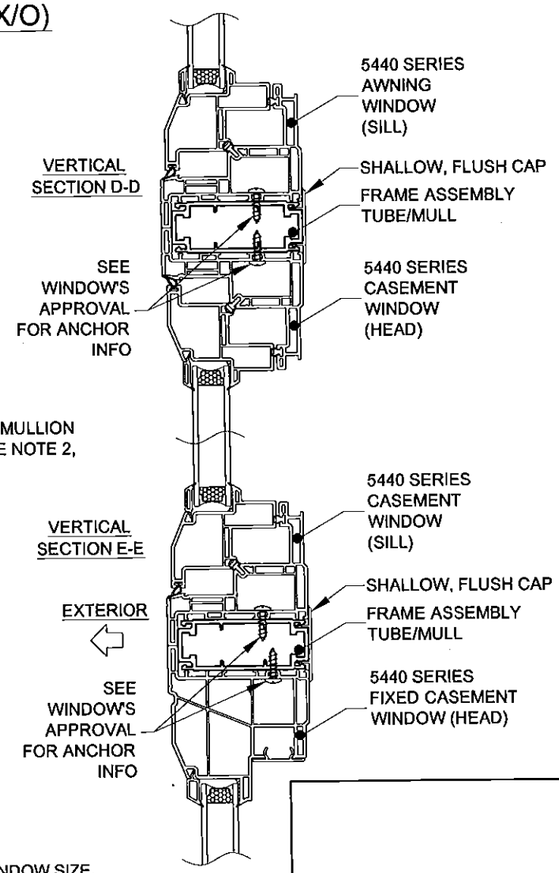

FRAME ASSEMBLY TUBE/MULL NOTES, ALSO SEE NEXT SHEET:

1) DRAWINGS SHOWN ON THIS SHEET ARE EXAMPLE CONFIGURATIONS FOR ALL FRAME TYPES. ADDITIONAL CONFIGURATIONS BASED ON WINDOW SIZE, TYPE, SHAPE, QUANTITY AND FRAME ASSEMBLY TUBE ORIENTATION ARE PERMISSIBLE FOLLOWING THE GUIDELINES OF THIS SHEET.

2) ANY 5440-SERIES CASEMENT, FIXED CASEMENT (UNDER SEPARATE APPROVAL) OR AWNING (UNDER SEPARATE APPROVAL) WINDOW MAY BE ATTACHED TO THE FRAME ASSEMBLY TUBE/MULL, IN ANY COMBINATION TO THE SPAN AND WIDTH LIMIT SHOWN. FOR ALL WINDOWS IN THE ASSEMBLY, USE EACH WINDOW'S INDIVIDUAL APPROVAL FOR ANCHORAGE, SIZE AND DESIGN PRESSURE LIMITATIONS. THE LOWEST DESIGN PRESSURE OF THE WINDOWS OR FRAME ASSEMBLY TUBE/MULL APPLIES TO THE ENTIRE ASSEMBLY .

3) FOR ALL COMBINATION UNITS, ADDITIONAL INSTALLATION ANCHORS ARE REQUIRED TO BE INSTALLED THROUGH THE WINDOW FRAMES, AS SHOWN ON THIS SHEET, ON EACH SIDE OF THE FRAME ASSEMBLY TUBE/MULL WHEN USING FLANGE OR EQUAL-LEG/BOX FRAMES. FOR FIN OR J-CHANNEL FRAMES ADDITIONAL ANCHORS AND END CAPS ARE REQUIRED AS SHOWN ON SHEET 6.

4) FOR FLANGE OR EQUAL-LEG/BOX FRAMES, THE FRAME ASSEMBLY TUBE TO BE FASTENED TO WINDOW, AS SHOWN IN DETAILS, WITH MIN. #10 X 1" SHEET METAL SCREWS. USE THE SAME SPACING AND QUANTITY AS THE WINDOW INSTALLATION ANCHORS GIVEN IN THAT PRODUCT'S APPROVAL, UP TO 17" MAX. O.C., ADD ADDITIONAL ANCHORS AS NEEDED. THE FRAME ASSEMBLY TUBE IS NOT REQUIRED TO BE CLIPPED TO THE SUBSTRATE. ALL EXTERIOR JOINTS TO BE SEALED BY INSTALLER.

5) THE FRAME ASSEMBLY TUBE/MULL MAY NOT EXCEED 63" IN LENGTH OR BE USED IN TEE OR CROSS CONFIGURATIONS. TWO ADJACENT WINDOWS MAY NOT EXCEED A TOTAL OF 127-1/4" IN WIDTH OR HEIGHT, FROM WINDOW BUCK TO WINDOW BUCK, INCLUDING THE FRAME ASSEMBLY TUBE/MULL WIDTH.

6) SHEET 5 & 6 REFER TO UNCLIPPED MULLION ASSEMBLIES. FOR CLIPPED MULLION ASSEMBLIES SEE TUBE MULLION UNDER SEPARATE APPROVAL.

Approved as complying with the Florida Building Code
Date 9/17/15
NOA# 15-0420.12
Miami Dade Product Control
By Ishaq I. Chanda

PGT®
CERT. OF AUTH. #29296
1070 TECHNOLOGY DRIVE
N. VENICE, FL 34275
(941)-480-1600

ANTHONY LYNN MILLER LICENSE No. 58705 STATE OF FLORIDA PROFESSIONAL ENGINEER
9/11/15
A. LYNN MILLER, P.E.
P.E.# 58705

Title	VINYL CASEMENT WINDOW NOA (NI)				Date	9/9/14	
Desc.	FRAME ASSEMBLY TUBE DETAILS A			Drawn By	J ROSOWSKI		
Rev 1					Rev 1 Date		
Rev 2					Rev 2 Date		
Series	CA-5440	Scale	NTS	Sheet	5 OF 11	DWG No.	MD-5440C.0	Rev. No.	

ILLUSTRATION OF END CAP USE WITH FIN AND J-CHANNEL FRAMES

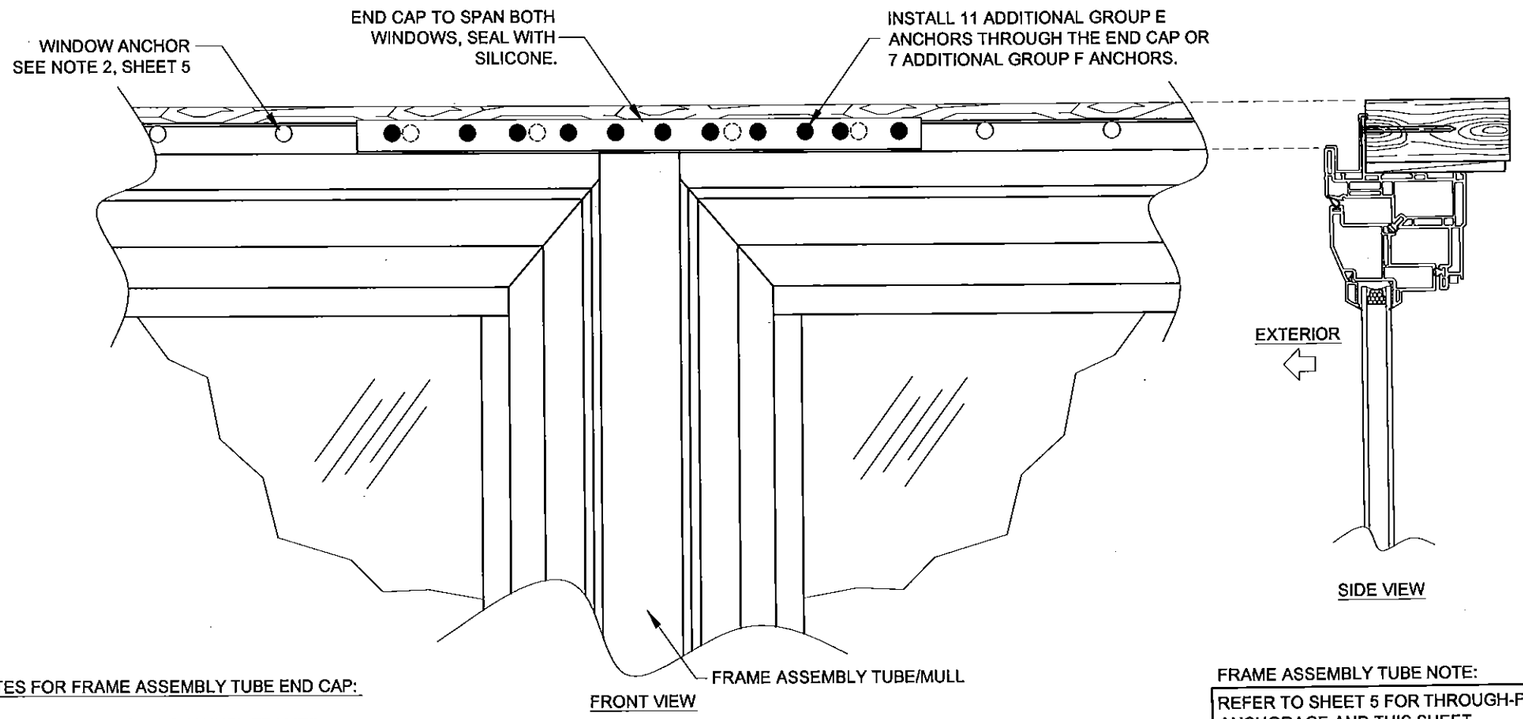

FRONT VIEW

SIDE VIEW

NOTES FOR FRAME ASSEMBLY TUBE END CAP:

1) APPLIES TO FIN OR J-CHANNEL FRAMES.

2) REQUIRED AT HEADER/SILL OR JAMBS TO SEAL THE END OF THE FRAME ASSEMBLY TUBE.

3) ALL WINDOW TYPES AND FRAME ASSEMBLY TUBE ORIENTATIONS APPLICABLE, SEE SHEET 5.

4) END CAP MAY REQUIRE IN-FIELD TRIMMING. STANDARD LENGTH IS 14".

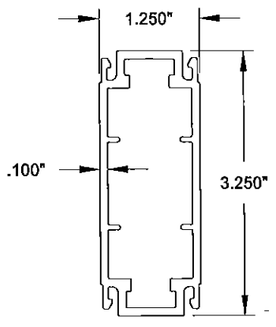

(90) FRAME ASSEMBLY TUBE, ALUM 6005-T5

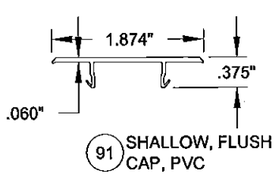

(91) SHALLOW, FLUSH CAP, PVC

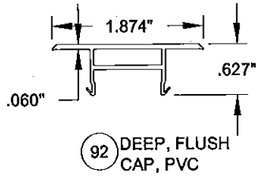

(92) DEEP, FLUSH CAP, PVC

EITHER CAP MAY BE USED TO THE INTERIOR OR EXTERIOR.

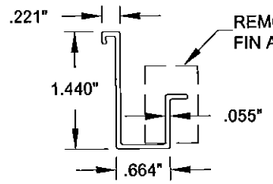

(93) FRAME ASSEMBLY TUBE END CAP, PVC

EXAMPLE CONFIGURATIONS WHEN USING THE FRAME ASSEMBLY TUBE/MULL. FOR TEES, CROSSES OR ASSEMBLIES WITH MORE THAN 4 UNITS USE CLIPPED, TUBE MULLION UNDER SEPARATE APPROVAL.

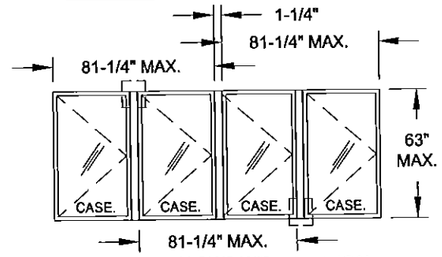

2 OR MORE WINDOWS WITH VERTICAL FRAME ASSEMBLY TUBE/MULL. (4 WINDOWS MAX.)

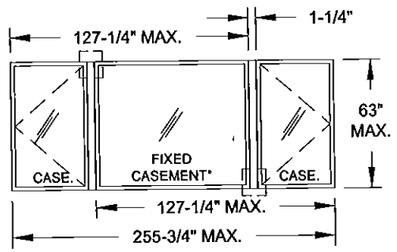

2 OR MORE WINDOWS WITH VERTICAL FRAME ASSEMBLY TUBE/MULL. VARIOUS WINDOW TYPES AND SIZES (4 WINDOWS MAX.)

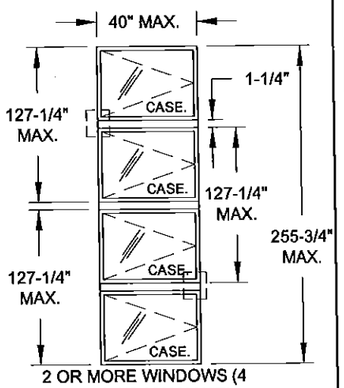

2 OR MORE WINDOWS (4 WINDOWS MAX.) WITH HORIZONTAL FRAME ASSEMBLY TUBE/MULL.

A= 63" MAX. FOR FIXED CASEMENT
A= 40" MAX. FOR CASEMENT
A= 60" MAX. FOR AWNING

FRAME ASSEMBLY TUBE NOTE:

REFER TO SHEET 5 FOR THROUGH-FRAME ANCHORAGE AND THIS SHEET FOR NAIL FIN ANCHORAGE DETAILS TYP. AT ALL FRAME ASSEMBLY TUBE ENDS BOTH HORIZONTAL AND VERTICAL

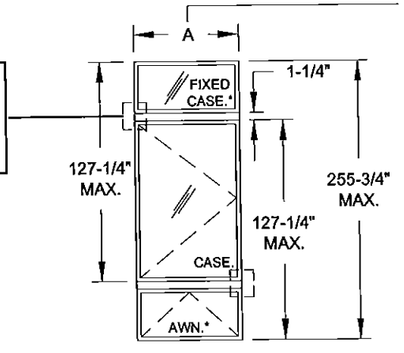

2 OR MORE WINDOWS (4 WINDOWS MAX.) WITH HORIZONTAL FRAME ASSEMBLY TUBE/MULL. VARIOUS WINDOW TYPES AND SIZES.

*UNDER SEPARATE APPROVAL

Approved as complying with the Florida Building Code
Date 9/17/15
NOA# 15-0420.12
Miami Dade Product Control
By Ishaq I. Ahmad

PGT®
CERT. OF AUTH. #29296
1070 TECHNOLOGY DRIVE
N. VENICE, FL 34275
(941)-480-1600

Title	VINYL CASEMENT WINDOW NOA (NI)			Date	9/9/14
Desc.	FRAME ASSEMBLY TUBE DETAILS B			Drawn By	J ROSOWSKI
Rev 1				Rev 1 Date	
Rev 2				Rev 2 Date	
Series	CA-5440	Scale	NTS	Sheet	6 OF 11
DWG No.	MD-5440C.0	Rev. No.			

ANTHONY LYNN MILLER
LICENSE
No. 58705
STATE OF FLORIDA
PROFESSIONAL ENGINEER
9/11/15
A. LYNN MILLER, P.E.
P.E.# 58705

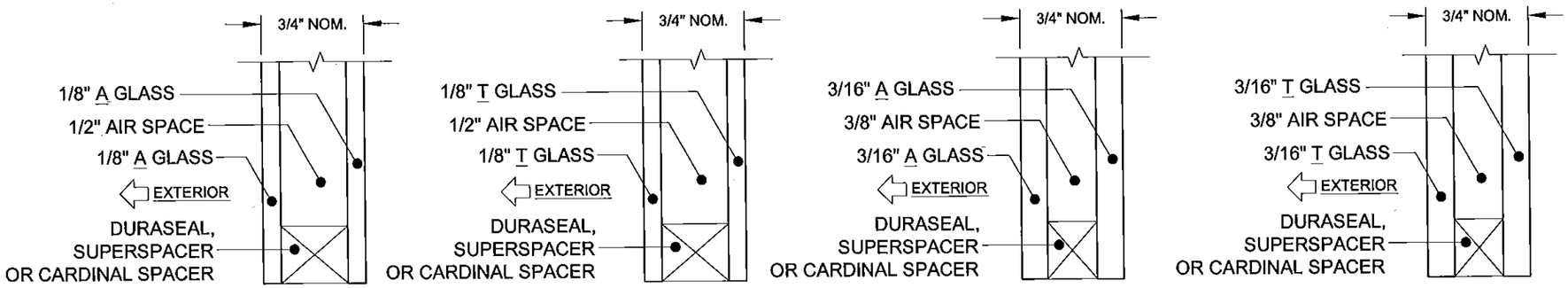

GLASS TYPE 1 GLASS TYPE 2 GLASS TYPE 3 GLASS TYPE 4

GLAZING NOTES:
"A" = ANNEALED
"T" = TEMPERED

REFER TO TYP. GLAZING DETAIL ON SHEET 2.

Approved as complying with the Florida Building Code
Date 9/17/15
NOA# 15-0420.12
Miami Dade Product Control
By [signature]

Rev 3	Rev 2	Rev 1

1070 TECHNOLOGY DRIVE
N. VENICE, FL 34275
(941)-480-1600

CERT. OF AUTH. #29296

Title	Date	Drawn By	DWG No.	Rev.
VINYL CASEMENT WINDOW NOA (NI)	9/9/14	J ROSOWSKI	MD-5440C.0	

Desc.	Series	Scale	Sheet
GLAZING DETAILS	CA-5440	NTS	7 OF 11

ANTHONY LYNN MILLER
LICENSE
No. 58705
STATE OF FLORIDA
PROFESSIONAL ENGINEER
9/11/15

A. LYNN MILLER, P.E.
P.E.# 58705

TABLE 4:

Window Design Pressure, (+/- psf)						Standard Sash, Hinge & Reinforcement	Use this table for Glass Type:	1
1/8" A CAP, AIRSPACE, 1/8" A								
Window Dimensions		Buck Width (in)						
		24	26	28	30	32	34	36
Buck Height (in)	24	+65/-114	+65/-114	+65/-114	+65/-114	+65/-114	+65/-114	+65/-114
	30	+65/-95	+65/-92.9	+65/-91.6	+65/-91.2	+65/-91.2	+65/-91.2	+65/-91.2
	36	+65/-85.5	+65/-82.4	+65/-79.9	+65/-78.2	+65/-77	+65/-76.2	+65/-76
	42	+65/-79.8	+65/-76.2	+65/-73.3	+65/-70.9	+65/-69.1	+65/-67.6	+65/-66.5
	48	+65/-76	+65/-72.2	+65/-69	+65/-66.3	+/-64.1	+/-62.3	+/-60.8
	54	+65/-73.3	+65/-69.3	+65/-66	+/-63.1	+/-60.8	+/-58.7	+/-57
	60	+65/-71.3	+65/-67.2	+/-63.7	+/-60.8	+/-58.3	+/-56.1	+/-54.3
	66	+65/-69.7	+/-61.2	+/-55.8	+/-54.6	+/-54.9	+/-54.2	+/-52.3
	72	+65/-67.1	+/-56.6	+/-50.9	+/-48	+/-47.6	+/-48.4	+/-48.9
	75	+65/-65.8	+/-54.9	+/-48.8	+/-45.7	+/-45.1	+/-45.3	+/-46

MAX. JAMB O.C. SPACING IF ANCHORING THROUGH THE FRAME PER SHEETS 3 & 4	MAX. O.C. SPACING IF ANCHORING THROUGH THE INTEGRAL FIN PER SHEET 4
APPLIES TO A, B, C OR D ANCHORS (SEE TABLE 2)	APPLIES TO E OR F ANCHORS (SEE TABLE 3)
12.67"	3.05" FOR E ANCHORS, 4" FOR F ANCHORS

NOTES:
1) BUCK DIMENSIONS SHOWN.

2) FOR SIZES NOT SHOWN, ROUND UP TO THE NEXT AVAILABLE WIDTH OR HEIGHT DIMENSION.

TABLE 5:

Window Design Pressure, (+/- psf)						Standard Sash, Hinge & Reinforcement	Use this table for Glass Type:	2, 3 & 4
1/8" T CAP, AIRSPACE, 1/8" T								
3/16" A CAP, AIRSPACE, 3/16"A								
3/16" T CAP, AIRSPACE, 3/16" T								
Window Dimensions		Buck Width (in)						
		24	26	28	30	32	34	36
Buck Height (in)	24	+65/-114	+65/-114	+65/-114	+65/-114	+65/-114	+65/-114	+65/-114
	30	+65/-95	+65/-92.9	+65/-91.6	+65/-91.2	+65/-91.2	+65/-91.2	+65/-91.2
	36	+65/-85.5	+65/-82.4	+65/-79.9	+65/-78.2	+65/-77	+65/-76.2	+65/-76
	42	+65/-79.8	+65/-76.2	+65/-73.3	+65/-70.9	+65/-69.1	+65/-67.6	+65/-66.5
	48	+65/-76	+65/-72.2	+65/-69	+65/-66.3	+/-64.1	+/-62.3	+/-60.8
	54	+65/-73.3	+65/-69.3	+65/-66	+/-63.1	+/-60.8	+/-58.7	+/-57
	60	+65/-71.3	+65/-67.2	+/-63.7	+/-60.8	+/-58.3	+/-56.1	+/-54.3
	66	+65/-69.7	+65/-65.5	+/-62	+/-59	+/-56.4	+/-54.2	+/-52.3
	72	+65/-68.4	+/-64.2	+/-60.7	+/-57.6	+/-55	+/-52.7	+/-50.7
	75	+65/-67.9	+/-63.6	+/-60.1	+/-57	+/-54.3	+/-52	+/-50

MAX. JAMB O.C. SPACING IF ANCHORING THROUGH THE FRAME PER SHEETS 3 & 4	MAX. O.C. SPACING IF ANCHORING THROUGH THE INTEGRAL FIN PER SHEET 4
APPLIES TO A, B, C OR D ANCHORS (SEE TABLE 2)	APPLIES TO E OR F ANCHORS (SEE TABLE 3)
12.67"	3.05" FOR E ANCHORS, 4" FOR F ANCHORS

Approved as complying with the Florida Building Code
Date 9/17/15
NOA# 15-0420.12
Miami Dade Product Control
By Ishaq I. Chanda

CERT. OF AUTH. #29296
1070 TECHNOLOGY DRIVE
N. VENICE, FL 34275
(941)-480-1600

Title	VINYL CASEMENT WINDOW NOA (NI)			Date	9/9/14
Desc.	DESIGN PRESSURE TABLES A		Drawn By		J ROSOWSKI
Rev 1				Rev 1 Date	
Rev 2				Rev 2 Date	
Series	CA-5440	Scale	NTS	Sheet	8 OF 11
DWG No.	MD-5440C.0	Rev. No.			

ANTHONY LYNN MILLER
LICENSE
No. 58705
STATE OF FLORIDA
PROFESSIONAL ENGINEER
9/11/15
A. LYNN MILLER, P.E.
P.E.# 58705

TABLE 6:

Window Design Pressure, (+/- psf)	Heavy-Duty Sash, Hinge & Reinforcement	Use this table for Glass Type:	2 & 4
1/8" T CAP, AIRSPACE, 1/8" T & 3/16" T CAP, AIRSPACE, 3/16" T			

Window Dimensions		Buck Width (in)								
		24	26	28	30	32	34	36	38	40
Buck Height (in)	24	+65/-130	+65/-130	+65/-130	+65/-130	+65/-130	+65/-130	+65/-130	+65/-130	+65/-130
	30	+65/-130	+65/-130	+65/-130	+65/-130	+65/-130	+65/-130	+65/-130	+65/-130	+65/-130
	36	+65/-130	+65/-128.4	+65/-124.7	+65/-121.9	+65/-120	+65/-118.9	+65/-118.5	+65/-118.5	+65/-118.5
	42	+65/-124.4	+65/-118.8	+65/-114.3	+65/-110.6	+65/-107.7	+65/-105.4	+65/-103.7	+65/-102.5	+65/-101.8
	48	+65/-118.5	+65/-112.5	+65/-107.6	+65/-103.4	+65/-100	+65/-97.2	+65/-94.8	+65/-92.9	+65/-91.4
	54	+65/-114.3	+65/-108.1	+65/-102.9	+65/-98.5	+65/-94.7	+65/-91.6	+65/-88.9	+65/-86.6	+65/-84.7
	60	+65/-111.1	+65/-104.7	+65/-99.4	+65/-94.8	+65/-90.9	+65/-87.6	+65/-84.7	+65/-82.2	+65/-80
	66	+65/-108.6	+65/-102.2	+65/-96.7	+65/-92	+65/-88	+65/-84.5	+65/-81.5	+65/-78.8	+65/-76.5
	72	+65/-106.7	+65/-100.1	+65/-94.6	+65/-89.8	+65/-85.7	+65/-82.1	+65/-79	+65/-76.3	+65/-73.8
	76	+65/-105.6	+65/-99	+65/-93.4	+65/-88.6	+65/-84.4	+65/-80.8	+65/-77.7	+65/-74.9	+65/-72.4
	80	+65/-104.6	+65/-98	+65/-92.4	+65/-87.5	+65/-83.3	+65/-79.7	+65/-76.5	+65/-73.6	+65/-71.1
	84	+65/-103.7	+65/-97.1	+65/-91.4	+65/-86.6	+65/-82.4	+65/-78.7	+65/-75.4	+65/-72.6	+65/-70

MAX. JAMB O.C. SPACING IF ANCHORING THROUGH THE FRAME PER SHEETS 3 & 4	MAX. O.C. SPACING IF ANCHORING THROUGH THE INTEGRAL FIN PER SHEET 4
APPLIES TO B, C OR D ANCHORS (SEE TABLE 2)	APPLIES TO F ANCHORS (SEE TABLE 3)
12.67"	4"

NOTES:
1) BUCK DIMENSIONS SHOWN.

2) FOR SIZES NOT SHOWN, ROUND UP TO THE NEXT AVAILABLE WIDTH OR HEIGHT DIMENSION.

TABLE 7:

Window Design Pressure, (+/- psf)	Heavy-Duty Sash, Hinge & Reinforcement	Use this table for Glass Type:	3
3/16" A CAP, AIRSPACE, 3/16" A			

Window Dimensions		Buck Width (in)								
		24	26	28	30	32	34	36	38	40
Buck Height (in)	24	+65/-130	+65/-130	+65/-130	+65/-130	+65/-130	+65/-130	+65/-130	+65/-130	+65/-130
	30	+65/-130	+65/-130	+65/-130	+65/-130	+65/-130	+65/-130	+65/-130	+65/-130	+65/-130
	36	+65/-130	+65/-128.4	+65/-124.7	+65/-121.9	+65/-120	+65/-118.9	+65/-118.5	+65/-118.5	+65/-118.5
	42	+65/-124.4	+65/-118.8	+65/-114.3	+65/-110.6	+65/-107.7	+65/-105.4	+65/-103.7	+65/-102.5	+65/-101.8
	48	+65/-118.5	+65/-112.5	+65/-107.6	+65/-103.4	+65/-100	+65/-97.2	+65/-94.8	+65/-92.9	+65/-91.4
	54	+65/-114.3	+65/-108.1	+65/-102.9	+65/-98.5	+65/-94.7	+65/-91.6	+65/-88.9	+65/-86.6	+65/-84.7
	60	+65/-111.1	+65/-104.7	+65/-99.4	+65/-94.8	+65/-90.9	+65/-87.6	+65/-84.7	+65/-82.2	+65/-80
	66	+65/-108.6	+65/-102.2	+65/-96.7	+65/-92	+65/-88	+65/-84.5	+65/-81.5	+65/-78.8	+65/-76.5
	72	+65/-106.7	+65/-100.1	+65/-94.6	+65/-89.8	+65/-85.7	+65/-80.2	+65/-76	+65/-74.2	+65/-73.6
	76	+65/-105.6	+65/-99	+65/-93.4	+65/-88.6	+65/-83.2	+65/-75.3	+65/-71.7	+65/-70	+65/-69
	80	+65/-104.6	+65/-98	+65/-92.4	+65/-87.5	+65/-79.9	+65/-72.5	+65/-68.2	+65/-65.6	+/-64.5
	84	+65/-103.7	+65/-97.1	+65/-91.4	+65/-86.6	+65/-77.1	+65/-70	+/-65	+/-61.7	+/-59.7

MAX. JAMB O.C. SPACING IF ANCHORING THROUGH THE FRAME PER SHEETS 3 & 4	MAX. O.C. SPACING IF ANCHORING THROUGH THE INTEGRAL FIN PER SHEET 4
APPLIES TO B, C OR D ANCHORS (SEE TABLE 2)	APPLIES TO F ANCHORS (SEE TABLE 3)
12.67"	4"

Approved as complying with the
Florida Building Code
Date 9/17/15
NOA# 15-0420.12
Miami Dade Product Control
By Ichang I. Chang

CERT. OF AUTH. #29296
1070 TECHNOLOGY DRIVE
N. VENICE, FL 34275
(941)-480-1600

Title	VINYL CASEMENT WINDOW NOA (NI)				Date	9/9/14	
Desc.	DESIGN PRESSURE TABLES B			Drawn By	J ROSOWSKI		
Rev 1					Rev 1 Date		
Rev 2					Rev 2 Date		
Series	CA-5440	Scale	NTS	Sheet	9 OF 11	DWG No.	MD-5440C.0	Rev. No.	

ANTHONY LYNN MILLER
LICENSE
No. 58705
STATE OF FLORIDA
PROFESSIONAL ENGINEER
9/11/15
A. LYNN MILLER, P.E.
P.E.# 58705

Frame Height	Qty. Lock Points
< 32.249"	2
32.250"-48.249"	3
48.250"-64.249"	4
66.250"-76.249"	5
76.250"-84.000"	6

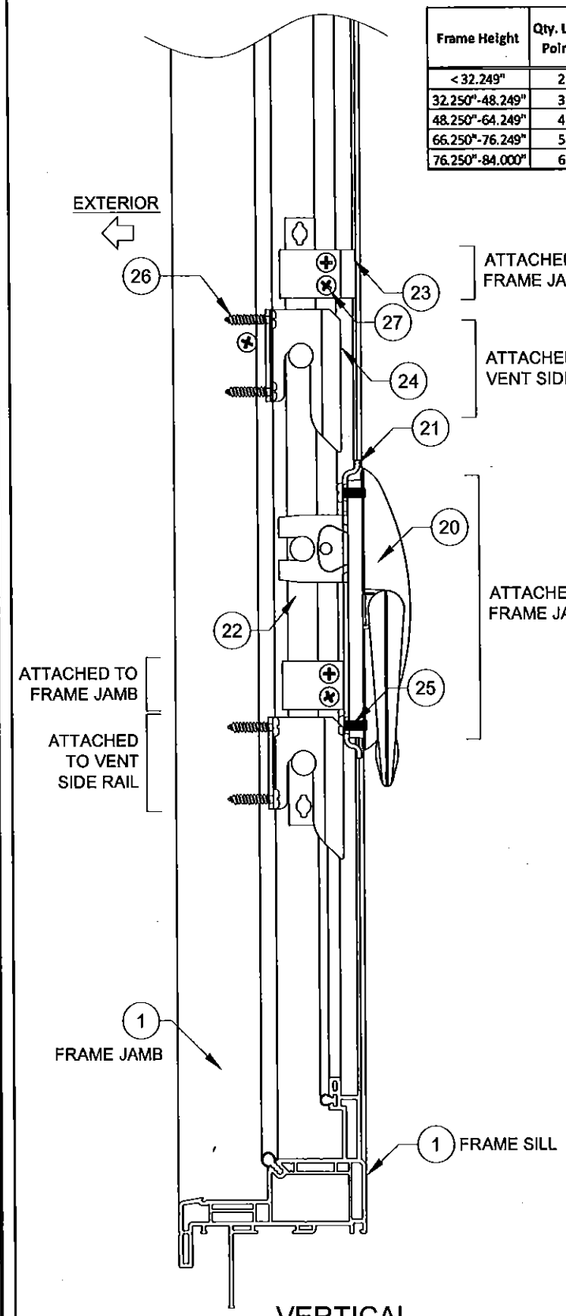

VERTICAL HARDWARE
LOCK JAMB

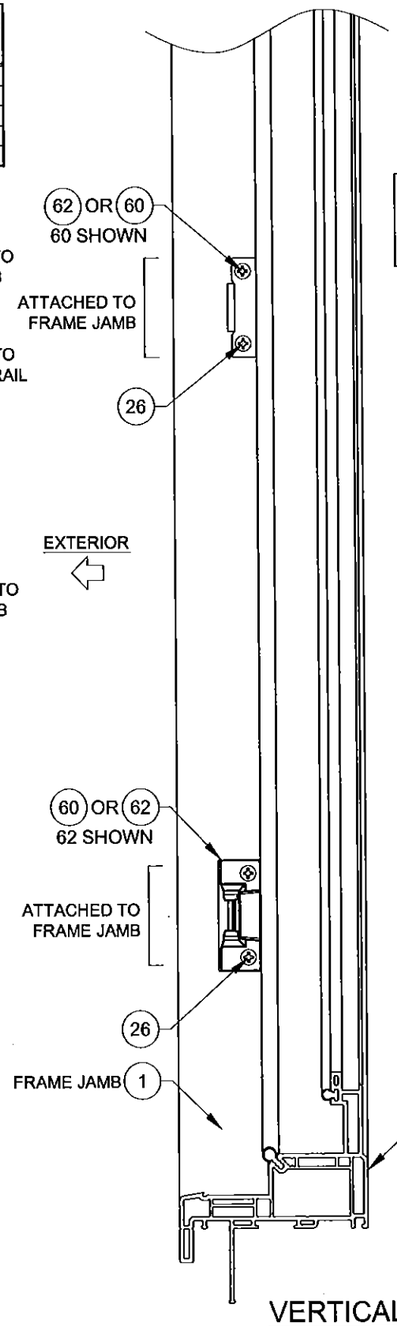

VERTICAL HARDWARE
HINGE JAMB

Frame Height	Qty. Snubbers
< 30.000"	2
30.001"-48.000"	3
48.001"-66.000"	4
66.001"-84.000"	5

60 USED ON STD. VENT ONLY
62 USED ON HD VENT ONLY

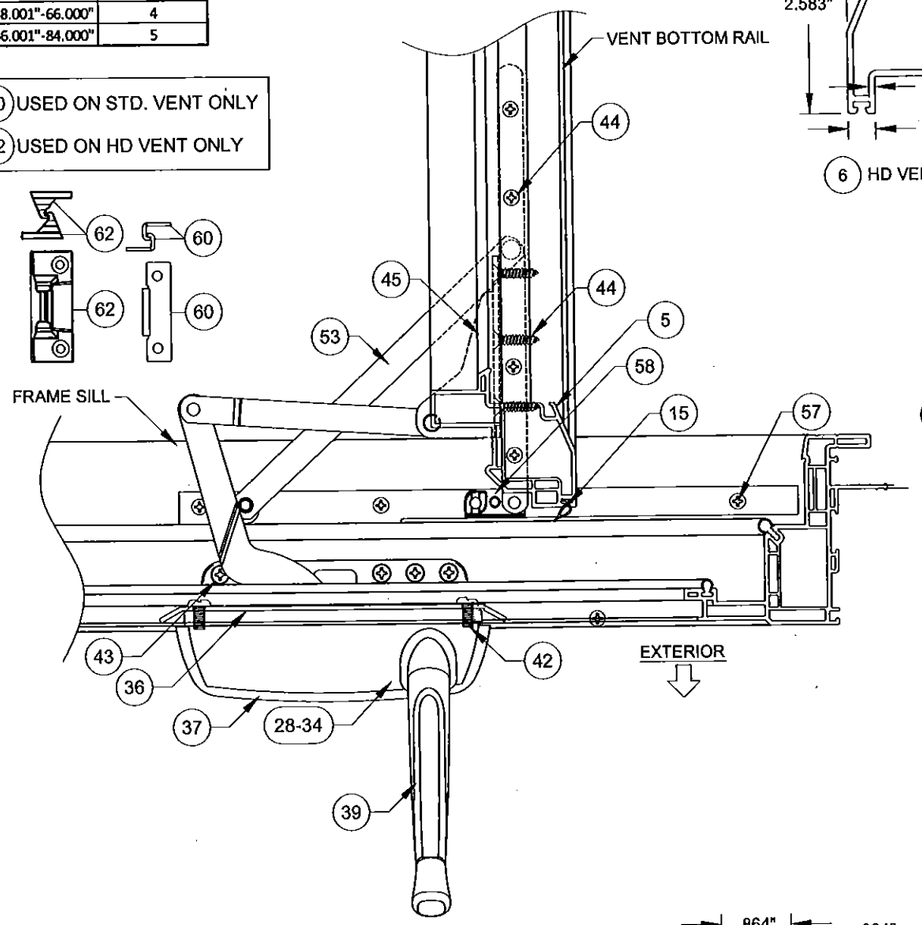

HORIZONTAL HARDWARE SECTION

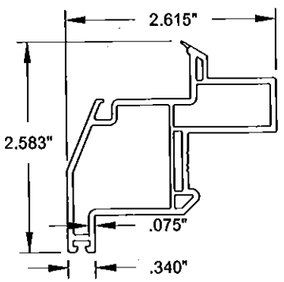

6 HD VENT RAIL

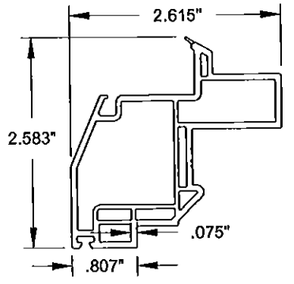

5 STANDARD VENT RAIL

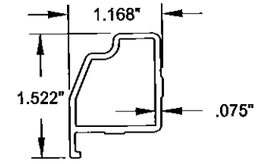

11 HD VENT REINFORCEMENT

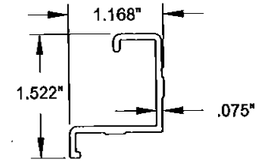

10 STANDARD VENT REINFORCEMENT

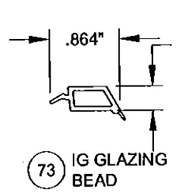

73 IG GLAZING BEAD

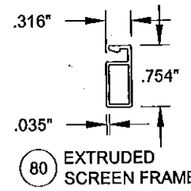

80 EXTRUDED SCREEN FRAME

NOTES:

1) SOME PARTS/OPTIONS NOT SHOWN FOR CLARITY.

2) INTEGRAL FIN FRAME SHOWN, PART #1. OTHER FRAME TYPES APPLY.

Approved as complying with the Florida Building Code
Date 9/17/15
NOA# 15-0426.12
Miami Dade Product Control
By Ishaq I. Ahmad

ANTHONY LYNN MILLER LICENSE No. 58705 STATE OF FLORIDA PROFESSIONAL ENGINEER
9/11/15
A. LYNN MILLER, P.E.
P.E.# 58705

PGT®
CERT. OF AUTH. #29296
1070 TECHNOLOGY DRIVE
N. VENICE, FL 34275
(941)-480-1600

Title	VINYL CASEMENT WINDOW NOA (NI)					Date	9/9/14
Desc.	BOM & ASSEMBLY A				Drawn By		J ROSOWSKI
Rev 1						Rev 1 Date	
Rev 2						Rev 2 Date	
Series	CA-5440	Scale	NTS	Sheet	10 OF 11	DWG No.	MD-5440C.0	Rev. No.	

TABLE 8:

1	620125	J-channel Frame	PVC
2	620126	Flange Frame	PVC
3	620127	Integral Fin Frame	PVC
4	620128	Equal Leg/Box Frame	PVC
5	620130	Standard Vent Rail	PVC
6	620173	HD Vent Rail	PVC
10	620163	Standard Vent Reinforcement (Full Length)	Alum. 6005-T5
11	620164	HD Vent Reinforcement (Full Length)	Alum. 6005-T5
15	6TP247	Weatherstrip, 65 +/-1 duro.	Flex PVC
20	7024	Multi-Point Lock	C Steel
21	7011	Multi-Point Lock Flat Support Plate	C Steel
22	varies with size	Tie Bar	C Steel
23	20222	Tie Bar Guide	C Steel
24	7014	Multi-Lock Keeper	C Steel
25	71024X0562PPFX	#10-24 x 9/16" Phl. PH Machine Screw	SS
26	78X34PPTX410	#8 x 3/4" Phl. PH Tek	SS
27	78X112PSAX	#8 x 1-1/2" Phl. FH Tek	SS
28	20249/50	Dyad Operator (narrow vent < or = to 24"), L/R	C Steel
29	20249X/50X	Dyad Operator (narrow vent < or = to 24"), L/R	SS
30	20251/52	Dual Arm Operator (wide vent >24"), L/R	C Steel
31	20251X/52X	Dual Arm Operator (wide vent >24"), L/R	SS
32	7033	Dual Arm Operator Track	SS
33	20241/42	HD Dual Arm Operator, L/R	C Steel
34	20241X/42X	HD Dual Arm Operator, L/R	SS
35	20244	HD Operator Track	SS
36	7031	Operator Backing Plate	C Steel
37	20253	Operator Cover	
38	7030	Operator Gasket White	Neoprene
39		Standard Handle	C Steel
40	7018	Folding Handle	C Steel
41	7019	T-Handle (Thumbturn)	C Steel
42	78X12PPMSX	#8-32 x 1/2" Phl. PH Machine Screw	SS
43	78S34PFAX	#8 x 3/4" Phl. FH	SS
44	78X1PSDX	#8 x 1" Phl. FH Tek	SS
45	7MC7032LH/RH	Stud Bracket, L/R	C Steel
46	7MC7032LHX/RHX	Stud Bracket,L/R	SS
47	20243	HD Stud Bracket, non-handed	C Steel
48	20243X	HD Stud Bracket, non-handed	SS
49	73337LH/RH	Egress Hinge, L/R	C Steel
50	73337LHX/RHX	Egress Hinge, L/R	SS
51	73338LH/RH	Washable Hinge, L/R	C Steel
52	73338LHX/RHX	Washable Hinge, L/R	SS
53	20245/6	HD Washable Hinge, L/R	C Steel
54	20245X/6X	HD Washable Hinge, L/R	SS
55	720247/8	HD Washable Hinge Track, L/R	C Steel
56	720247X/8X	HD Washable Hinge Track, L/R	SS
57	78X34FPAX	#8 x 3/4" Phl. FH w/ #7 Head	SS
58	731877	Operator Slide	Plastic
60	73346	Snubber	C Steel
61		Not Used	
62	720256	HD Snubber	Die-cast Zinc
63	78X12PPSMSX	#8 x 1/2" Phl. PH	SS
64	20187	Anchor Hole Plug	PVC
73	720136	IG Glazing Bead	PVC
74		Backbedding, GE 7700 or Dow 791	Silicone
75		Quanex SuperSpacer nXT with Hot Melt Butyl	Composite
76		Quanex Duraseal Spacer	Composite
77		Cardinal XL Edge Spacer	Composite
78	71646N	Setting Block (7/8" x 1" x 1/8"), 85 +/- 5 duro.	EPDM
80	67006	Extruded Screen Frame	
84	47040	Screen Corner Key	
85	7CASPM	Tension Spring	
86	61816C34	Screen Cloth	
87	61635/24	.140" Screen Spline (Machine/Hand Rolled)	
90	620160A	Frame Assembly Tube	Alum. 6005-T5
91	620177	Shallow, Flush Cap	PVC
92	620178	Deep, Flush Cap	PVC

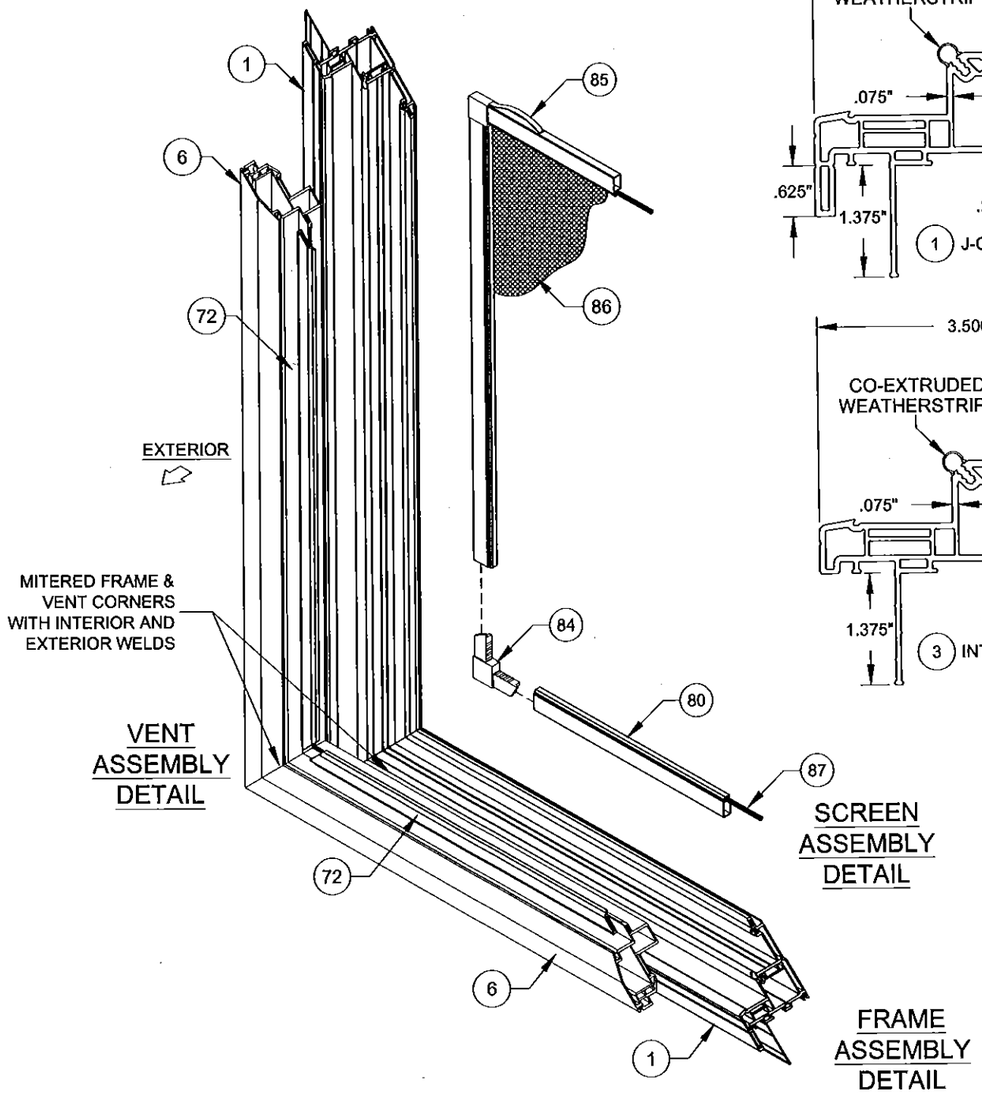

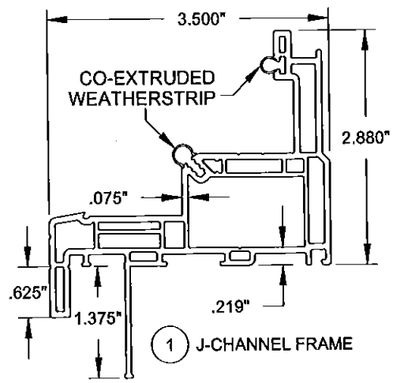

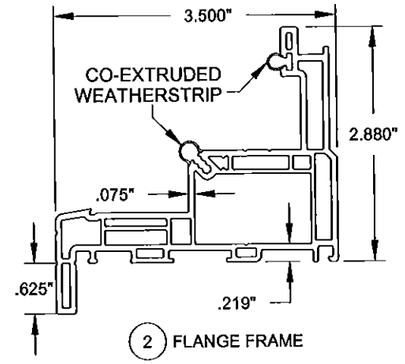

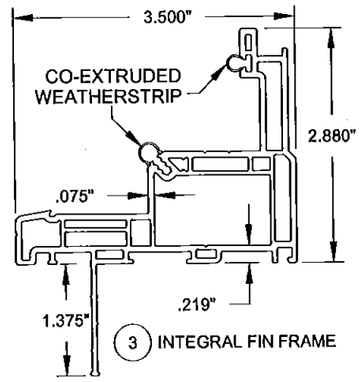

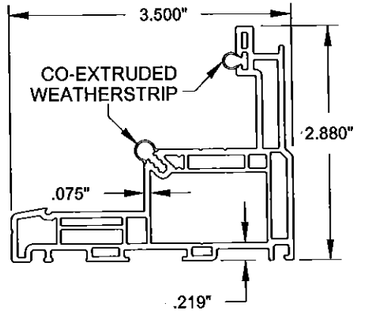

NOTES:

1) SOME PARTS/OPTIONS NOT SHOWN ON DRAWING FOR CLARITY.

2) J-CHANNEL FRAME SHOWN, PART #1. OTHER FRAME TYPES, PARTS #2 - 4, APPLY.

3) ITEMS # 7-9, 12-14, 16-19, 59, 61, 65-72, 79, 81-83, 88 & 89 ARE NOT USED AND ARE NOT PART OF THIS APPROVAL.

4) ROYAL PVC TO BE LABELED FOR AAMA EXTRUDER CODE.

PGT®
CERT. OF AUTH. #29296
1070 TECHNOLOGY DRIVE
N. VENICE, FL 34275
(941)-480-1600

Title	VINYL CASEMENT WINDOW NOA (NI)			Date	9/9/14
Desc.	BOM & ASSEMBLY B		Drawn By		J ROSOWSKI
Rev 1				Rev 1 Date	
Rev 2				Rev 2 Date	
Series	CA-5440	Scale	NTS	Sheet	11 OF 11
DWG No.	MD-5440C.0	Rev. No.			

Approved as complying with the Florida Building Code
Date SEP 17, 2015
NOA# 15-0420.12
Miami Dade Product Control
By Ishaq I. Chanda

ANTHONY LYNN MILLER
LICENSE
No. 58705
STATE OF FLORIDA
PROFESSIONAL ENGINEER
9/11/15
A. LYNN MILLER, P.E.
P.E.# 58705