MIAMI-DADE COUNTY
PRODUCT CONTROL SECTION
11805 SW 26 Street, Room 208
Miami, Florida 33175-2474
T (786) 315-2590 F (786) 315-2599
www.miamidade.gov/economy

DEPARTMENT OF REGULATORY AND ECONOMIC RESOURCES (RER)
BOARD AND CODE ADMINISTRATION DIVISION

# NOTICE OF ACCEPTANCE (NOA)

**Quality Engineered Products Co., Inc.**
**4506 Quality Lane**
**Tampa, FL 33634**

## SCOPE:

This NOA is being issued under the applicable rules and regulations governing the use of construction materials. The documentation submitted has been reviewed and accepted by Miami-Dade County RER -Product Control Section to be used in Miami Dade County and other areas where allowed by the Authority Having Jurisdiction (AHJ).
This NOA shall not be valid after the expiration date stated below. The Miami-Dade County Product Control Section (In Miami Dade County) and/or the AHJ (in areas other than Miami Dade County) reserve the right to have this product or material tested for quality assurance purposes. If this product or material fails to perform in the accepted manner, the manufacturer will incur the expense of such testing and the AHJ may immediately revoke, modify, or suspend the use of such product or material within their jurisdiction. RER reserves the right to revoke this acceptance, if it is determined by Miami-Dade County Product Control Section that this product or material fails to meet the requirements of the applicable building code.

This product is approved as described herein, and has been designed to comply with the Florida Building Code, including the High Velocity Hurricane Zone.

**DESCRIPTION: Series 16 ga Outswing Double Flush Steel Doors-Impact**

**APPROVAL DOCUMENT:** Drawing titled "8'-0" X 8'0" Double/Single Flush Door (outswing)", sheets 1 through 9 of 9, dated 11/23/2015, prepared by manufacturer, signed and sealed by Cody C. Davis, P. E. , bearing the Miami-Dade County Product Control Revision stamp with the Notice of Acceptance number and expiration date by the Miami-Dade County Product Control Section.

**MISSILE IMPACT RATING: Large and Small Missile Impact Resistant**

**Limitations:**

1. The alternate Stainless Steel Doors shall be min 16 ga (.063" thk. Min.) w/ Tensile yield strength of min. 50.5 ksi and ultimate strength=98.5 ksi.
2. Doors w/ Pemko 2001AV threshold (item 5A) are not rated for water infiltration.

**LABELING:** Each unit shall bear a permanent label with the manufacturer's name or logo, city, state and series and following statement: "Miami-Dade County Product Control Approved", noted herein.

**RENEWAL** of this NOA shall be considered after a renewal application has been filed and there has been no change in the applicable building code negatively affecting the performance of this product.

**TERMINATION** of this NOA will occur after the expiration date or if there has been a revision or change in the materials, use, and/or manufacture of the product or process. Misuse of this NOA as an endorsement of any product, for sales, advertising or any other purposes shall automatically terminate this NOA. Failure to comply with any section of this NOA shall be cause for termination and removal of NOA.

**ADVERTISEMENT:** The NOA number preceded by the words Miami-Dade County, Florida, and followed by the expiration date may be displayed in advertising literature. If any portion of the NOA is displayed, then it shall be done in its entirety.

**INSPECTION:** A copy of this entire NOA shall be provided to the user by the manufacturer or its distributors and shall be available for inspection at the job site at the request of the Building Official.

This NOA **revises & renews NOA # 12-1115.13** and consists of this page 1 and evidence pages E-1, as well as approval document mentioned above.

The submitted documentation was reviewed by **Ishaq I. Chanda, P.E.**

MIAMI-DADE COUNTY APPROVED

11/25/15

**NOA No. 15-0422.02**
**Expiration Date: October 13, 2020**
**Approval Date: November 25, 2015**

**Quality Engineered Products Co, Inc.**

## NOTICE OF ACCEPTANCE: EVIDENCE SUBMITTED

**A. DRAWINGS**

1. Manufacturer's die drawings and sections (Submitted under files below)
2. Drawing titled "8'-0" X 8'0" Double/Single Flush Door (outswing)", sheets 1 through 9 of 9, dated 11/23/2015, prepared by manufacturer, signed and sealed by Cody C. Davis, P. E.

**B. TESTS** (Submitted under file #**12-1115.13 /# 10-0629.03**)

1. Test reports on 1) Air Infiltration Test, per FBC TAS 202-94
   2) Uniform Static Air Pressure Test, Loading per FBC, TAS 202.
   3) Water Resistance Test per FBC, TAS 202-94 (See threshold type).
   4) Large Missile Impact Test per FBC, TAS 201-94
   5) Cyclic Wind Pressure Loading per FBC, TAS 203-94
   6) Forced Entry Test, per FBC and TAS 202-94

Along with marked-up drawings and installation diagram of double Outswing Flush Steel Doors, prepared by Certified Testing Lab Inc., Test Report No. **CTLA-1998W,** dated 04/07/10, signed and sealed by Ramesh Patel, P.E.

**C. CALCULATIONS**

1. Anchor verification calculations complying w/ FBC 2014(5th Edition), dated 10/21/2015 and last revised on 11/20/2015, prepared, signed and sealed by Cody C. Davis, P.E.

**D. QUALITY ASSURANCE**

1. Miami Dade Department of Regulatory and Economic Resources (RER)

**E. MATERIAL CERTIFICATIONS** (Except item #1, submitted under files#**12-1115.13 /# 10-0629.03**)

1. Technical Strength data sheet of ATI 304 Stainless Steel issued by ATI Allegheny Ludlum.
2. Tensile test report prepared by prepared by Certified Testing Lab Inc., Test Report No. **CTLA-1998W,** tested per ASTM E8/A370, dated 08/19/10 signed and sealed by Ramesh Patel, P. E.
3. Notice of Acceptance No. **06-0823.09** issued to Dow Corning for "Fold Form Insulation", expiring on 05/31/2012.
4. Underwriter test report file # R3576 (Proj #09NK13240) dated Nov 16, 2009 for Surface Burning Characteristics for Fiberglass Batts & Blanket per ANSI/UL-723 & ASTME-84, issued to Ownes Corning, Toledo, OH.

**F. STATEMENTS**

1. Statement letter of conformance to FBC 2014(5th Edition) and "no financial interest", dated 09/30/15, signed and sealed by Cody C. Davis, P. E.
2. Statement letter of compliance, as a part of the above referenced test reports.

**G. OTHER**

1. This **revises & renews NOA # 12-1115.13**, expiring October 13, 2020.

Ishaq I. Chanda

**Ishaq I. Chanda, P.E.**
**Product Control Examiner**
**NOA No. 15-0422.02**
**Expiration Date: October 13, 2020**
**Approval Date: November 25, 2015**

# QUALITY ENGINEERED PRODUCTS

## 8'-0" x 8'-0" DOUBLE/SINGLE FLUSH DOOR (OUTSWING)

INSTALLATION NOTES:

1. ONE (1) ANCHOR IS REQUIRED AT EACH ANCHOR LOCATION SHOWN.
2. THE NUMBER OF ANCHORS DEPICTED IS THE MINIMUM NUMBER OF ANCHORS TO BE USED FOR PRODUCT INSTALLATION.
3. SHIM AS REQUIRED AT EACH ANCHOR WITH LOAD BEARING SHIM(S). MAXIMUM ALLOWABLE SHIM STACK TO BE 1/4 INCH. SHIM WHERE SPACE OF 1/16 INCH OR GREATER OCCURS. SHIM(S) SHALL BE CONSTRUCTED OF HIGH DENSITY PLASTIC OR BETTER.
4. FOR INSTALLATION INTO WOOD FRAMING USE 1/2 INCH DIAMETER WOOD LAG SCREWS OF SUFFICIENT LENGTH TO ACHIEVE 2 1/2 INCH MINIMUM EMBEDMENT INTO WOOD SUBSTRATE. WOOD LAG SCREWS TO BE USED IN 3/4 INCH EMT PIPE SLEEVE. MIN EDGE DIST. = 3 IN. (SEE SHEETS 6 & 7)
5. FOR INSTALLATION THROUGH 1x BUCK TO CONCRETE/MASONRY, OR DIRECTLY INTO CONCRETE/MASONRY, USE 3/8 INCH DIAMETER DYNABOLT SLEEVE ANCHOR BY ITW/REDHEAD OF SUFFICIENT LENGTH TO ACHIEVE 1 7/8 INCH MINIMUM EMBEDMENT. MIN EDGE DIST. = 3 IN. (SEE SHEETS 6 & 7)
6. FOR INSTALLATION INTO STRUCTURAL STEEL, USE ⅜" DIA. SCREW THRU EMP PIPE SLEEVE CONFORMING TO SAE GRADE 2 OR EQUAL. MINIMUM MATERIAL THICKNESS = ⅜" THICK CONFORMING TO A36 STEEL. (SEE SHEET 6 & 7)
7. MINIMUM EMBEDMENT AND EDGE DISTANCE EXCLUDE WALL FINISHES, INCLUDING BUT NOT LIMITED TO STUCCO, FOAM, BRICK VENEER, AND SIDING.
8. INSTALLATION ANCHORS AND ASSOCIATED HARDWARE MUST BE MADE OF CORROSION RESISTANT MATERIAL OR HAVE A CORROSION RESISTANT COATING.
9. FOR GROUT FILLED BLOCK, DO NOT INSTALL INSTALLATION ANCHORS INTO MORTAR JOINTS. EDGE DISTANCE IS MEASURED FROM FREE EDGE OF BLOCK OR EDGE OF MORTAR JOINT INTO FACE SHELL OF BLOCK.
10. INSTALLATION ANCHORS SHALL BE INSTALLED IN ACCORDANCE WITH ANCHOR MANUFACTURER'S INSTALLATION INSTRUCTIONS. ANCHORS SHALL NOT BE USED IN SUBSTRATES WITH STRENGTHS LESS THAN THE MINIMUM STRENGTH SPECIFIED BY THE ANCHOR MANUFACTURER.
11. INSTALLATION ANCHOR CAPACITIES FOR PRODUCTS HEREIN ARE BASED ON SUBSTRATE MATERIALS WITH THE FOLLOWING PROPERTIES:
    A. WOOD - MINIMUM SPECIFIC GRAVITY OF 0.55.
    B. CONCRETE - MINIMUM COMPRESSIVE STRENGTH OF 3000 PSI.
    C. MASONRY - STRENGTH CONFORMANCE TO ASTM C-90, GRADE N, TYPE 1 (OR GREATER).
    D. STRUCTURAL STEEL - MEMBER TO COMPLY WITH AISC 360. ADEQUACY OF METAL STRUCTURE TO BE REVIEWED BY BUILDING OFFICIAL

| DESIGN PRESSURE RATING | | |
|---|---|---|
| | WHERE WATER FILTRATION REQUIREMENT IS NEEDED (HAGER 434V THRESHOLD) | WHERE WATER FILTRATION REQUIREMENT IS NOT NEEDED (PEMKO 2005AV THRESHOLD) |
| POSITIVE | +80.0 PSF | +80.0 PSF |
| NEGATIVE | -80.0 PSF | -80.0 PSF |

GENERAL NOTES:

1. THE PRODUCT SHOWN HEREIN IS DESIGNED AND MANUFACTURED TO COMPLY WITH THE (FIFTH EDITION) 2014 FLORIDA BUILDING CODE (FBC), INCLUDING HVHZ AND HAS BEEN EVALUATED ACCORDING TO THE FOLLOWING:
   - TAS 201-94/TAS 202-94 (STRUCTURAL ONLY)/TAS 203-94
2. ADEQUACY OF THE EXISTING STRUCTURAL CONCRETE/MASONRY/METAL STUD AND 2X FRAMING AS A MAIN WIND FORCE RESISTING SYSTEM CAPABLE OF WITHSTANDING AND TRANSFERRING APPLIED PRODUCT LOADS TO THE FOUNDATION IS THE RESPONSIBILITY OF THE ENGINEER OR ARCHITECT OF RECORD FOR THE PROJECT.
3. (2) 2X BUCKS (WHEN USED) SHALL BE DESIGNED AND ANCHORED TO PROPERLY TRANSFER ALL LOADS TO THE STRUCTURE. BUCK DESIGN AND INSTALLATION IS THE RESPONSIBILITY OF THE ENGINEER OR ARCHITECT OF RECORD FOR THE PROJECT.
4. THE INSTALLATION DETAILS DESCRIBED HEREIN ARE GENERIC AND MAY NOT REFLECT ACTUAL CONDITIONS FOR A SPECIFIC SITE. IF SITE CONDITIONS CAUSE INSTALLATION TO DEVIATE FROM THE REQUIREMENTS DETAILED HEREIN, A LICENSED ENGINEER OR ARCHITECT SHALL PREPARE SITE SPECIFIC DOCUMENTS FOR USE WITH THIS DOCUMENT. ARCHITECT SHALL PREPARE SITE SPECIFIC DOCUMENTS FOR USE WITH THIS DOCUMENT FOR NON-HVHZ. ONE TIME APPROVAL IS REQUIRED FROM MIAMI-DADE COUNTY.
5. THIS PRODUCT IS LARGE AND SMALL MISSILE IMPACT RESISTANT APPROVED. IMPACT PROTECTIVE SYSTEM **IS NOT REQUIRED** ON THIS PRODUCT IN AREAS REQUIRING IMPACT RESISTANCE.
6. DOOR & FRAME MATERIAL: 16 GA. OR 14 GA. STEEL. MEETING FyMIN = 46.3 KSI; FuMIN = 52.1 KSI OR STAINLESS STEEL FyMIN = 50.5 KSI; FuMIN = 98.5 KSI. MIL-CERTIFICATE REQUIRED FOR VERIFICATION OF AVAILABLE STRENGTH.

PRODUCT REVISED
to complying with the Florida Building Code
Acceptance No. 15-0422.02
Expiration Date OCT 13, 2020
Miami-Dade Product Control

TABLE OF CONTENTS

| SHEET | REVISION | SHEET DESCRIPTION |
|---|---|---|
| 1 | - | INSTALLATION NOTES, GENERAL NOTES, & BILL OF MATERIALS |
| 2 | - | ELEVATIONS |
| 3 | - | INTERNAL ELEVATIONS & DETAILS |
| 4 | - | VERTICAL SECTIONS |
| 5 | - | HORIZONTAL SECTIONS |
| 6 | - | ANCHOR LOCATIONS |
| 7 | - | ANCHOR LOCATIONS |
| 8 | - | DETAILS |
| 9 | - | DETAILS |

BILL OF MATERIALS

| MARK | QUANTITY | DESCRIPTION |
|---|---|---|
| 1 | 1 | 16 GA. (.063") MIN. (14 GA. MAX.) STEEL HOLLOW METAL FRAME FyMIN. = 46.3 KSI; FuMIN = 52.1 KSI (OR STAINLESS STEEL MEETING FyMIN = 50.5 KSI; FuMIN = 98.5 KSI) |
| 2 | 1 OR 2 | 16 GA. (.063") MIN. (14 GA. MAX.) STEEL HOLLOW METAL DOORS FyMIN. = 46.3 KSI; FuMIN = 52.1 KSI (OR STAINLESS STEEL MEETING FyMIN = 50.5 KSI; FuMIN = 98.5 KSI) |
| 3 | 8 | HAGER HINGES BB1279 4-1/2" x 4-1/2" x .134" THICK |
| 4 | SHEET 6 & 7 | 1/2" DIA. DYNABOLT ITW/REDHEAD SLEEVE ANCHOR (3/8" DIA.BOLT) X 4-1/2" SLEEVE ANCHOR W/ 3/4" DIA. WELDED PIPE SLEEVE W/ 1-7/8" MIN. EMBEDMENT & 3" MIN. EDGE DISTANCE INTO 3 KSI CONCRETE OR GROUT FILLED BLOCK |
| 4A | SHEET 6 & 7 | 1-3/4" x 5-3/4" x 12" T-ANCHORS (SEE SHEET 7) |
| 4B | SHEET 6 & 7 | 1/2" x 5-1/2" WOOD LAG SCREWS (2-1/2" MIN. EMBEDMENT) W/ 3/4" EMT PIPE SLEEVE |
| 4C | SHEET 6 & 7 | 0.187" DIA. WIRE ANCHOR |
| 4D | SHEET 6 & 7 | 3/8" DIA. SCREW THRU EMP PIPE SLEEVE CONFORMING TO SAE GRADE 2 OR EQUAL |
| 5 | 1 | HAGER 434V THRESHOLD W/ 1/4" x 2" ITW/REDHEAD TAPCONS (Fu = 125 KSI, Fy = 100 KSI) @ 12" O/C W/ 1-3/4" MIN. EMBEDMENT INTO CONC. (SEE ELEV. PER SHEET 6) |
| 5A | 1 | 2005 AV THRESHOLD W/ 1/4" x 2" ITW/REDHEAD TAPCONS (Fu = 125 KSI, Fy = 100 KSI) @ 12" O/C W/ 1-3/4" MIN. EMBEDMENT INTO CONC. (NOT RATED FOR WATER INFILTRATION) |
| 6 | AS REQ. | NATIONAL GUARD WEATHERSTRIP 160VA W/ #6 x 5/8" SCREWS @ 6" O/C |
| 7 | 1 | PEMKO 347A TOP DRIP W/ #6 x 5/8" SCREWS @ 6" O/C (ONLY REQUIRED IF WATER RESISTANCE IS NEEDED) |
| 8 | 1 | PEMKO 68A TOP WEATHERSTRIP W/ #6 x 5/8" SCREWS @ 6" O/C (ONLY REQUIRED IF WATER RESISTANCE IS NEEDED) |
| 9 | 2 | PEMKO 375CR ASTRAGAL (EXTERIOR ONLY IF WATER RESISTANCE IS NEEDED) |
| 10 | 8 | 7 GA. STEEL FRAME HINGE REINFORCEMENT (1-1/4" x 10") |
| 11 | 8 | 7 GA. STEEL DOOR HINGE REINFORCEMENT (1-1/4" x 10") |
| 12 | 2 OR 4 | 16 GA. TOP & BOTTOM CHANNEL, SPOT WELD 4" O/C |
| 13 | AS REQ. | 20 GA. STEEL HAT STIFFENER, SPOT WELD 5" O/C |
| 14 | AS REQ. | OWENS CORNING FIBERGLASS INSULATION |
| 16 | 2 | 12 GA. STEEL 1-1/2" x 4-1/2" FULL HEIGHT LOCK REINFORCEMENT |
| 17 | 2 | ROCKWOOD 585 SURFACE BOLTS (DOUBLE DOOR INACTIVE PANEL ONLY) |
| 18 | 2 | 18 GA. STEEL TOP CAP, TACK WELD & CAULK (3/4" x 1-1/2") |
| 19 | AS REQ. | 16 GA. (0.63") MIN. HINGE CHANNEL REINFORCEMENT 3/8" x 5/8" x 1-1/4" |
| 20 | 1 | MARKS 195 SERIES W/ DEADBOLT OR BEST 93K W/ 83T DEADBOLT (CYLINDRICAL) |
| 21 | 1 | BEST 45H SERIES OR MARKS 5 SERIES MORTISE LOCKSET |
| 22 | 1 | 1-1/4" x .375" CELL FOAM (WHERE WATER RESISTANCE IS NEEDED) |

NOTE: ITEM 15 NOT USED


Quality Engineered Products Co., Inc.
4506 QUALITY LN.
TAMPA, FL. 33634
PH: (813) 885-1693 FX: (813) 884-2673


TITLE: 8'-0" x 8'-0" DOUBLE/ SINGLE FLUSH DOOR
INSTALLATION & GENERAL NOTES, & BILL OF MATERIALS

REVISIONS

| NO. | DESCRIPTION | BY | DATE |
|---|---|---|---|
| | REVISION | CD | 11.23.15 |

CODY DAVIS LICENSE No. 75154 STATE OF FLORIDA PROFESSIONAL ENGINEER
11/23/15
CODY DAVIS P.E. FLORIDA LIC. # 75154

DATE: 11.23.15
DWN BY: KRM
CHK BY: CCD
SCALE: NTS

SHEET: 1 OF 9


P:\1000 Projects\1122 Global Engineering\1122.002 Doors NOA\Engineering\Brasa 2 NOA 12-1115.13\DWG\CAVANTI DEP NOA 10-0629.03.dwg, 11/23/2015 2:08:41 PM, lamacf

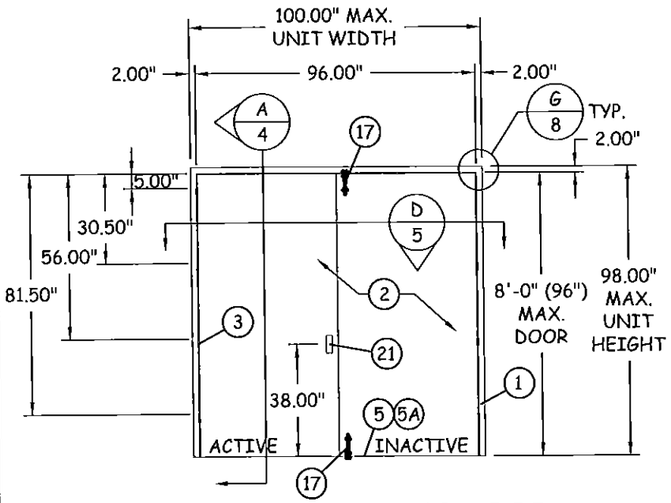


**DOUBLE OUTSWING DOOR**
**(INTERIOR VIEW)**

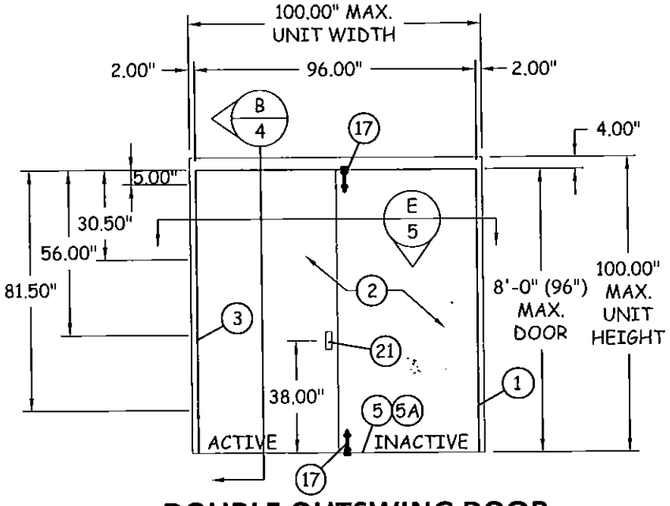


**DOUBLE OUTSWING DOOR**
**(INTERIOR VIEW)**

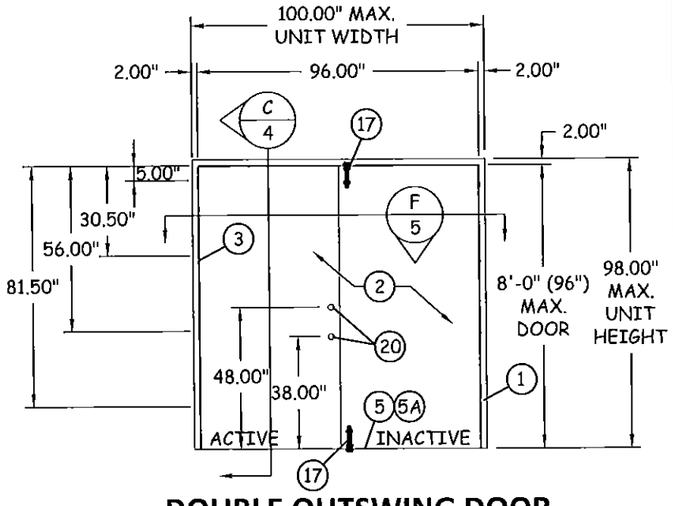


**DOUBLE OUTSWING DOOR**
**(INTERIOR VIEW)**

PRODUCT REVIEWED
as complying with the Florida
Building Code
Acceptance No 15-0422.02
Application Date 10/13/2020
Ishaq I. Chanda
Miami-Dade Product Control

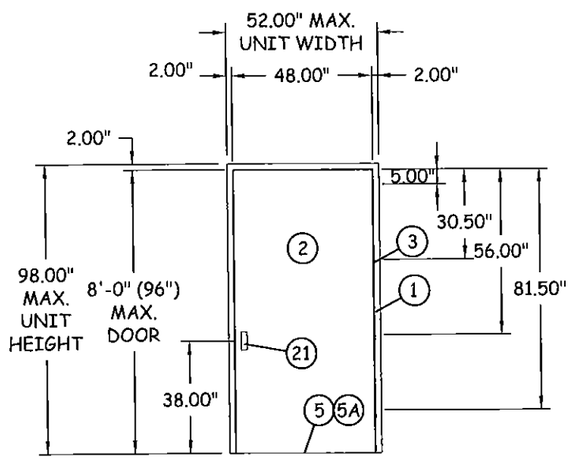


**SINGLE OUTSWING DOOR**
**(INTERIOR VIEW)**

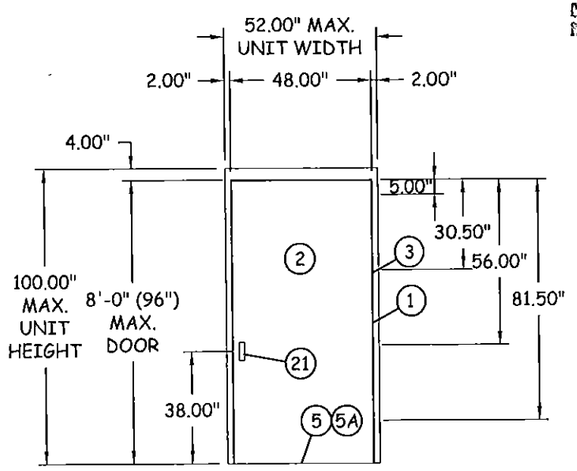


**SINGLE OUTSWING DOOR**
**(INTERIOR VIEW)**

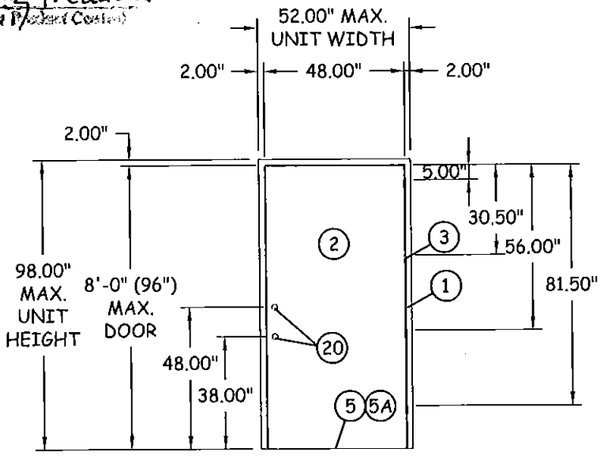


**SINGLE OUTSWING DOOR**
**(INTERIOR VIEW)**


Quality Engineered Products Co., Inc.
4506 QUALITY LN.
TAMPA, FL 33634
PH: (813) 885-1693 FX: (813) 884-2673


TITLE: 8'-0" x 8'-0" DOUBLE/ SINGLE FLUSH DOOR ELEVATIONS

REVISIONS

| NO. | DESCRIPTION | BY | DATE |
|---|---|---|---|
| | | | |

CODY DAVIS LICENSE No. 75154 STATE OF FLORIDA 11/23/15 PROFESSIONAL ENGINEER CODY DAVIS, P.E. FLORIDA PE/C# 75154

DATE: 11.23.15 | DWN BY: KRM | CHK BY: CCD | SCALE: NTS

SHEET: 2 OF 9

P:\1000 Projects\1122 Global Engineering\1122-002 Doors NOA\Engineering\Phase 2 NOA 12.1115 13\WG\AVANTI OEP NOA 10-0629.03.dwg, 11/23/2015 2:10:28 PM, lamesf

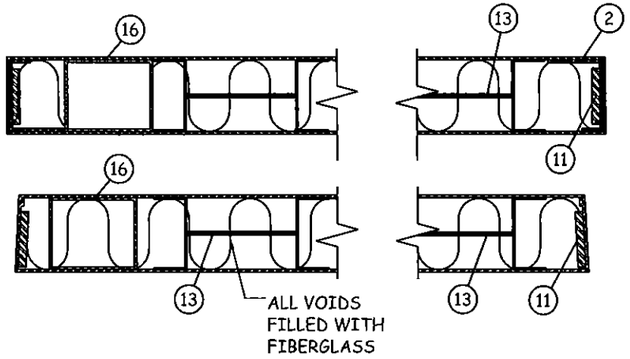


## H/3 SEAMLESS EDGE DOOR

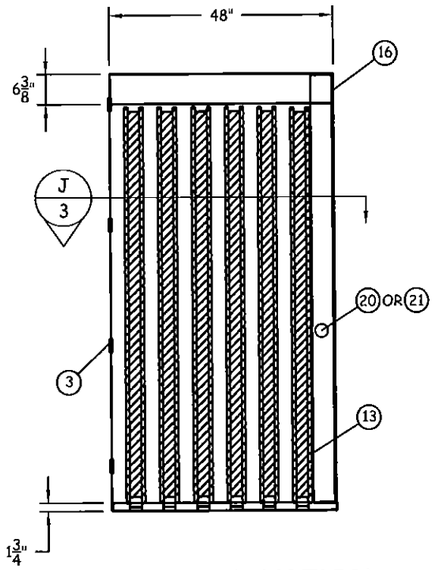


## INTERNAL ELEVATION

HAT CHANNEL REINFORCED

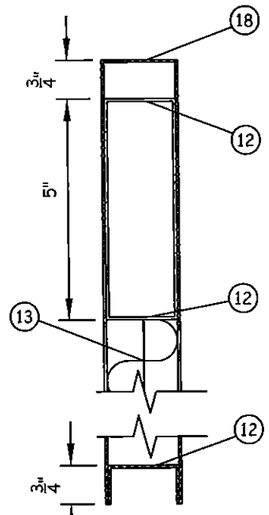


## K/3 VERTICAL DOOR SECTION

# DOOR PANEL ILLUSTRATION

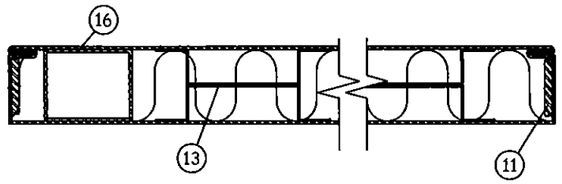


## I/3 EDGE SEAM DOOR

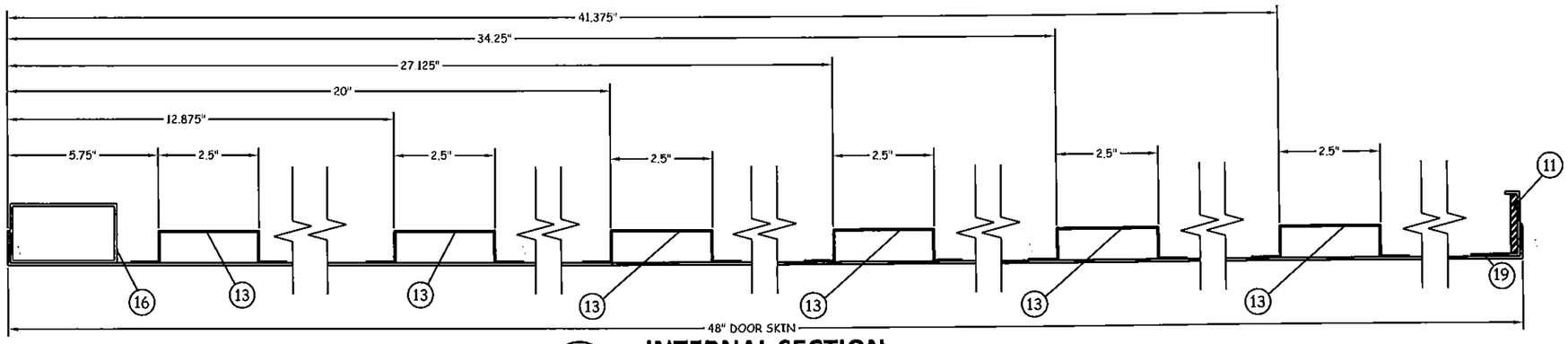


## J/3 INTERNAL SECTION

REINFORCEMENT SPACING

PRODUCT REVISED
to complying with the Florida
Building Code
Acceptance No. 15-0422.02
Expiration Date 10/13/20
By Shaq L. Chandler
Miami-Dade Product Control

Quality Engineered Products Co., Inc.
4506 QUALITY LN.
TAMPA, FL. 33634
PH: (813) 885-1693 FX: (813) 884-2673

TITLE: 8'-0" x 8'-0" DOUBLE/ SINGLE FLUSH DOOR
INTERNAL ELEVATIONS & DETAILS

REVISIONS

| NO. | DESCRIPTION | BY | DATE |
|---|---|---|---|
| | | | |

CODY DAVIS LICENSE No. 75154 STATE OF FLORIDA PROFESSIONAL ENGINEER
CODY DAVIS, P.E.
FLORIDA LIC. # 75154

DATE: 11.23.15
DWN BY: KRM
CHK BY: CCD
SCALE: NTS

SHEET: 3 OF 9

P:\1000 Projects\1122 Global Engineering\1122.002 Doors NOA\Engineering\Phase 2 NOA 12.1115.13\DWG\AVANTI OEP NOA 10.0629.03.dwg, 11/23/2015 2:11:10 PM, lanoef

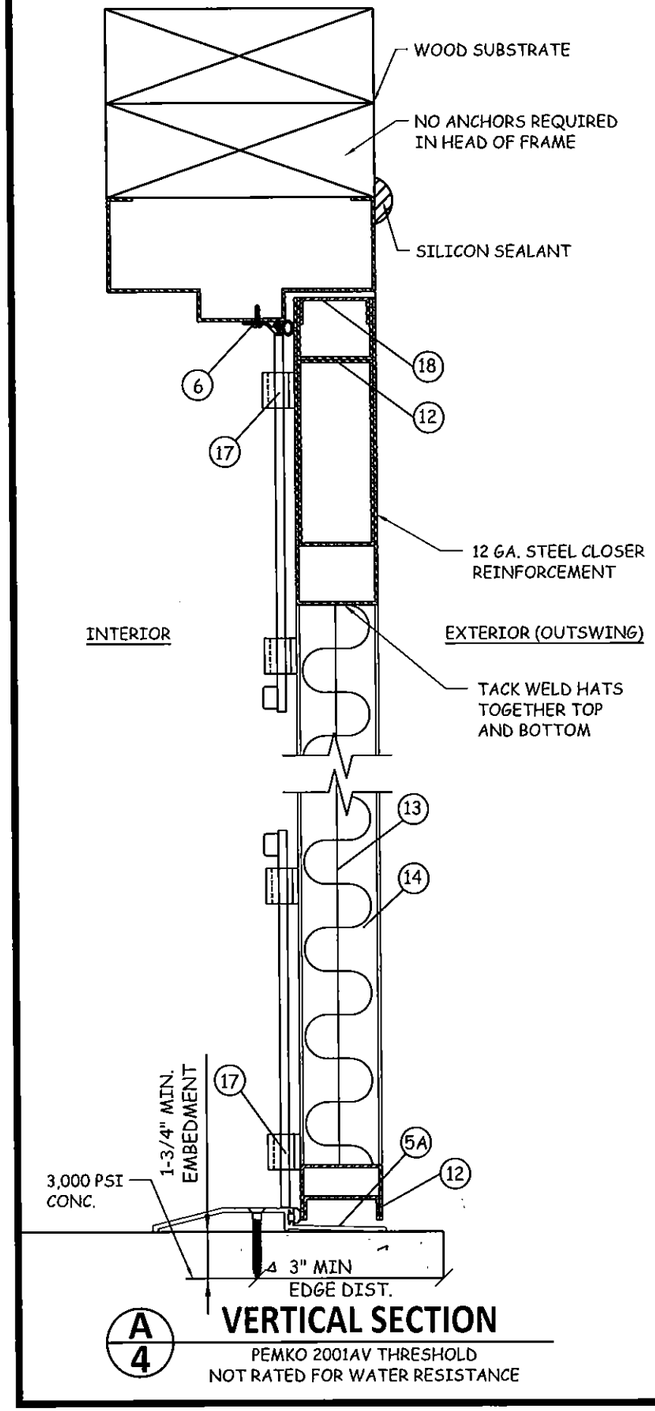


A/4 **VERTICAL SECTION**

PEMKO 2001AV THRESHOLD
NOT RATED FOR WATER RESISTANCE

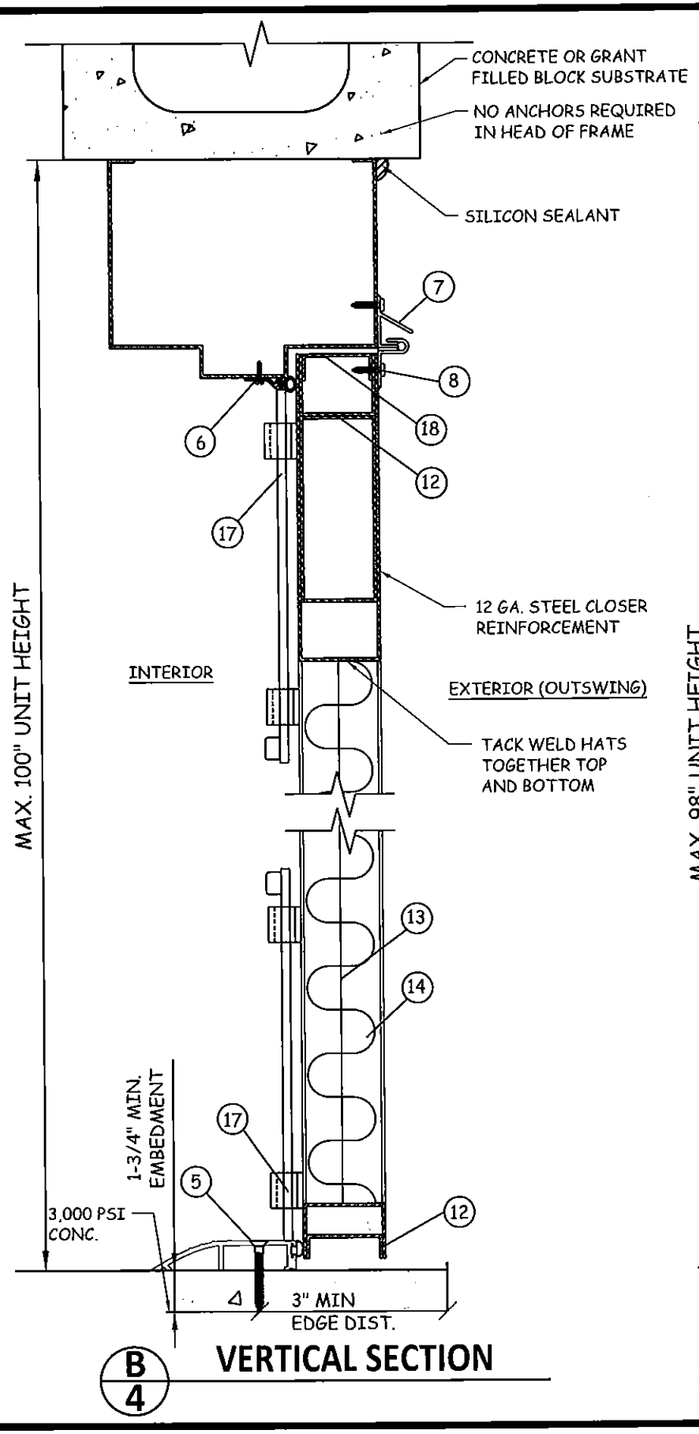


B/4 **VERTICAL SECTION**

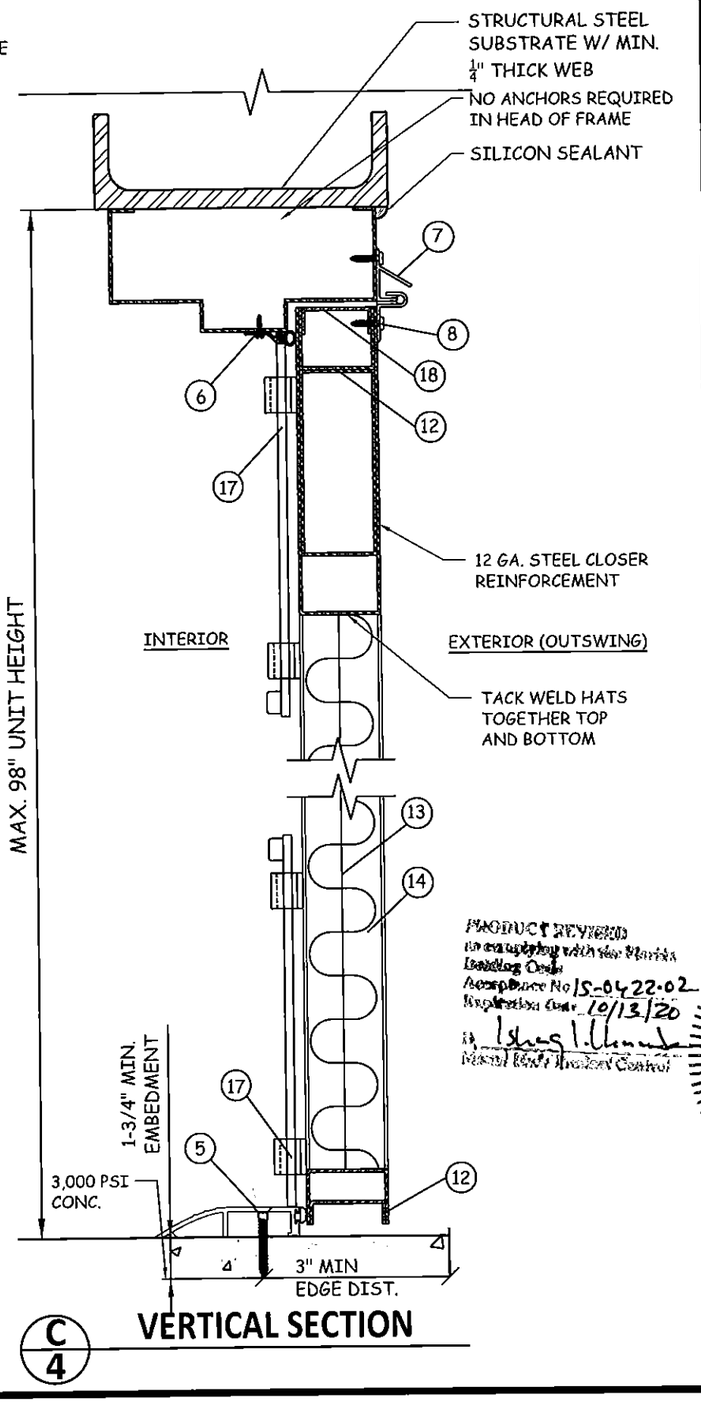


C/4 **VERTICAL SECTION**

PRODUCT REVIEWED
in compliance with the Florida Building Code
Acceptance No: IS-0422.02
Expiration Date: 10/13/20

Quality Engineered Products Co., Inc.

4506 QUALITY LN.
TAMPA, FL. 33634
PH: (813) 885-1693 FX: (813) 884-2673

TITLE: 8'-0" x 8'-0" DOUBLE/ SINGLE FLUSH DOOR VERTICAL SECTIONS

REVISIONS

| NO. | DESCRIPTION | BY | DATE |
|---|---|---|---|
| 1 | REVISION | CD | 11.23.15 |

CODY DAVIS LICENSE No. 75154 STATE OF FLORIDA PROFESSIONAL ENGINEER
CODY DAVIS, P.E. FLORIDA LIC. # 75154

DATE: 11.23.15
DWN BY: KRM
CHK BY: CCD
SCALE: NTS

SHEET: 4 OF 9

P:\1000 Projects\1122 Global Engineering\1122.002 Doors NOA\Engineering\Phase 2 NOA 12.1115.13\DWG\NAVANTI OSP NOA 10-0629.03.dwg, 11/23/2015 2:11:58 PM, jamesf

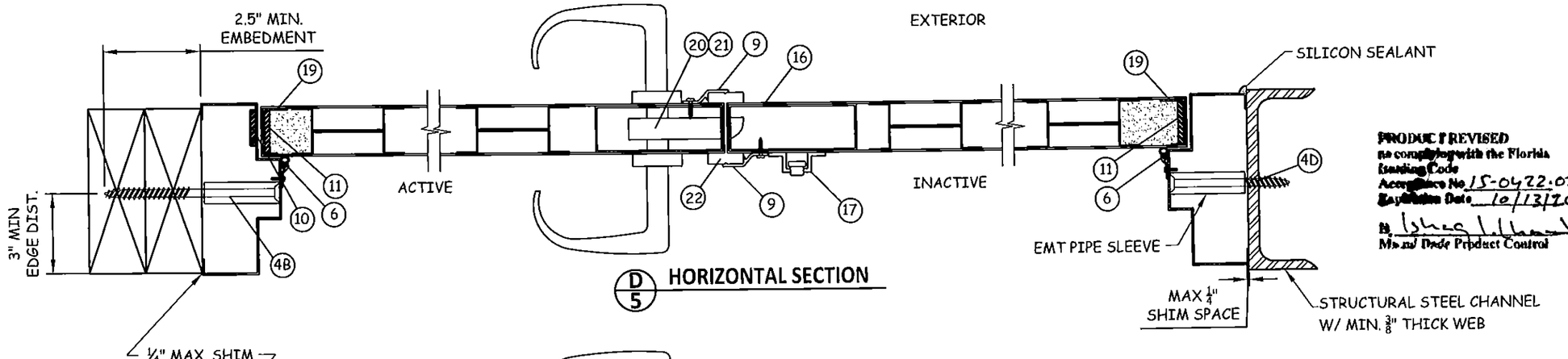


D/5 HORIZONTAL SECTION

E/5 HORIZONTAL SECTION

F/5 HORIZONTAL SECTION

PRODUCT REVISED
to comply with the Florida Building Code
Acceptance No. FS-0422.02
Expiration Date 10/13/20
By: Miami-Dade Product Control


Quality Engineered Products Co., Inc.
4506 QUALITY LN.
TAMPA, FL. 33634
PH: (813) 885-1693 FX: (813) 884-2673


TITLE: 8'-0" x 8'-0" DOUBLE/ SINGLE FLUSH DOOR
HORIZONTAL SECTIONS

REVISIONS

| NO. | DESCRIPTION | BY | DATE |
|---|---|---|---|
| | | | |

CODY DAVIS LICENSE No. 75154 STATE OF FLORIDA 11/23/15 PROFESSIONAL ENGINEER
CODY DAVIS, P.E. FLORIDA LIC. # 75154

DATE: 11.23.15
DWN BY: KRM
CHK BY: CCD
SCALE: NTS

SHEET: 5 OF 9

P:\1000 Projects\1122 Global Engineering\1122-002 Doors NOA\Engineering\Phase 2 NOA 12-1115.13\DWG\AVANTI DEP NOA 10-0629.03.dwg, 11/23/2015 2:12:49 PM, Jamest

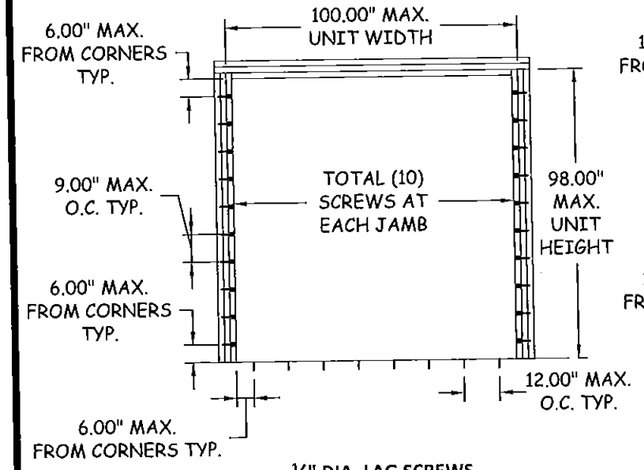


½" DIA. LAG SCREWS

## ANCHOR LOCATION

INSTALLATION INTO WOOD STRUCTURE

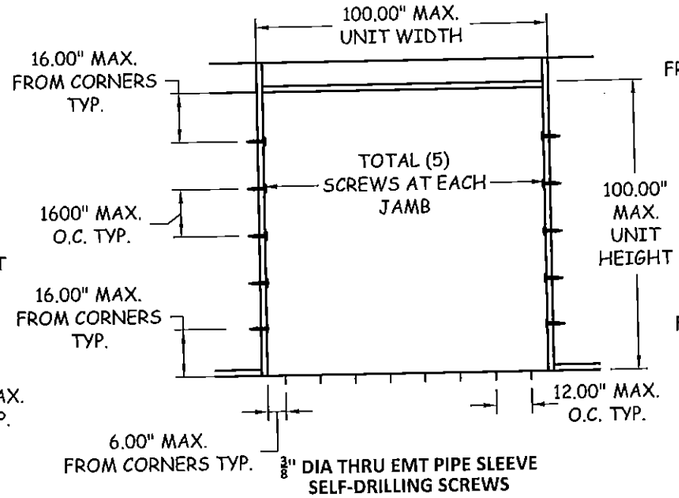


⅜" DIA THRU EMT PIPE SLEEVE SELF-DRILLING SCREWS

## ANCHOR LOCATION

INSTALLATION INTO STRUCTURAL STEEL

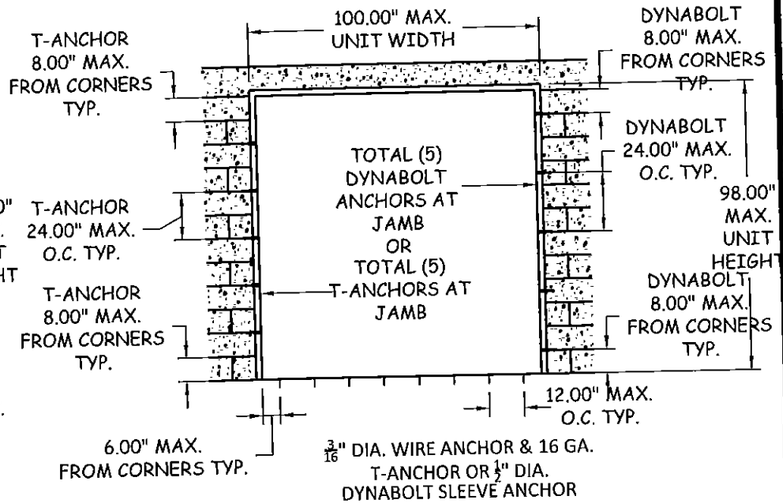


3/16" DIA. WIRE ANCHOR & 16 GA. T-ANCHOR OR ½" DIA. DYNABOLT SLEEVE ANCHOR

## ANCHOR LOCATION

INSTALLATION INTO EXIST. MASONRY (GROUT FILLED BLOCKS)

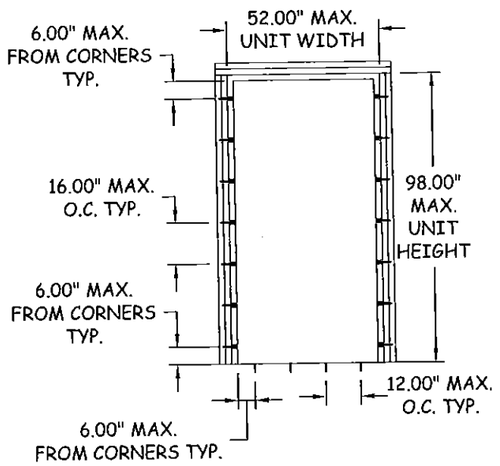


½" DIA. LAG SCREWS

## ANCHOR LOCATION

INSTALLATION INTO WOOD STRUCTURE

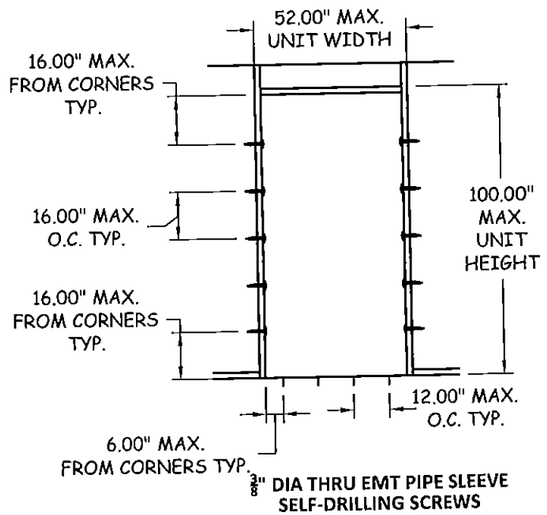


⅜" DIA THRU EMT PIPE SLEEVE SELF-DRILLING SCREWS

## ANCHOR LOCATION

INSTALLATION INTO STRUCTURAL STEEL

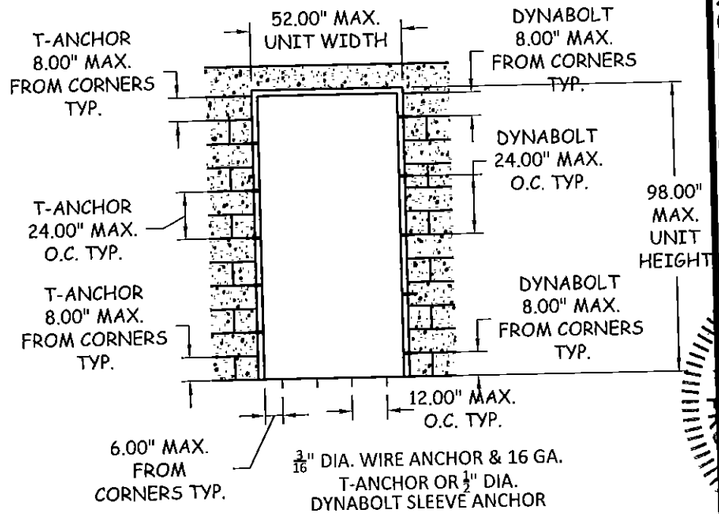


3/16" DIA. WIRE ANCHOR & 16 GA. T-ANCHOR OR ½" DIA. DYNABOLT SLEEVE ANCHOR

## ANCHOR LOCATION

INSTALLATION INTO EXIST. MASONRY (GROUT FILLED BLOCKS)

PRODUCT REVISED
as complying with the Florida Building Code
Acceptance No 15-0422.02
Expiration Date 10/13/20
By [signature]
Miami Dade Product Control


Quality Engineered Products Co., Inc.
4506 QUALITY LN.
TAMPA, FL. 33634
PH: (813) 885-1693 FX: (813) 884-2673


TITLE: 8'-0" x 8'-0" DOUBLE/ SINGLE FLUSH DOOR

ANCHOR LOCATIONS

REVISIONS

| NO. | DESCRIPTION | BY | DATE |
|---|---|---|---|
| | | | |

CODY DAVIS LICENSE No. 75154 STATE OF FLORIDA 11/23/15 PROFESSIONAL ENGINEER

CODY DAVIS, P.E. FLORIDA LIC. # 75154

DATE: 11.23.15 | DWN BY: KRM | CHK BY: CCD | SCALE: NTS

SHEET: 6 OF 9

P:\1000 Projects\1122 Global Engineering\1122-002 Doors NOA\Engineering\Phase 2 NOA 12-1115.13\DWG\AVANTI QEP NOA 10-0629.03.dwg, 11/23/2015 5:07:05 PM, Jamesf

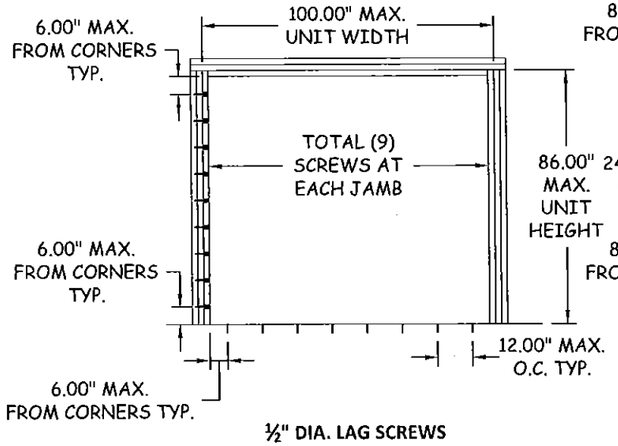


½" DIA. LAG SCREWS

## ANCHOR LOCATION

INSTALLATION INTO WOOD STRUCTURE

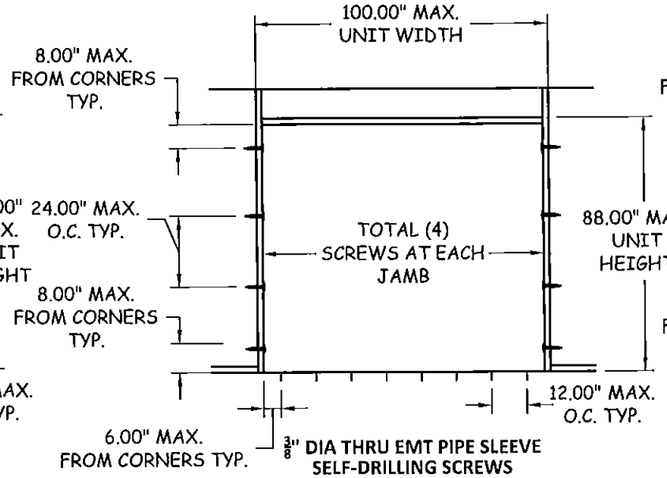


⅜" DIA THRU EMT PIPE SLEEVE SELF-DRILLING SCREWS

## ANCHOR LOCATION

INSTALLATION INTO STRUCTURAL STEEL

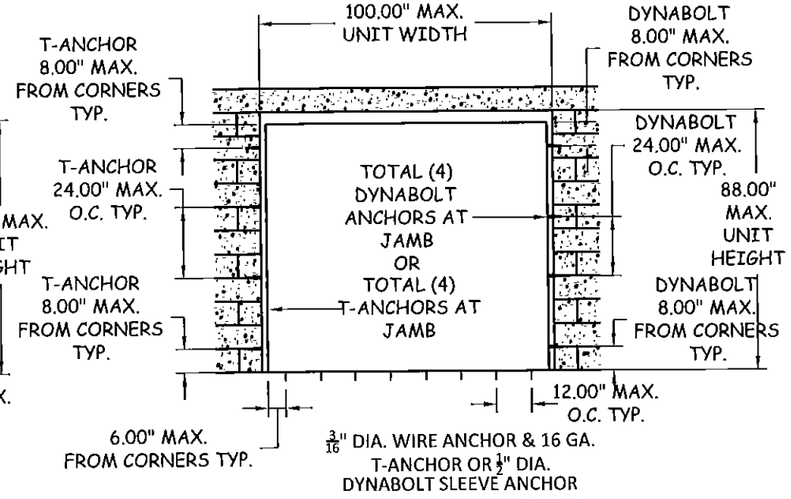


3/16" DIA. WIRE ANCHOR & 16 GA. T-ANCHOR OR ½" DIA. DYNABOLT SLEEVE ANCHOR

## ANCHOR LOCATION

INSTALLATION INTO EXIST. MASONRY (GROUT FILLED BLOCKS)

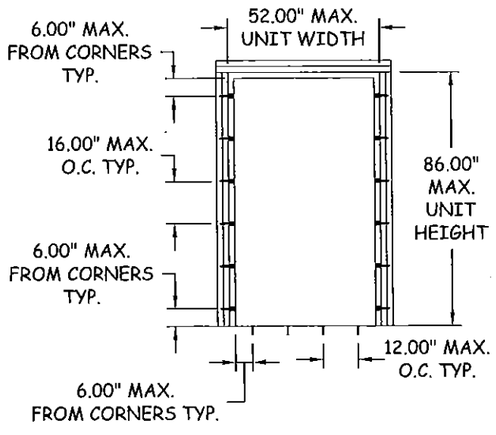


½" DIA. LAG SCREWS

## ANCHOR LOCATION

INSTALLATION INTO WOOD STRUCTURE

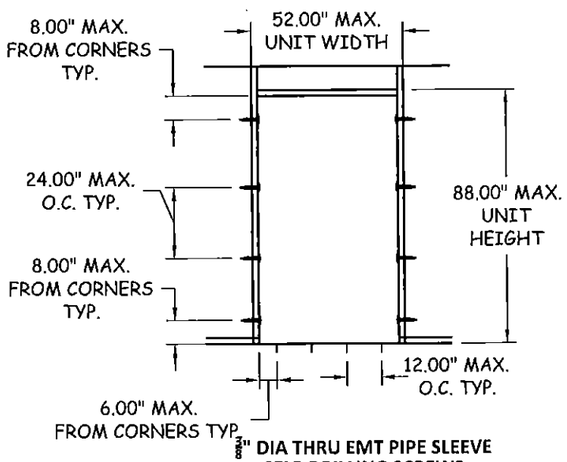


⅜" DIA THRU EMT PIPE SLEEVE SELF-DRILLING SCREWS

## ANCHOR LOCATION

INSTALLATION INTO STRUCTURAL STEEL

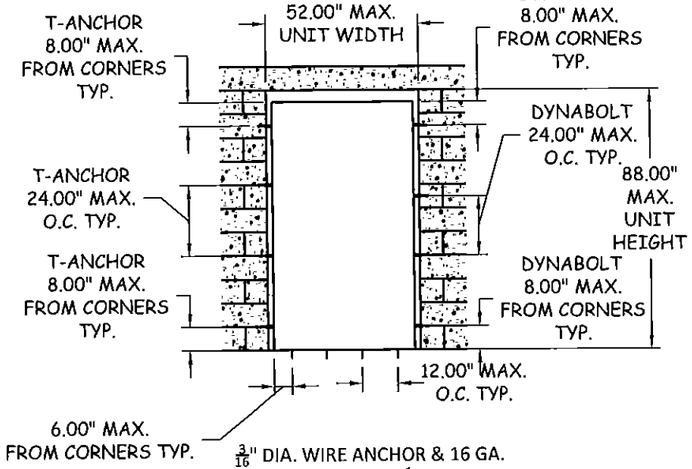


3/16" DIA. WIRE ANCHOR & 16 GA. T-ANCHOR OR ½" DIA. DYNABOLT SLEEVE ANCHOR

## ANCHOR LOCATION

INSTALLATION INTO EXIST. MASONRY (GROUT FILLED BLOCKS)

PRODUCT REVISED
as complying with the Florida Building Code
Acceptance No 15-0422.02
Expiration Date 10/13/20
By Ishag I. Chand
Miami Dade Product Control


Quality Engineered Products Co., Inc.
4506 QUALITY LN.
TAMPA, FL. 33634
PH: (813) 885-1693 FX: (813) 884-2673


TITLE: 7'-0" x 8'-0" DOUBLE/ SINGLE FLUSH DOOR

ANCHOR LOCATIONS

REVISIONS

| NO. | DESCRIPTION | BY | DATE |
|---|---|---|---|
| | | | |

CODY DAVIS LICENSE No. 75154 STATE OF FLORIDA 4/23/15 PROFESSIONAL ENGINEER

CODY DAVIS, P.E. FLORIDA, LIC. # 75154

DATE: 11.23.15 | DWN BY: KRM | CHK BY: CCD | SCALE: NTS

SHEET: 7 OF 9

P:\1000 Projects\1122 Global Engineering\1122-002 Doors NOA\Engineering\Phase 2 NOA 12-1115.13\DWG\AVANTI QEP NOA 10-0629.03.dwg, 11/23/2015 5:07:29 PM, Jamesf

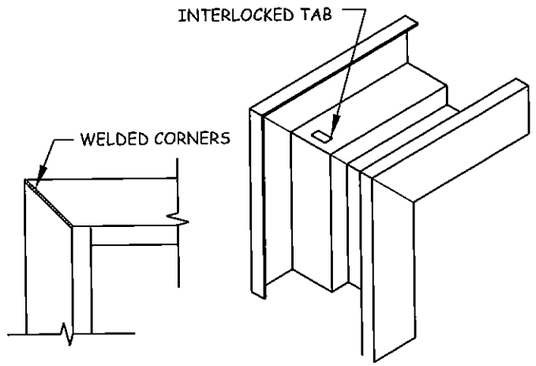


G/8 TYP. CORNER DETAIL

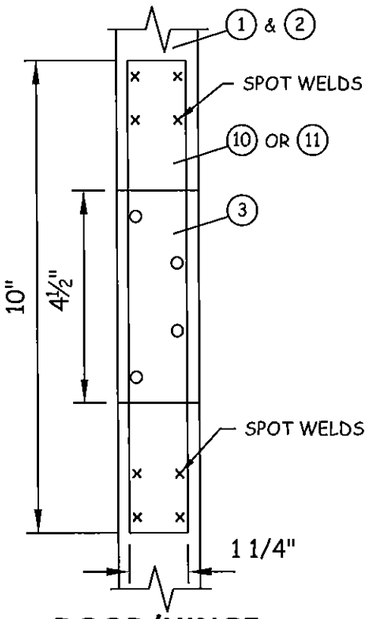


**DOOR/HINGE STEEL HINGE PLATE REINF.**

7 GAUGE X 1-1/4" X 10"

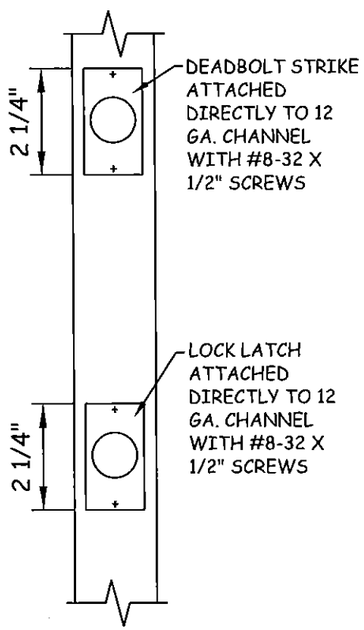


**ACTIVE DOOR**

LOCK/DEAD BOLT REINFORCEMENT

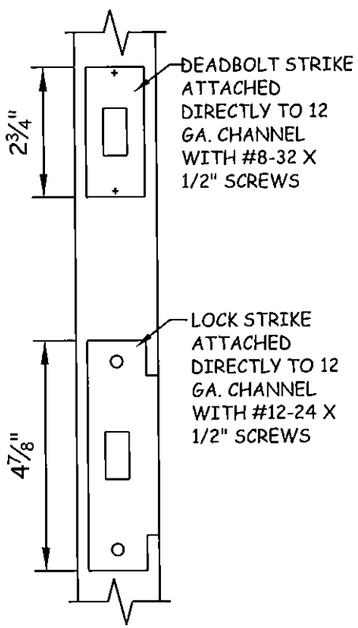


**INACTIVE DOOR**

LOCK/DEAD BOLT STRIKE PLATE REINFORCEMENT

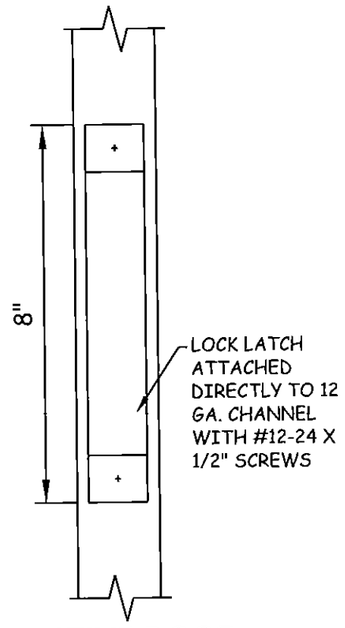


**ACTIVE DOOR**

MORTISE LOCK REINFORCEMENT

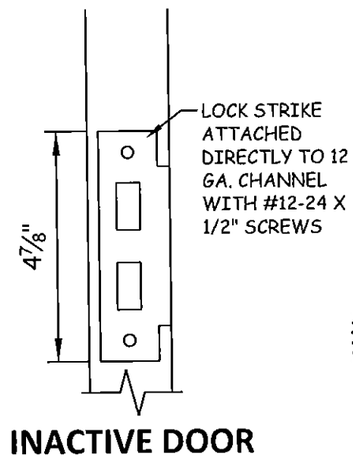


**INACTIVE DOOR**

MORTISE LOCK STRIKE PLATE REINFORCEMENT

PRODUCT REVISED
as complying with the Florida Building Code
Acceptance No. 15-0422.02
Expiration Date 10/12/20
By Ishaq I. Chand
Miami Dade Product Control

Quality Engineered Products Co., Inc.
4506 QUALITY LN.
TAMPA, FL. 33634
PH: (813) 885-1693 FX: (813) 884-2673

TITLE: 8'-0" x 8'-0" DOUBLE/ SINGLE FLUSH DOOR

DETAILS

REVISIONS

| NO. | DESCRIPTION | BY | DATE |
|---|---|---|---|
| | | | |

CODY DAVIS LICENSE No. 75154 STATE OF FLORIDA 11/23/15 PROFESSIONAL ENGINEER
CODY DAVIS, P.E. FLORIDA, LIC. # 75154

| DATE: 11.23.15 | DWN BY: KRM | CHK BY: CCD | SCALE: NTS |
|---|---|---|---|

SHEET: 8 OF 9

P:\1000 Projects\1122 Global Engineering\1122.002 Doors NOA\Engineering\Phase 2 NOA 12-1115.13\DWG\AVANTLOEP NOA 10-0629.03.dwg 11/23/2015 2:16:25 PM lsmesf

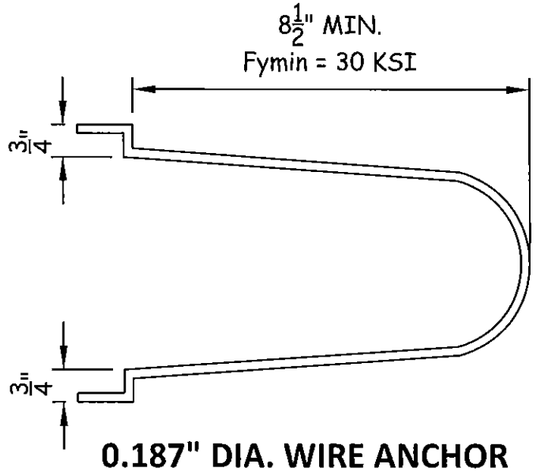


**0.187" DIA. WIRE ANCHOR**

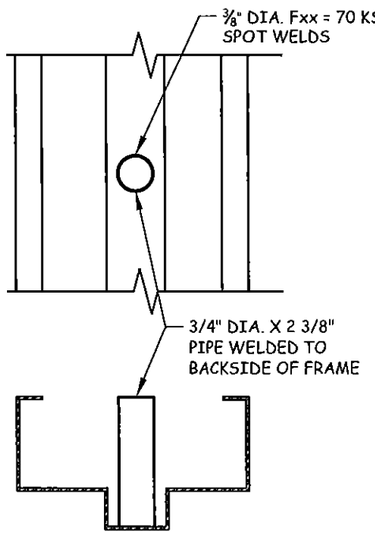


**PIPE SLEEVE DETAIL**

PRODUCT REVISED
to comply with the Florida
Building Code
Acceptance No 15-0422.02
Expiration Date OCT 13, 2020
Miami-Dade Product Control

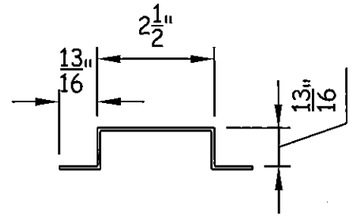


**20 GA. STEEL HAT STIFFEN SPOT WELD 6" O.C. FULL HEIGHT OF DOOR**

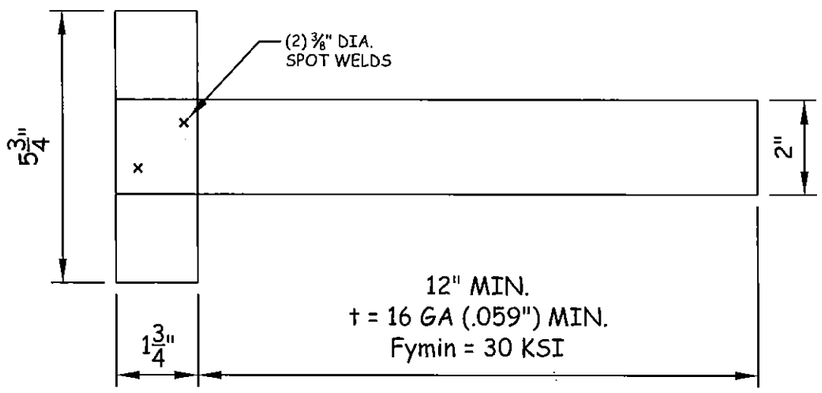


**T ANCHOR ATTACHMENT**

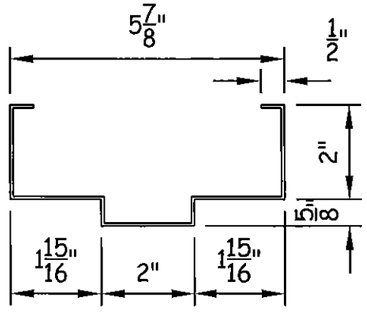


**16 GA. (.063" MIN.) STEEL FRAME PROFILE (TYP.)**

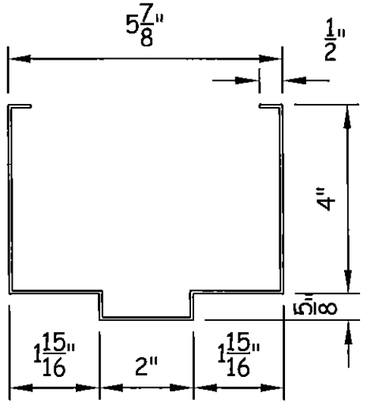


**16 GA. (.063" MIN.) STEEL FRAME PROFILE (TYP.)**


Quality Engineered Products Co., Inc.
4506 QUALITY LN.
TAMPA, FL. 33634
PH: (813) 885-1693 FX: (813) 884-2673


TITLE: 8'-0" x 8'-0" DOUBLE/ SINGLE FLUSH DOOR DETAILS

REVISIONS

| NO. | DESCRIPTION | BY | DATE |
|---|---|---|---|
| | | | |

CODY DAVIS LICENSE No. 75154 STATE OF FLORIDA 11/23/15 PROFESSIONAL ENGINEER
CODY DAVIS, P.E. FLORIDA LIC. # 75154

DATE: 11.23.15
DWN BY: KRM
CHK BY: CCD
SCALE: NTS

SHEET: 9 OF 9

P:\1000 Projects\1122 Global Engineering\1122.002 Docs\NOA\Engineering\Phase 2 NOA 12.1.15.13\DWG\AVANTI OEP NOA 10.0620.03.dwg, 11/23/2015 2:17:08 PM, lamaef