MIAMI-DADE COUNTY

DEPARTMENT OF REGULATORY AND ECONOMIC RESOURCES (RER)
BOARD AND CODE ADMINISTRATION DIVISION

MIAMI-DADE COUNTY
PRODUCT CONTROL SECTION
11805 SW 26 Street, Room 208
Miami, Florida 33175-2474
T (786) 315-2590 F (786) 315-2599
www.miamidade.gov/economy

NOTICE OF ACCEPTANCE (NOA)

Daybar Industries Limited
50 West Drive
Brampton, Ontario, Canada L6T2J4

SCOPE:

This NOA is being issued under the applicable rules and regulations governing the use of construction materials. The documentation submitted has been reviewed and accepted by Miami-Dade County RER -Product Control Section to be used in Miami Dade County and other areas where allowed by the Authority Having Jurisdiction (AHJ).
This NOA shall not be valid after the expiration date stated below. The Miami-Dade County Product Control Section (In Miami Dade County) and/or the AHJ (in areas other than Miami Dade County) reserve the right to have this product or material tested for quality assurance purposes. If this product or material fails to perform in the accepted manner, the manufacturer will incur the expense of such testing and the AHJ may immediately revoke, modify, or suspend the use of such product or material within their jurisdiction. RER reserves the right to revoke this acceptance, if it is determined by Miami-Dade County Product Control Section that this product or material fails to meet the requirements of the applicable building code.
This product is approved as described herein, and has been designed to comply with the Florida Building Code, including the High Velocity Hurricane Zone.

DESCRIPTION: Series "LS-18" Outswing Louvered Commercial Steel Doors w/ 16 ga Frames & w/wo Panic Exit Device-LM Impact

APPROVAL DOCUMENT: Drawing No **15-051** (former **#12-013 REV 1**), titled "Double & Single LS18 Outswing Commercial Steel Doors w/ 16 ga Steel frames-louvered assemblies", sheets 1 through 3, 3A and 4 thru 19 of 19 prepared by Tilteco Inc., dated 04/07/15, signed and sealed by Walter A. Tillit Jr., P. E., bearing the Miami-Dade County Product Control Revision stamp with the Notice of Acceptance number and expiration date by the Miami-Dade County Product Control Section.

MISSILE IMPACT RATING: Large and Small Missile Impact Resistant

Limitations: 1. This door is not approved where Air infiltration requirements is needed.
2. This door is not approved where water infiltration requirements is needed, unless complies with overhang requirements per FBC.
3. Min edge distance required for ITW 3/16" Tapcon (item #22) is 2-5/8" and for Power 5/16-18 caulk-in anchor is 3-3/4".

LABELING: Each unit shall bear a permanent label with the manufacturer's name or logo, Brampton, Ontario and series and following statement: "Miami-Dade County Product Control Approved", noted herein.

RENEWAL of this NOA shall be considered after a renewal application has been filed and there has been no change in the applicable building code negatively affecting the performance of this product.

TERMINATION of this NOA will occur after the expiration date or if there has been a revision or change in the materials, use, and/or manufacture of the product or process. Misuse of this NOA as an endorsement of any product, for sales, advertising or any other purposes shall automatically terminate this NOA. Failure to comply with any section of this NOA shall be cause for termination and removal of NOA.

ADVERTISEMENT: The NOA number preceded by the words Miami-Dade County, Florida, and followed by the expiration date may be displayed in advertising literature. If any portion of the NOA is displayed, then it shall be done in its entirety.

INSPECTION: A copy of this entire NOA shall be provided to the user by the manufacturer or its distributors and shall be available for inspection at the job site at the request of the Building Official.
This NOA **revises NOA # 15-0123.01** and consists of this page 1 and evidence pages E-1, as well as approval document mentioned above.
The submitted documentation was reviewed by **Ishaq I. Chanda, P.E.**

MIAMI-DADE COUNTY APPROVED

1/18/16

NOA No. 15-0427.01
Expiration Date: April 22, 2016
Approval Date: January 14, 2016

NOTICE OF ACCEPTANCE: EVIDENCE SUBMITTED

A. DRAWINGS

1. Manufacturer's parts and sections drawings (see below).
2. Drawing No **15-051** (former **#12-013 REV 1**), titled "Double & Single LS18 Outswing Commercial Steel Doors w/ 16 ga Steel frames-louvered assemblies", sheets 1 through 3, 3A and 4 thru 19 of 19 prepared by Tilteco Inc., dated 04/07/15, signed and sealed by Walter A. Tillit Jr., P. E. Note: This revision is FBC 2014 with no change.

B. TESTS (Submitted under files **#15-0123.01/#12-0216.07/# 10-0217.04/05-0620.07**) Original test conducted per SFBC PA 201, 202 and 203-94, now termed as TAS 201, 202 and 203-94.

1. Test reports on 1) Air Infiltration Test, per FBC, TAS 202-94 (except sp# 7 louver)
   2) Uniform Static Air Pressure Test, Loading per FBC, TAS 202-94
   3) Water Resistant Test, per FBC, TAS 202-94 (except sp# 7 louver)
   4) Large Missile Impact Test per FBC, TAS 201-94
   5) Cyclic Wind Pressure Loading per FBC, TAS 203-94
   6) Forced Entry Test, per FBC 2411.3.2.1 (b) and TAS 202-94

Along with marked-up drawings and installation diagram of outswing steel door, prepared by Hurricane Testing Laboratory, LLC, Test Report No. **HTL-0279-0719-03** dated 07-16 thru 08-18-2003 for specimen 1, 2, 3, 7 & 7EMB, signed and sealed by Vinu J. Abraham, P.E.
Note: The above test report has been revised with addendum letters dated Dec 16, 2004 & a revised marked-up drawing issued on 12/15/04 by Fenestration testing lab, signed & sealed by Vinu J. Abraham, P.E.

C. CALCULATIONS

1. Anchor Verification Calculations, complying w/ FBC-2014, dated 12-02-15, prepared by Tilteco, Inc., signed and sealed by Walter A. Tillit Jr., P. E.

D. QUALITY ASSURANCE

1. Miami Dade Department of Regulatory and Economic Resources (RER).

E. MATERIAL CERTIFICATIONS

1. Tensile Test report No. Job#0279-0719-03, dated March 02, 2004, issued by Q C Metallurgical, Inc, per ASTME-8, signed & sealed by Frank E. Grate, P.E.(transferred from file # **10-0217.04)**
2. Notice of Acceptance No. **11-0920.07** issued to Dyplast Product, LLC (Former Apache Products Company) for "EPS-Expanded Polystyrene Insulation", expiring on 01/11/17.

F. STATEMENTS

1. Statement letter of compliance to FBC-2014, dated APR 07, 2015, issued by Tilteco Inc., signed and sealed by Walter A. Tillit Jr., P. E
2. Statement letter of compliance to FBC-2010 and renewal with "No change, dated JAN 14, 2015, issued by Tilteco Inc., signed and sealed by Walter A. Tillit Jr., P. E. (#15-0123.01)
3. Facsimile correspondence dtd Nov. 14, 2005 from DAYBAR, requesting substitution of Stainless Steel in lieu of Galvanneal Steel & BCCO response dated 11/23/05.
4. Statement letter dated April 09, 2015, issued by Certified Testing lab, for re-test contract, signed by Jim Blakely.

G. OTHER

1. This NOA, conditionally **revises** NOA # **15-0123.01,** subjected to re-test, expiring 04/22/16.
2. Manufacturer/Distributor agreement between Daybar Industries Limited, Canada and Daybar Southeast Manufacturing, N. Key Largo, USA, signed by Mark Dodson and David Ball, respective officials of the companies.

Ishaq I. Chanda

Ishaq I. Chanda, P.E.
Product Control Examiner
NOA No. 15-0427.01
Expiration Date: April 22, 2016
Approval Date: January 14, 2016

SHEETS CONTENT:

SHEET #1 INDEX, COVER SHEET & GENERAL NOTES
SHEET #2 ASSEMBLY ELEVATIONS No 1, 2, 3.
SHEET #3 ASSEMBLY ELEVATIONS No 7, 7-EMB.
SHEET #3A MAX. DESIGN PRESSURE RATING SCHEDULE (PSF)
SHEET #4 OPTIONAL EMBOSSED DOOR SHEET CONFIGURATIONS.
SHEET #5 HORIZONTAL SECTIONS A-A & B-B.
SHEET #6 HORIZONTAL SECTIONS C-C & C'-C'.
SHEET #7 VERTICAL SECTIONS D-D, E, F, G, H, I AND HORIZONTAL SECTION J-J
SHEET #8 MODEL 1500-A AIR LOUVER DETAILS.
SHEET #9 FRAME SECTIONS, & REINFORCING DETAILS AND THRESHOLD DETAIL
SHEET #10 TYPICAL DOOR SECTION, "Z" ASTRAGAL & ASA STRIKE REINFORCING
SHEET #11 MULLION INSTALLATION DETAILS.
SHEET #12 SURFACE BOLT INSTALLATION AND DETAILS.
SHEET #13 DOOR TOP AND BOTTOM TYPICAL END CHANNEL DETAIL.
DOOR SURFACE CLOSER REINFORCEMENT DETAIL.
DOOR SURFACE CLOSER AND END CHANNEL ASSEMBLY.
SHEET #14 DOOR SNAP IN TOP CAP DETAILS.
SHEET #15 HINGE BAR REINFORCING FOR DOOR
ANSI #A115.1 #86 MORTISE LOCK/RIM PANIC REINFORCING
DOOR SURFACE BOLT REINFORCING DETAIL.
SHEET #16 #161 CYLINDRICAL LOCK AND DEAD BOLT REINFORCEMENT DETAIL.
SHEET #17 ANCHOR DETAILS.
SHEET #18 ANCHOR SCHEDULE.
WIRE ANCHOR DETAIL.
2 PIECES COMBINATION STUD ANCHOR DETAIL.
EMA BUTTERFLY ANCHOR DETAIL.
SHEET #19 BILL OF MATERIALS.

MAX. A.S.D. DESIGN PRESSURE RATINGS (psf) REQUIREMENTS FOR ASSEMBLIES. *

* SEE SHEETS 2 & 3 FOR ASSEMBLY DEFINITIONS

ASSEMBLY #	WHERE WATER INFILTRATION REQUIREMENT IS NEEDED **	WHERE WATER INFILTRATION REQUIREMENT IS NOT NEEDED
1	+ 65, – 65	+ 65, – 65
2	+ 65, – 65	+ 65, – 65
3	+ 65, – 65	+ 65, – 65
7	+ 65, – 53.3	+ 65, – 53.3
7-EMB	+ 65, – 53.3	+ 65, – 53.3

** APPROVED ONLY WHEN CANOPY IS PROVIDED IMMEDIATELY ABOVE THE DOOR LOCATION COVERING THE ENTIRE WIDTH OF DOOR AND PROJECTING OUT A DISTANCE EQUAL OR LARGER THAN THE DOORS HEIGHT.
NOT APPROVED IF THE ABOVE CONDITION IS NOT COMPLIED WITH.

THIS DOOR WAS NOT TESTED FOR AIR INFILTRATION

THIS DRAWING SHALL ONLY BE USED TO OBTAIN PERMITS IN THE STATE OF FLORIDA

GENERAL NOTES AND SPECIFICATIONS:

1. DOUBLE & SINGLE SERIES LS18 FLUSH/EMBOSSED OUTSWING COMMERCIAL STEEL DOOR W/SERIES "AS" 16 GAGE STEEL FRAME LOUVERED ASSEMBLIES, SHOWN ON THIS PRODUCT APPROVAL DOCUMENT (P.A.D.) HAS BEEN VERIFIED FOR CODE COMPLIANCE IN ACCORDANCE WITH THE **2014** (5th EDITION) OF THE FLORIDA BUILDING CODE. DOOR MAY BE INSTALLED AT HIGH VELOCITY HURRICANE ZONES (MIAMI-DADE / BROWARD COUNTIES).

DESIGN WIND LOADS SHALL BE DETERMINED AS PER SECTIONS **1620** OF THE ABOVE MENTIONED CODE, USING ASCE 7-10 AND SHALL NOT EXCEED THE MAXIMUM (A.S.D.) DESIGN PRESSURE RATINGS INDICATED ON SHEETS 1 & 3A.

IN ORDER TO VERIFY THE ABOVE CONDITION, ULTIMATE DESIGN WIND LOADS DETERMINED PER ASCE 7-10 SHALL BE FIRST REDUCED TO A.S.D. DESIGN WIND LOADS BY MULTIPLYING THEM BY 0.6 IN ORDER TO COMPARE THESE W/ MAX. (A.S.D.) DESIGN PRESSURE RATINGS INDICATED ON SHEETS 1 & 3A.

IN ORDER TO VERIFY THAT COMPONENTS AND ANCHORS ON THIS P.A.D., AS TESTED, WERE NOT OVER STRESSED, A 33% INCREASE IN ALLOWABLE LOADS FOR WIND LOADS WAS NOT USED IN THEIR ANALYSIS. HOWEVER, FASTENERS SPACING TO WOOD HAS BEEN DETERMINED IN ACCORDANCE WITH N.D.S. 2012.
THIS DOOR'S ADEQUACY FOR WIND AND IMPACT LOAD HAS BEEN VERIFIED IN ACCORDANCE WITH SECTION **1626** OF THE ABOVE MENTIONED CODE AS PER PROTOCOLS TAS-201, TAS-202, TAS-203 AS PER HURRICANE TEST LABORATORY REPORT #0279--0719-03 AND AS PER SUBMITTED STRUCTURAL CALCULATIONS, PERFORMED AS PER SECTION **1616** OF THE FLORIDA BUILDING CODE.

2. ALL COMPONENTS SHALL BE AS SPECIFIED ON APPLICABLE DETAIL SHEETS AND AT BILL OF MATERIALS (SHEET 19) OF THIS DRAWING.

3. COMPLIANCE OF EGRESS / ESCAPE REQUIREMENTS OF THESE DOORS PER FBC TO BE DETERMINED BY BUILDING OFFICIALS ON A CASE-BY--CASE BASIS.

4. ALL SCREWS USED FOR ASSEMBLY CONNECTIONS (METAL TO METAL) TO BE STAINLESS STEEL 304 OR 316 AISI SERIES OR CORROSION RESISTANT COATED CARBON STEEL AS PER DIN 50018 WITH 50 ksi YIELD POINT AND 90 ksi TENSILE STRENGTH & SHALL COMPLY W/ FLORIDA BUILDING CODE SECTION 2411.3.3.4.

5. ALL WELDING TO CONFORM W/AMERICAN WELDING SOCIETY A.W.S. D.1.3 AND D--19.0 REGULATIONS. USE E 60XX ELECTRODES

6. ALL ANCHORS FOR DOOR FRAME CONNECTIONS TO EXISTING STRUCTURE SHALL BE AS SPECIFIED ON SHEET 17 OF THIS DRAWING. MAXIMUM ANCHORS SPACINGS SHALL BE AS PER SCHEDULE ON SHEET 18 AND ELEVATIONS ON SHEETS 2 & 3 OF THIS DRAWING. SEE SHEET 2, 3 & 7 FOR THRESHOLD ANCHORS, AND SHEET 11 FOR MULLION ANCHORS.

7. PROVIDE MAX. LOAD BEARING SHIM SPACE AS INDICATED ON SHEETS 5, 6, 7 & 17 OF 19.

8. **THIS DOOR WILL NOT REQUIRE A HURRICANE PROTECTION DEVICE.**

9. SEE MAX. A.S.D. DESIGN PRESSURE RATING REQUIREMENTS FOR WATER INFILTRATION AND LIMITATIONS FOR AIR INFILTRATION FOR ASSEMBLIES ON THIS SHEET.

10. PROVIDE SPECIFIED SEALANT AT ALL DOOR FRAME, THRESHOLD AND VISION LITE COMPONENTS INDICATED ON THIS DRAWING.

11. (a) THIS PRODUCT APPROVAL DOCUMENT (P.A.D.) PREPARED BY THIS ENGINEER IS GENERIC AND DOES NOT PROVIDE INFORMATION FOR A SITE SPECIFIC PROJECT; i.e. WHERE THE SITE CONDITIONS DEVIATE FROM THE P.A.D.

(b) CONTRACTOR TO BE RESPONSIBLE FOR THE SELECTION, PURCHASE AND INSTALLATION INCLUDING LIFE SAFETY OF THIS PRODUCT, BASED ON THIS P.A.D., PROVIDED HE/SHE DOES NOT DEVIATE FROM THE CONDITIONS DETAILED ON THIS DOCUMENT. CONSTRUCTION SAFETY AT SITE IS THE CONTRACTOR'S RESPONSIBILITY.

(c) THIS PRODUCT APPROVAL DOCUMENT (P.A.D.) WILL BE CONSIDERED INVALID IF ALTERED BY ANY MEANS.

(d) SITE SPECIFIC PROJECTS SHALL BE PREPARED BY A FLORIDA REGISTERED ENGINEER OR ARCHITECT WHICH WILL BECOME THE ENGINEER OF RECORD (E.O.R.) FOR THE PROJECT AND WHO WILL BE RESPONSIBLE FOR THE PROPER USE OF THE P.A.D.

(e) ORIGINAL P.A.D. SHALL BEAR THE DATE, SEAL AND SIGNATURE OF THE PROFESSIONAL ENGINEER OF RECORD THAT PREPARED IT.

12. PRODUCT MANUFACTURER'S LABEL SHALL BE LOCATED ON A READILY VISIBLE LOCATION AT PRODUCT IN ACCORDANCE WITH SECTION 1710.5 OF THE FLORIDA BUILDING CODE. ONE LABEL SHALL BE PLACED FOR EVERY OPENING.

Florida Building Code (High Velocity Hurricane Zone)

PRODUCT REVISED
no complying with the Florida Building Code
Acceptance No 15-0427.01
Expiration Date APR 22 2016
Miami-Dade Product Control
MIAMI-DADE COUNTY

WALTER A. TILLIT JR. LICENSE No. 44167 STATE OF FLORIDA PROFESSIONAL ENGINEER
P.E. SEAL/SIGNATURE/DATE

© 2015 TILTECO INC. (ENGINEERING)

TILTECO INC.
TILLIT TESTING & ENGINEERING COMPANY
6355 N.W. 36th. St. Ste. 305, VIRGINIA GARDENS, FL. 33166
Phone : (305)871-1530 . Fax : (305)871-1531
e-mail: tilteco@aol.com
EB-0006719
WALTER A. TILLIT Jr. P.E.
FLORIDA Lic. # 44167

DOUBLE & SINGLE SERIES LS18 OUTSWING COMMERCIAL STEEL DOOR W/SERIES "AS" 16 GAGE STEEL FRAME LOUVERED ASSEMBLIES.

F.R.L.

DAYBAR INDUSTRIES LTD
50 WEST DRIVE, BRAMPTON, ON CANADA, L6T 2J4
TEL: 905 625-8000 FAX: 905 625-4204

DRAWN BY

03/27/15 DATE

15-051 DRAWING No

SHEET 1 OF 19

REV. No	DESCRIPTION	DATE	REV. No	DESCRIPTION	DATE
1	OLD 12-013	03/27/15	3		
2			4		

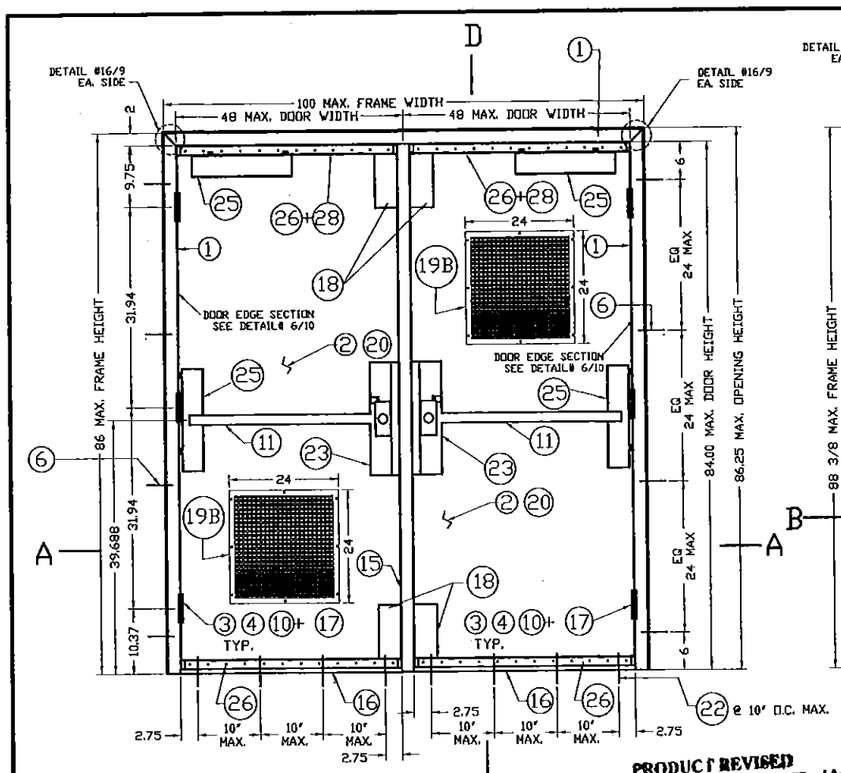

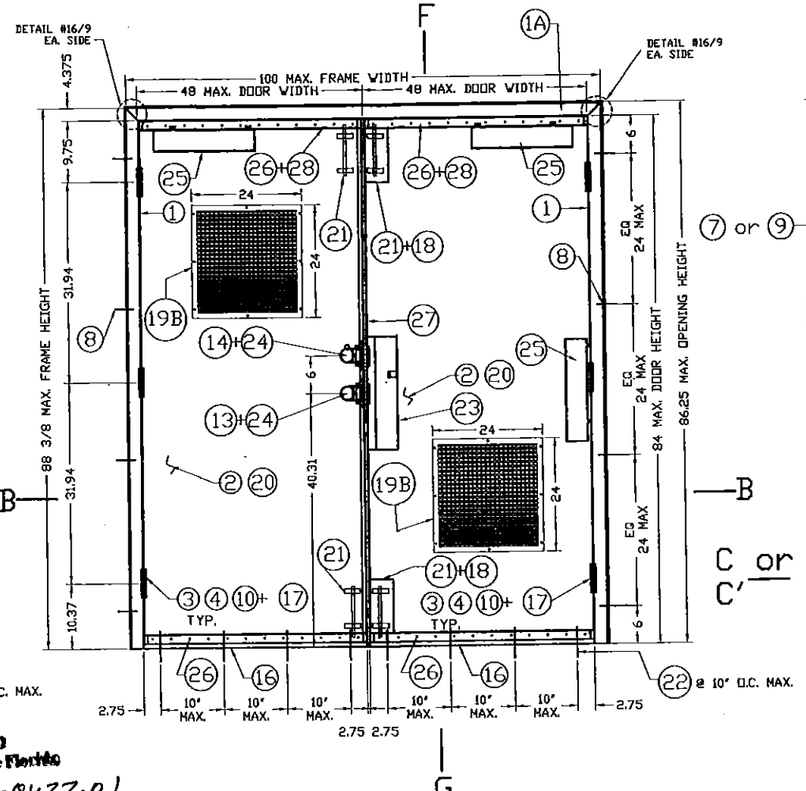

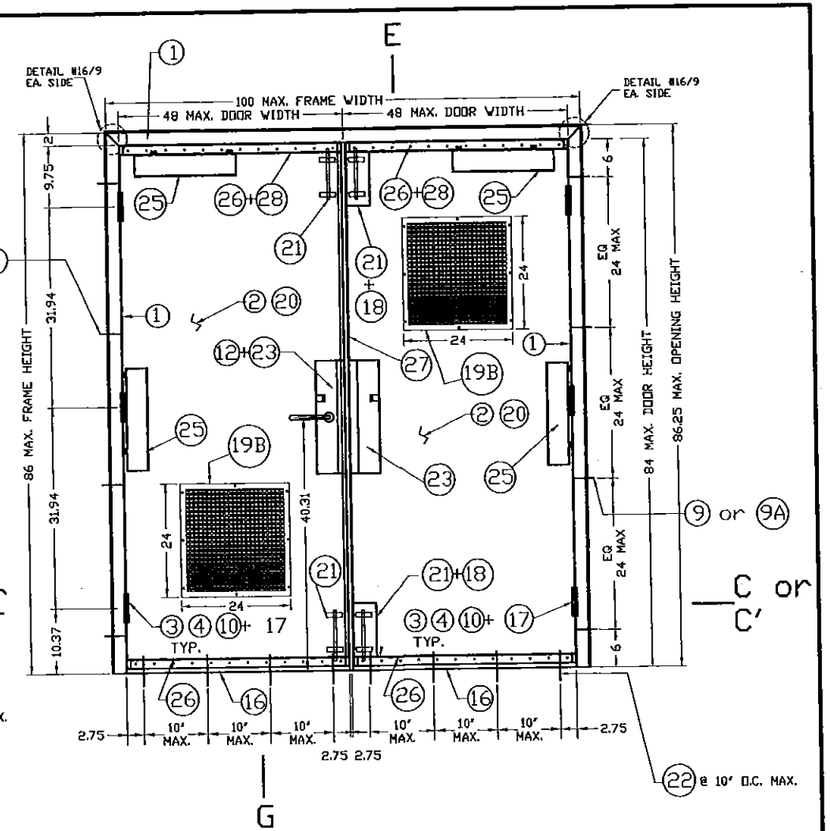

ASSEMBLY #1, * INTERIOR ELEVATION
PAIR OF OUTSWING DOORS
WALL CONDITION : MASONRY
ANCHORS: WIRE (6) DETAIL #21
VON DUPRIN 98/99L TRIM SERIES RIM EXIT (11) AT BOTH DOORS
4 1/2" HAGER MODEL #BB1168 STEEL BUTT HINGE AND
4 1/2" STANLEY MODEL #FBB168 STEEL BUTT HINGE (10)
VON DUPRIN 9954 REMOVABLE MULLION (15) (FOR DOUBLE DOOR ONLY)
DOOR CORE ITEM (20) : EXPANDED POLYSTYRENE OR HONEYCOMB PAPER FULL FLUSH
AIR LOUVER INC. METAL LOUVER #1500A (19B), W/24"x24" (DOOR CUTOUT) AND LOCATED AT 12" CLEAR FROM TOP OR BOTTOM OF DOOR AND CENTERED W/ DOOR

OUTSWING SINGLE & DOUBLE DOORS W/ VON DUPRIN RIM PANIC DEVICES

PRODUCT REVISED
no complying with the Florida
Building Code
Acceptance No. 15-0427.01
Expiration Date 4/22/16
By Mr. Product Control

ASSEMBLY #2, * INTERIOR ELEVATION
PAIR OF OUTSWING DOORS
WALL CONDITION : MASONRY
ANCHORS: EMA EXISTING MASONRY ANCHOR DET. #22
SCH-D SERIES CYLINDRICAL LOCK (13) +SCH-B SERIES DEAD BOLT (14)
HAGER #275D SURFACE BOLTS (21) (TOP & BOTTOM) AT TWO DOORS
4 1/2" HAGER MODEL #BB1279 STEEL BUTT HINGE AND
4 1/2" STANLEY MODEL #FB179 STEEL BUTT HINGE (10)
"Z" ASTRAGAL (27) W/ ASA STRIKE FOR CYLINDRICAL LOCK AND DEAD BOLT STRIKE
DOOR CORE (20) : EXPANDED POLYSTYRENE OR HONEYCOMB PAPER FULL FLUSH
AIR LOUVER INC. METAL LOUVER #1500A (19B), W/24"x24" (DOOR CUTOUT) AND LOCATED AT 12" CLEAR FROM TOP OR BOTTOM OF DOOR AND CENTERED W/ DOOR

OUTSWING SINGLE DOOR W/ TWO SURFACE BOLTS & DOUBLE DOORS W/ FOUR SURFACE BOLTS

ASSEMBLY #3, * INTERIOR ELEVATION
PAIR OF OUTSWING DOORS
WALL CONDITION : WOOD STUDS
ANCHORS: 2 PIECE COMBINATION STUD ANCHOR (7) DETAIL #20 OR CARRIAGE BOLT (9A) W/ EMA (DET. #22A) OR WOOD SCREW LAG BOLT (9) W/ EMA (DETAIL #22B)
SCH-L9000 SERIES #86 MORTISE LOCK (12) (W/ DEAD BOLT INCLUDED)
HAGER #275D SURFACE BOLTS (21) (TOP & BOTTOM) AT TWO DOORS
4 1/2" HAGER MODEL #BB1279 STEEL BUTT HINGE AND
4 1/2" STANLEY MODEL #FB179 STEEL BUTT HINGE (10)
"Z" ASTRAGAL (27) W/ ASA STRIKE FOR MORTISE LOCK.
DOOR CORE (20) EXPANDED POLYSTYRENE OR HONEYCOMB PAPER FULL FLUSH
AIR LOUVER INC. METAL LOUVER #1500A (19B), W/24"x24" (DOOR CUTOUT) AND LOCATED AT 12" CLEAR FROM TOP OR BOTTOM OF DOOR AND CENTERED W/ DOOR

OUTSWING SINGLE DOOR W/ TWO SURFACE BOLTS & DOUBLE DOORS W/ FOUR SURFACE BOLTS

ASSEMBLY ELEVATIONS #1, 2 & 3

SEE SECTIONS ON SHEETS 5, 6 & 7

Florida Building Code (High Velocity Hurricane Zone)

- SEE SHEET 1 FOR MAXIMUM A.S.D. DESIGN PRESSURE RATING FOR EACH ASSEMBLY, BASED ON WATER INFILTRATION REQUIREMENTS AND AIR INFILTRATION LIMITATIONS.
- SEE SHEET 3A FOR MAXIMUM A.S.D. DESIGN PRESSURE RATING SCHEDULE FOR ASSEMBLY COMBINATIONS, BASED ON WATER INFILTRATION REQUIREMENTS AND AIR INFILTRATION LIMITATIONS.

MIAMI-DADE COUNTY

WALTER A. TILLIT JR. LICENSED No. 44167 STATE OF FLORIDA PROFESSIONAL ENGINEER
P.E. SEAL/SIGNATURE/DATE

© 2015 TILTECO INC. (ENGINEERING)

TILTECO INC.
TILLIT TESTING & ENGINEERING COMPANY
8355 N.W. 36th. St., Ste. 305, VIRGINIA GARDENS, Fl. 33166
Phone : (305)871-1530 . Fax : (305)871-1531
e-mail: tilteco@aol.com
EB-0006719
WALTER A. TILLIT Jr. P.E.
FLORIDA Lic. # 44167

DOUBLE & SINGLE SERIES LS18 OUTSWING COMMERCIAL STEEL DOOR W/SERIES "AS" 16 GAGE STEEL FRAME LOUVERED ASSEMBLIES.

DAYBAR INDUSTRIES LTD
50 WEST DRIVE, BRAMPTON, ON CANADA, L6T 2J4
TEL: 905 625-8000 FAX: 905 625-4204

REV. No	DESCRIPTION	DATE	REV. No	DESCRIPTION	DATE
1	OLD 12-013	03/27/15	3		
2			4		

F.R.L.
DRAWN BY
03/27/15
DATE
15-051
DRAWING No
SHEET 2 OF 19

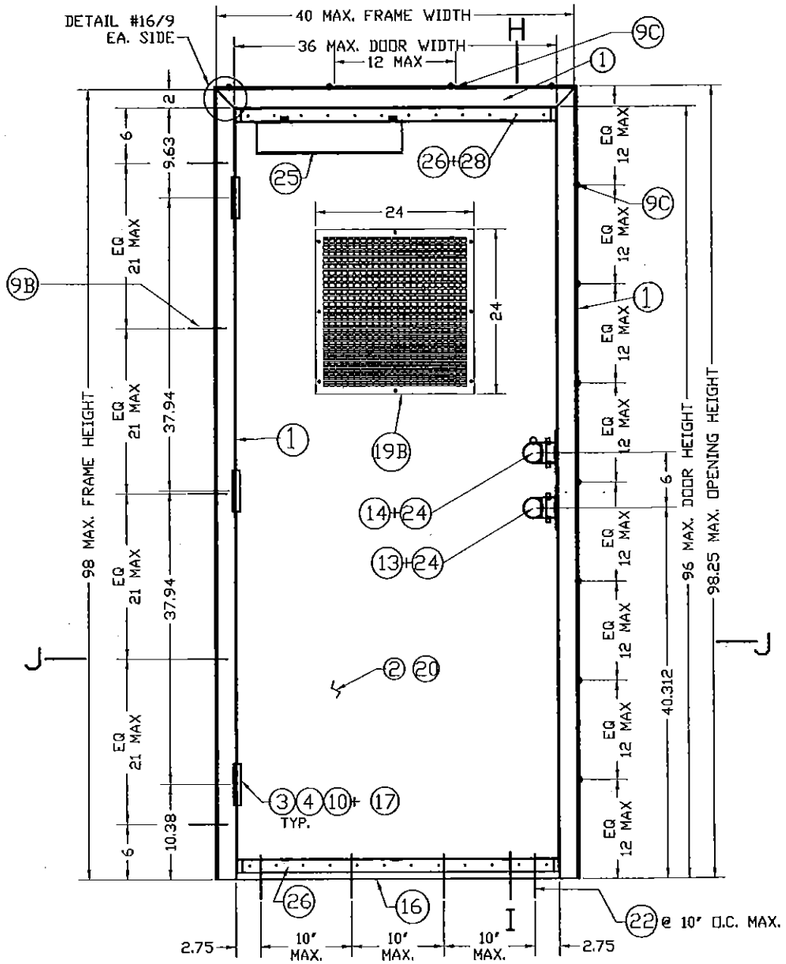

ASSEMBLY #7 * EXTERIOR ELEVATION
SINGLE DOOR OUTSWING
WALL CONDITION - WELDED HOT ROLLED
3/8" MIN. THICK STRUCTURAL STEEL CHANNEL FRAME JAMB AND HEAD.
ANCHORS:3/8"x3 1/2" FLAT HEAD MACHINE SCREW, LOCK WASHER & NUT W/ EMA (DET #23A), OR FRAME (1) WELDED @ 12" O.C. AT JAMB AND HEAD INCLUDING TOP & BOTTOM OF JAMB (DET #23B).
SCH-D SERIES CYLINDRICAL LOCK (13)+ SCH-B SERIES DEAD BOLT (14)
4 1/2" HAGER MODEL # BB1279 STEEL BUTT HINGE (10)
DOOR CORE (20) EXPANDED POLYSTYRENE OR HONEYCOMB PAPER.
FULL FLUSH
AIR LOUVER INC., METAL LOUVER #1500-A (19B), W/ 24"x24" DOOR CUT-OFF, AND LOCATED AT 12" FROM TOP OF DOOR TO TOP OF LOUVER

OUTSWING SINGLE DOORS WITHOUT SURFACE BOLTS

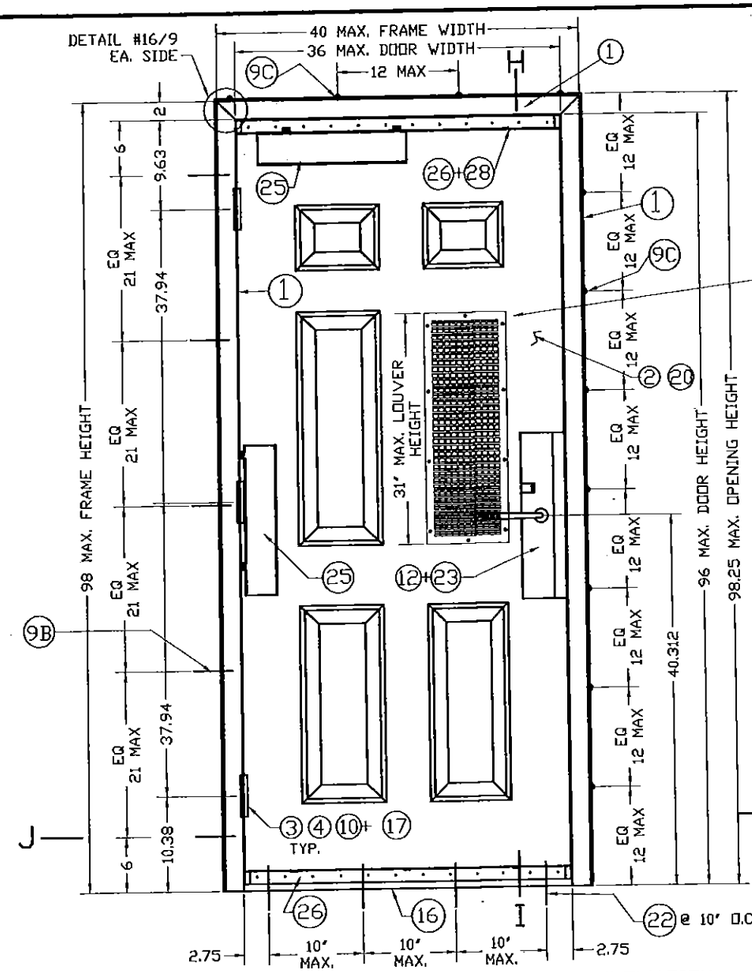

(19B) AIR LOUVER INC., METAL LOUVER #1500-A IS PERMITTED ON EMBOSSED DOORS AT TOP OR BOTTOM PROVIDED THE LOUVER'S MOUNTING FLANGE MUST HAVE FULL FLUSH CONTACT WITH FLAT PORTION OF DOOR SKIN. SEE DETAILS ON SHEET 8/19. MAX. AREA = 576 in^2=4ft^2

ASSEMBLY * #7-EMB EXTERIOR ELEVATION
SINGLE DOOR OUTSWING
WALL CONDITION - WELDED HOT ROLLED
STRUCTURAL STEEL CHANNEL FRAME JAMB AND HEAD.
ANCHORS:3/8"x3 1/2" FLAT HEAD MACHINE SCREW, LOCK WASHER & NUT W/ EMA (DET #23A), OR FRAME (1) WELDED @ 12" O.C. AT JAMB AND HEAD INCLUDING TOP & BOTTOM OF JAMB (DET #23B).
SCH-L SERIES #86 MORTISE LOCK (12) W/ DEAD BOLT INCLUDED.
4 1/2" HAGER MODEL # BB1279 STEEL BUTT HINGE (10)
DOOR CORE (20) EXPANDED POLYSTYRENE OR HONEYCOMB PAPER.
FULL EMBOSSED
AIR LOUVER INC., METAL LOUVER #1500-A (19B), W/ 24"x24" DOOR CUT-OFF, AND LOCATED AT 12" FROM TOP OF DOOR TO TOP OF LOUVER

OUTSWING SINGLE DOORS WITHOUT SURFACE BOLTS

PRODUCT REVISED
to complying with the Florida
Building Code
Acceptance No. 15-0427.01
Expiration Date 4/22/16
By: [signature]
Miami-Dade Product Control

ASSEMBLY ELEVATIONS #7 & #7-EMB

SEE SECTIONS ON SHEET

Florida Building Code (High Velocity Hurricane Zone)

- SEE SHEET 1 FOR MAXIMUM A.S.D. DESIGN PRESSURE RATING FOR EACH ASSEMBLY, BASED ON WATER INFILTRATION REQUIREMENTS AND AIR INFILTRATION LIMITATIONS.
- SEE SHEET 3A FOR MAXIMUM A.S.D. DESIGN PRESSURE RATING SCHEDULE FOR ASSEMBLY COMBINATIONS, BASED ON WATER INFILTRATION REQUIREMENTS AND AIR INFILTRATION LIMITATIONS.

MIAMI-DADE COUNTY

WALTER A. TILLIT JR. LICENSE No. 44167 STATE OF FLORIDA PROFESSIONAL ENGINEER
SEAL/SIGNATURE/DATE

© 2015 TILTECO INC. (ENGINEERING)

TILTECO INC.
TILLIT TESTING & ENGINEERING COMPANY
8355 N.W. 36th. St. Ste. 305, VIRGINIA GARDENS, FL. 33166
Phone : (305)871-1530 . Fax : (305)871-1531
e-mail: tilteco@aol.com
EB-0006719
WALTER A. TILLIT Jr. P.E.
FLORIDA Lic. # 44167

DOUBLE & SINGLE SERIES LS18 OUTSWING COMMERCIAL STEEL DOOR W/SERIES "AS" 16 GAGE STEEL FRAME LOUVERED ASSEMBLIES.

DAYBAR INDUSTRIES LTD
50 WEST DRIVE, BRAMPTON, ON CANADA, L6T 2J4
TEL: 905 625-8000 FAX: 905 625-4204

REV. No	DESCRIPTION	DATE	REV. No	DESCRIPTION	DATE
1	OLD 12-013	03/27/15	3		
2			4		

F.R.L.
DRAWN BY
03/27/15
DATE
15-051
DRAWING No
SHEET 3 OF 19

MAX. A.S.D. DESIGN PRESSURE RATING (psf.) SCHEDULE FOR INSTALLATIONS COMBINING ASSEMBLIES #1 THRU #7-EMB BETWEEN EACH OTHER FOR A GIVEN ANCHOR JAMB TYPE *, **

ITEM (SEE SHEET 19)	ANCHOR SPECIFICATIONS AT JAMBS *	ASSEMBLY #1 (SEE SHEET 2) **	ASSEMBLY #2 (SEE SHEET 2) **	ASSEMBLY #3 (SEE SHEET 2) **	ASSEMBLY #7 (SEE SHEET 3) **	ASSEMBLY #7-EMB (SEE SHEET 3) **
6	0.157" DIA.x9 1/2" LONG WIRE ANCHOR (SEE DETAIL 21/17)	+65, -65	+65, -65	+65, -65	+65, -53.3	+65, -53.3
7	2 PIECE COMBINATION STUD ANCHOR (SEE DETAIL 20/17)	+65, -65	+65, -65	+65, -65	+65, -53.3	+65, -53.3
8	EXISTING MASONRY ANCHOR & E.M.A. (SEE DETAIL 22/17)	+65, -65	+65, -65	+65, -65	+65, -53.3	+65, -53.3
9	EXISTING WOOD BUCK ANCHOR W/WOOD SCREW LAG BOLT & E.M.A. (SEE DETAIL 22A/17)	+65, -65	+65, -65	+65, -65	+65, -53.3	+65, -53.3
9A	EXISTING WOOD BUCK ANCHOR W/ STEEL CARRIAGE BOLT & E.M.A. (SEE DETAIL 22B/17)	+65, -65	+65, -65	+65, -65	+65, -53.3	+65, -53.3
9B	CHANNEL IRON THROUGH BOLTING W/3/8" x 3 1/2" STEEL FLAT HEAD MACHINE SCREW & E.M.A. (SEE DETAIL 23A/17)	+65, -53.3	+65, -53.3	+65, -53.3	+65, -53.3	+65, -53.3
9C	CHANNEL IRON W/3/8" STITCH WELD (SEE DETAIL 23B/17)	+65, -53.3	+65, -53.3	+65, -53.3	+65, -53.3	+65, -53.3

* NOTES ON FRAME HEAD REQUIREMENTS

1. FOR SINGLE & DOUBLE DOORS INSTALLED AT WOOD FRAME BUILDINGS, DOOR HEADS SHALL BE CONTINUOUSLY RETAINED BY EXISTING BUILDINGS WOOD HEADER FOLLOWING DETAILS AS PER SECTION E, SHEET 7.

2. FOR SINGLE & DOUBLE DOORS INSTALLED AT STEEL FRAME BUILDINGS, DOOR HEADS SHALL BE CONTINUOUSLY WELDED TO EXISTING BUILDINGS STEEL FRAME HEADER FOLLOWING DETAILS AS PER SECTION H, SHEET 7 & DETAIL 23B ON SHEET 17.

3. FOR SINGLE & DOUBLE DOORS INSTALLED AT CONCRETE /MASONRY BUILDINGS, DOOR HEADS NEED NOT BE ATTACHED TO EXISTING BUILDINGS HEADER. APPLICABLE TO SECTIONS D & F, SHEET 7.

PRODUCT REVISED
as complying with the Florida Building Code
Acceptance No. 15-0427.01
Expiration Date 4/22/16
By [signature]
Miami Dade Product Control

** NOTES ON WATER AND AIR INFILTRATION REQUIREMENTS AND LIMITATIONS

1. SEE GENERAL NOTE 9 ON SHEET 1 OF 19 FOR REQUIREMENTS AND LIMITATIONS

Florida Building Code (High Velocity Hurricane Zone)

MIAMI-DADE COUNTY

WALTER A. TILLIT JR. LICENSE No. 44167 STATE OF FLORIDA PROFESSIONAL ENGINEER

P.E. SEAL/SIGNATURE/DATE

© 2015 TILTECO INC. (ENGINEERING)

TILTECO INC.
TILLIT TESTING & ENGINEERING COMPANY
8355 N.W. 36th. St., Ste. 305, VIRGINIA GARDENS, Fl. 33166
Phone : (305)871-1530 . Fax : (305)871-1531
e-mail: tilteco@aol.com
EB-0006719
WALTER A. TILLIT Jr. P.E.
FLORIDA Lic. # 44167

DOUBLE & SINGLE SERIES LS18 OUTSWING COMMERCIAL STEEL DOOR W/SERIES "AS" 16 GAGE STEEL FRAME LOUVERED ASSEMBLIES.

DAYBAR INDUSTRIES LTD
50 WEST DRIVE, BRAMPTON, ON CANADA, L6T 2J4
TEL: 905 625-8000 FAX: 905 625-4204

REV. No	DESCRIPTION	DATE	REV. No	DESCRIPTION	DATE
1	OLD 12-013	03/27/15	3		
2			4		

F.R.L.
DRAWN BY
03/27/15
DATE
15-051
DRAWING No
SHEET 3A OF 19

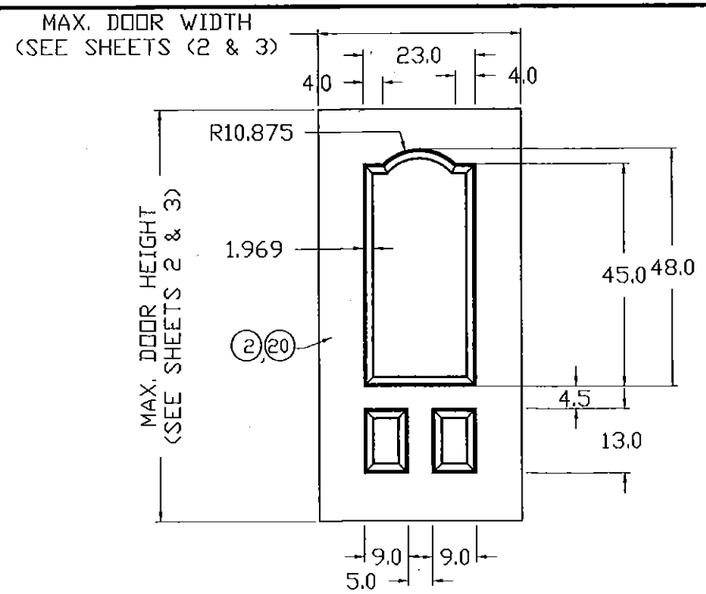

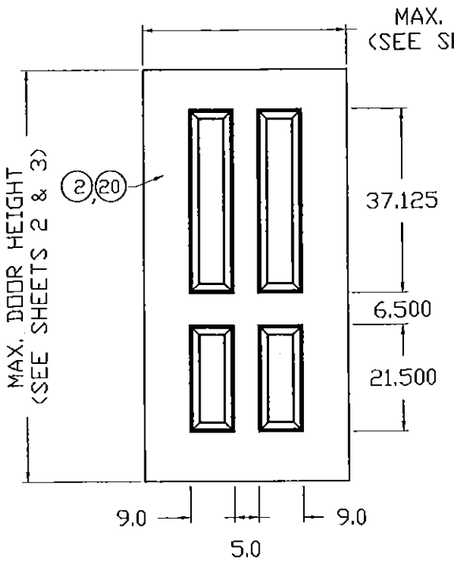

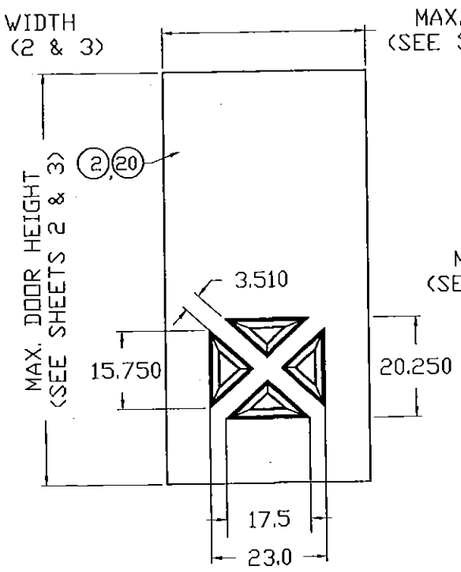

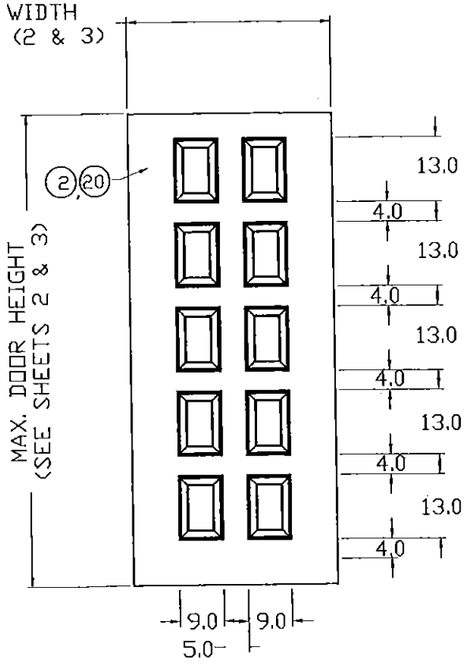

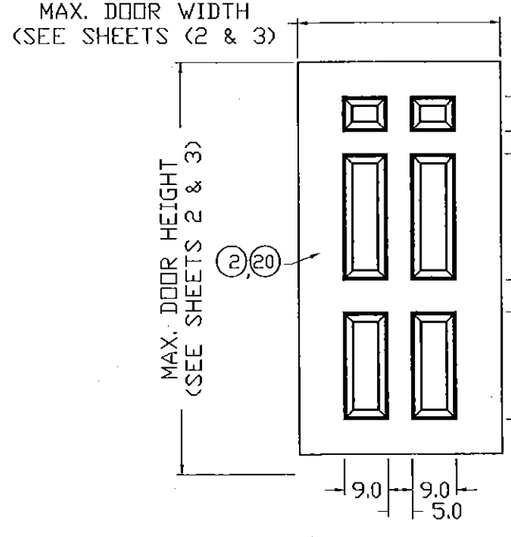

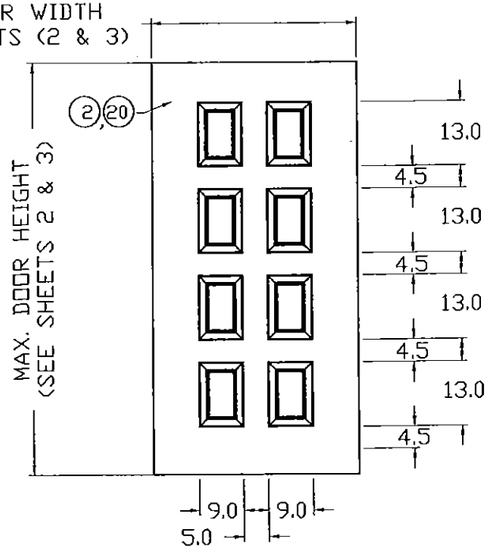

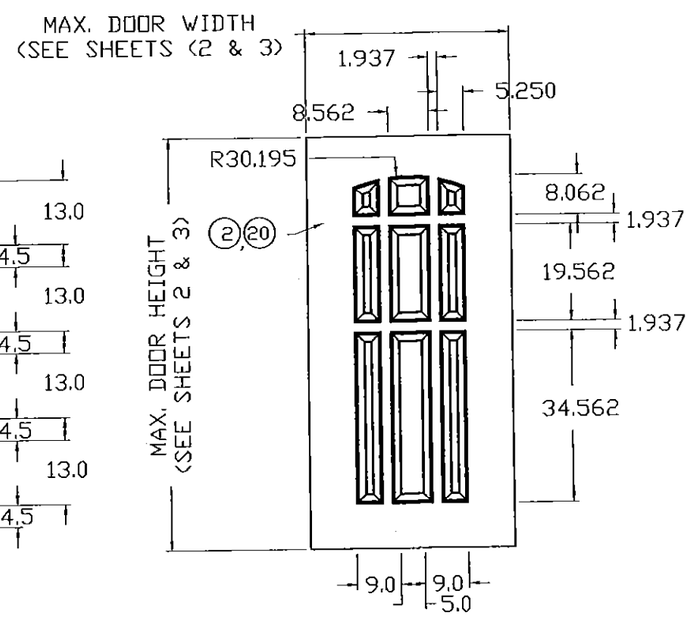

PRODUCT REVISED
as complying with the Florida
Building Code
Acceptance No 15-0427.01
Expiration Date 4/22/16
By _____
Miami-Dade Product Control

OPTIONAL EMBOSSED DOOR SLAB W/ LOUVERS SHEET CONFIGURATIONS

Florida Building Code (High Velocity Hurricane Zone)

NOTE:
EMBOSSED DOORS W/ LOUVERS PERMITTED IN SINGLES & PAIRS LIMITED TO DESIGN PRESSURES NOTED FOR EACH ASSEMBLY

MIAMI-DADE COUNTY

WALTER A. TILLIT JR. LICENSE No. 44167 STATE OF FLORIDA PROFESSIONAL ENGINEER
P.E. SEAL/SIGNATURE/DATE

© 2015 TILTECO INC. (ENGINEERING)

TILTECO INC.
TILLIT TESTING & ENGINEERING COMPANY
6355 N.W. 36th. St., Ste. 305, VIRGINIA GARDENS, Fl. 33166
Phone : (305)871-1530 . Fax : (305)871-1531
e-mail: tilteco@aol.com
EB-0006719
WALTER A. TILLIT Jr. P.E.
FLORIDA Lic. # 44167

DOUBLE & SINGLE SERIES LS18 OUTSWING COMMERCIAL STEEL DOOR W/SERIES "AS" 16 GAGE STEEL FRAME LOUVERED ASSEMBLIES.

DAYBAR INDUSTRIES LTD
50 WEST DRIVE, BRAMPTON,
ON CANADA, L6T 2J4
TEL: 905 625-8000 FAX: 905 625-4204

REV. No	DESCRIPTION	DATE	REV. No	DESCRIPTION	DATE
1	OLD 12-013	03/27/15	3		
2			4		

F.R.L.
DRAWN BY
03/27/15
DATE
15-051
DRAWING No
SHEET 4 OF 19

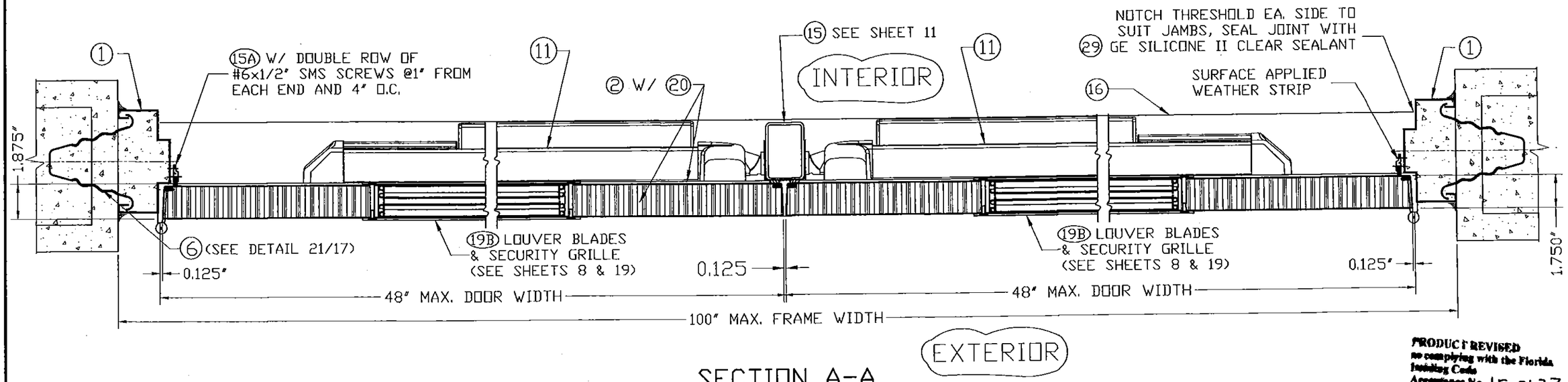

SECTION A-A

SCALE: 3/16"=1"

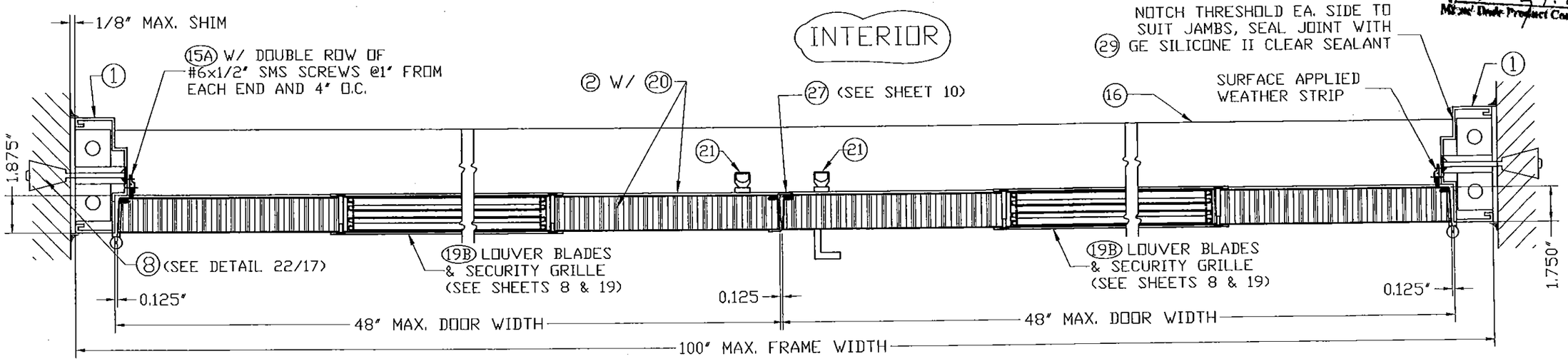

SECTION B-B

SCALE: 3/16"=1"

PRODUCT REVISED
no complying with the Florida Building Code
Acceptance No. 15-0427.01
Expiration Date 4/22/16
Miami-Dade Product Control

Florida Building Code (High Velocity Hurricane Zone)

MIAMI-DADE COUNTY

WALTER A. TILLIT JR. LICENSE No. 44167 STATE OF FLORIDA PROFESSIONAL ENGINEER

P.E. SEAL/SIGNATURE/DATE

© 2015 TILTECO INC. (ENGINEERING)

TILTECO INC.
TILLIT TESTING & ENGINEERING COMPANY
6355 N.W. 36th. St., Ste. 305, VIRGINIA GARDENS, FL 33166
Phone : (305)871-1530 . Fax : (305)871-1531
e-mail: tilteco@aol.com
EB-0006719
WALTER A. TILLIT Jr. P.E.
FLORIDA Lic. # 44167

DOUBLE & SINGLE SERIES LS18 OUTSWING COMMERCIAL STEEL DOOR W/SERIES "AS" 16 GAGE STEEL FRAME LOUVERED ASSEMBLIES.

F.R.L.

DRAWN BY

DAYBAR INDUSTRIES LTD
50 WEST DRIVE, BRAMPTON, ON CANADA, L6T 2J4
TEL: 905 625-8000 FAX: 905 625-4204

03/27/15 DATE

15-051 DRAWING No

REV. No	DESCRIPTION	DATE	REV. No	DESCRIPTION	DATE
1	OLD 12-013	03/27/15	3		
2			4		

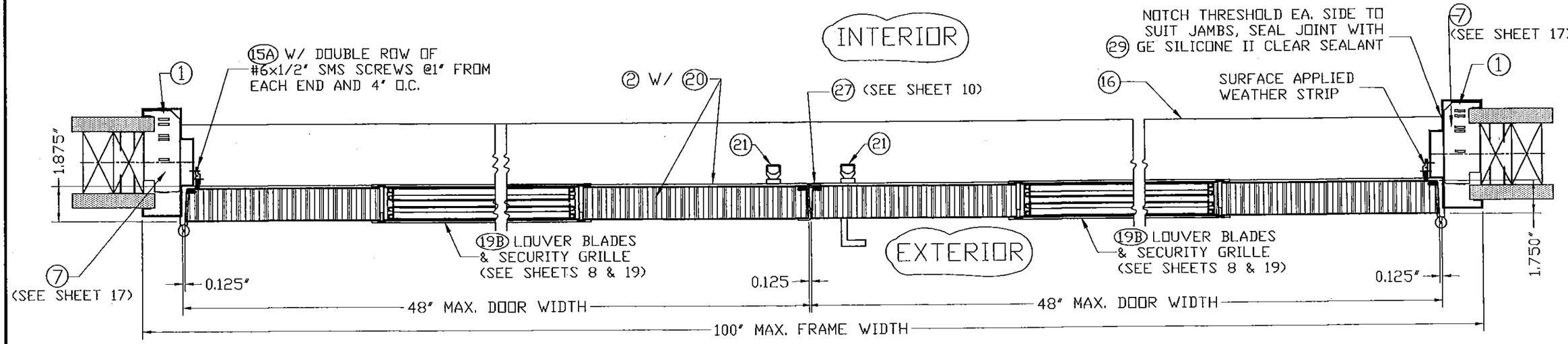

SECTION C-C

SCALE: 3/16"=1'

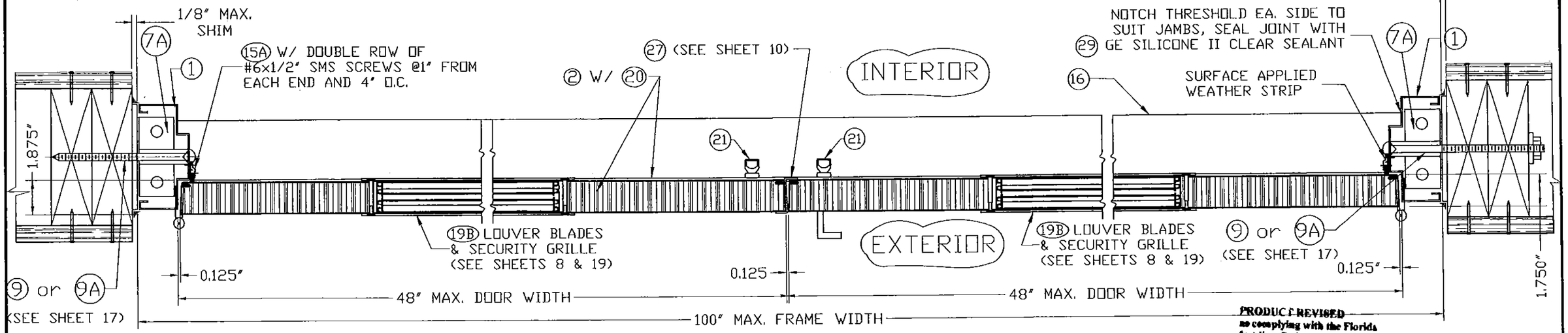

SECTION C'-C'

SCALE: 3/16"=1'

PRODUCT REVISED
as complying with the Florida Building Code
Acceptance No. 15-0427.01
Expiration Date 4/22/16
Approved By: Miami-Dade Product Control

Florida Building Code (High Velocity Hurricane Zone)

MIAMI-DADE COUNTY

WALTER A. TILLIT JR. LICENSE No. 44167 STATE OF FLORIDA PROFESSIONAL ENGINEER
P.E. (SEAL/SIGNATURE/DATE)

© 2015 TILTECO INC. (ENGINEERING)

TILTECO INC.
TILLIT TESTING & ENGINEERING COMPANY
6355 N.W. 36th. St., Ste. 305, VIRGINIA GARDENS, Fl. 33166
Phone : (305)871-1530 , Fax : (305)871-1531
e-mail: tilteco@aol.com
EB-0006719
WALTER A. TILLIT Jr. P.E.
FLORIDA Lic. # 44167

DOUBLE & SINGLE SERIES LS18 OUTSWING COMMERCIAL STEEL DOOR W/SERIES "AS" 16 GAGE STEEL FRAME LOUVERED ASSEMBLIES.

DAYBAR INDUSTRIES LTD
50 WEST DRIVE, BRAMPTON, ON CANADA, L6T 2J4
TEL: 905 625-8000 FAX: 905 625-4204

REV. No	DESCRIPTION	DATE	REV. No	DESCRIPTION	DATE
1	OLD 12-013	03/27/15	3		
2			4		

F.R.L.
DRAWN BY
03/27/15
DATE
15-051
DRAWING No
SHEET 6 OF 19

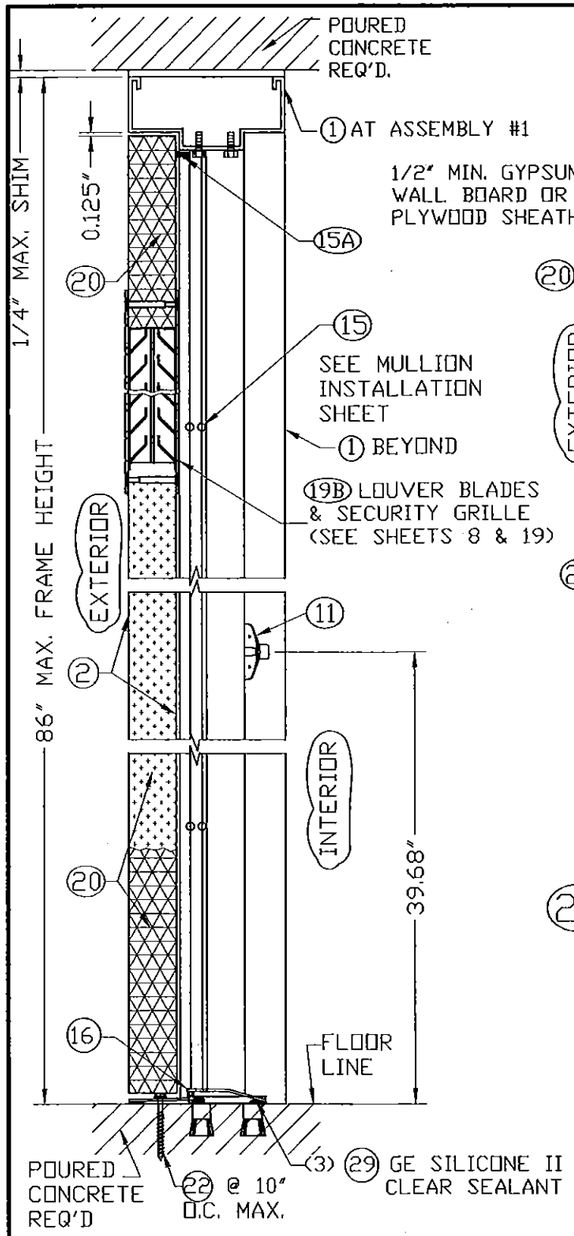

SECTION D-D

SINGLE DOOR DOES NOT NEED MULLION. LATCH ONTO REINFORCED JAMB

SCALE: 3/16"=1"

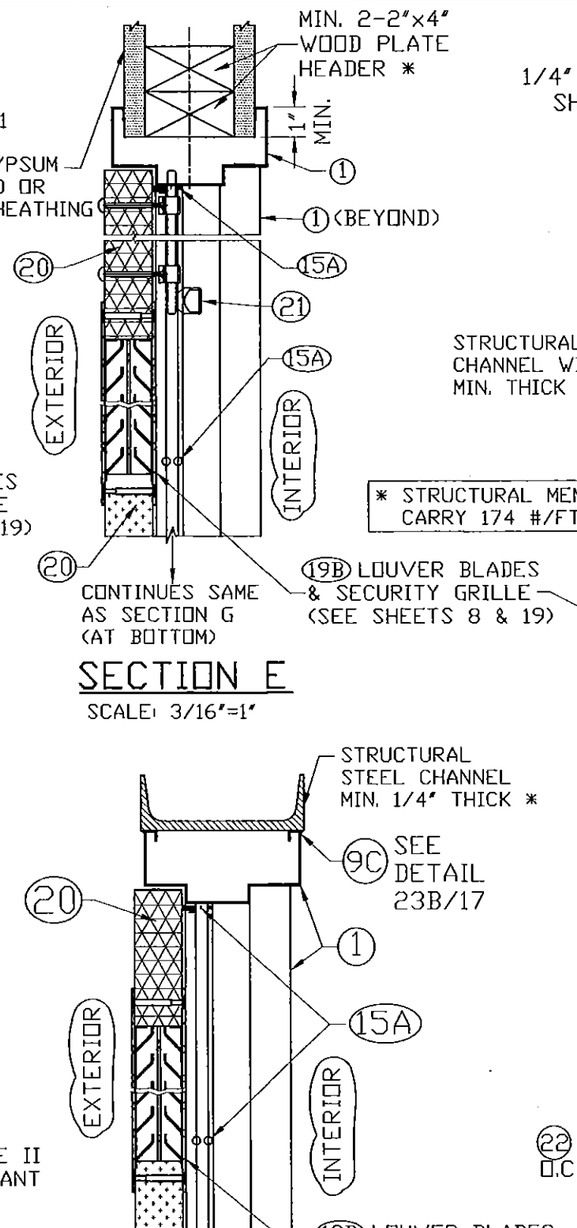

SECTION E

SCALE: 3/16"=1"

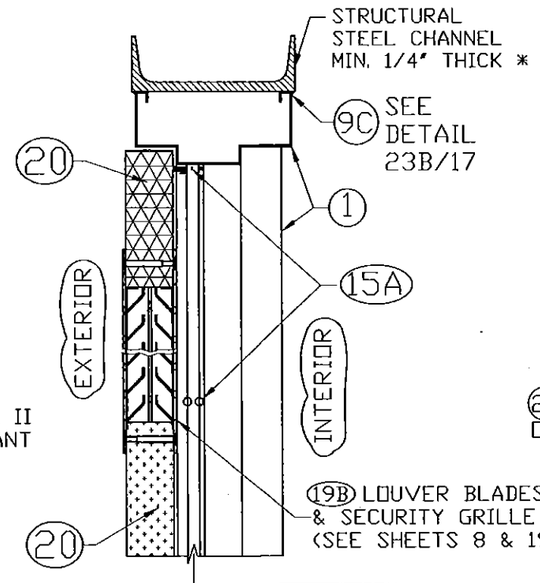

SECTION H

SCALE: 3/16"=1"

* STRUCTURAL MEMBER AT HEADER MUST BE DESIGNED TO CARRY 174 #/FT & BE REVIEWED BY BUILDING OFFICIAL

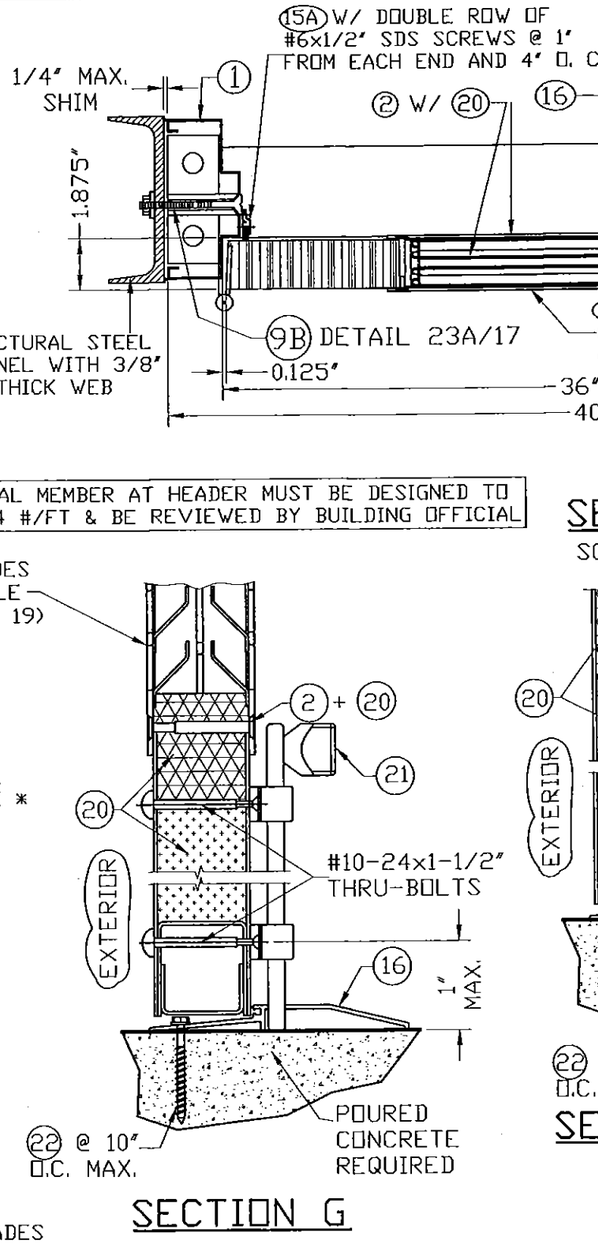

SECTION J-J

SCALE: 3/16"=1"

SECTION G

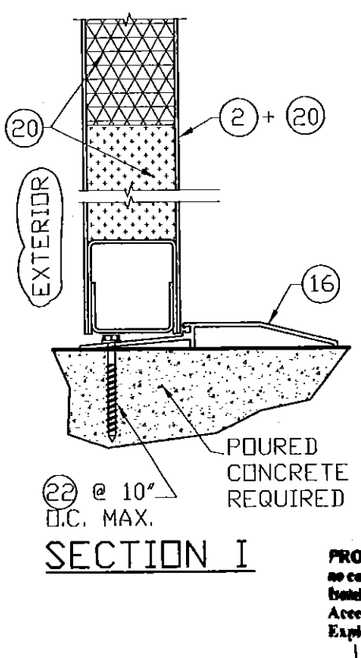

SECTION I

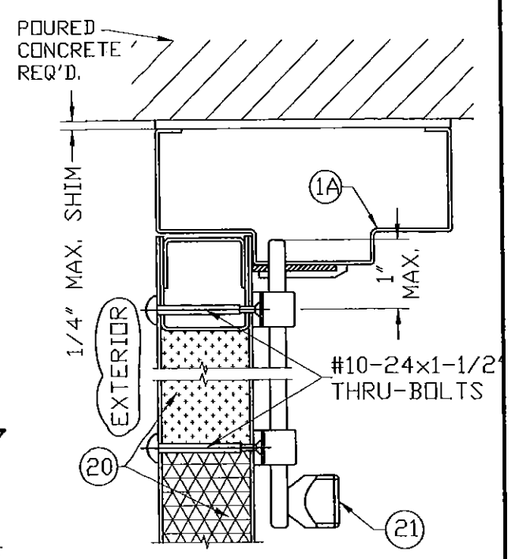

SECTION F

PRODUCT REVISED
as complying with the Florida Building Code
Acceptance No. 15-0427.01
Expiration Date 4/22/16
By [signature]
Miami-Dade Product Control

Florida Building Code (High Velocity Hurricane Zone)

MIAMI-DADE COUNTY

WALTER A. TILLIT JR. LICENSE No. 44167 STATE OF FLORIDA PROFESSIONAL ENGINEER

P.E. SEAL/SIGNATURE/DATE

© 2015 TILTECO INC. (ENGINEERING)

TILTECO INC.
TILLIT TESTING & ENGINEERING COMPANY
6355 N.W. 36th. St., Ste. 305, VIRGINIA GARDENS, Fl. 33166
Phone : (305)871-1530 , Fax : (305)871-1531
e-mail: tilteco@aol.com
EB-0006719
WALTER A. TILLIT Jr. P.E.
FLORIDA Lic. # 44167

DOUBLE & SINGLE SERIES LS18 OUTSWING COMMERCIAL STEEL DOOR W/SERIES "AS" 16 GAGE STEEL FRAME LOUVERED ASSEMBLIES.

F.R.L.

DRAWN BY

DAYBAR INDUSTRIES LTD
50 WEST DRIVE, BRAMPTON, ON CANADA, L6T 2J4
TEL: 905 625-8000 FAX: 905 625-4204

03/27/15 DATE

15-051 DRAWING No

REV. No	DESCRIPTION	DATE	REV. No	DESCRIPTION	DATE
1	OLD 12-013	03/27/15	3		
2			4		

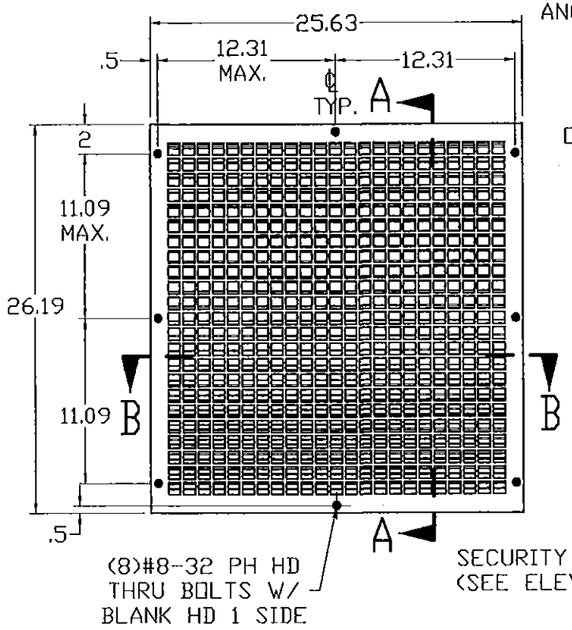

SECURITY GRILLE & LOUVER ASSEMBLY (ELEVATION)

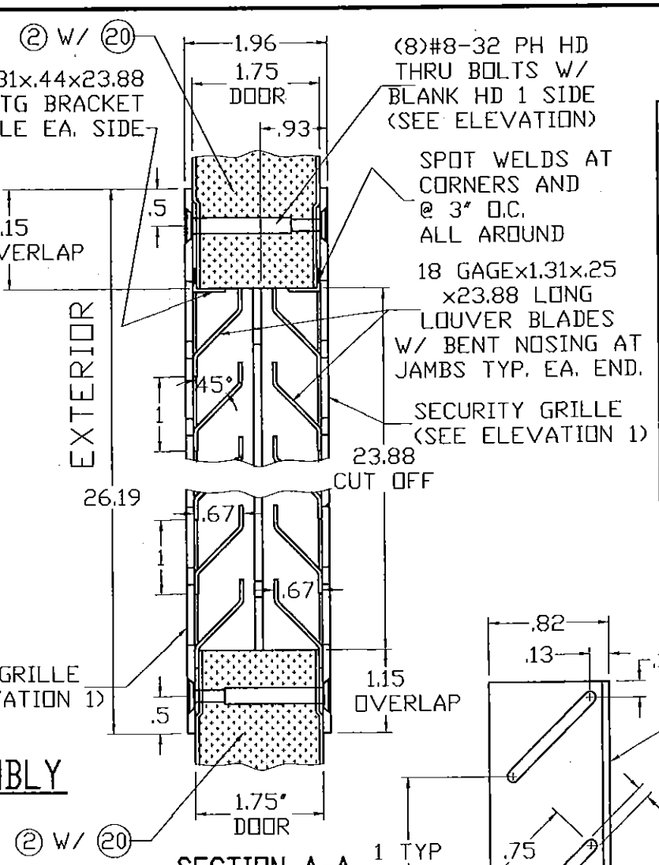

SECTION A-A

N.T.S.

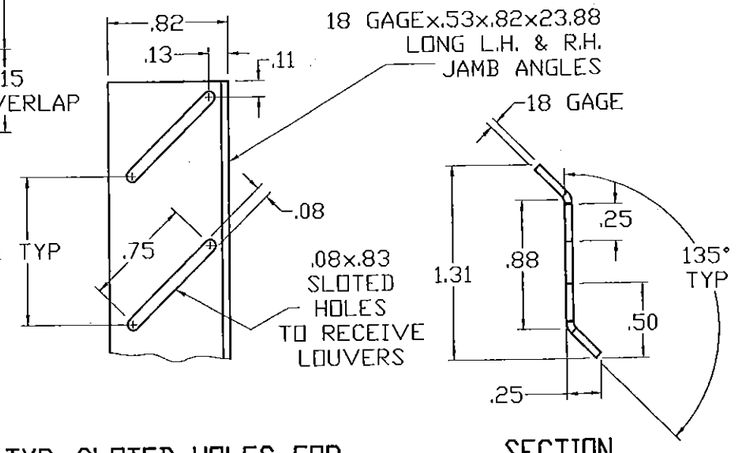

TYP. SLOTED HOLES FOR LOUVER BLADE @ JAMBS

SCALE 1 : 1

SECTION

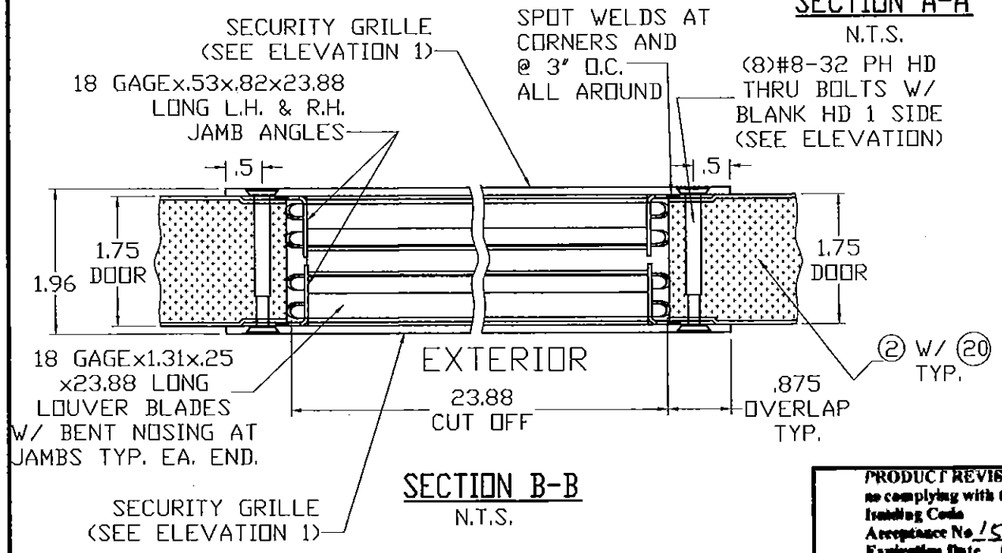

SECTION B-B

N.T.S.

AIR LOUVERS, INC. MODEL 1500-A LOUVER & SECURITY GRILLE SPECIFICATIONS

MODEL: #1500-A
MATERIAL: 18 GAUGE CRS FRAME (MIN. Fy=45 ksi) AND LOUVER BLADES; 12 GAUGE (MIN. Fy=45 ksi) CRS SECURITY GRILLE
CONSTRUCTION: MITERED AND WELDED CORNERS; SECURITY GRILLE ON INTERIOR AND EXTERIOR OF LOUVER WITH 13/16" SQUARE OPENING 1" ON CENTER.
FINISH: BAKED ON POWDER COAT.
FASTENERS: #8-32 PHILIPS HEAD THRU BOLTS WITH BLANK HEAD ONE SIDE.
FREE FLOW AREA: 40 % FREE AREA.

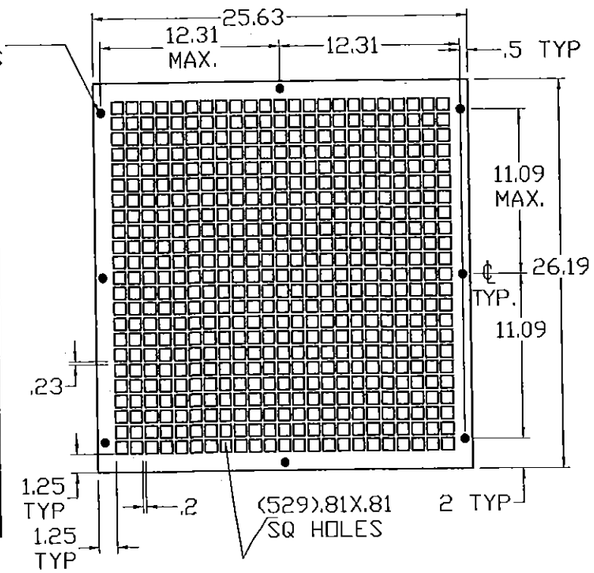

SECURITY GRILLE ELEVATION 1

.11 THICK

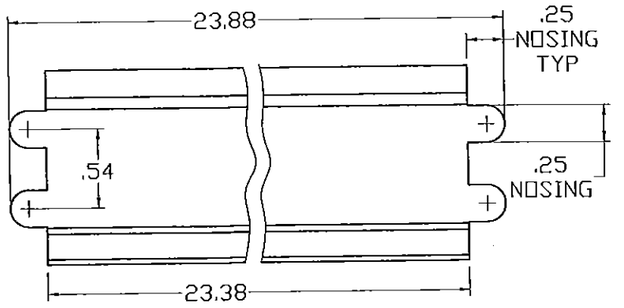

ELEVATION

TYP. LOUVER BLADE DETAIL

SCALE 1 : 1

(19B) MODEL 1500-A LOUVER 24"W X 24"H (MAX. 4 Ft² AREA) INVERTED "Y" BLADES C/W SECURITY GRILLE

NOTE: SEE MAX. A.S.D. DESIGN PRESSURE RATING ON SHEET 1
Florida Building Code (High Velocity Hurricane Zone)

PRODUCT REVISED
no complying with the Florida
Building Code
Acceptance No. 15-0427.01
Expiration Date 4/22/16
By
Miami-Dade Product Control

MIAMI-DADE COUNTY

WALTER A. TILLIT JR.
LICENSE
No. 44167
STATE OF
FLORIDA
PROFESSIONAL ENGINEER

SEAL/SIGNATURE/DATE

© 2015 TILTECO INC. (ENGINEERING)

TILTECO INC.
TILLIT TESTING & ENGINEERING COMPANY
6355 N.W. 36th. St., Ste. 305, VIRGINIA GARDENS, FL. 33166
Phone : (305)871-1530 . Fax : (305)871-1531
e-mail: liiteco@aol.com
EB-0006719
WALTER A. TILLIT Jr. P.E.
FLORIDA Lic. # 44167

DOUBLE & SINGLE SERIES LS18 OUTSWING COMMERCIAL STEEL DOOR W/SERIES "AS" 16 GAGE STEEL FRAME LOUVERED ASSEMBLIES.

DAYBAR INDUSTRIES LTD
50 WEST DRIVE, BRAMPTON, ON CANADA, L6T 2J4
TEL: 905 625-8000 FAX: 905 625-4204

REV. No	DESCRIPTION	DATE	REV. No	DESCRIPTION	DATE
1	OLD 12-013	03/27/15	3		
2			4		

F.R.L.
DRAWN BY
03/27/15
DATE
15-051
DRAWING No
SHEET 8 OF 19

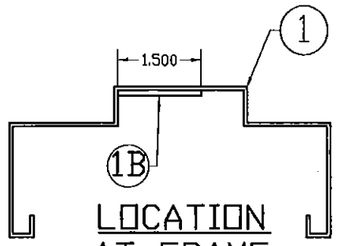

LOCATION AT FRAME

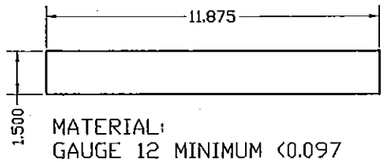

MATERIAL:
GAUGE 12 MINIMUM (0.097 THICK) GALVANNEAL, ATTACHED W/(2) LONG MIC WELDS ONE/END.

(1B) SURFACE STRIKE REINFORCING

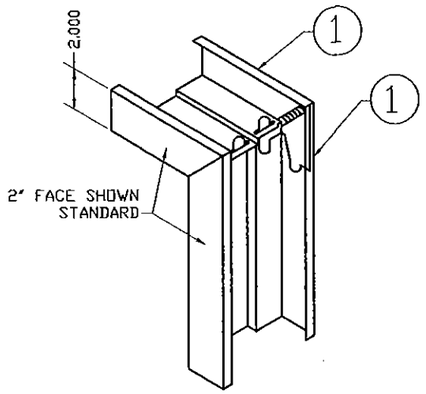

1. DIE MITERED CORNER CONT. WELDED INSIDE FACES & AT RETURNS
2. CAULK COMPLETE INSIDE CORNER WITH (29) GE SILICONE II

DETAIL 16 TYPICAL WELDED CORNER

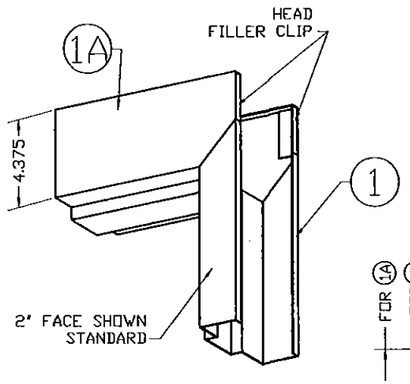

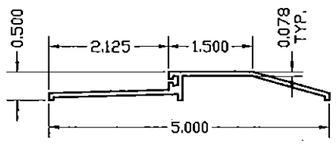

(16) EXTRUDED ALUMINUM THRESHOLD NGP #950NA

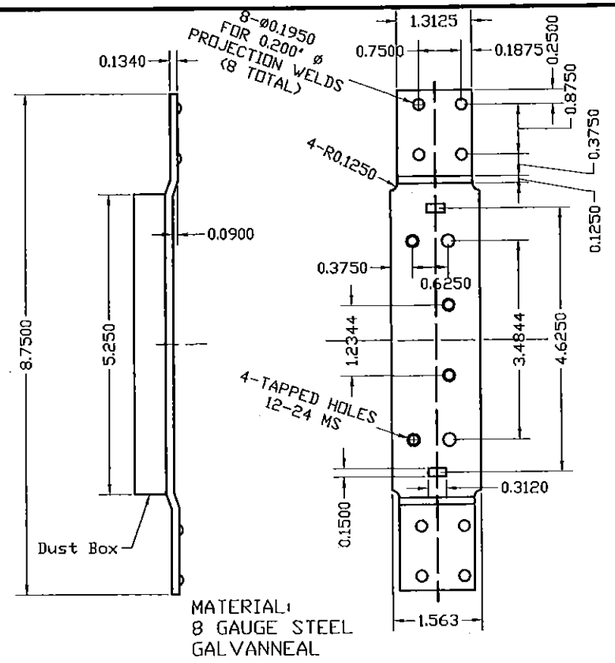

MATERIAL:
8 GAUGE STEEL GALVANNEAL

(3), (4) 4 1/2" FRAME DOOR HINGE REINFORCING DETAIL

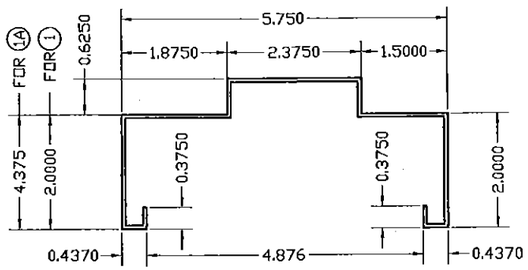

MATERIAL:
GAUGE 16 MINIMUM (.057) GALVANNEAL

(1) TYPICAL JAMB & HEAD SECTION

(1A) OPTIONAL HEAD SECTION

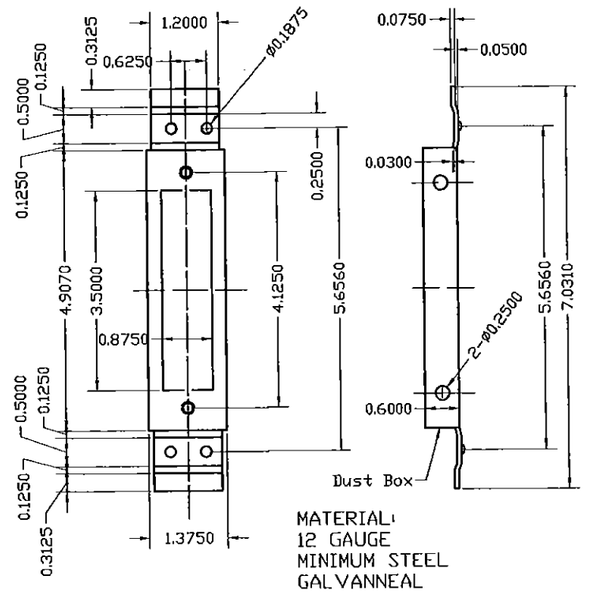

MATERIAL:
12 GAUGE MINIMUM STEEL GALVANNEAL

(5) 4 7/8" STRIKE REINFORCEMENT FOR FRAME DETAIL

ATTACHED W/(4) 3/16" Ø PROJECTION WELDS.

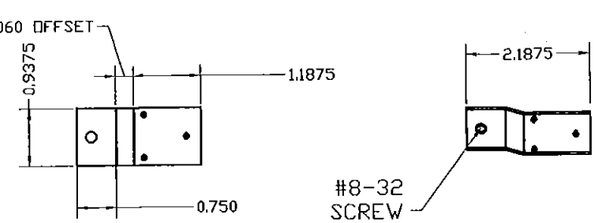

DEAD LOCK STRIKE TAB 14 GA (0.074) MIN

ATTACHED TO STRIKE JAMB W/ (3) 1/8" Ø PROJECTION WELDS.

PRODUCT REVISED
as complying with the Florida Building Code
Acceptance No 15-0427.01
Expiration Date 4/22/16
M. Ladra Product Control

FRAME SECTIONS AND REINFORCING DETAILS

Florida Building Code (High Velocity Hurricane Zone)

MIAMI-DADE COUNTY

WALTER A. TILLIT JR. LICENSE No. 44167 STATE OF FLORIDA PROFESSIONAL ENGINEER
P.E. SEAL / SIGNATURE / DATE

© 2015 TILTECO INC. (ENGINEERING)

TILTECO INC.
TILLIT TESTING & ENGINEERING COMPANY
6355 N.W. 36th. St. Ste. 305, VIRGINIA GARDENS, FL. 33166
Phone : (305)871-1530 . Fax : (305)871-1531
e-mail: tilteco@aol.com
EB-0006719
WALTER A. TILLIT Jr. P.E.
FLORIDA Lic. # 44167

DOUBLE & SINGLE SERIES LS18 OUTSWING COMMERCIAL STEEL DOOR W/SERIES "AS" 16 GAGE STEEL FRAME LOUVERED ASSEMBLIES.

DAYBAR INDUSTRIES LTD
50 WEST DRIVE, BRAMPTON, ON CANADA, L6T 2J4
TEL: 905 625-8000 FAX: 905 625-4204

REV. No	DESCRIPTION	DATE	REV. No	DESCRIPTION	DATE
1	OLD 12-013	03/27/15	3		
2			4		

F.R.L.
DRAWN BY
03/27/15 DATE
15-051 DRAWING No

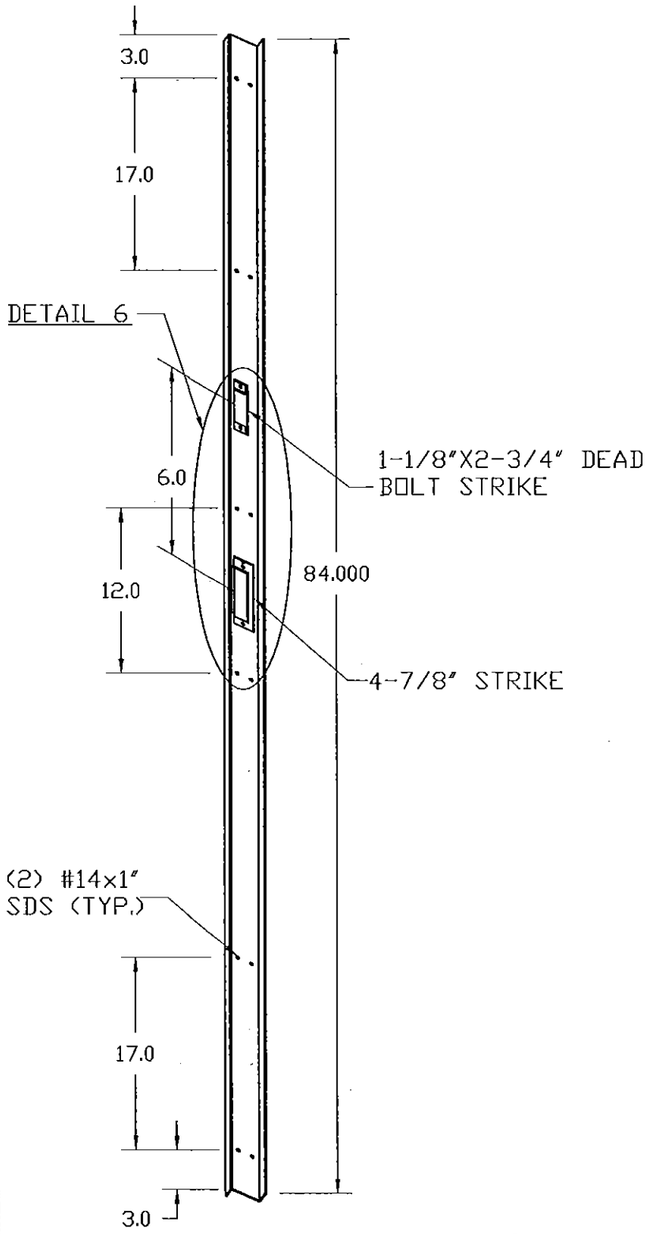

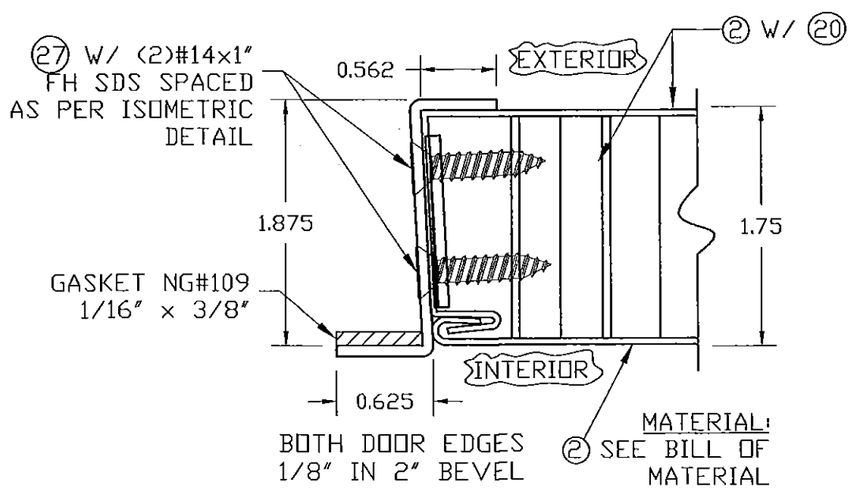

SECTION THRU ASTRAGAL AT DOUBLE DOOR

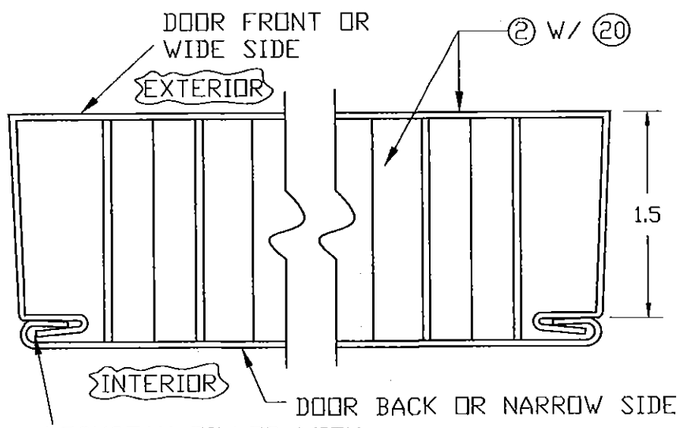

TYPICAL CROSS SECTION THRU DOOR

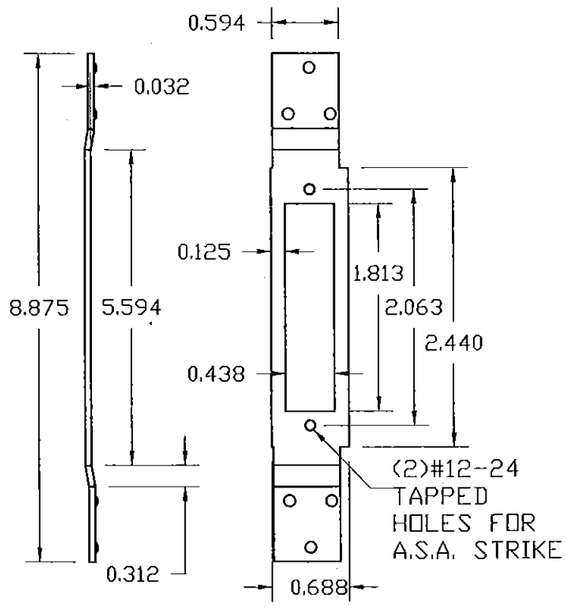

12 GAGE STEEL ASA 1299 STRIKE REINFORCEMENT FOR ASTRAGAL

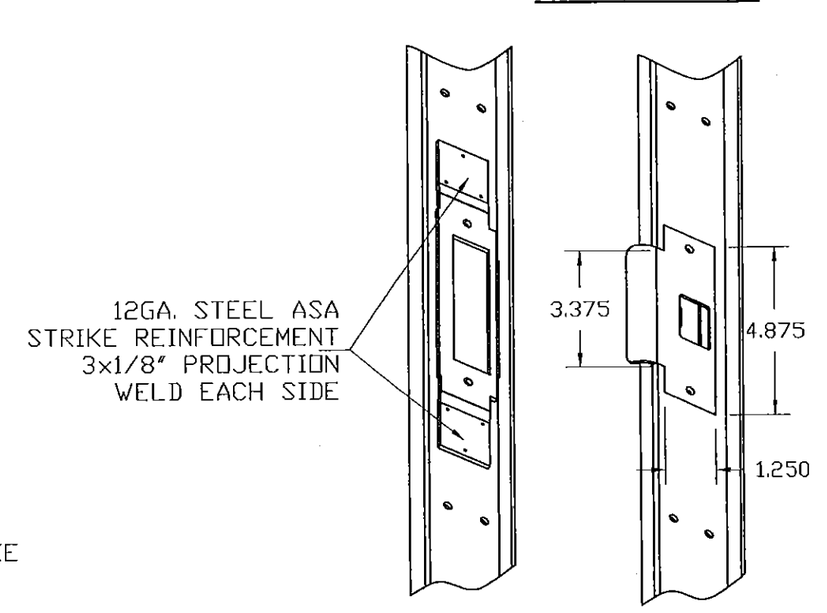

DETAIL 6

(27) "Z" ASTRAGAL ISOMETRIC DETAIL

MATERIAL:
0.075" THICK STEEL

PRODUCT REVISED
as complying with the Florida Building Code
Acceptance No 15-0427.01/
Expiration Date 4/22/16
Miami-Dade Product Control

Florida Building Code (High Velocity Hurricane Zone)

MIAMI-DADE COUNTY

WALTER A. TILLIT JR. LICENSE No. 44167 STATE OF FLORIDA PROFESSIONAL ENGINEER
4/7/15
P.E./SEAL/SIGNATURE/DATE

© 2015 TILTECO INC. (ENGINEERING)

TILTECO INC.
TILLIT TESTING & ENGINEERING COMPANY
6355 N.W. 36th. St., Ste. 305, VIRGINIA GARDENS, FL 33166
Phone : (305)871-1530 . Fax : (305)871-1531
e-mail: tlteco@aol.com
EB-0006719
WALTER A. TILLIT Jr. P.E.
FLORIDA Lic. # 44167

DOUBLE & SINGLE SERIES LS18 OUTSWING COMMERCIAL STEEL DOOR W/SERIES "AS" 16 GAGE STEEL FRAME LOUVERED ASSEMBLIES.

F.R.L.

DRAWN BY

DAYBAR INDUSTRIES LTD
50 WEST DRIVE, BRAMPTON, ON CANADA, L6T 2J4
TEL: 905 625-8000 FAX: 905 625-4204

03/27/15 DATE

15-051 DRAWING No

REV. No	DESCRIPTION	DATE	REV. No	DESCRIPTION	DATE
1	OLD 12-013	03/27/15	3		
2			4		

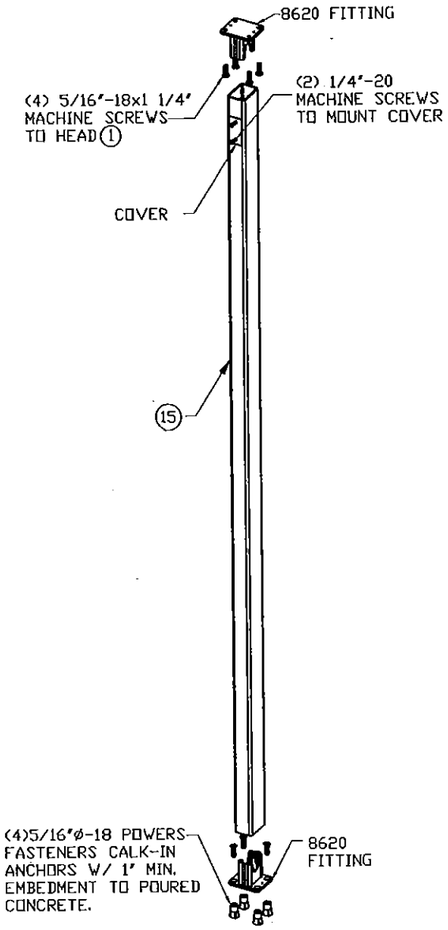

ISOMETRIC

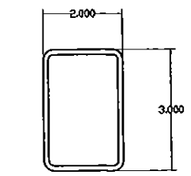

(15) MULLION BODY
0.125 THK. WALL
A 500 GRADE B STEEL

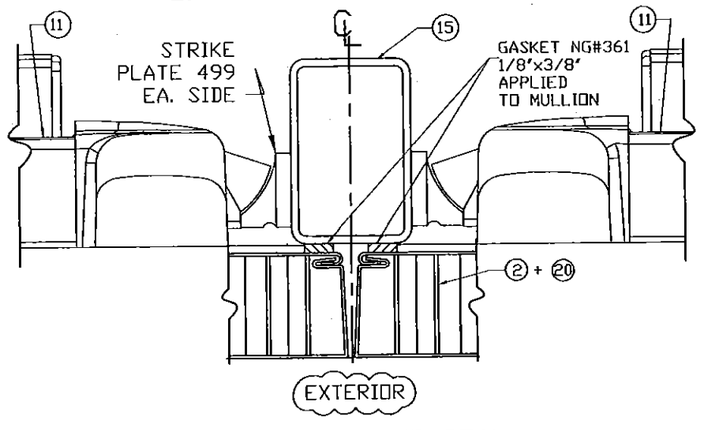

MULLION/DOOR SEAL

(15) VON DUPRIN SERIES 9954 (W/ 499 STRIKE PLATE) MULLION INSTALLATION

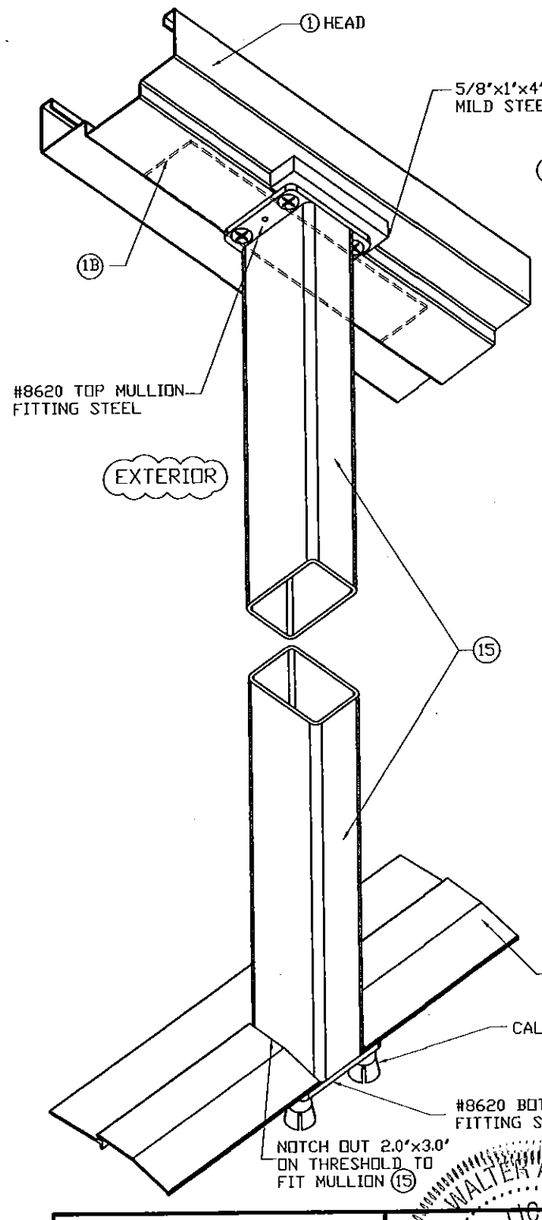

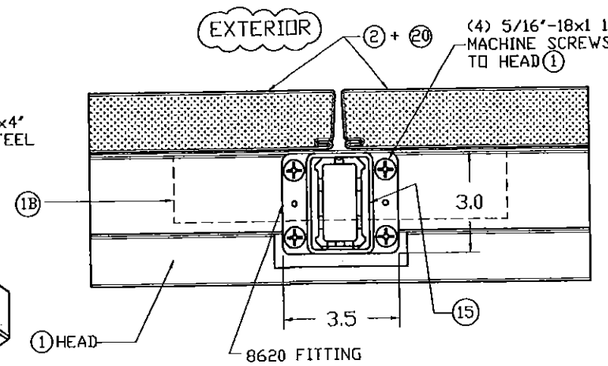

CONNECTION AT TOP (PLAN)

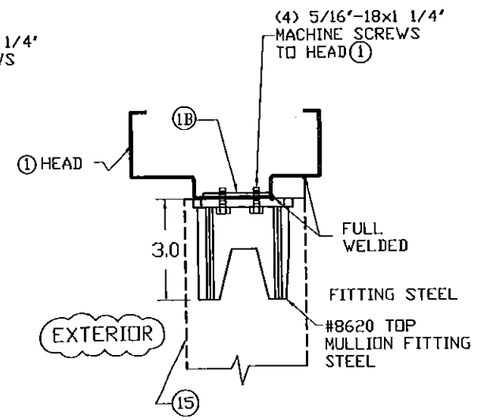

SECTION

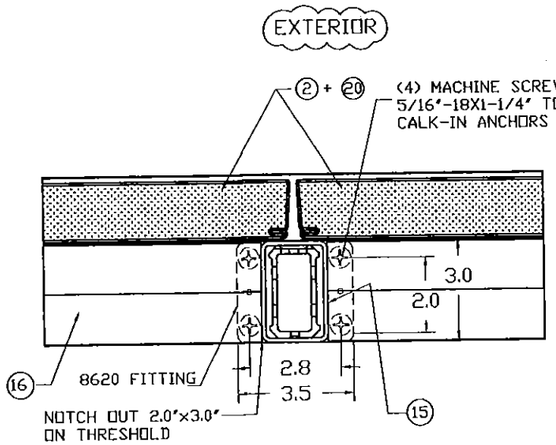

CONNECTION AT BOTTOM (PLAN)

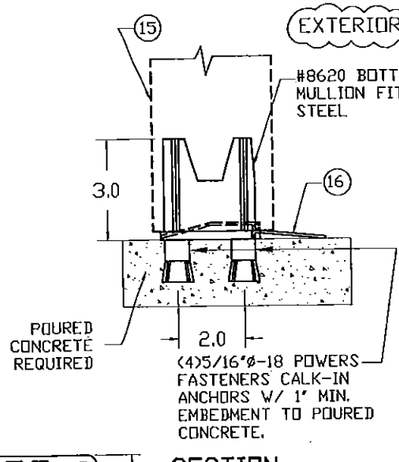

SECTION

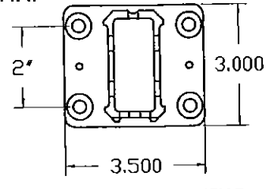

MULLION FITTING
8620 STEEL

PRODUCT REVISED
no complying with the Florida Building Code
Acceptance No 15-0427.01
Expiration Date 4/22/16
By [signature]
Miami-Dade Product Control

Florida Building Code (High Velocity Hurricane Zone)

MIAMI-DADE COUNTY

WALTER A. TILLIT JR. LICENSE No. 44167 STATE OF FLORIDA PROFESSIONAL ENGINEER
P.E. SEAL/SIGNATURE/DATE

© 2015 TILTECO INC. (ENGINEERING)

TILTECO INC.
TILLIT TESTING & ENGINEERING COMPANY
6355 N.W. 36th. St., Ste. 305, VIRGINIA GARDENS, Fl. 33166
Phone : (305)871-1530 . Fax : (305)871-1531
e-mail: tilteco@aol.com
EB-0006719
WALTER A. TILLIT Jr. P.E.
FLORIDA Lic. # 44167

DOUBLE & SINGLE SERIES LS18 OUTSWING COMMERCIAL STEEL DOOR W/SERIES "AS" 16 GAGE STEEL FRAME LOUVERED ASSEMBLIES.

DAYBAR INDUSTRIES LTD
50 WEST DRIVE, BRAMPTON, ON CANADA, L6T 2J4
TEL: 905 625-8000 FAX: 905 625-4204

REV. No	DESCRIPTION	DATE	REV. No	DESCRIPTION	DATE
1	OLD 12-013	03/27/15	3		
2			4		

F.R.L.
DRAWN BY
03/27/15
DATE
15-051
DRAWING No
SHEET 11 OF 19

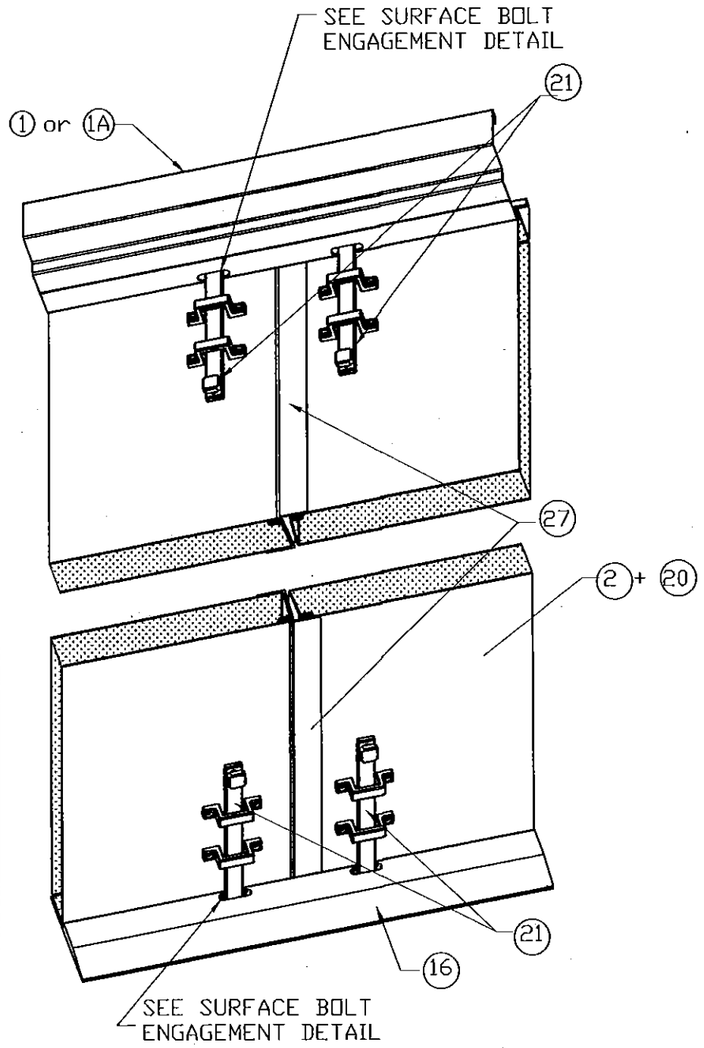

SURFACE BOLT INSTALLATION
AT DOOR W/ ASTRAGAL (INTERIOR VIEW)

NOTE:
SURFACE BOLT
MANUFACTURER-HAGER
MODEL #275D
MATERIAL-STEEL
FINISH US26D

(21) 8" #275D HAGER
SURFACE BOLT

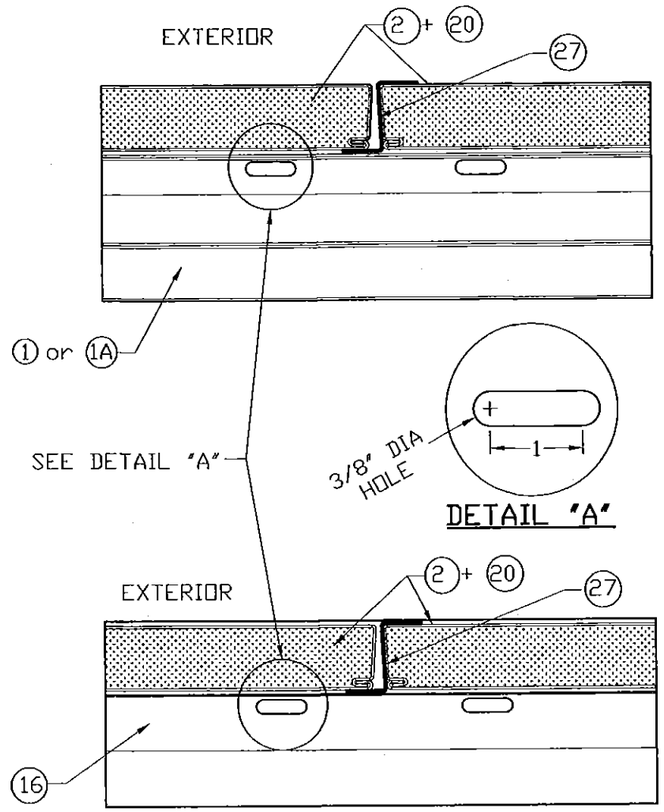

TYPICAL SURFACE BOLT ENGAGEMENT
DETAIL AT HEAD & SILL

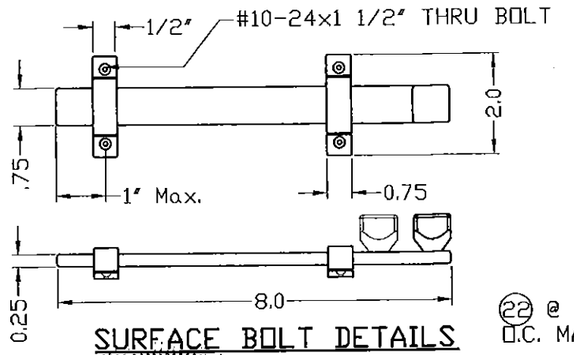

SURFACE BOLT DETAILS

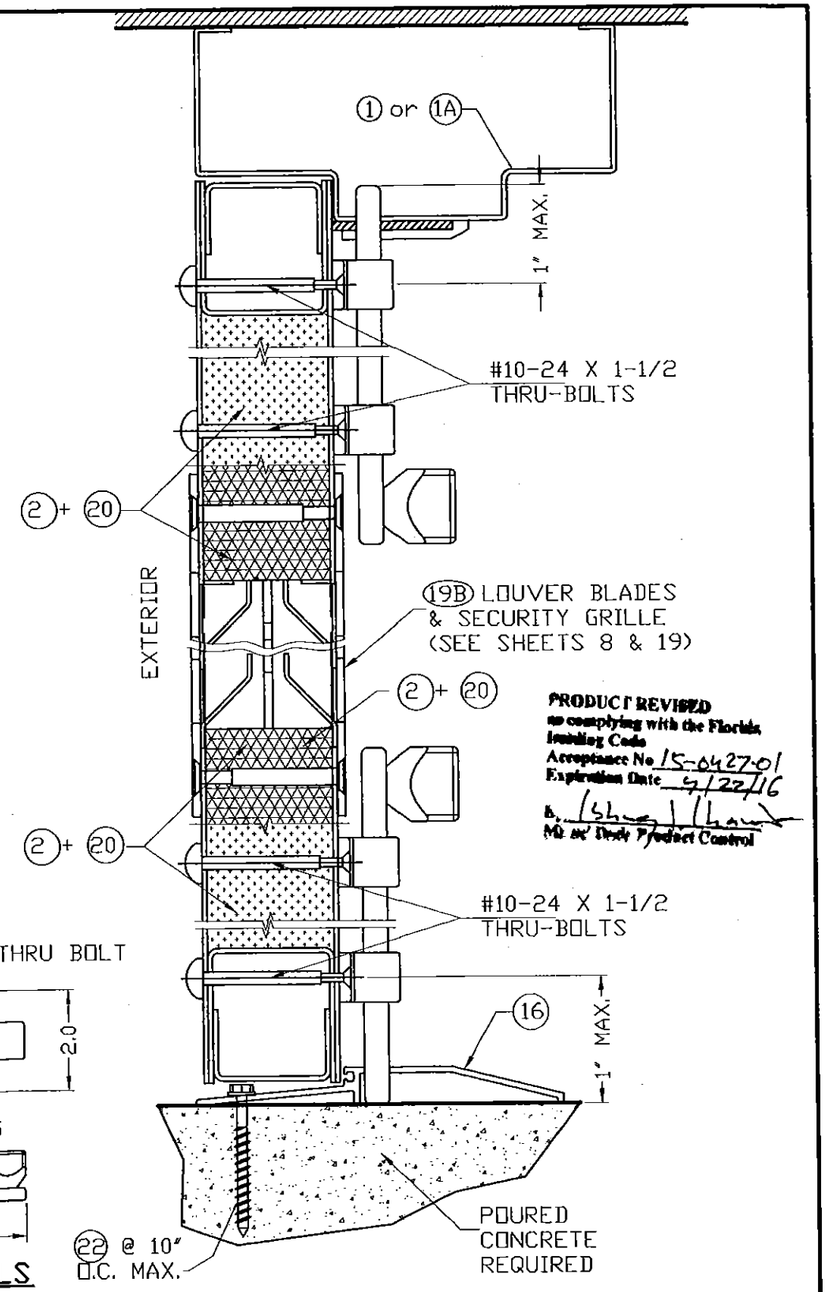

PRODUCT REVISED
as complying with the Florida
Building Code
Acceptance No. 15-0427.01
Expiration Date 4/22/16
By: [signature]
Miami-Dade Product Control

Florida Building Code (High Velocity Hurricane Zone)

MIAMI-DADE COUNTY

WALTER A. TILLUT JR. LICENSE No. 44167 STATE OF FLORIDA PROFESSIONAL ENGINEER
P.E. SEAL/SIGNATURE/DATE

© 2015 TILTECO INC. (ENGINEERING)

TILTECO INC.
TILLIT TESTING & ENGINEERING COMPANY
6355 N.W. 36th. St., Ste. 305, VIRGINIA GARDENS, FL. 33166
Phone : (305)871-1530 , Fax : (305)871-1531
e-mail: tilteco@aol.com
EB-0006719
WALTER A. TILLUT Jr. P.E.
FLORIDA Lic. # 44167

DOUBLE & SINGLE SERIES LS18 OUTSWING
COMMERCIAL STEEL DOOR W/SERIES "AS" 16 GAGE
STEEL FRAME LOUVERED ASSEMBLIES.

DAYBAR INDUSTRIES LTD
50 WEST DRIVE, BRAMPTON,
ON CANADA, L6T 2J4
TEL: 905 625-8000 FAX: 905 625-4204

REV. No	DESCRIPTION	DATE	REV. No	DESCRIPTION	DATE
1	OLD 12-013	03/27/15	3		
2			4		

F.R.L.
DRAWN BY
03/27/15
DATE
15-051
DRAWING No
SHEET 12 OF 19

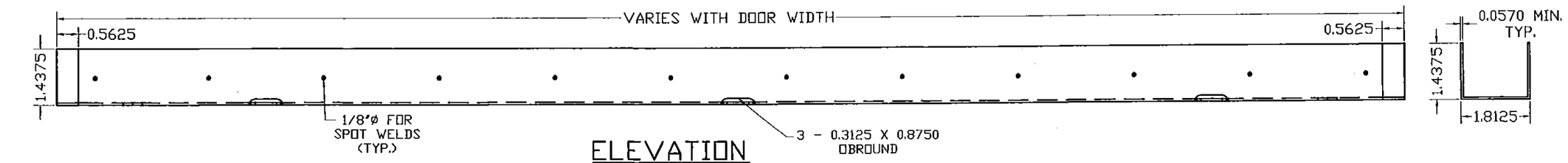

ELEVATION

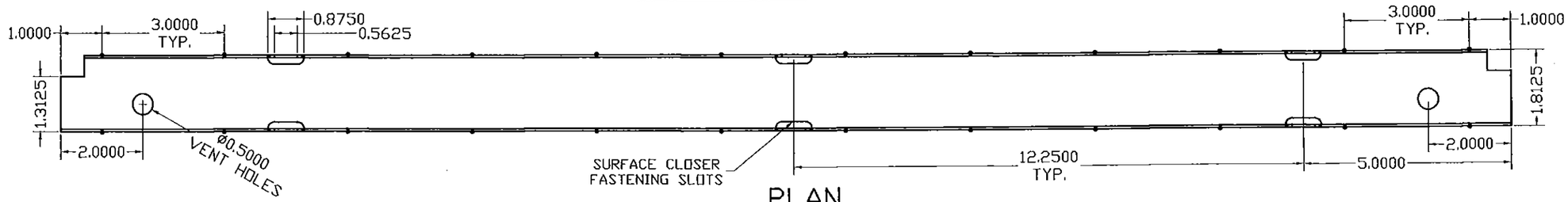

PLAN

(26) DOOR TOP AND BOTTOM TYPICAL END CHANNEL DETAIL

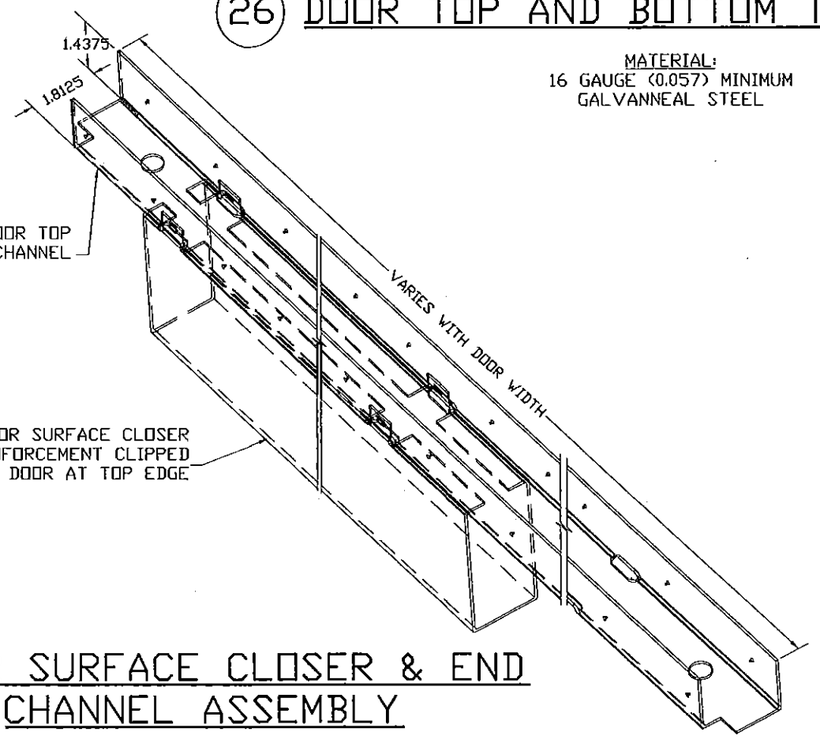

DOOR SURFACE CLOSER & END CHANNEL ASSEMBLY

MATERIAL:
16 GAUGE (0.057) MINIMUM
GALVANNEAL STEEL

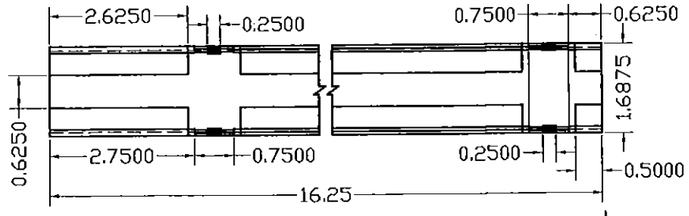

PLAN

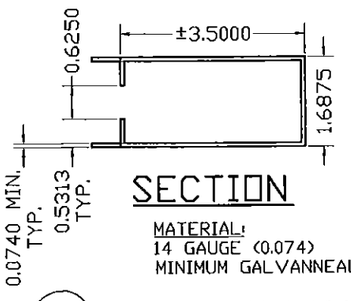

SECTION

MATERIAL:
14 GAUGE (0.074)
MINIMUM GALVANNEAL

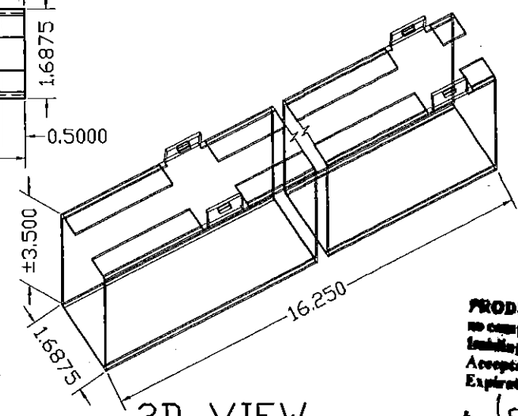

3D VIEW

LAMINATED TO EACH FACE OF DOOR
W/ CONTACT ADHESIVE (HELHIBOND 8326-1)
AT HINGE EDGE AND TOP END CHANNEL.

PRODUCT REVISED
no complying with the Florida Building Code
Acceptance No 15-6427.01
Expiration Date 4/22/16
By [signature]
Miami Dade Product Control

(25) DOOR SURFACE CLOSER REINFORCEMENT DETAIL

Florida Building Code (High Velocity Hurricane Zone)

MIAMI-DADE COUNTY

WALTER A. TILLIT JR. LICENSE No. 44167 STATE OF FLORIDA PROFESSIONAL ENGINEER

P.E. SEAL/SIGNATURE/DATE

© 2015 TILTECO INC. (ENGINEERING)

TILTECO INC.
TILLIT TESTING & ENGINEERING COMPANY
6355 N.W. 36th. St., Ste. 305, VIRGINIA GARDENS, FL 33166
Phone : (305)871-1530 . Fax : (305)871-1531
e-mail: tilteco@aol.com
EB-0006719
WALTER A. TILLIT Jr. P.E.
FLORIDA Lic. # 44167

DOUBLE & SINGLE SERIES LS18 OUTSWING COMMERCIAL STEEL DOOR W/SERIES "AS" 16 GAGE STEEL FRAME LOUVERED ASSEMBLIES.

DAYBAR INDUSTRIES LTD
50 WEST DRIVE, BRAMPTON, ON CANADA, L6T 2J4
TEL: 905 625-8000 FAX: 905 625-4204

REV. No	DESCRIPTION	DATE	REV. No	DESCRIPTION	DATE
1	OLD 12-013	03/27/15	3		
2			4		

F.R.L.
DRAWN BY
03/27/15
DATE
15-051
DRAWING No
SHEET 13 OF 19

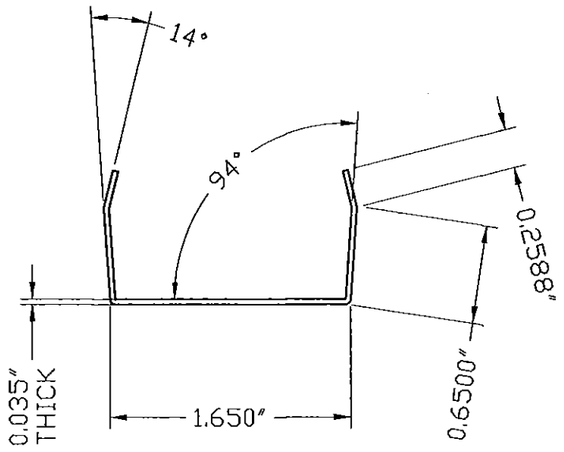

DETAIL A.
SNAP IN CHANNEL

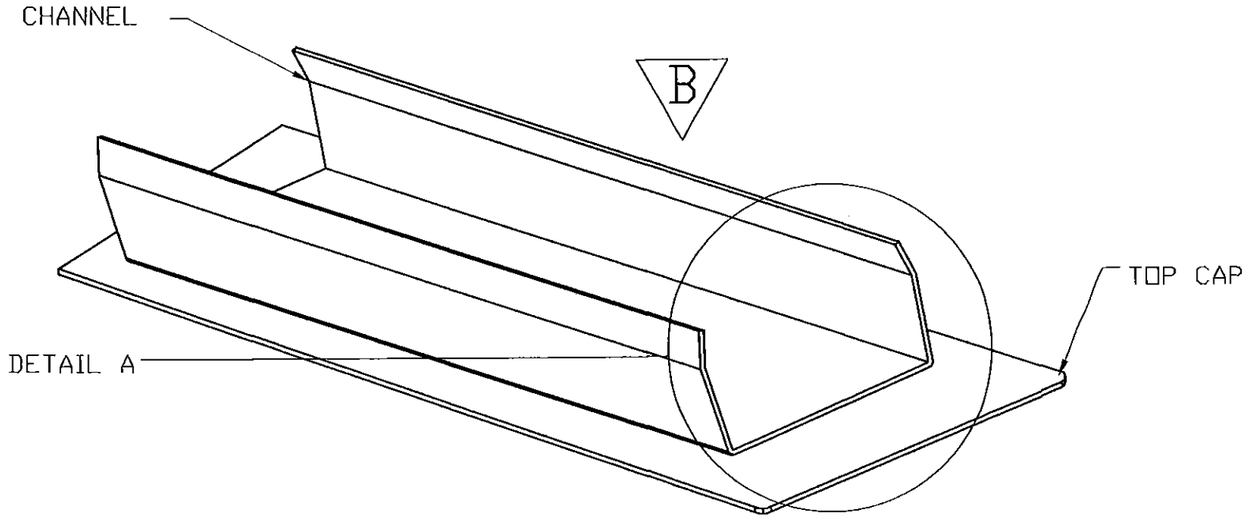

ASSEMBLY (ISOMETRIC)
(SNAP IN CHANNEL WITH TOP CAP)

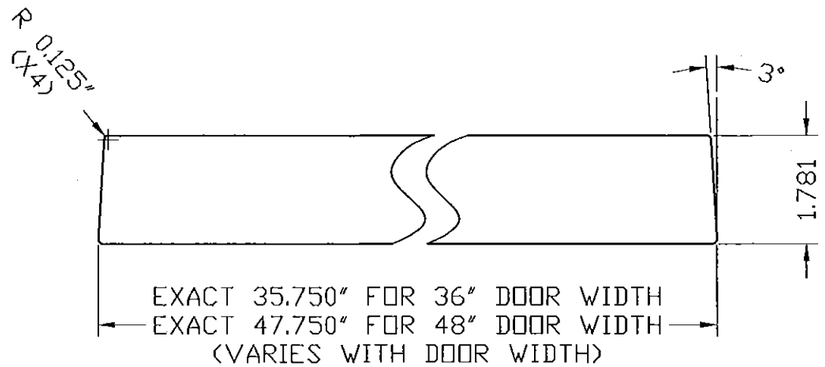

STANDARD TOP CAP

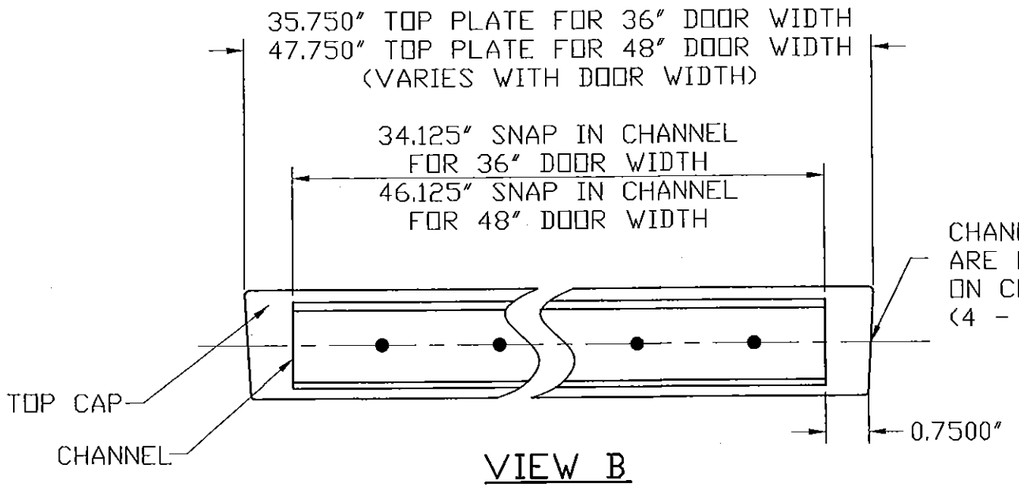

VIEW B

PRODUCT REVISED
no complying with the Florida Building Code
Acceptance No. 15-0427.01
Expiration Date 4/22/16
By Ishaq I. Chanda
Miami-Dade Product Control

(28) DOOR SNAP IN TOP CAP DETAIL

Florida Building Code (High Velocity Hurricane Zone)

MATERIAL: 20 GA GALVANNEAL STEEL FOR BOTH PCS. ASTM A-653, A-60

INSTALLATION OPTIONS:
(A) CAULK AND PRESSFIT
(B) CAULK, PRESSFIT AND TACK WELD

MIAMI-DADE COUNTY

WALTER A. TILLIT JR. LICENSE No. 44167 STATE OF FLORIDA PROFESSIONAL ENGINEER

P.E. SEAL/SIGNATURE/DATE

©2015 TILTECO INC. (ENGINEERING)

TILTECO INC.
TILLIT TESTING & ENGINEERING COMPANY
6355 N.W. 36th. St. Ste. 305, VIRGINIA GARDENS, Fl. 33166
Phone : (305)871-1530 . Fax : (305)871-1531
e-mail: tilteco@aol.com
EB-0006719
WALTER A. TILLIT Jr. P.E.
FLORIDA Lic. # 44167

DOUBLE & SINGLE SERIES LS18 OUTSWING COMMERCIAL STEEL DOOR W/SERIES "AS" 16 GAGE STEEL FRAME LOUVERED ASSEMBLIES.

F.R.L.

DAYBAR INDUSTRIES LTD
50 WEST DRIVE, BRAMPTON, ON CANADA, L6T 2J4
TEL: 905 625-8000 FAX: 905 625-4204

DRAWN BY

03/27/15
DATE

15-051
DRAWING No

REV. No	DESCRIPTION	DATE	REV. No	DESCRIPTION	DATE
1	OLD 12-013	03/27/15	3		
2			4		

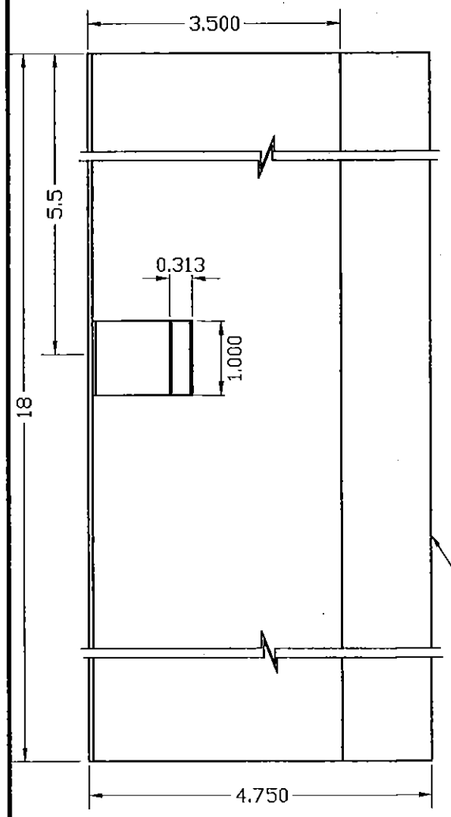

ELEVATION

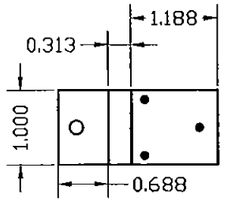

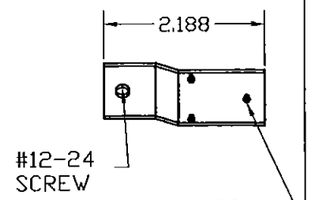

DOOR EDGE MOUNTING TAB

14 GA (0.074) MIN
STEEL

GAGE 14 (0.074) MINIMUM
RP REINFORCING SAME AS #86,
LESS LOCK CLIP & MOUNTING
TABS, GLUE W /CONTACT
ADHESIVE TO DOOR FACE

LOCK CLIP-18GA (0.045)
MIN. ONLY VALID FOR
ASSEMBLY WHERE
APPLICABLE

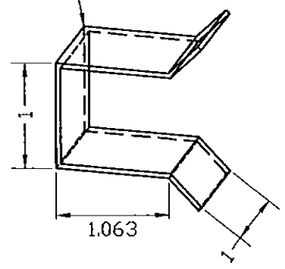

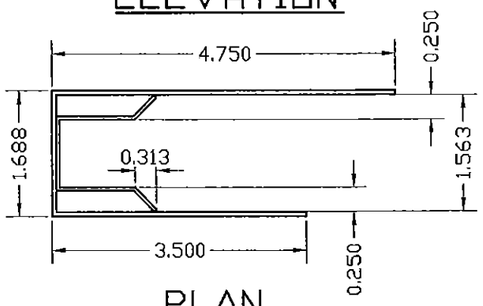

PLAN

MATERIAL:
ALL GALVANNEAL STEEL

(23) ANSI #A115.1 #86 MORTISE LOCK (12) /RIM PANIC (11) REINFORCING

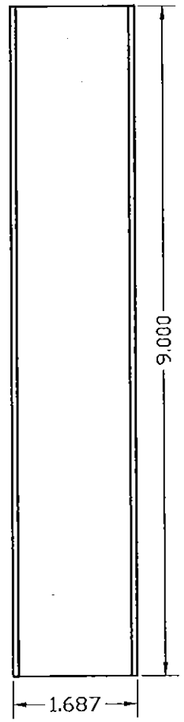

VIEW X

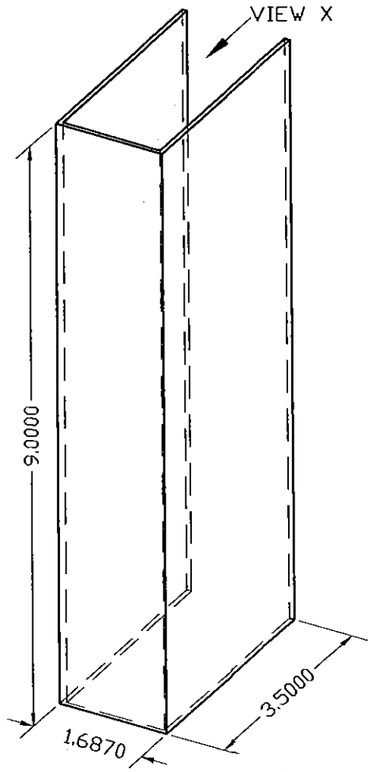

3D VIEW

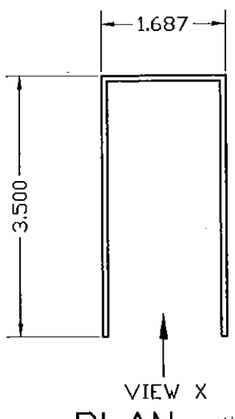

PLAN

MATERIAL:
14 GAUGE (0.074) MINIMUM
GALVANNEAL STEEL, GLUED TO
DOOR AT HEAD & SILL USING
HEMILBOND 8320-1 CONTACT
ADHESIVE.

(18) DOOR SURFACE BOLT REINFORCING DETAIL

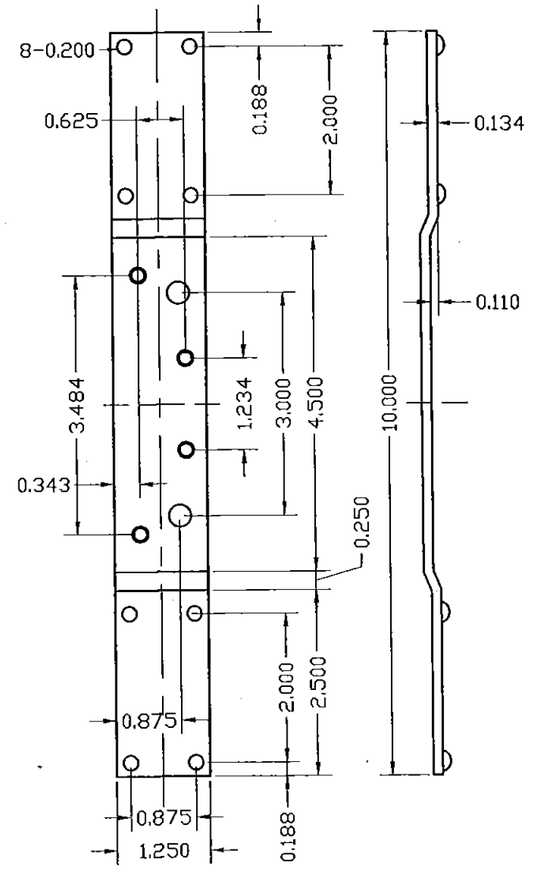

(17) 4 1/2" HINGE BAR REINFORCING FOR DOOR

MATERIAL:
8 GAUGE
GALVANNEAL STEEL

PRODUCT REVISED
as complying with the Florida
Building Code
Acceptance No 15-0427.01
Expiration Date 4/23/16
Miami-Dade Product Control

Florida Building Code (High Velocity Hurricane Zone)

MIAMI-DADE COUNTY

WALTER A. TILLIT JR. LICENSE No. 44167 STATE OF FLORIDA PROFESSIONAL ENGINEER

P.E. SEAL/SIGNATURE/DATE

© 2015 TILTECO INC. (ENGINEERING)

TILTECO INC.
TILLIT TESTING & ENGINEERING COMPANY
8355 N.W. 36th. St., Ste. 305, VIRGINIA GARDENS, FL. 33166
Phone : (305)871-1530 . Fax : (305)871-1531
e-mail: tilteco@aol.com
EB--0006719
WALTER A. TILLIT Jr. P.E.
FLORIDA Lic. # 44167

DOUBLE & SINGLE SERIES LS18 OUTSWING COMMERCIAL STEEL DOOR W/SERIES "AS" 16 GAGE STEEL FRAME LOUVERED ASSEMBLIES.

DAYBAR INDUSTRIES LTD
50 WEST DRIVE, BRAMPTON,
ON CANADA, L6T 2J4
TEL: 905 625-8000 FAX: 905 625-4204

REV. No	DESCRIPTION	DATE	REV. No	DESCRIPTION	DATE
1	OLD 12-013	03/27/15	3		
2			4		

F.R.L.
DRAWN BY

03/27/15
DATE

15-051
DRAWING No

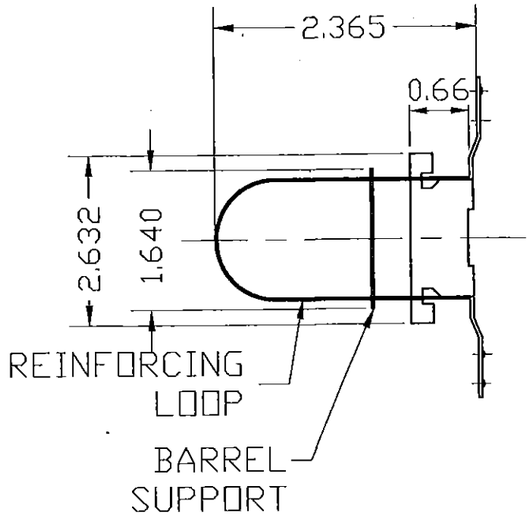

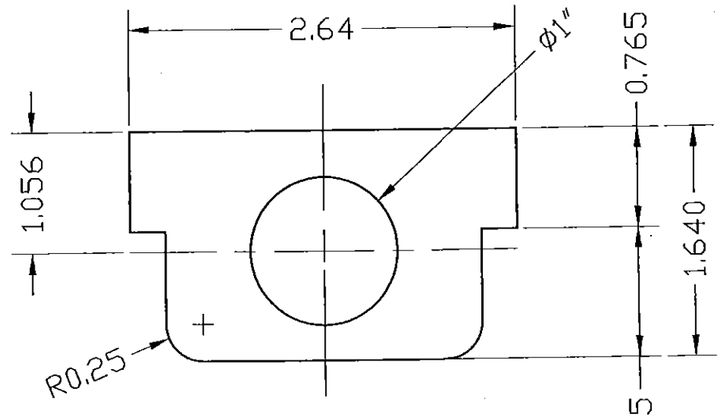

BARREL SUPPORT
MAT: 0.035 SATIN COAT

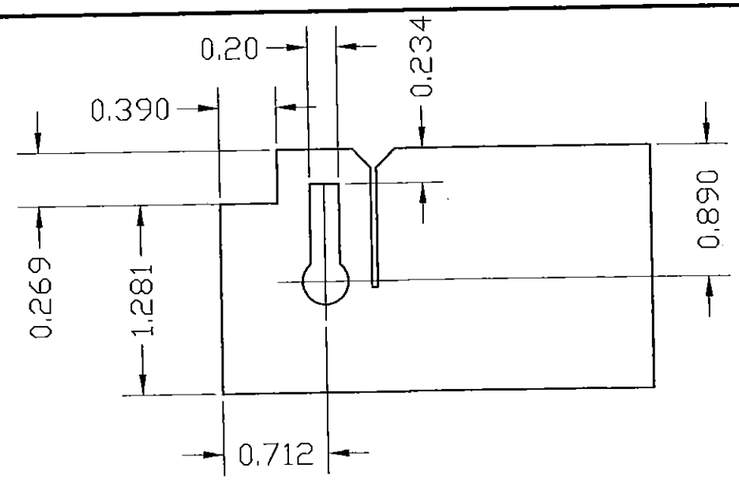

REINFORCING LOOP
MAT: 0.035 SATIN COAT

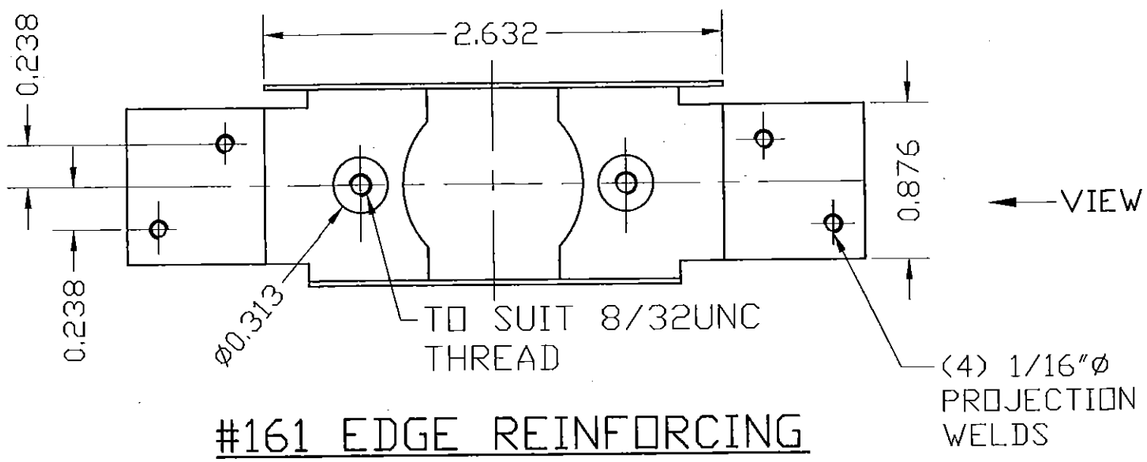

#161 EDGE REINFORCING

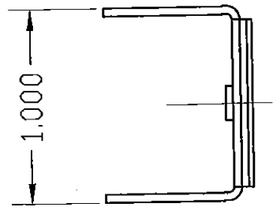

VIEW X

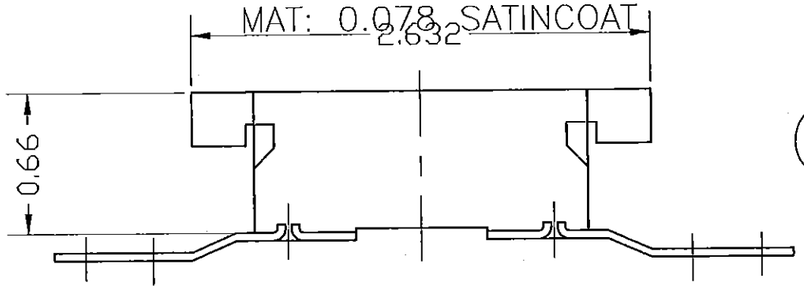

SECTION THROUGH EDGE REINFORCING

PRODUCT REVISED
as complying with the Florida
Building Code
Acceptance No 15-0427.01
Expiration Date 4/22/16
By [signature]
Miami Dade Product Control

(24) #161 CYLINDRICAL LOCK AND DEAD BOLT REINFORCEMENT DETAIL

Florida Building Code (High Velocity Hurricane Zone)

MIAMI-DADE COUNTY

WALTER A. TILLIT JR. LICENSE No. 44167 STATE OF FLORIDA PROFESSIONAL ENGINEER

P.E. SEAL/SIGNATURE/DATE

© 2015 TILTECO INC. (ENGINEERING)

TILTECO INC.
TILLIT TESTING & ENGINEERING COMPANY
6355 N.W. 36th. St., Ste. 305, VIRGINIA GARDENS, Fl. 33166
Phone : (305)871-1530 . Fax : (305)871-1531
e-mail: tilteco@aol.com
EB-0006719
WALTER A. TILLIT Jr. P.E.
FLORIDA Lic. # 44167

DOUBLE & SINGLE SERIES LS18 OUTSWING COMMERCIAL STEEL DOOR W/SERIES "AS" 16 GAGE STEEL FRAME LOUVERED ASSEMBLIES.

DAYBAR INDUSTRIES LTD
50 WEST DRIVE, BRAMPTON, ON CANADA, L6T 2J4
TEL: 905 625-8000 FAX: 905 625-4204

REV. No	DESCRIPTION	DATE	REV. No	DESCRIPTION	DATE
1	OLD 12-013	03/27/15	3		
2			4		

F.R.L.
DRAWN BY
03/27/15
DATE
15-051
DRAWING No
SHEET 16 OF 19

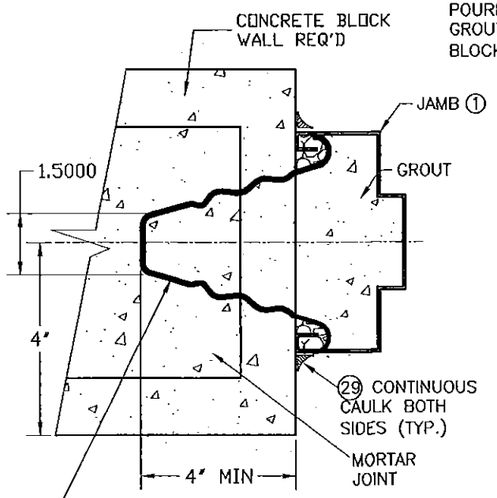

DETAIL #21
WIRE ANCHOR (6) INSTALLATION TO MASONRY WALLS

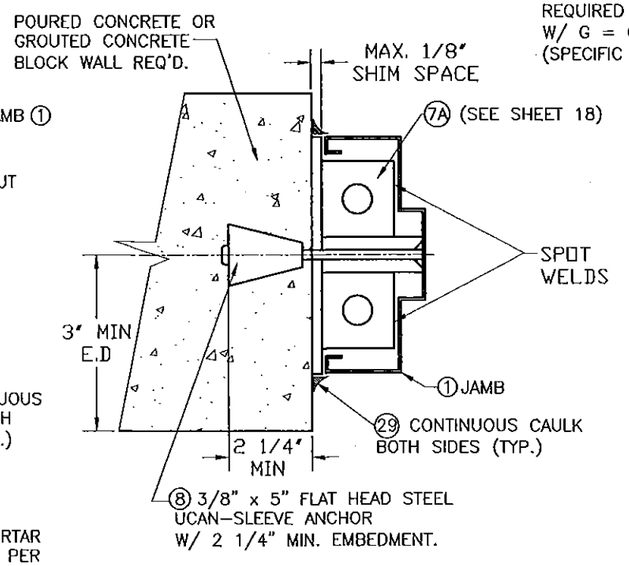

DETAIL #22
INSTALLATION OF UCAN SLEEVE ANCHORS (8) TO MASONRY WALLS

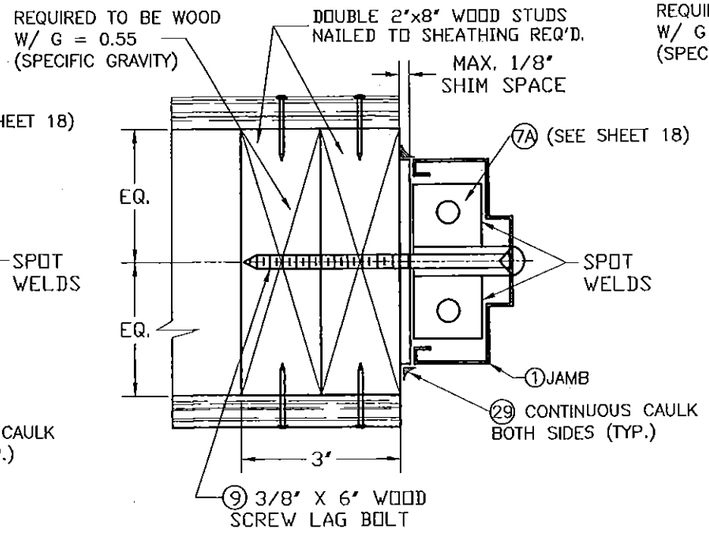

DETAIL #22A
INSTALLATION OF 3/8"ø LAG SCREW (9) TO WOOD FRAME WALLS

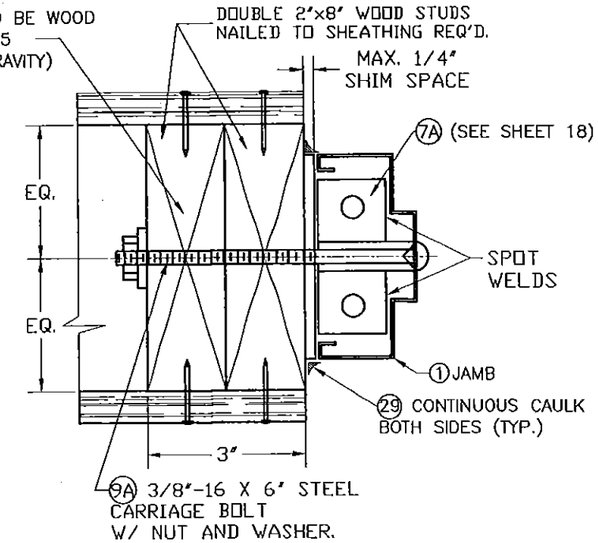

DETAIL #22B
INSTALLATION OF 3/8"ø CARRIAGE BOLT (9A) TO WOOD FRAME WALLS

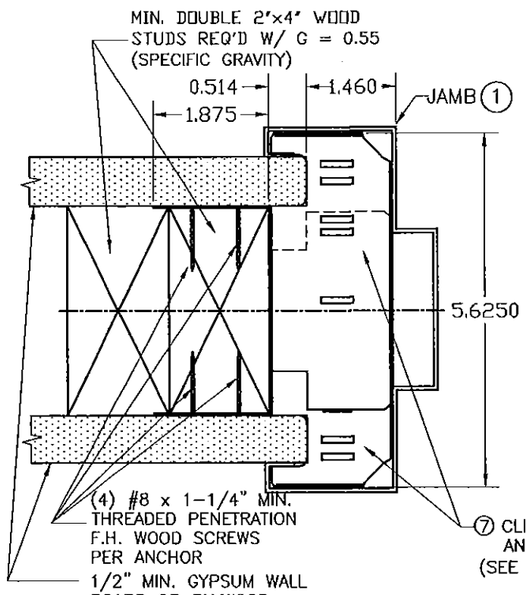

DETAIL #20
INSTALLATION OF 2 PIECE COMBINATION STUD ANCHOR (7) INTO WOOD FRAME WALLS

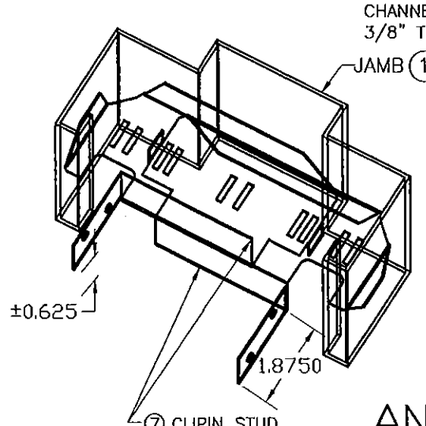

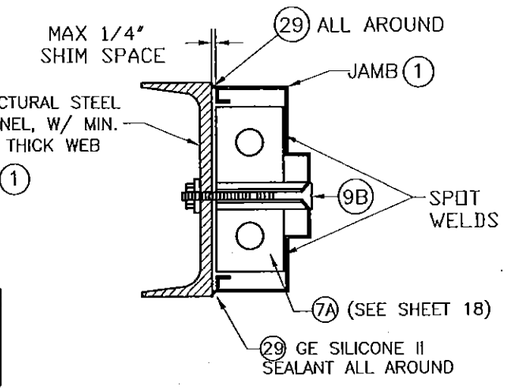

DETAIL #23A
INSTALLATION OF 3/8ø F.H. M.S. (9B) TO STEEL CHANNEL

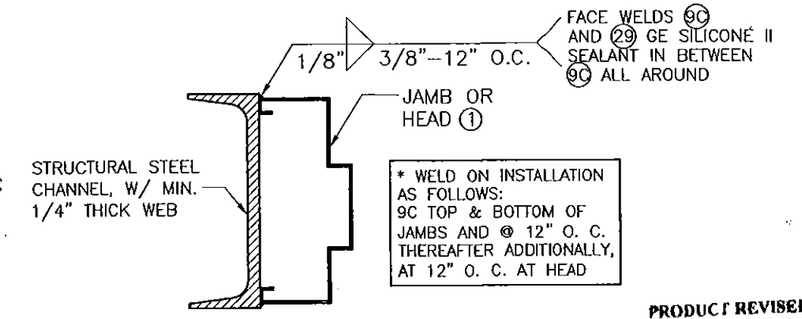

DETAIL #23B
INSTALLATION OF JAMB (1) TO STEEL CHANNEL THRU WELDING (9C)

PRODUCT REVISED as complying with the Florida Building Code
Acceptance No. 15-0427.01
Expiration Date 4/22/16
By: [signature]
Miami-Dade Product Control

ANCHOR DETAILS:
SEE SCHEDULE ON SHEET 18

Florida Building Code (High Velocity Hurricane Zone)

MIAMI-DADE COUNTY

PROFESSIONAL ENGINEER LICENSE No. 44167 STATE OF FLORIDA
P.E. SEAL/SIGNATURE/DATE

© 2015 TILTECO INC. (ENGINEERING)

TILTECO INC.
TILLIT TESTING & ENGINEERING COMPANY
6355 N.W. 36th. St., Ste. 305, VIRGINIA GARDENS, Fl. 33166
Phone : (305)871-1530 . Fax : (305)871-1531
e-mail: tilteco@aol.com
EB-0006719
WALTER A. TILLIT Jr. P.E.
FLORIDA Lic. # 44167

DOUBLE & SINGLE SERIES LS18 OUTSWING COMMERCIAL STEEL DOOR W/SERIES "AS" 16 GAGE STEEL FRAME LOUVERED ASSEMBLIES.

DAYBAR INDUSTRIES LTD
50 WEST DRIVE, BRAMPTON, ON CANADA, L6T 2J4
TEL: 905 625-8000 FAX: 905 625-4204

REV. No	DESCRIPTION	DATE	REV. No	DESCRIPTION	DATE
1	OLD 12-013	03/27/15	3		
2			4		

F.R.L.
DRAWN BY
03/27/15 DATE
15-051 DRAWING No
SHEET 17 OF 19

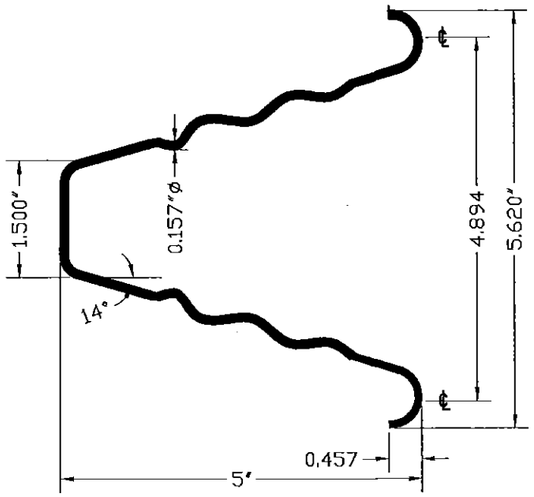

⑥ WIRE ANCHOR FOR DETAIL #21/17

STEEL WIRE ANCHORS
(0.157" DIA, 9 1/2" LONG) IN HORIZ.
Fu Min.=95.9 Ksi, Fy Min.=40.2 Ksi

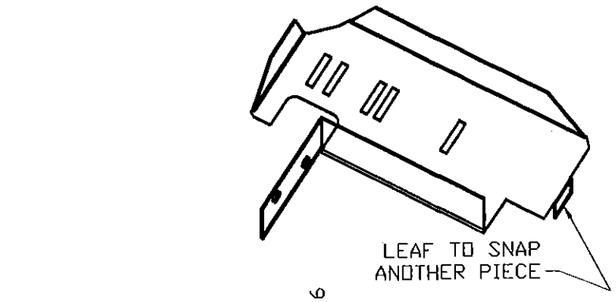

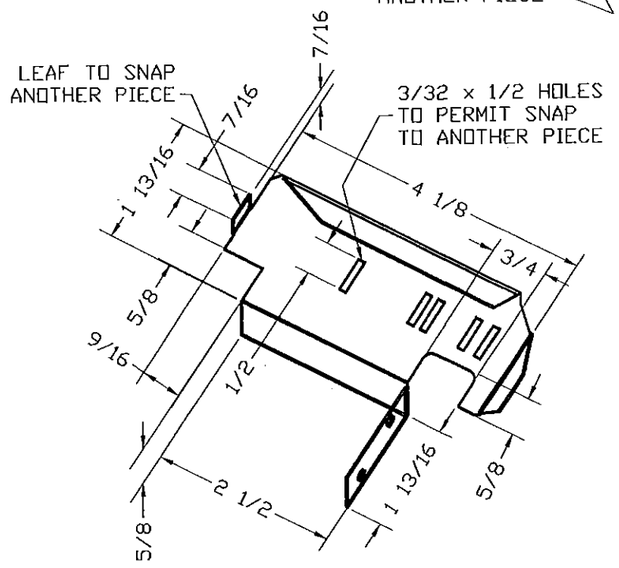

⑦ 2 PIECES COMBINATION STUD ANCHOR FOR DETAIL #20/17

CLIPIN STUD ANCHOR MATERIAL:
GAUGE 20 (0.035) ASTM A-653,
A-60 GALVANNEALED STEEL.

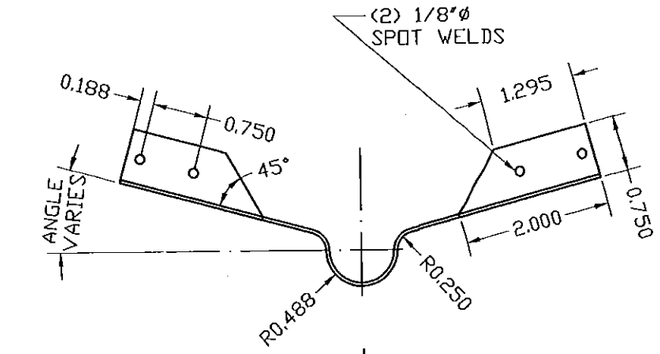

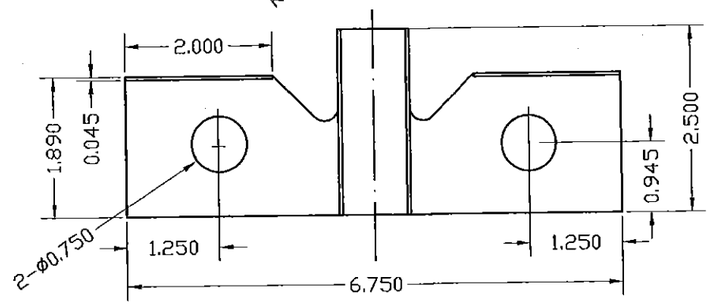

7A EMA BUTTERFLY ANCHOR (PART #PT1-008) FOR DETAILS 22/17, 22A/1722B/17 & 23A/17

MATERIAL: 18 GA SATIN COAT

PRODUCT REVISED
as complying with the Florida
Building Code
Acceptance No. 15-0427.01
Expiration Date 4/22/16
By
MIAMI-DADE Product Control

Florida Building Code (High Velocity Hurricane Zone)

MIAMI-DADE COUNTY

WALTER A. TILLIT JR. LICENSE No. 44167 STATE OF FLORIDA PROFESSIONAL ENGINEER
SEAL/SIGNATURE/DATE

© 2015 TILTECO INC. (ENGINEERING)

TILTECO INC.
TILLIT TESTING & ENGINEERING COMPANY
6355 N.W. 36th. St. Ste. 305, VIRGINIA GARDENS, FL. 33166
Phone : (305)871-1530 . Fax : (305)871-1531
e-mail: tilteco@aol.com
EB-0006719
WALTER A. TILLIT Jr. P.E.
FLORIDA Lic. # 44167

DOUBLE & SINGLE SERIES LS18 OUTSWING COMMERCIAL STEEL DOOR W/SERIES "AS" 16 GAGE STEEL FRAME LOUVERED ASSEMBLIES.

DAYBAR INDUSTRIES LTD
50 WEST DRIVE, BRAMPTON,
ON CANADA, L6T 2J4
TEL: 905 625-8000 FAX: 905 625-4204

REV. No	DESCRIPTION	DATE	REV. No	DESCRIPTION	DATE
1	OLD 12-013	03/27/15	3		
2			4		

F.R.L.
DRAWN BY
03/27/15
DATE
15-051
DRAWING No
SHEET 18 OF 19

BILL OF MATERIALS:

ITEM	QTY	DESCRIPTION	MATERIAL	SIZE AND SPEC'S
1	1	16 GAUGE JAMB/ HEAD FRAME SERIES 'AS'	16 GAUGE .058 MINIMUM. ALL COMPONENTS OF THIS ITEM, i.e., HEAD, JAMBS, REINFORCEMENTS AND ANCHORS ARE COMMERCIAL GALVANIZED STEEL (TYPE B), ASTM A653/A653M, COATING DESIGNATION A40, KNOWN COMMERCIALLY AS PAINTABLE GALVANNEAL W/ MIN. TENSILE STRENGTH 52 KSI, MIN. YIELD STRENGTH 45 KSI, ELONGATION 40%.	5 3/4" DEPTH X 2" FACE X .058" MIN THICK (SEE SHEET 9)
1A	1	16 GAUGE OPTIONAL HEAD FRAME SERIES 'AS'	SAME AS ITEM 1	5 3/4" DEPTH X 4 3/8" FACE X .058" MIN THICK (SEE SHEET 9)
1B	1	SURFACE STRIKE REINFORCING	12 GAGE GALVANNEAL STEEL	12 GAGE (0.097" MIN.) x 1.500" x 11.875" LONG, SEE DETAIL ON SHEET 9.
2	1	18 GAUGE FLUSH/EMBOSSED DOOR COMMERCIAL W/ CORE (20)	18 GAUGE .045 MINIMUM. ALL COMPONENTS OF THIS ITEM, i.e., FACE SHEETS, INTERNAL COMPONENTS AND REINFORCEMENTS ARE GALVANIZED STEEL CONFORMING TO ASTM A924, TO ASTM A653/A653M, COMMERCIAL STEEL (TYPE B), COATING DESIGNATION A40, KNOWN COMMERCIALLY AS PAINTABLE GALVANNEAL W/TENSILE STRENGTH 60 KSI, AND YIELD STRENGTH 45 KSI, ELONGATION 40%.	1 3/4" THICK X (.045 MIN), SEE SHEET 6.
3	3	8 GAUGE DOOR HINGE REINFORCING	STEEL	1 1/4" X 10" X 8 GAUGE
4	3	8 GAUGE FRAME HINGE REINFORCING	STEEL	1 1/2" X 8 3/4" X 8 GAUGE
5	1	STRIKE REINFORCING (FRAME)	STEEL	1 3/8" X 7 5/16" X 14 GAUGE (.072 MIN)
6	AS REQ'D	WIRE MASONRY FRAME ANCHORS	STEEL W/ MIN. YIELD STRENGTH = 40.2Ksi AND MIN. TENSILE STRENGTH = 95.9 Ksi	9 1/2" LONG X 0.157" MIN. DIAMETER.
7	AS REQ'D	CLIPIN STUD ANCHORS (2 PIECE COMBINATION)	STEEL, ASTM A-653, A-60 GALVANNEAL	1 7/8" X 5 5/8" X 20 GAUGE (.035 MIN) W/ (4)#8 X 1 5/8" WOOD SCREWS
7A	AS REQ'D	EMA BUTTERFLY ANCHOR (PART #PT1-008)	STEEL	18 GAUGE STEEL SATIN COAT.
8	AS REQ'D	EMA ANCHOR BOLTS	STEEL, W/ Fy = 45,000 psi.	3/8" X 5" STEEL UCAN-SLEEVE ANCHOR
9	AS REQ'D	WOOD SCREW LAG BOLT	STEEL, W/ Fy = 45,000 psi.	3/8" x 6"
9A	AS REQ'D	CARRIAGE ANCHOR BOLT	STEEL, W/ Fy = 45,000 psi.	3/8"-16 X 6" STEEL CARRIAGE BOLT C/W NUT AND WASHER, PER ASTM A-307
9B	AS REQ'D	F.H. M.S. TO STEEL CHANNEL THROUGH BOLTING	STEEL, W/ Fy = 45,000 psi.	3/8" X 3 1/2" STEEL F.H. M.S., PER ASTM A-307
9C	AS REQ'D	STEEL CHANNEL WELDING	STEEL, E60XX ELECTRODE	WELD ON INSTALLATION, MIN. 1/8"x3/8" STITCH WELD
10	3	HINGES-HAGER BB1279, BB1168HD OR STANLEY FBB179, FBB168	STEEL	4.5" X 4.5" STANDARD WEIGHT (.134 THICK), ATTACHED TO FRAME W/(4) 12-24x1/2" FHMS.
11	1	RIM EXIT: VON DUPRIN 98/99L X CYC X TRIM	AS PER MANUFACTURER'S CATALOG	RIM EXIT ATTACHED TO DOOR W/(4) 1/4-20x1" MS.
12	1	MORTISE LOCK: SCHALGE-L9000 SERIES W/ DEAD BOLT	AS PER MANUFACTURER'S CATALOG	MORTISE LOCK ATTACHED W/(2) #12-24x1/2" SREWS.
13	1	CYLINDRICAL LOCK: - SCHLAGE D SERIES	AS PER MANUFACTURER'S CATALOG	ATTACHED TO STRIKE PLATE W/(2) 12-24x1/2" SCREWS.
14	1	DEAD BOLT: - SCHLAGE B SERIES	AS PER MANUFACTURER'S CATALOG	ATTACHED TO STRIKE PLATE W/(2) 8-32x1/2" SCREWS
15	1	VON DUPRIN #9954 REMOVABLE MULLION	0.125" THICK A 500 GRADE B STEEL	SECURED TO 499 STRIKE PLATE WITH (8) 5/16"ø-18x3/4"(MIN.) MACHINE SCREWS.
15A	1	WEATHER STRIP (NATIONAL GUARD PRODUCTS #120NA)	NEOPRENE	SECURED WITH DOUBLE ROW OF #6x1/2" SMS SCREWS @ 1" FROM EACH END AND 4" O.C. (AS PREDRILLED BY MANUFACTURER)
16	1	THRESHOLD (NATIONAL GUARD PRODUCTS #950NA)	EXTRUDED ALUMINUM (6063-T5 ALLOY)	5" x 0.500" x 0.080" THICK, ATTACHED TO SLAB W/ 3/16"x 1 3/4" F. H. TAPCON ANCHORS W/ 1 1/4" MIN. EMBEDMENT LOCATED @ 2 3/4" FROM EACH END AND 10" O. C.
17	1	4 1/2" HINGE BAR REINFORCING FOR DOOR	GALVANNEAL STEEL	1.25" x 10" x 0.134" MIN. THICK
18	1	DOOR SURFACE BOLT REINFORCING	GALVANNEAL STEEL	14 GAGE (0.074") x 1.687" x 3.500" x 9.000" LONG.
19B	AS REQ'D	MODEL 1500-A LOUVER & SECURITY GRILLE	AS PER MANUFACTURER (AIR LOUVERS, INC.)	24" x 24" (MAX.), SEE SHEET 8 FOR DETAILS & COMPONENTS.
20	1	0.75" THICK EXPANDED POLYSTYRENE DOOR CORE OR 3/4" CELL PAPER HONEYCOMB.	0.75" THICK DOOR CORE: EXPANDED POLYSTYRENE SOLID SLAB RIGID BOARD TYPE 1. PCF COMFORMING TO ASTM C578 BY DYPLAST PRODUCTS LLC, OR 3/4" CELL PAPER HONEYCOMB.	BONDED TO FACE SHEET WITH CONTACT ADHESIVE HELMIBOND # 8320-1 APPLICATION RATE OF 7 GRAMS PER SQUARE FOOT ON ALL CORES
21	4	8" LONG # 275 D HAGER SURFACE BOLT	STEEL W/ US26D FINISH	ENGAGED TO THE DOOR AT TOP AND BOTTOM TO HEADER & THRESHOLD RESPECTIVELY & FASTENED TO DOOR W/ (4) #10-24 x 1 1/2" THRU BOLT EACH CONNECTION.
22	AS REQ'D	TAPCON ANCHORS	STEEL	3/16" x 1 3/4"
23	1	MORTISE LOCK AND RIM PANIC DEVICE REINFORCEMENT	0.074" MIN. THICK GALVANNEAL STEEL	SEE SHEET 15 FOR SUBCONJUNTS
24	1	#161 CYLINDRICAL LOCK AND DEAD BOLT REINFORCEMENT	SATIN COAT STEEL	SEE SHEET 16 FOR DETAILS
25	1	DOOR SURFACE CLOSER REINFORCEMENT	0.074" MIN. THICK GALVANNEAL STEEL	14 GAGE (0.074" MIN.) x 3 1/2" x 1.6875 x 16.250" LONG.
26	1	DOOR TOP/ BOTTOM END CHANNEL	16 GAGE GALVANNEAL STEEL	16 GAGE (0.057" MIN.) x 1.8125" x 1.4375.
27	1	'Z' ASTRAGAL	0.075" MIN. THICK A 500 GRADE B STEEL	0.075" MIN. THICK x 2.00" x (2)0.625" x 84" LONG.
28	1	DOOR SNAP IN TOP CAP	20 GAGE GALVANNEAL STEEL ASTM A-653, A-60	SEE SHEET 14 FOR SIZES
29	AS REQ'D	CAULKING: GE SILICONE II	N/A	
30	AS REQ'D	995 DOW CORNING STRUCTURAL SILICONE	N/A	

PRODUCT REVISED
to complying with the Florida
Building Code
Acceptance No 15-0427.01
Expiration Date 4/22/16
By: Ishmael Thomas
National Quality Product Control

Florida Building Code (High Velocity Hurricane Zone)

MIAMI-DADE COUNTY

WALTER A. TILLIT JR. LICENSE No. 44167 STATE OF FLORIDA PROFESSIONAL ENGINEER
P.E. SEAL/SIGNATURE/DATE

© 2015 TILTECO INC. (ENGINEERING)

TILTECO INC.
TILLIT TESTING & ENGINEERING COMPANY
6355 N.W. 36th. St. Ste. 305, VIRGINIA GARDENS, Fl. 33166
Phone : (305)871-1530 . Fax : (305)871-1531
e-mail: tilteco@aol.com
EB-0006719
WALTER A. TILLIT Jr. P.E.
FLORIDA Lic. # 44167

DOUBLE & SINGLE SERIES LS18 OUTSWING COMMERCIAL STEEL DOOR W/SERIES "AS" 16 GAGE STEEL FRAME LOUVERED ASSEMBLIES.

DAYBAR INDUSTRIES LTD
50 WEST DRIVE, BRAMPTON, ON CANADA, L6T 2J4
TEL: 905 625-8000 FAX: 905 625-4204

REV. No	DESCRIPTION	DATE	REV. No	DESCRIPTION	DATE
1	OLD 12-013	03/27/15	3		
2			4		

F.R.L.
DRAWN BY
03/27/15
DATE
15-051
DRAWING No
SHEET 19 OF 19