MIAMI-DADE COUNTY
PRODUCT CONTROL SECTION
11805 SW 26 Street, Room 208
Miami, Florida 33175-2474
T (786) 315-2590 F (786) 315-2599
www.miamidade.gov/economy

DEPARTMENT OF REGULATORY AND ECONOMIC RESOURCES (RER)
BOARD AND CODE ADMINISTRATION DIVISION

NOTICE OF ACCEPTANCE (NOA)

E.S. Windows, LLC
3550 N. W. 49 Street
Miami, Fl.33142

SCOPE:

This NOA is being issued under the applicable rules and regulations governing the use of construction materials. The documentation submitted has been reviewed and accepted by Miami-Dade County RER - Product Control Section to be used in Miami Dade County and other areas where allowed by the Authority Having Jurisdiction (AHJ).

This NOA shall not be valid after the expiration date stated below. The Miami-Dade County Product Control Section (In Miami Dade County) and/or the AHJ (in areas other than Miami Dade County) reserve the right to have this product or material tested for quality assurance purposes. If this product or material fails to perform in the accepted manner, the manufacturer will incur the expense of such testing and the AHJ may immediately revoke, modify, or suspend the use of such product or material within their jurisdiction. RER reserves the right to revoke this acceptance, if it is determined by Miami-Dade County Product Control Section that this product or material fails to meet the requirements of the applicable building code.

This product is approved as described herein, and has been designed to comply with the Florida Building Code, including the High Velocity Hurricane Zone.

DESCRIPTION: Series 6000 Aluminum Sliding Glass Doors w/wo Reinforcements-L.M.I.

APPROVAL DOCUMENT: Drawing No. **W11-41 Rev C**, titled "Series- 6000 Alum SLD. Glass Door (L.M.I.)", sheets 1 through 13 of 13, prepared by AL-Farooq Corporation, dated 07/22/11 and last revised on JUL 01, 2016, signed and sealed by Javad Ahmad, P.E., bearing the Miami-Dade County Product Control Revision stamp with the Notice of Acceptance number and expiration date by the Miami-Dade County Product Control Section.

Limitations:

1. See Design Pressure (DP) tables in sheets **3**, **4** and **5** with applicable reinforcing required at interlock & astragal. Also see approved configurations in sheet 2.
2. Applicable Egress requirement to be reviewed by building official.
3. Min (2) item #26 Pabose (GT345/460A) rollers per panel as specified per sheet **11** of Bill of material.

LABELING: Each unit shall bear a permanent label with the manufacturer's name or logo, **Barranquilla, Columbia** and series and following statement: "Miami-Dade County Product Control Approved".

RENEWAL of this NOA shall be considered after a renewal application has been filed and there has been no change in the applicable building code negatively affecting the performance of this product.

TERMINATION of this NOA will occur after the expiration date or if there has been a revision or change in the materials, use, and/or manufacture of the product or process. Misuse of this NOA as an endorsement of any product, for sales, advertising or any other purposes shall automatically terminate this NOA. Failure to comply with any section of this NOA shall be cause for termination and removal of NOA.

ADVERTISEMENT: The NOA number preceded by the words Miami-Dade County, Florida, and followed by the expiration date may be displayed in advertising literature. If any portion of the NOA is displayed, then it shall be done in its entirety.

INSPECTION: A copy of this entire NOA shall be provided to the user by the manufacturer or its distributors and shall be available for inspection at the job site at the request of the Building Official.

This NOA **revises & renews NOA #14-0408.01** and consists of this page 1 and evidence pages E-1, as well as approval document mentioned above.

The submitted documentation was reviewed by **Ishaq I. Chanda, P.E.**

MIAMI-DADE COUNTY APPROVED

NOA No. 15-0430.04
Expiration Date: January 19, 2018
Approval Date: July 07, 2016

7/1/16

NOTICE OF ACCEPTANCE: EVIDENCE SUBMITTED

A. DRAWINGS

1. Manufacturer's die drawings and sections (Submitted under file #**14-0408.01**).
2. Drawing No. **W11-41 Rev C**, titled "Series- 6000 Alum SLD. Glass Door (L.M.I.)", sheets 1 through 13 of 13, prepared by AL-Farooq Corporation, dated 07/22/11 and last revised on JUL 01, 2016, signed and sealed by Javad Ahmad, P.E.

B. TESTS (Submitted under file #**14-0408.01/#11-0825.07**)

1. Test reports on: 1) Air Infiltration Test, per FBC, TAS 202-94
   2) Uniform Static Air Pressure Test, Loading per FBC TAS 202-94
   3) Water Resistance Test, per FBC, TAS 202-94
   4) Large Missile Impact Test per FBC, TAS 201-94
   5) Cyclic Wind Pressure Loading per FBC, TAS 203-94
   6) Forced Entry Test, per FBC 2411 3.2.1, TAS 202-94

   along with marked-up drawings and installation diagram of aluminum sliding glass door, prepared by Fenestration Testing Lab., Inc., Test Report No. **FTL-6292** (samples **A-1, B-1, C-1, D-1 & E-1**), dated 08/15/11, signed and sealed by Marlin D. Brinson, P. E.
   (Note: This report has been revised for glazing types in sample A1 & E-1)
2. Additional roller assembly qualification test report #FTL 7651 per TAS 201, 202 & 203-94

C. CALCULATIONS

1. Anchor verification calculations and structural analysis, complying with FBC 2014 (5th Edition), prepared by Al Farooq Corporation, dated DEC 23, 2015, signed and sealed by Javad Ahmad, P.E.
2. Roller assembly dead load structural analysis prepared by Al-Farooq Corporation, dated 02/17/14 and last revised on 06/16/14, signed and sealed by Javad Ahmad, P.E. (Submitted under file #**14-0408.01**).
3. Glazing complies w/ ASTME-1300-02 -04 & -09

D. QUALITY ASSURANCE

1. Miami-Dade Department of Regulatory and Economic Resources (RER).

E. MATERIAL CERTIFICATIONS

1. Notice of Acceptance No. **14-0916.11** issued to **Kuraray America, Inc.** for their **"SentryGlas® (Clear and White) Glass Interlayers**", expiring on 07/04/18.

F. STATEMENTS

1. Statement letter of conformance to FBC 2014 (5th Edition) and letter of no financial interest, prepared by Al Farooq Corporation, dated 12/15/15, signed and sealed by Javad Ahmad, P.E.
2. Laboratory compliance statements, part of the above referenced test reports.
3. Distribution agreement between ES Windows-Energia Solar, SA, Colombia and ES Windows, LLC, USA, dated 10/29/10, signed by MS Carla Torrente and Andres Chomaro, respectively.
4. Two panel test E.S. Windows commitment letter dated June 29, 2016 and single roller test proposal dated June 20, 2014, both signed by A. Chamorro, General Manager.

G. OTHER

1. This NOA **revises & renews NOA #14-0408.01**, conditionally for one year, expiring JAN 19, 2018.
2. Test proposals dated 06/30/16 & 04/15/14 approved by RER and Test proposal # **10-0506**, dated 09-23-10, approved by BCCO.

Ishaq I. Chanda

Ishaq I. Chanda, P.E.
Product Control Examiner
NOA No. 15-0430.04
Expiration Date: January 19, 2018
Approval Date: July 07, 2016

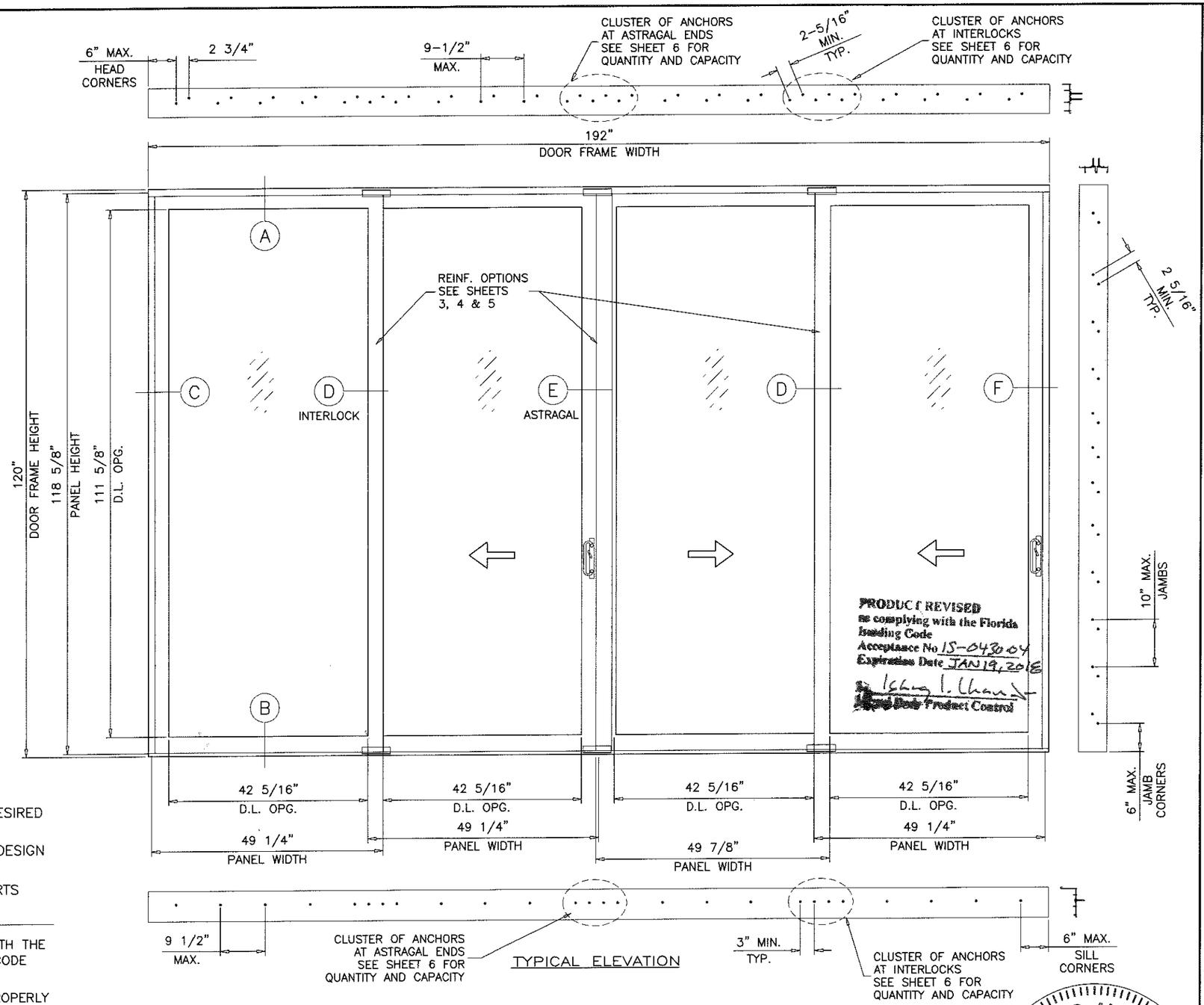

TYPICAL ELEVATION

DAYLITE OPENINGS:
D.L.O. HEIGHT = PANEL HEIGHT – 7.000"
D.L.O. WIDTH = PANEL WIDTH – 6.937"
PANEL HEIGHT = FRAME HEIGHT – 1.375"

SERIES-6000 ALUMINUM SLIDING GLASS DOOR

SEE SHEETS 3 THRU 5 FOR DESIGN LOAD CAPACITY OF DESIRED GLASS SIZE AND REQUIRED REINFORCING.

USING CHART ON SHEET 6 SELECT ANCHOR OPTION WITH DESIGN RATING MORE THAN DESIGN LOADS REQUIRED.

LOWER DESIGN PRESSURES FROM GLASS OR ANCHOR CHARTS WILL APPLY TO ENTIRE SYSTEM.

THIS PRODUCT HAS BEEN DESIGNED AND TESTED TO COMPLY WITH THE REQUIREMENTS OF THE 2014 (5TH EDITION) FLORIDA BUILDING CODE INCLUDING HIGH VELOCITY HURRICANE ZONE (HVHZ).

1BY OR 2BY WOOD BUCKS BY OTHERS, MUST BE ANCHORED PROPERLY TO TRANSFER LOADS TO THE STRUCTURE.

ANCHORS SHALL BE AS LISTED, SPACED AS SHOWN ON DETAILS, ANCHORS EMBEDMENT TO BASE MATERIAL SHALL BE BEYOND WALL DRESSING OR STUCCO.

ANCHORING OR LOADING CONDITIONS NOT SHOWN IN THESE DETAILS ARE NOT PART OF THIS APPROVAL.

A LOAD DURATION INCREASE IS USED IN DESIGN OF ANCHORS INTO WOOD ONLY.

ALL SHIMS TO BE HIGH IMPACT, NON-METALLIC AND NON-COMPRESSIBLE.

MATERIALS INCLUDING BUT NOT LIMITED TO STEEL/METAL SCREWS, THAT COME INTO CONTACT WITH OTHER DISSIMILAR MATERIALS SHALL MEET THE REQUIREMENTS OF THE 2014 FLORIDA BUILDING CODE & ADOPTED STANDARDS.

THESE DOORS ARE RATED FOR LARGE & SMALL MISSILE IMPACT. SHUTTERS ARE NOT REQUIRED.
VERIFY COMPLIANCE WITH EGRESS LIMITATIONS WHERE REQUIRED.

JUL 07 2016

JAVAD AHMAD
LICENSE
No. 70592
STATE OF FLORIDA
PROFESSIONAL ENGINEER

AL-FAROOQ CORPORATION
ENGINEERS & PRODUCT DEVELOPMENT
9360 SUNSET DRIVE, SUITE 220
MIAMI, FLORIDA 33173 (C.A.N. 3538)
TEL. (305) 264-8100 FAX. (305) 262-6978
COMP-ANL\W11-41ES

SERIES-6000 ALUM SLIDING GLASS DOOR (L.M.I.)

E.S. WINDOWS, LLC
3550 N.W. 49 STREET
MIAMI, FL. 33142
TEL. (305) 638-5151 FAX. (305) 638-5158

revisions:

no	date	by	description
A	12.28.11		REV. PER BCCO COMMENTS
B	06.13.14		NO CHANGE THIS SHEET
C	12.16.15		GENERAL REVISION
D	06.09.16		REV. PER RER COMMENTS

date: 07-22-11
scale: 1/2"=1'-0"
dr. by: HAMID
chk. by:

drawing no.
W11-41

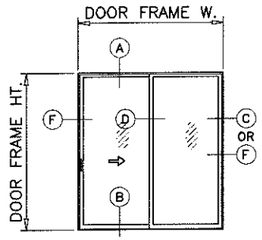

XO (SHOWN)
OX
XX

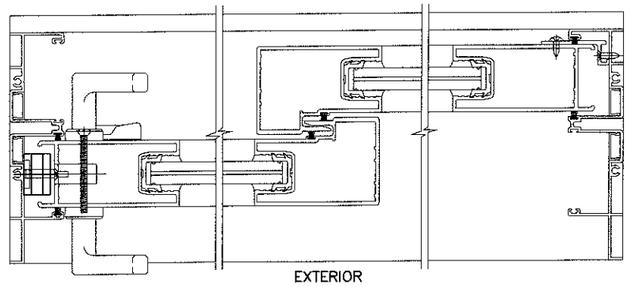

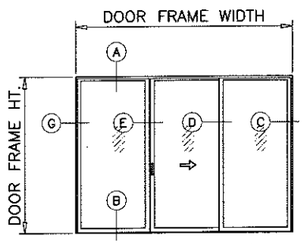

OXO (SHOWN)

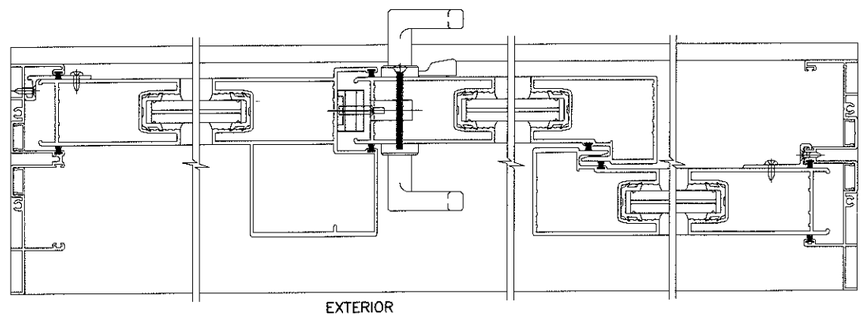

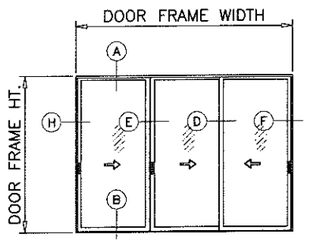

XXX (SHOWN)

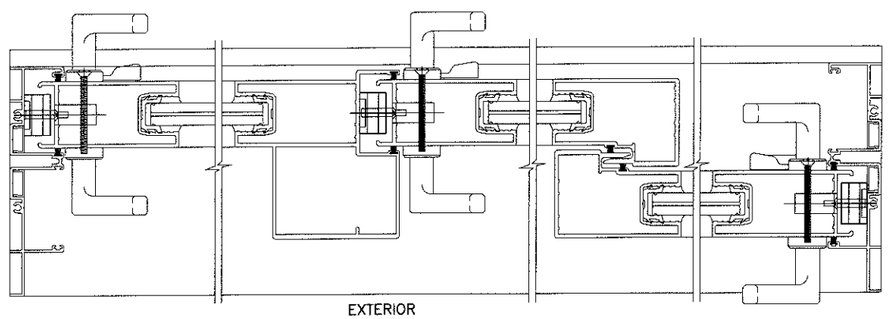

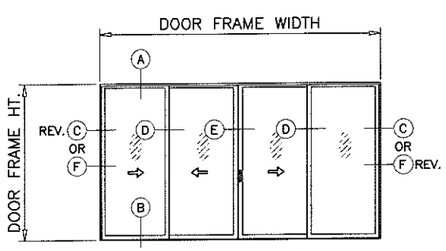

XXXO (SHOWN)
XXXX
OXXO

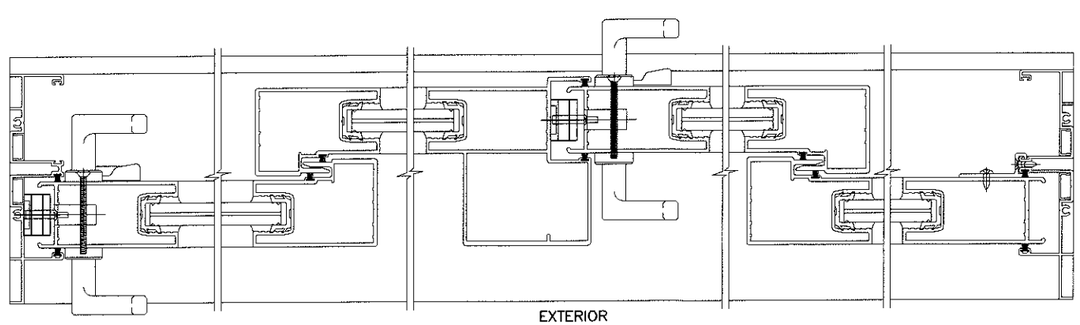

APPROVED CONFIGURATIONS
4 PANELS OR LESS

NOTE : OVERALL DOOR FRAME WIDTH NOT TO EXCEED 192" FOR 4 PANEL CONFIGURATIONS

NOTE:
CONFIGURATIONS SHOWN FOR ILLUSTRATION PURPOSE
SEE APPLICABLE DESIGN PRESSURE & SIZE IN
SHEETS 3 THRU 5 AND ANCHOR INSTALLATION IN SHEET 6.

PRODUCT REVISED
as complying with the Florida Building Code
Acceptance No 15-0430.04
Expiration Date 1/19/18
By [signature]
Miami-Dade Product Control

JUL 01 2016

JAVAD AHMAD
LICENSE
No. 70592
STATE OF FLORIDA
PROFESSIONAL ENGINEER

AL-FAROOQ CORPORATION
ENGINEERS & PRODUCT DEVELOPMENT
9360 SUNSET DRIVE, SUITE 220
MIAMI, FLORIDA 33173 (C.A.N. 3538)
TEL. (305) 264-8100 FAX. (305) 262-6978

COMP-ANL\W11-41ES

SERIES-6000 ALUM SLIDING GLASS DOOR (L.M.I.)

E.S. WINDOWS, LLC
3550 N.W. 49 STREET
MIAMI, FL. 33142
TEL. (305) 638-5151 FAX. (305) 638-5158

revisions:

no	date	by	description
A	12.28.11		REV. PER BCCO COMMENTS
B	06.13.14		NO CHANGE THIS SHEET
C	12.16.15		GENERAL REVISION
D	06.09.16		REV. PER RER COMMENTS

date: 07-22-11
scale: -
dr. by: HAMID
chk. by:

drawing no.
W11-41

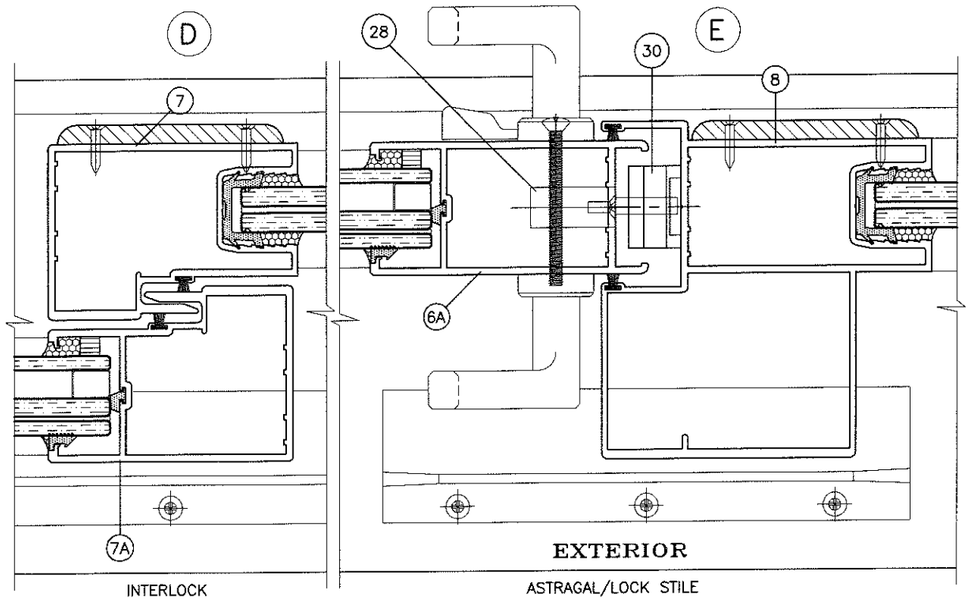

OPTION #1
WITHOUT REINFORCING

DESIGN LOAD CAPACITY – PSF WITHOUT REINFORCING					
PANEL WIDTH NOMINAL INCHES	DOOR FRAME HEIGHT INCHES	GLASS TYPE 'A'		GLASS TYPE 'B' & 'B' REVERSE	
		EXT.(+)	INT.(–)	EXT.(+)	INT.(–)
30	82	75.0	75.0	75.0	75.0
36		75.0	75.0	75.0	75.0
42		75.0	75.0	75.0	75.0
44		75.0	75.0	75.0	75.0
48		75.0	75.0	75.0	75.0
53		67.9	67.9	67.9	67.9
60		60.0	60.0	60.0	60.0
30	96	75.0	75.0	75.0	75.0
36		75.0	75.0	75.0	75.0
42		75.0	75.0	75.0	75.0
44		75.0	75.0	75.0	75.0
48		75.0	75.0	75.0	75.0
53		67.9	67.9	67.9	67.9
30	102	75.0	75.0	75.0	75.0
36		75.0	75.0	75.0	75.0
42		75.0	75.0	75.0	75.0
44		75.0	75.0	75.0	75.0
48		75.0	75.0	75.0	75.0
50		75.0	75.0	75.0	75.0
30	108	75.0	75.0	75.0	75.0
36		75.0	75.0	75.0	75.0
42		75.0	75.0	75.0	75.0
44		75.0	75.0	75.0	75.0
48		75.0	75.0	75.0	75.0

NOTE:
GLASS CAPACITIES ON THIS SHEET ARE BASED ON ASTM E1300–09 (3 SEC. GUSTS) AND FLORIDA BUILDING COMMISSION DECLARATORY STATEMENT DCA05–DEC–219

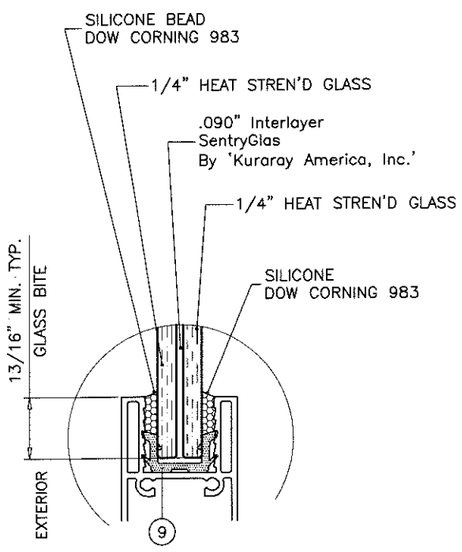

GLASS TYPE 'A'
9/16" OVERALL LAM. GLASS

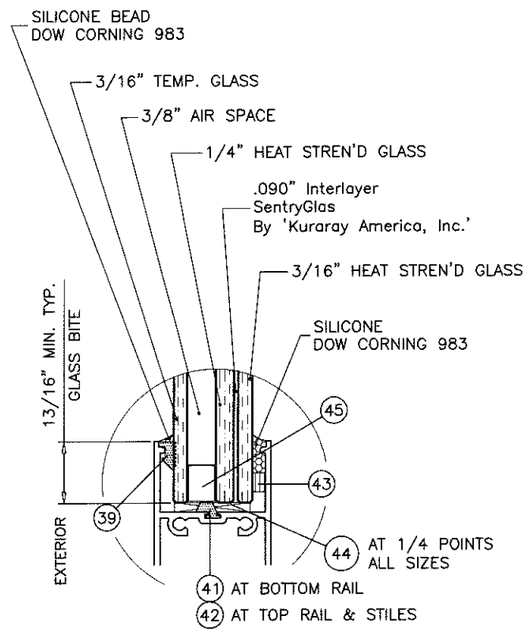

GLASS TYPE 'B'
1" OVERALL INSUL. LAM. GLASS

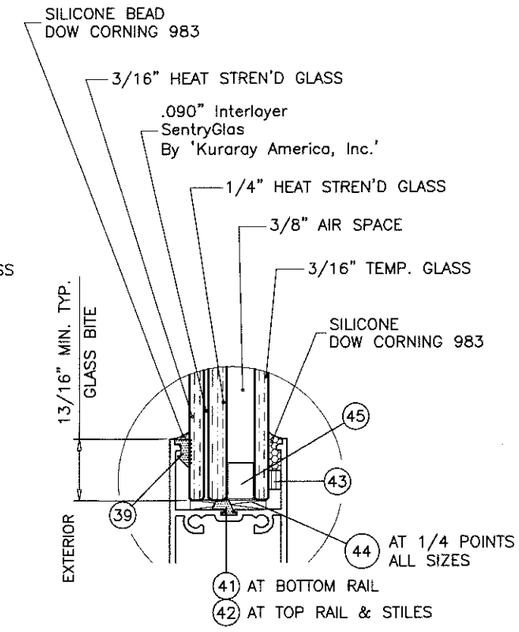

GLASS TYPE 'B' (REVERSE)
1" OVERALL INSUL. LAM. GLASS

GLAZING OPTIONS

PRODUCT REVISED
as complying with the Florida building Code
Acceptance No. 15-0430.04
Expiration Date 1/19/18
By Ishaq Lakhani
Miami-Dade Product Control

JUL 01 2016

JAVAD AHMAD
LICENSE
No. 70592
STATE OF FLORIDA
PROFESSIONAL ENGINEER

AL-FAROOQ CORPORATION
ENGINEERS & PRODUCT DEVELOPMENT
9360 SUNSET DRIVE, SUITE 220
MIAMI, FLORIDA 33173 (C.A.N. 3538)
TEL. (305) 264-8100 FAX. (305) 262-6978

COMP–ANL\W11–41ES

SERIES–6000 ALUM SLIDING GLASS DOOR (L.M.I.)

E.S. WINDOWS, LLC
3550 N.W. 49 STREET
MIAMI, FL. 33142
TEL. (305) 638–5151 FAX. (305) 638–5158

revisions:

no.	date	by	description
A	12.28.11		REV. PER BCCO COMMENTS
B	06.13.14		NO CHANGE THIS SHEET
C	12.16.15		GENERAL REVISION
D	06.09.16		REV. PER RER COMMENTS

date: 07–22–11
scale: 1/2" = 1"
dr. by: HAMID
chk. by:

drawing no. W11–41

sheet 3 of 13

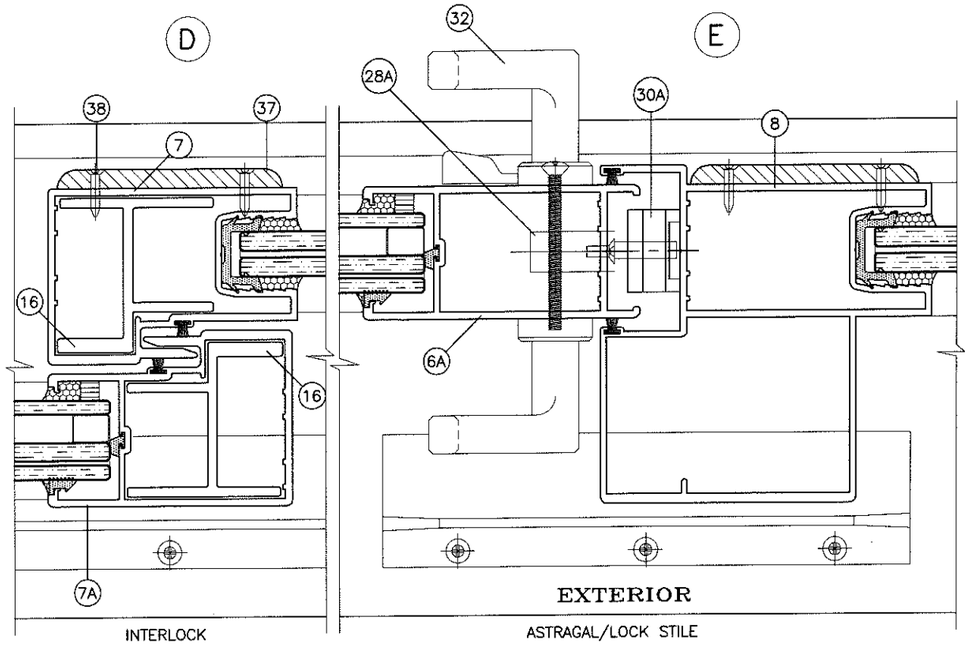

OPTION #2

ALUMINUM REINFORCING AT INTERLOCK

DESIGN LOAD CAPACITY – PSF REINFORCING AT INTERLOCK							
PANEL WIDTH NOMINAL INCHES	DOOR FRAME HEIGHT INCHES	GLASS TYPE 'A'		GLASS TYPE 'B'		GLASS TYPE 'B' REVERSE	
		EXT. (+)	INT. (–)	EXT. (+)	INT. (–)	EXT. (+)	INT. (–)
36	82	85.0	145.0	85.0	145.0	85.0	110.0
40		85.0	145.0	85.0	145.0	85.0	110.0
44		85.0	145.0	85.0	145.0	85.0	110.0
48		85.0	145.0	85.0	145.0	85.0	110.0
50		81.6	139.2	81.6	139.2	81.6	105.6
53		77.0	131.3	77.0	131.3	77.0	99.6
56		72.9	124.3	72.9	124.3	72.9	94.3
60		68.0	116.0	68.0	116.0	68.0	88.0
36	96	85.0	145.0	85.0	145.0	85.0	110.0
40		85.0	145.0	85.0	145.0	85.0	110.0
44		85.0	145.0	85.0	145.0	85.0	110.0
48		85.0	145.0	85.0	145.0	85.0	110.0
50		81.6	139.2	81.6	139.2	81.6	105.6
53		77.0	131.3	77.0	131.3	77.0	99.6
56		72.9	94.3	72.9	94.3	72.9	94.3
60		68.0	88.0	68.0	88.0	68.0	88.0
36	102	85.0	145.0	85.0	145.0	85.0	110.0
40		85.0	145.0	85.0	145.0	85.0	110.0
44		85.0	145.0	85.0	145.0	85.0	110.0
48		85.0	145.0	85.0	145.0	85.0	110.0
50		81.6	139.2	81.6	139.2	81.6	105.6
53		77.0	99.6	77.0	99.6	77.0	99.6
56		72.9	94.3	72.9	94.3	72.9	94.3
36	108	85.0	145.0	85.0	145.0	85.0	110.0
40		85.0	145.0	85.0	145.0	85.0	110.0
44		85.0	145.0	85.0	145.0	85.0	110.0
48		85.0	145.0	85.0	140.6	85.0	110.0
50		81.6	105.6	81.6	105.6	81.6	105.6
53		77.0	99.6	77.0	99.6	77.0	99.6
36	114	85.0	110.0	85.0	110.0	85.0	110.0
40		85.0	110.0	85.0	110.0	85.0	110.0
44		85.0	110.0	85.0	110.0	85.0	110.0
48		85.0	110.0	85.0	110.0	85.0	110.0
50		81.6	105.6	81.6	105.6	81.6	105.6
36	120	85.0	110.0	85.0	110.0	85.0	110.0
40		85.0	110.0	85.0	110.0	85.0	110.0
44		85.0	110.0	85.0	110.0	85.0	110.0
48		85.0	110.0	85.0	110.0	85.0	110.0

PRODUCT REVISED
as complying with the Florida
Building Code
Acceptance No 15-0430.04
Expiration Date 1/19/18
By Ishwar L. Chandra
Miami-Dade Product Control

JUL 01 2016

JAVAD AHMAD
LICENSE
No. 70592
STATE OF FLORIDA
PROFESSIONAL ENGINEER

NOTE:
GLASS CAPACITIES ON THIS SHEET ARE
BASED ON ASTM E1300–09 (3 SEC. GUSTS)
AND FLORIDA BUILDING COMMISSION
DECLARATORY STATEMENT DCA05–DEC–219

AL-FAROOQ CORPORATION
ENGINEERS & PRODUCT DEVELOPMENT
9360 SUNSET DRIVE, SUITE 220
MIAMI, FLORIDA 33173 (C.A.N. 3538)
TEL. (305) 264-8100 FAX. (305) 262-6978

COMP–ANL\W11–41ES

SERIES–6000 ALUM SLIDING GLASS DOOR (L.M.I.)

E.S. WINDOWS, LLC
3550 N.W. 49 STREET
MIAMI, FL. 33142
TEL. (305) 638–5151 FAX. (305) 638–5158

revisions:

no	date	by	description
A	12.28.11		REV. PER BCCO COMMENTS
B	06.13.14		CHART REV.
C	12.16.15		GENERAL REVISION
D	06.09.16		NO CHANGE THIS SHEET

date: 07–22–11
scale: 1/2" = 1"
dr. by: HAMID
chk. by:

drawing no.
W11–41

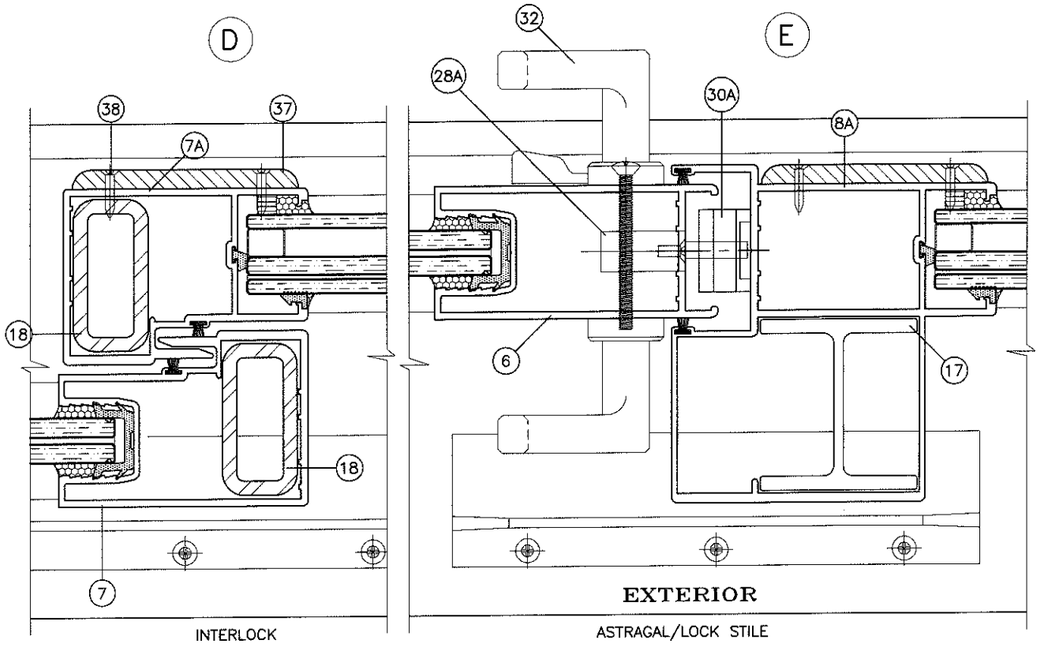

OPTION #3

STEEL REINFORCING AT INTERLOCK
ALUMINUM REINFORCING AT ASTRAGAL

DESIGN LOAD CAPACITY – PSF
REINFORCING AT INTERLOCK & ASTRAGAL

PANEL WIDTH NOMINAL INCHES	DOOR FRAME HEIGHT INCHES	GLASS TYPE 'A'		GLASS TYPE 'B'		GLASS TYPE 'B' REVERSE	
		EXT. (+)	INT. (–)	EXT. (+)	INT. (–)	EXT. (+)	INT. (–)
36	82	85.0	130.0	85.0	130.0	85.0	110.0
40		85.0	130.0	85.0	130.0	85.0	110.0
44		85.0	130.0	85.0	130.0	85.0	110.0
48		85.0	130.0	85.0	130.0	85.0	110.0
50		81.6	124.8	81.6	124.8	81.6	105.6
53		77.0	117.7	77.0	117.7	77.0	99.6
56		72.9	111.4	72.9	111.4	72.9	94.3
60		68.0	104.0	68.0	104.0	68.0	88.0
36	96	85.0	130.0	85.0	130.0	85.0	110.0
40		85.0	130.0	85.0	130.0	85.0	110.0
44		85.0	130.0	85.0	130.0	85.0	110.0
48		85.0	130.0	85.0	130.0	85.0	110.0
50		81.6	124.8	81.6	124.8	81.6	105.6
53		77.0	117.7	77.0	117.7	77.0	99.6
56		72.9	111.4	72.9	111.4	72.9	94.3
60		68.0	104.0	68.0	104.0	68.0	88.0
36	102	85.0	130.0	85.0	130.0	85.0	110.0
40		85.0	130.0	85.0	130.0	85.0	110.0
44		85.0	130.0	85.0	130.0	85.0	110.0
48		85.0	130.0	85.0	130.0	85.0	110.0
50		81.6	124.8	81.6	124.8	81.6	105.6
53		77.0	117.7	77.0	117.7	77.0	99.6
56		72.9	111.4	72.9	111.4	72.9	94.3
36	108	85.0	130.0	85.0	130.0	85.0	110.0
40		85.0	130.0	85.0	130.0	85.0	110.0
44		85.0	130.0	85.0	130.0	85.0	110.0
48		85.0	125.7	85.0	125.7	85.0	110.0
50		81.6	124.8	81.6	124.8	81.6	105.6
53		77.0	117.7	77.0	117.7	77.0	99.6
36	114	85.0	130.0	85.0	130.0	85.0	110.0
40		85.0	130.0	85.0	130.0	85.0	110.0
44		85.0	125.2	85.0	125.2	85.0	110.0
48		85.0	117.3	85.0	117.3	85.0	110.0
50		81.6	105.6	81.6	105.6	81.6	105.6
36	120	85.0	130.0	85.0	130.0	85.0	110.0
40		85.0	126.7	85.0	126.7	85.0	110.0
44		85.0	117.6	85.0	117.6	85.0	110.0
48		85.0	110.0	85.0	110.0	85.0	110.0

PRODUCT REVISED
as complying with the Florida
Building Code
Acceptance No 15-0430.04
Expiration Date 11/19/18
By Islam I. Chawdhury
Miami-Dade Product Control

JUL 01 2016

JAVAD AHMAD
LICENSE
No. 70592
STATE OF FLORIDA
PROFESSIONAL ENGINEER

NOTE:
GLASS CAPACITIES ON THIS SHEET ARE
BASED ON ASTM E1300–09 (3 SEC. GUSTS)
AND FLORIDA BUILDING COMMISSION
DECLARATORY STATEMENT DCA05–DEC–219

AL-FAROOQ CORPORATION
ENGINEERS & PRODUCT DEVELOPMENT
9360 SUNSET DRIVE, SUITE 220
MIAMI, FLORIDA 33173 (C.A.N. 3538)
TEL. (305) 264-8100 FAX. (305) 262-6978

COMP–ANL\W11–41ES

SERIES–6000 ALUM SLIDING GLASS DOOR (L.M.I.)

E.S. WINDOWS, LLC
3550 N.W. 49 STREET
MIAMI, FL. 33142
TEL. (305) 638–5151 FAX. (305) 638–5158

revisions:

no	date	by	description
A	12.28.11		REV. PER BCCO COMMENTS
B	06.13.14		CHART REV.
C	12.16.15		GENERAL REVISION
D	06.09.16		NO CHANGE THIS SHEET

date: 07–22–11
scale: 1/2" = 1"
dr. by: HAMID
chk. by:

drawing no.
W11–41

HEAD ANCHOR LOAD CAPACITY – PSF

AVERAGE PANEL WIDTH INCHES	DOOR FRAME HEIGHT INCHES	ANCHOR TYPE 'A' 6 ANCHORS AT MTG. STILE ENDS INT. (–)	ANCHOR TYPE 'A' 7 ANCHORS AT MTG. STILE ENDS INT. (–)	ANCHOR TYPE 'B' 6 ANCHORS AT MTG. STILE ENDS INT. (–)	ANCHOR TYPE 'C' 6 ANCHORS AT MTG. STILE ENDS INT. (–)
30	82	145.0	145.0	145.0	145.0
36		145.0	145.0	145.0	145.0
40		145.0	145.0	145.0	145.0
42		145.0	145.0	145.0	145.0
44		145.0	145.0	145.0	145.0
48		145.0	145.0	145.0	145.0
50		139.2	139.2	139.2	139.2
53		131.3	131.3	131.3	131.3
56		124.3	124.3	124.3	124.3
60		116.0	116.0	116.0	116.0
30	96	145.0	145.0	145.0	145.0
36		145.0	145.0	145.0	145.0
40		135.9	145.0	145.0	145.0
42		131.1	145.0	145.0	145.0
44		126.8	145.0	145.0	145.0
48		119.5	139.4	145.0	145.0
50		116.3	135.7	139.2	139.2
53		112.1	130.0	131.3	131.3
56		94.3	94.3	94.3	94.3
60		88.0	88.0	88.0	88.0
30	102	130.0	130.0	130.0	130.0
36		130.0	130.0	130.0	130.0
40		125.9	130.0	130.0	130.0
42		121.4	130.0	130.0	130.0
44		117.3	130.0	130.0	130.0
48		110.3	128.7	130.0	130.0
50		107.3	125.1	130.0	130.0
53		99.6	99.6	99.6	99.6
56		94.3	94.3	94.3	94.3
30	108	130.0	130.0	130.0	130.0
36		127.5	130.0	130.0	130.0
40		117.3	130.0	130.0	130.0
42		113.0	130.0	130.0	130.0
44		109.1	127.3	130.0	130.0
48		102.4	119.5	130.0	130.0
50		99.5	105.6	105.6	105.6
53		95.6	99.6	99.6	99.6
30	114	110.0	110.0	110.0	110.0
36		110.0	110.0	110.0	110.0
40		109.8	110.0	110.0	110.0
42		105.7	110.0	110.0	110.0
44		102.0	110.0	110.0	110.0
48		95.6	110.0	110.0	110.0
50		92.8	108.3	110.0	110.0
30	120	110.0	110.0	110.0	110.0
36		110.0	110.0	110.0	110.0
40		103.2	110.0	110.0	110.0
42		99.3	110.0	110.0	110.0
44		95.8	110.0	110.0	110.0
48		89.6	104.6	110.0	110.0

EXT.(+) Dp = 85 PSF MAX.

SILL ANCHOR LOAD CAPACITY – PSF

AVERAGE PANEL WIDTH INCHES	DOOR FRAME HEIGHT INCHES	ANCHOR TYPE 'B' 4 ANCHORS AT MTG. STILE ENDS INT. (–)	ANCHOR TYPE 'B' 5 ANCHORS AT MTG. STILE ENDS INT. (–)
30	82	145.0	145.0
36		145.0	145.0
40		145.0	145.0
42		145.0	145.0
44		145.0	145.0
48		145.0	145.0
50		139.2	139.2
53		131.3	131.3
56		124.3	124.3
60		116.0	116.0
30	96	145.0	145.0
36		145.0	145.0
40		145.0	145.0
42		142.6	145.0
44		138.0	145.0
48		130.0	145.0
50		126.6	139.2
53		122.0	131.3
56		94.3	94.3
60		88.0	88.0
30	102	130.0	130.0
36		130.0	130.0
40		130.0	130.0
42		130.0	130.0
44		127.6	130.0
48		120.0	130.0
50		116.7	130.0
53		99.6	99.6
56		94.3	94.3
30	108	130.0	130.0
36		130.0	130.0
40		127.6	130.0
42		123.0	130.0
44		118.7	130.0
48		111.4	130.0
50		105.6	105.6
53		99.6	99.6
30	114	110.0	110.0
36		110.0	110.0
40		110.0	110.0
42		110.0	110.0
44		110.0	110.0
48		104.0	110.0
50		101.0	110.0
30	120	110.0	110.0
36		110.0	110.0
40		110.0	110.0
42		108.1	110.0
44		104.2	110.0
48		97.5	110.0

NOTE:
SEE SHEETS 3 THRU 5 FOR DESIGN LOAD CAPACITY OF DESIRED GLASS SIZE.
USING CHART ON THIS SHEET SELECT ANCHOR OPTION WITH DESIGN RATING MORE THAN DESIGN LOADS REQUIRED.
LOWER DESIGN PRESSURES FROM GLASS OR HEAD, SILL, JAMB ANCHOR CHARTS WILL APPLY TO ENTIRE SYSTEM.

TYPICAL ANCHORS: SEE ELEV. FOR SPACING

AT HEAD

TYPE 'A'– 1/4" DIA. ULTRACON BY 'ELCO' (Fu=177 KSI, Fy=155 KSI)
INTO 2BY WOOD BUCKS OR WOOD STRUCTURES
1–1/2" MIN. PENETRATION INTO WOOD

THRU 1BY BUCKS INTO CONCRETE
1–1/2" MIN. EMBED INTO CONCRETE

TYPE 'B'– 1/4" DIA. ULTRACON BY 'ELCO' (Fu=177 KSI, Fy=155 KSI)
DIRECTLY INTO CONCRETE
1–1/2" MIN. EMBED

TYPE 'C'– #14 SMS OR SELF DRILLING SCREWS (GRADE 2 CRS)
INTO MIAMI–DADE COUNTY APPROVED MULLIONS (1/8" THK. MIN.)
INTO METAL STRUCTURES
STEEL : 1/8" THK. MIN. (Fy = 36 KSI MIN.)
ALUMINUM : 1/8" THK. MIN. (6063–T5 MIN.)
(STEEL IN CONTACT WITH ALUMINUM TO BE PLATED OR PAINTED)

AT SILL

TYPE 'B'– 1/4" DIA. ULTRACON BY 'ELCO' (Fu=177 KSI, Fy=155 KSI)
DIRECTLY INTO CONCRETE
1–3/4" MIN. EMBED

AT JAMBS

TYPE 'A'– 1/4" DIA. ULTRACON BY 'ELCO' (Fu=177 KSI, Fy=155 KSI)
INTO 2BY WOOD BUCKS OR WOOD STRUCTURES
1–1/2" MIN. PENETRATION INTO WOOD

THRU 1BY BUCKS INTO CONC. OR MASONRY
1–1/4" MIN. EMBED INTO CONC. OR MASONRY

TYPE 'B'– 1/4" DIA. ULTRACON BY 'ELCO' (Fu=177 KSI, Fy=155 KSI)
DIRECTLY INTO CONC. OR MASONRY
1–1/4" MIN. EMBED INTO CONC. OR MASONRY

TYPE 'C'– #14 SMS OR SELF DRILLING SCREWS (GRADE 2 CRS)
INTO MIAMI–DADE COUNTY APPROVED MULLIONS (1/8" THK. MIN.)
INTO METAL STRUCTURES
STEEL : 1/8" THK. MIN. (Fy = 36 KSI MIN.)
ALUMINUM : 1/8" THK. MIN. (6063–T5 MIN.)
(STEEL IN CONTACT WITH ALUMINUM TO BE PLATED OR PAINTED)

ANCHOR EDGE DISTANCES

INTO CONCRETE = 2–1/2" MIN.
INTO WOOD STRUCTURE = 1" MIN.
INTO METAL STRUCTURE = 3/4" MIN.

WOOD AT HEAD OR JAMBS SG = 0.55 MIN.
CONCRETE AT HEAD, SILL OR JAMBS f'c = 3000 PSI MIN.
C–90 HOLLOW/FILLED BLOCK AT JAMBS f'm = 2000 PSI MIN.

PRODUCT REVISED
as complying with the Florida Building Code
Acceptance No. 15-0430.04
Expiration Date 1/19/18
By Sheng L. Chan
Mgr. Dade/Product Control

JUL 0 1 2016

JAVAD AHMAD
LICENSE
No. 70592
STATE OF FLORIDA
PROFESSIONAL ENGINEER

AL-FAROOQ CORPORATION
ENGINEERS & PRODUCT DEVELOPMENT
9360 SUNSET DRIVE, SUITE 220
MIAMI, FLORIDA 33173 (C.A.N. 3538)
TEL. (305) 264-8100 FAX. (305) 262-6978

COMP–ANL\W11–41ES

SERIES–6000 ALUM SLIDING GLASS DOOR (L.M.I.)

E.S. WINDOWS, LLC
3550 N.W. 49 STREET
MIAMI, FL. 33142
TEL. (305) 638–5151 FAX. (305) 638–5158

revisions:

no	date	by	description
A	12.28.11		REV. PER BCCO COMMENTS
B	06.13.14		WOOD EMBED REV.
C	12.16.15		GENERAL REVISION
D	06.09.16		REV. PER RER COMMENTS

date: 07–22–11
scale: 1/2" = 1"
dr. by: HAMID
chk. by:

drawing no. W11–41

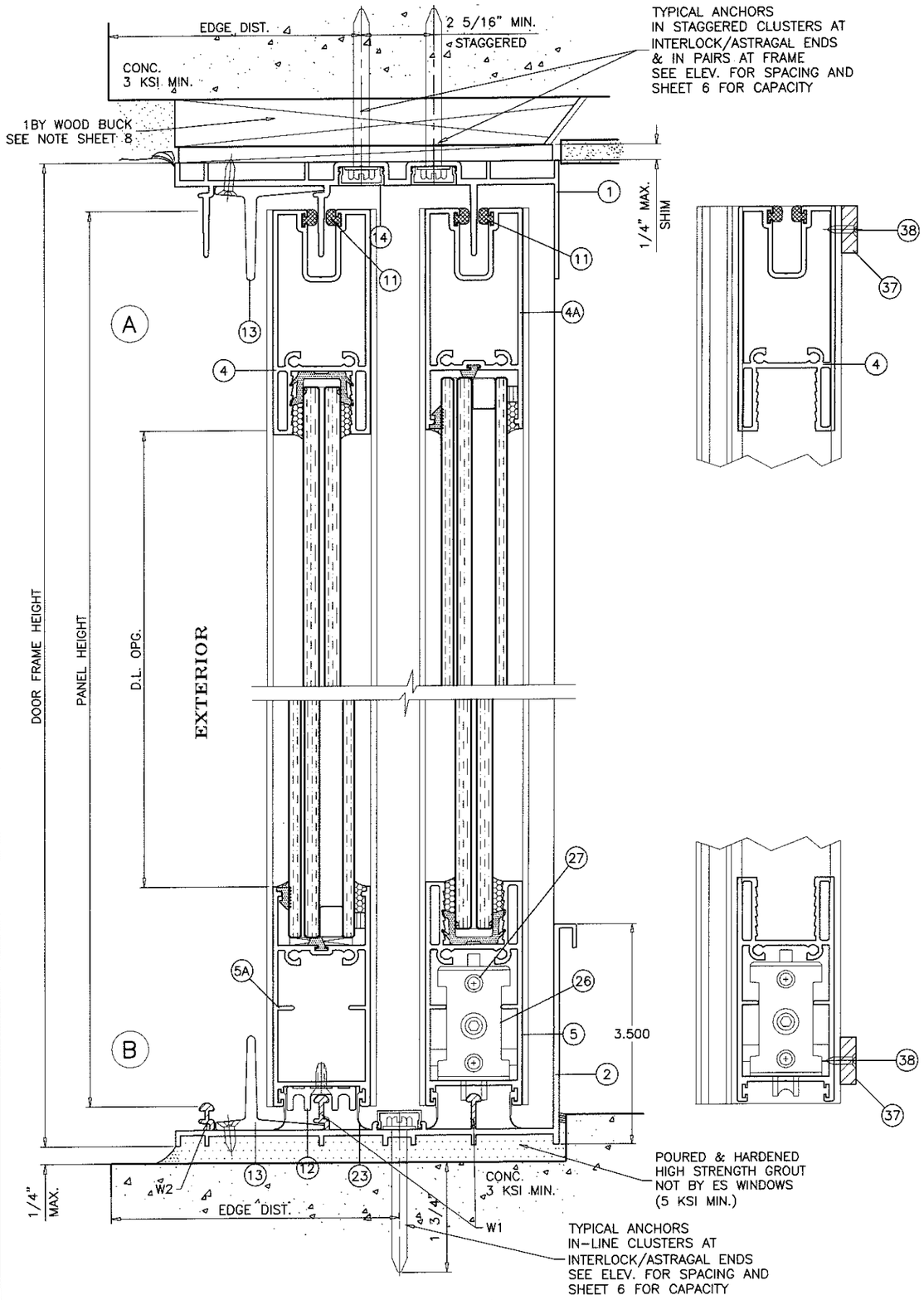

SEALANT:

ALL JOINTS AND FRAME CONNECTIONS SEALED WITH WHITE/ALUMINUM COLORED SILICONE.

WEEPHOLES:

W1 = 2-5/8" LONG WEEP NOTCH AT EACH END
W2 = 1" LONG WEEP NOTCH AT EACH END

PRODUCT REVISED
as complying with the Florida
Building Code
Acceptance No 15-0430.04
Expiration Date 1/19/18
By [signature]
Miami Dade Product Control

JUL 01 2016

JAVAD AHMAD
LICENSE
No. 70592
STATE OF FLORIDA
PROFESSIONAL ENGINEER

AL-FAROOQ CORPORATION
ENGINEERS & PRODUCT DEVELOPMENT
9360 SUNSET DRIVE, SUITE 220
MIAMI, FLORIDA 33173 (C.A.N. 3538)
TEL. (305) 264-8100 FAX. (305) 262-6978

COMP-ANL\W11-41ES

SERIES-6000 ALUM SLIDING GLASS DOOR (L.M.I.)

E.S. WINDOWS, LLC
3550 N.W. 49 STREET
MIAMI, FL. 33142
TEL. (305) 638-5151 FAX. (305) 638-5158

revisions:

no	date	by	description
A	12.28.11		REV. PER BCCO COMMENTS
B	06.13.14		NO CHANGE THIS SHEET
C	12.16.15		GENERAL REVISION
D	06.09.16		REV. PER RER COMMENTS

date: 07-22-11
scale: 1/2" = 1"
dr. by: HAMID
chk. by:

drawing no.
W11-41

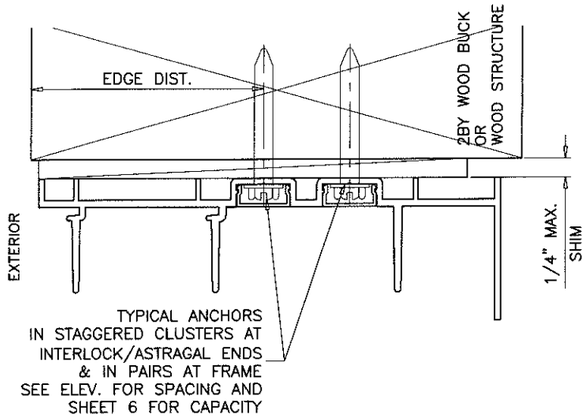

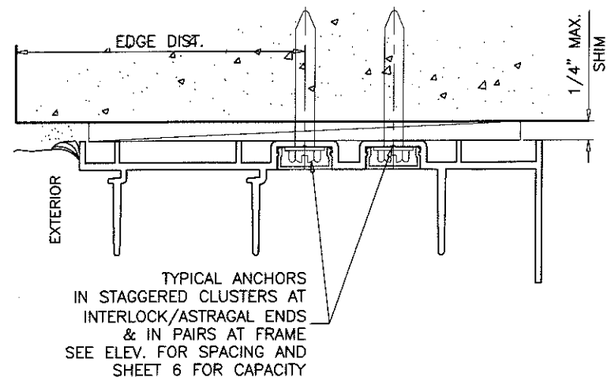

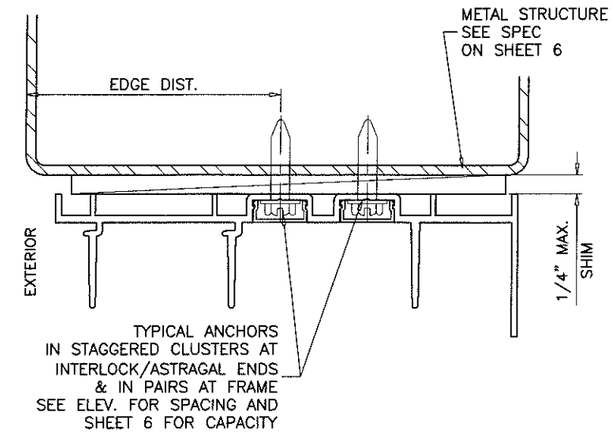

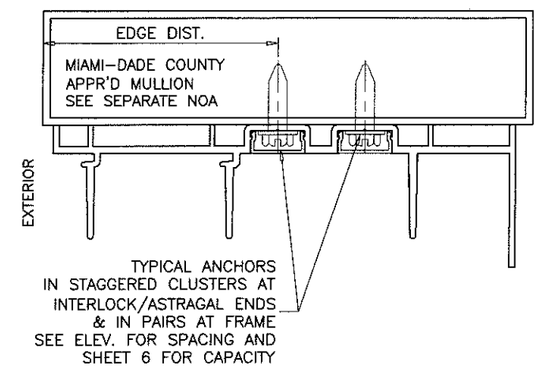

PROPERLY SECURED 1BY OR 2BY WOOD BUCKS AND METAL STRUCTURES NOT BY E.S. WINDOWS MUST SUPPORT LOADS IMPOSED BY GLAZING SYSTEM AND TRANSFER THEM TO THE BUILDING STRUCTURE.

PRODUCT REVISED
as complying with the Florida Building Code
Acceptance No 15-0430.04
Expiration Date 11/14/18
Miami-Dade Product Control

JUL 01 2016

JAWAD AHMAD
LICENSE
No. 70592
STATE OF FLORIDA
PROFESSIONAL ENGINEER

AL-FAROOQ CORPORATION
ENGINEERS & PRODUCT DEVELOPMENT
9360 SUNSET DRIVE, SUITE 220
MIAMI, FLORIDA 33173
TEL. (305) 264-8100 FAX. (305) 262-6978
(C.A.N. 3538)
COMP-ANL\W11-41ES

SERIES-6000 ALUM SLIDING GLASS DOOR (L.M.I.)

E.S. WINDOWS, LLC
3550 N.W. 49 STREET
MIAMI, FL. 33142
TEL. (305) 638-5151 FAX. (305) 638-5158

revisions:

no	date	by	description
A	12.28.11		REV. PER BCCO COMMENTS
B	06.13.14		NO CHANGE THIS SHEET
C	12.16.15		GENERAL REVISION
D	06.09.16		REV. PER RER COMMENTS

date: 07-22-11
scale: 1/2" = 1"
dr. by: HAMID
chk. by:

drawing no.
W11-41

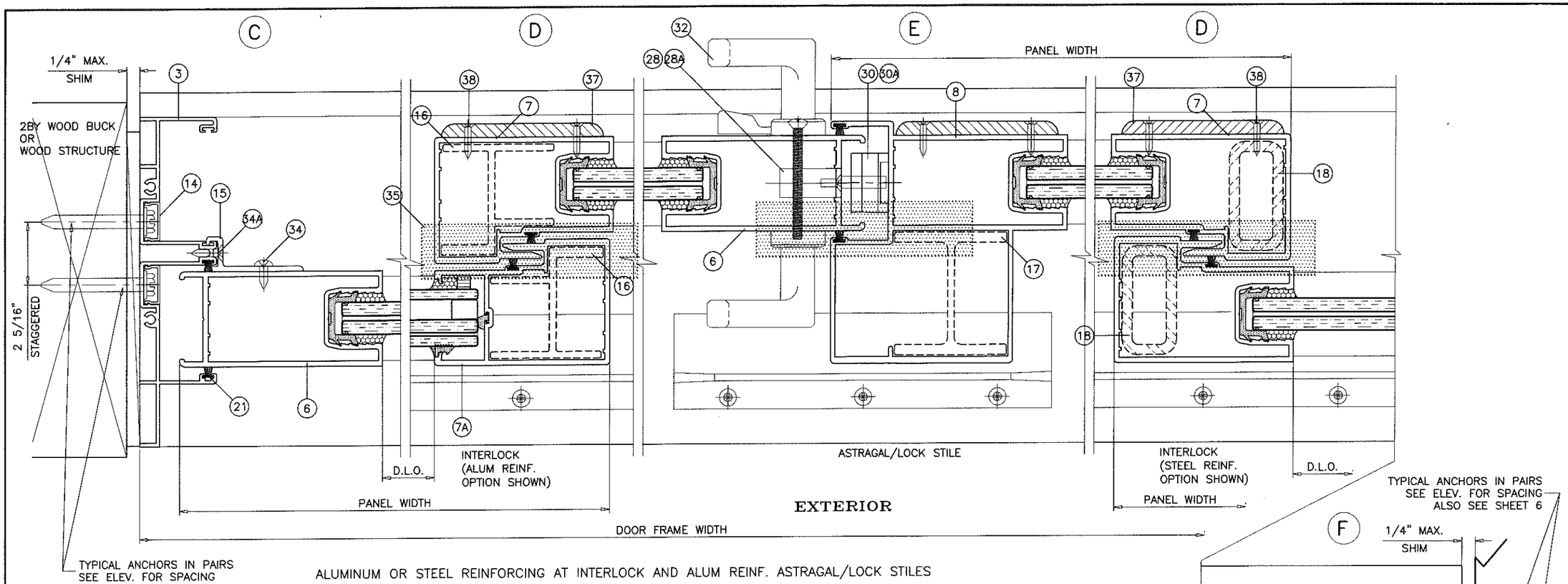

ALUMINUM OR STEEL REINFORCING AT INTERLOCK AND ALUM REINF. ASTRAGAL/LOCK STILES SHOWN FOR ILLUSTRATION ONLY.
USE AS SHOWN ON SHEETS 4 & 5.
SEE CHARTS FOR REINFORCING OPTIONS LOAD CAPACITY, INCLUDING GLASS OPTIONS.
SEE ELEVATION FOR ANCHOR SPACING AND SHEET 6 FOR ANCHOR CAPACITY.

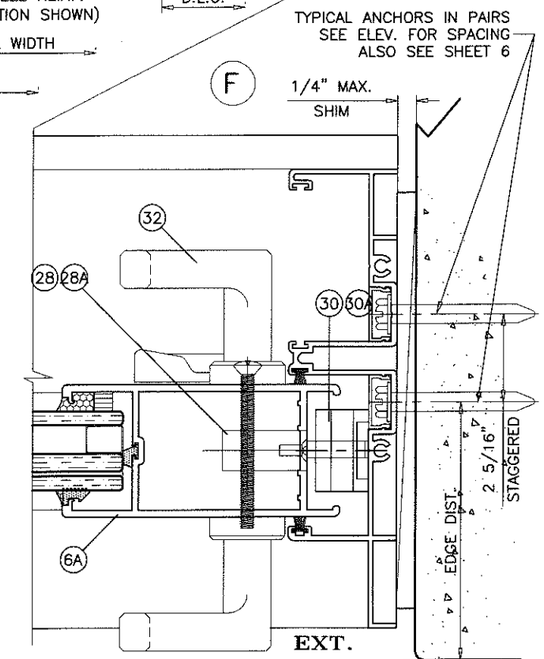

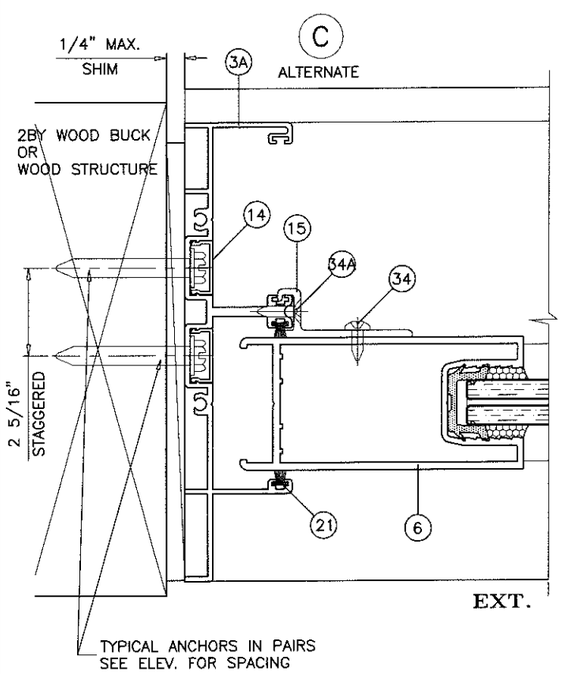

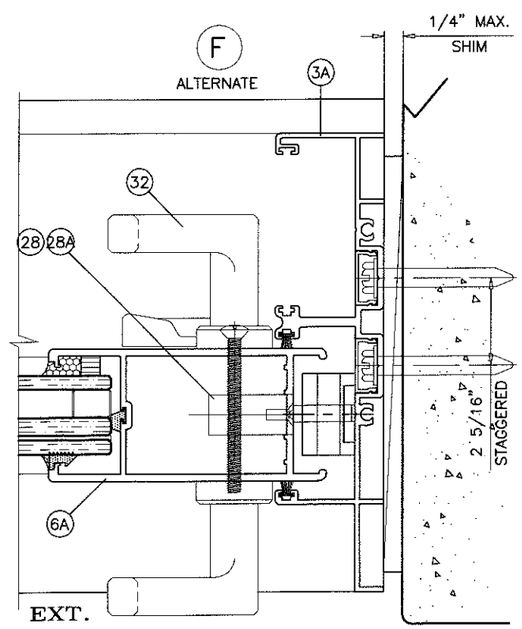

PRODUCT REVISED
as complying with the Florida
Building Code
Acceptance No 15-0430.04
Expiration Date 1/19/18
By Ishwar J. Chandra
Miami Dade Product Control

JUL 01 2016

JAVAD AHMAD
LICENSE
No. 70592
STATE OF FLORIDA
PROFESSIONAL ENGINEER

AL-FAROOQ CORPORATION
ENGINEERS & PRODUCT DEVELOPMENT
9360 SUNSET DRIVE, SUITE 220
MIAMI, FLORIDA 33173 (C.A.N. 3538)
TEL. (305) 264-8100 FAX. (305) 262-6978
COMP-ANL\W11-41ES

SERIES-6000 ALUM SLIDING GLASS DOOR (L.M.I.)

E.S. WINDOWS, LLC
3550 N.W. 49 STREET
MIAMI, FL. 33142
TEL. (305) 638-5151 FAX. (305) 638-5158

revisions:

no	date	by	description
A	12.28.11		REV. PER BCCO COMMENTS
B	06.13.14		NO CHANGE THIS SHEET
C	12.16.15		GENERAL REVISION
D	06.09.16		REV. PER RER COMMENTS

date: 07-22-11
scale: 1/2" = 1"
dr. by: HAMID
chk. by:

drawing no.
W11-41

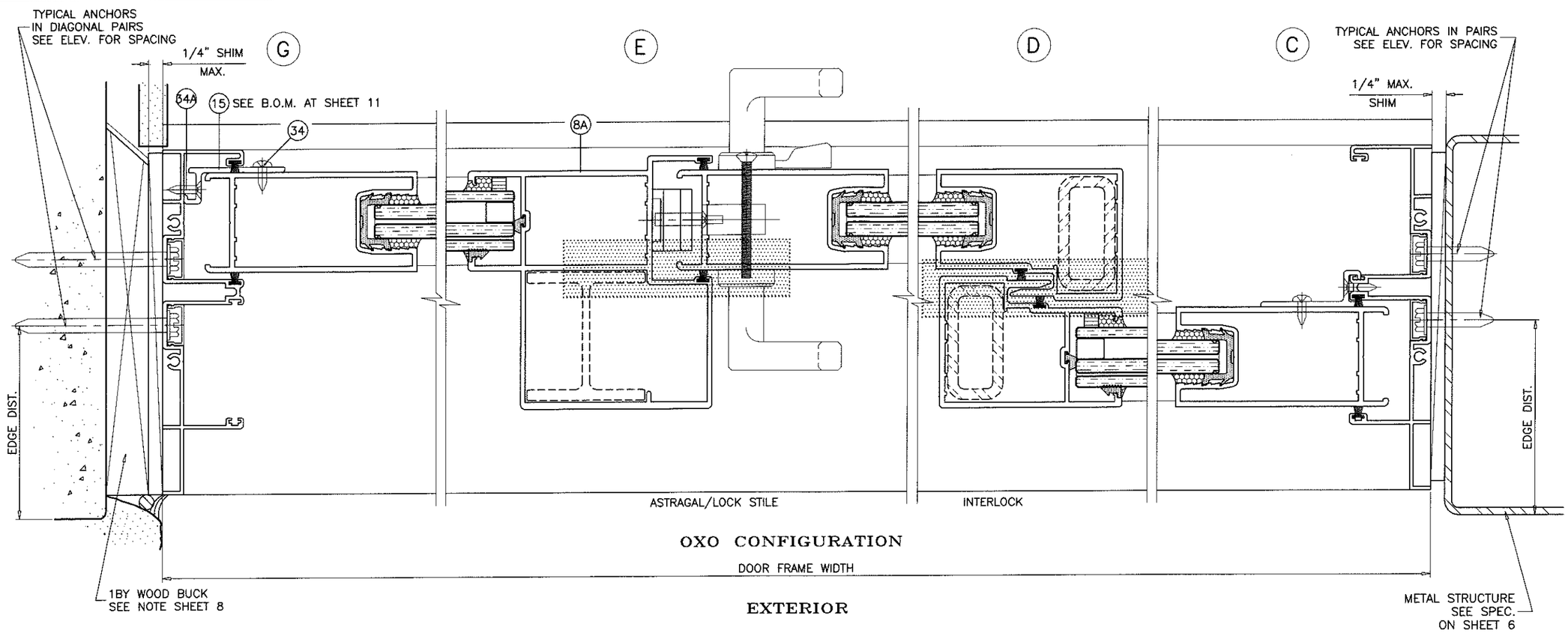

OXO CONFIGURATION

EXTERIOR

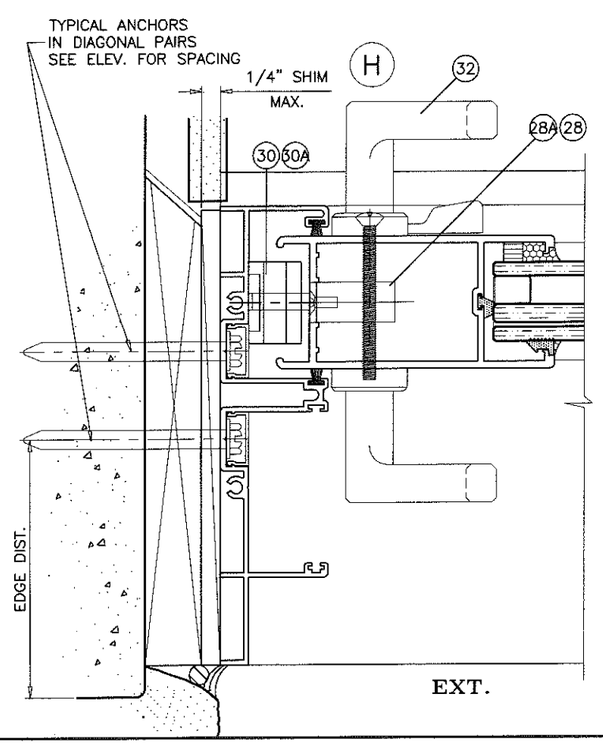

EXT.

PRODUCT REVISED
as complying with the Florida
Building Code
Acceptance No 15-0430.04
Expiration Date 1/14/18
Miami-Dade Product Control

ALUMINUM AND STEEL REINFORCING AT INTERLOCK AND ASTRAGAL/LOCK STILES
SHOWN FOR ILLUSTRATION ONLY.
USE AS SHOWN ON SHEETS 4 & 5.
SEE CHARTS FOR REINFORCING OPTIONS LOAD CAPACITY, INCLUDING GLASS OPTIONS.
SEE ELEVATION FOR ANCHOR SPACING AND SHEET 6 FOR ANCHOR CAPACITY.

JUL 01 2016

JAWAD AHMAD
LICENSE
No. 70592
STATE OF FLORIDA
PROFESSIONAL ENGINEER

AL-FAROOQ CORPORATION
ENGINEERS & PRODUCT DEVELOPMENT
9360 SUNSET DRIVE, SUITE 220
MIAMI, FLORIDA 33173 (C.A.N. 3538)
TEL. (305) 264-8100 FAX. (305) 262-6978

COMP-ANL\W11-41ES

SERIES-6000 ALUM SLIDING GLASS DOOR (L.M.I.)

E.S. WINDOWS, LLC
3550 N.W. 49 STREET
MIAMI, FL. 33142
TEL. (305) 638-5151 FAX. (305) 638-5158

revisions:

no	date	by	description
A	12.28.11		NO CHANGE THIS SHEET
B	06.13.14		NO CHANGE THIS SHEET
C	12.16.15		GENERAL REVISION
D	06.09.16		REV. PER RER COMMENTS

date: 07-22-11
scale: 1/2" = 1"
dr. by: HAMID
chk. by:

drawing no.
W11-41

ITEM #	PART #	QUANTITY	DESCRIPTION	MATERIAL	MANF./SUPPLIER/REMARKS
1	ES-6001	1	FRAME HEAD	6005-T5	–
2	ES-6023	1	FRAME SILL – 3-1/2"	6005-T5	–
3	ES-6003	2	FRAME JAMB	6063-T6	–
3A	ES6030	2	ALTERNATE FRAME JAMB	6063-T6	–
4	ES-6000-040	2/ PANEL	TOP RAIL (LAM. GLASS)	6063-T6	–
4A	ES-6004	2/ PANEL	TOP RAIL (INSUL. LAM. GLASS)	6063-T6	–
5	ES-6000-041	2/ PANEL	BOTTOM RAIL (LAM. GLASS)	6063-T6	–
5A	ES-6005	2/ PANEL	BOTTOM RAIL (INSUL. LAM. GLASS)	6063-T6	–
6	ES-6000-042	AS REQD.	LOCK STILE (LAM. GLASS)	6063-T6	–
6A	ES-6006	AS REQD.	LOCK STILE (INSUL. LAM. GLASS)	6063-T6	–
7	ES-6000-043	AS REQD.	INTERLOCK (LAM. GLASS)	6063-T6	–
7A	ES-6007	AS REQD.	INTERLOCK (INSUL. LAM. GLASS)	6063-T6	–
8	ES-6000-044	AS REQD.	FEMALE ASTRAGAL (LAM. GLASS)	6063-T6	–
8A	ES-6008	AS REQD.	FEMALE ASTRAGAL (INSUL. LAM. GLASS)	6063-T6	–
9	ES-6500-G01A	4/ PANEL	GLAZING GASKET (LAM. GLASS)	SILICONE	DUROMETER 65±5 SHORE A, EXTRUSIONES S.A.
11	ES-6016	4/ PANEL	PANEL GUIDE (TOP ONLY)	CELCON	–
12	ES-6015	2/ PANEL	FIXED PANEL BOTTOM CLIP , 7" LONG MIN.	6063-T6	SECURE W/ (2) #8 X 3/4" FH SMS
13	ES-6010	2/ PANEL	RETAINER CLIP, 6" LONG	6005-T5	AT MTG. RAIL HEAD & SILL ENDS
14	ES-6011	2/ JAMB	JAMB SCREW COVER	6063-T5	OPTIONAL
15	ES-6014	AS REQD.	FIXED PANEL CLIP, 4" LONG	6063-T6	AT 20" FROM EACH END AND 27" O.C. MAX.
16	ES-6012	AS REQD.	INTERLOCK STIFFENER (LENGTH = PANEL HT. – 2-3/8")	6063-T6	–
17	ES-6013	AS REQD.	ASTRAGAL STIFFENER (LENGTH = PANEL HT. – 2-3/8")	6063-T6	–
18	1" X 2" X 3/16"	AS REQD.	STEEL TUBE REINFORCING (LENGTH = PANEL HT. – 2-3/8")	A36 STEEL	TO BE PAINTED
21	W222521K	AS REQD.	STILE & JAMB W'STRIPPING	–	ULTRAFAB
22	W223221K	AS REQD.	TOP RAIL W'STRIPPING	–	ULTRAFAB
23	ES-6027	AS REQD.	BOTTOM RAIL W'STRIPPING	EPDM	DUROMETER 75±4 SHORE A
24	#10 X 1-1/2" PH SMS	8/ PANEL	PANEL ASSY SCREWS	–	–
25	#10 X 1" PH SMS	2/ CORNER	FRAME ASSY SCREWS	–	–
26	–	2/ MOV. PANEL	ACETAL WHEELS IN METALLIC HOUSING	–	PANELS WITH LAM. GLASS TO HAVE SINGLE OR DUAL ROLLERS PANELS WITH INSUL. LAM. GLASS TO HAVE DUAL ROLLERS
27	1/4-20 X 1-3/4" PH MS	2/ ROLLER	ROLLER INST. SCREWS	–	–
28	191056	1/ MOV. PANEL	STD. MORTISE LOCK, AT 40" FROM BOTTOM	ST. STEEL	INTERLOCK (ASSA ABLOY)
28A	191014	1/ MOV. PANEL	MULTI POINT MORTISE LOCK, AT 40" FROM BOTTOM	ST. STEEL	INTERLOCK (ASSA ABLOY)
29	#10-24 X 3/8" PH MS	2/ LOCK	LOCK INSTALLATION SCREW	ST. STEEL	–
30	191018	1/ LOCK	LOCK KEEPER (STD. LOCK), AT 48-1/2" FROM BOTTOM	PLATED STEEL	INTERLOCK (ASSA ABLOY)
30A	191040	1/ LOCK	LOCK KEEPER (MULTI POINT LOCK), AT 48-1/2" FROM BOTTOM	ST. STEEL	INTERLOCK (ASSA ABLOY)
31	#10 X 5/8" PH SMS B	2/ LOCK	LOCK KEEPER MOUNT. SCREW (STD. LOCK)	ST. STEEL	–
31A	#8 X 3/4" FH SMS	4/ LOCK	LOCK KEEPER MOUNT. SCREW (MULTI POINT LOCK)	ST. STEEL	–
32	#623Z	1/ LOCK	INTERIOR AND EXTERIOR PULL	–	(3) #6-32 X 1/2" FH MS, ST. STEEL
34	#10 X 3/4" PH SDS	2/ CLIP	FIXED PANEL CLIP FASTENER	ST. STEEL	–
34A	#10 X 3/4" PH SDS	2/ CLIP	FIXED PANEL CLIP FASTENER	ST. STEEL	–
35	–	AS REQD.	1"X4" LONG SELF ADHESIVE PILE PAD	WOOLPILE	AT HEAD AND SILL
37	ES-6019	AS REQD.	RESTRAINING PLATE	NYLON	AT TOP & BOTT. INTERLOCKS & ASTRAGAL
38	#8 X 3/4" FH SMS	2/ PLATE	RESTRAINING PLATE FASTENER	–	–
39	ES-4013	AS REQD.	GLAZING WEDGE	–	–
41	ES-4014	AS REQD.	BOTTOM RAIL GLASS STOP	EPDM	DUROMETER 68±4 SHORE A
42	ES-4018	AS REQD.	TOP RAIL & STILES GLASS STOP	EPDM	DUROMETER 75±4 SHORE A
43	–	AS REQD.	1/4" X 1/4" GLAZING TAPE	FOAM	–
44	–	2/ LITE	SETTING BLOCK, 1" X 1/8" X 2-1/2" LONG	EPDM	DUROMETER 80±5 SHORE A
45	–	4/ LITE	BOX SPACER	ALUMINUM	–

LATCHES:
LIMIT ITEMS 28 AND 30 FOR USE WITH DOORS WITHOUT REINFORCING OPTION 1.
ITEMS 28A AND 30A CAN BE USED FOR ALL DOORS WITH OR WITHOUT REINFORCINGS.

PRODUCT REVISED
as complying with the Florida
Building Code
Acceptance No. 15-0430.04
Expiration Date 1/19/18
Mgr. Ind. Product Control

JUL 0 1 2016

JAVAD AHMAD
LICENSE
No. 70592
STATE OF
FLORIDA
PROFESSIONAL ENGINEER

AL-FAROOQ CORPORATION
ENGINEERS & PRODUCT DEVELOPMENT
9360 SUNSET DRIVE, SUITE 220
MIAMI, FLORIDA 33173 (C.A.N. 3538)
TEL. (305) 264-8100 FAX. (305) 262-6978

COMP-ANL\W11-41ES

SERIES-6000 ALUM SLIDING GLASS DOOR (L.M.I.)

E.S. WINDOWS, LLC
3550 N.W. 49 STREET
MIAMI, FL. 33142
TEL. (305) 638-5151 FAX. (305) 638-5158

revisions:

no	date	by	description
A	12.28.11		REV. PER BCCO COMMENTS
B	06.13.14		ROLLERS REV.
C	12.16.15		GENERAL REVISION
D	06.09.16		NO CHANGE THIS SHEET

date: 07-22-11
scale: 1/2" = 1"
dr. by: HAMID
chk. by:

drawing no.
W11-41

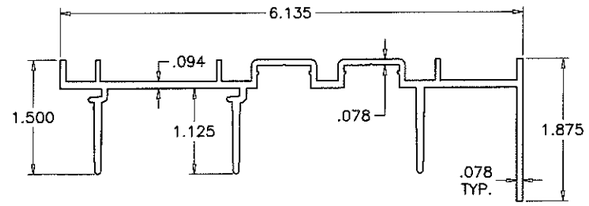

1 FRAME HEAD

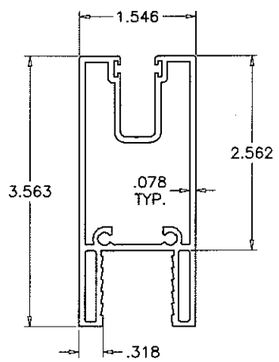

4 PANEL TOP RAIL (LAM. GLASS)

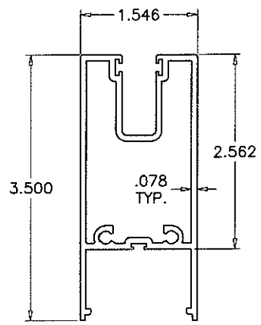

4A PANEL TOP RAIL (INSUL. LAM. GLASS)

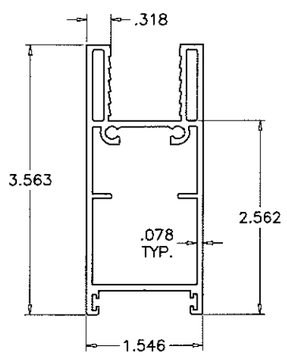

5 PANEL BOTTOM RAIL (LAM. GLASS)

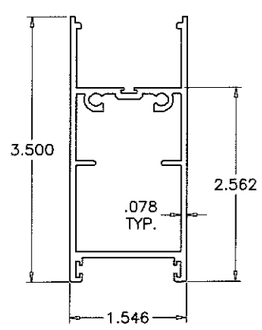

5A PANEL BOTTOM RAIL (INSUL. LAM. GLASS)

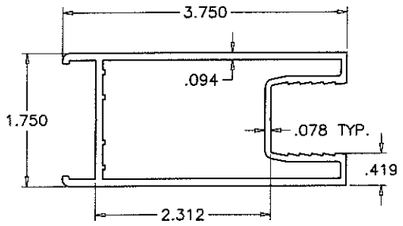

6 LOCK STILE (LAM. GLASS)

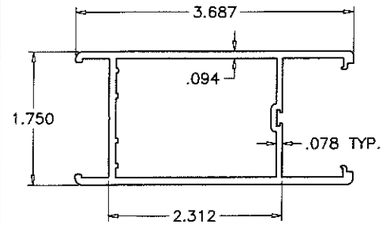

6A LOCK STILE (INSUL. LAM. GLASS)

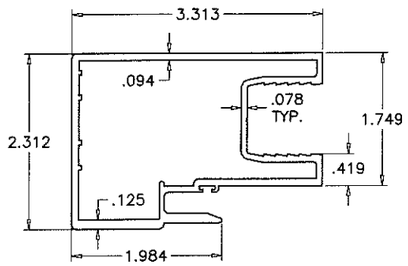

7 INTERLOCK STILE (LAM. GLASS)

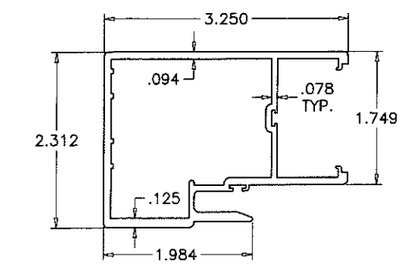

7A INTERLOCK STILE (INSUL. LAM. GLASS)

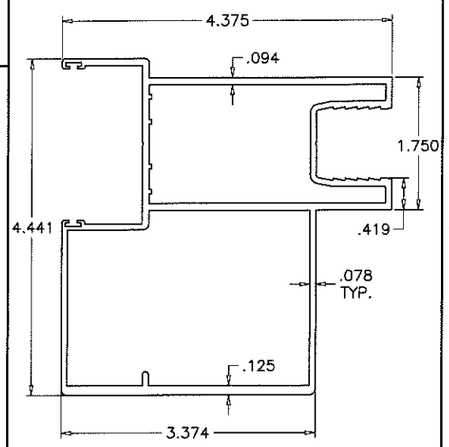

8 ASTRAGAL STILE (LAM. GLASS)

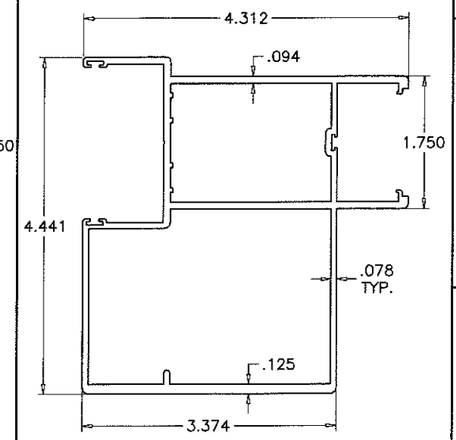

8A ASTRAGAL STILE (INSUL. LAM. GLASS)

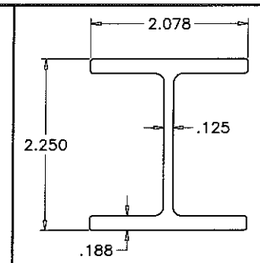

17 ASTRAGAL STIFFENER

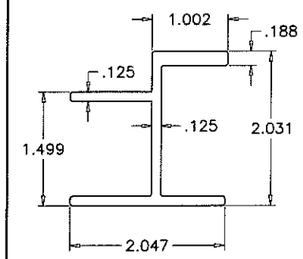

16 INTERLOCK STIFFENER

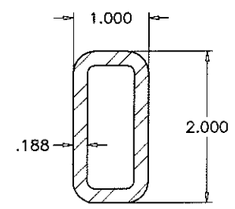

18 INTERLOCK REINFORCING

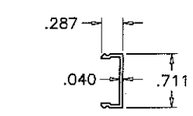

14 SCREW COVER

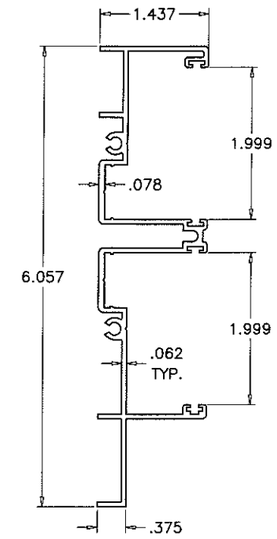

3 FRAME JAMB

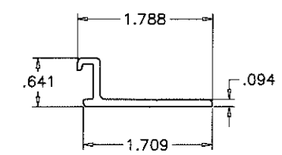

15 FIXED PANEL CLIP

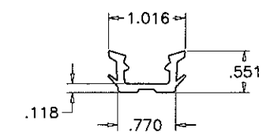

9 GLAZING GASKET (LAMINATED GLASS)

BASE POLYMER = EPDM RUBBER
DENSITY = 10.26 Lbs/Gal
HARDNESS = 70±5
TENSILE STRENGTH = 905 PSI
ELONGATION AT BREAK = 273%
TEAR STRENGTH = 1.343 Kip/ft
BRITTLENESS TEMPERATURE = −40° F
COMPRESSION SET = 27% (22h@158°F)

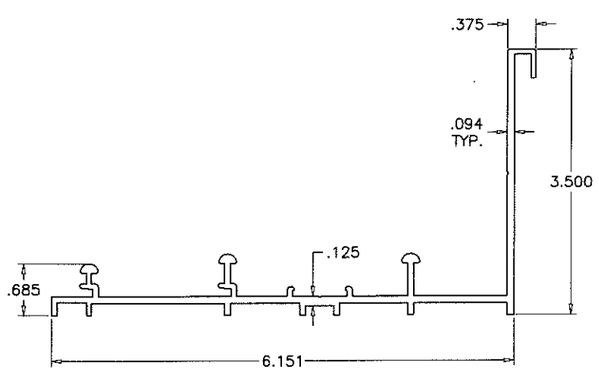

2 FRAME SILL

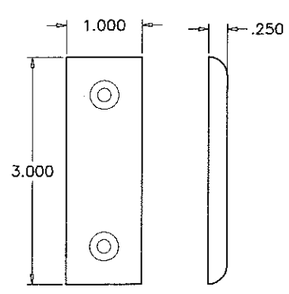

37 RESTRAINING PLATE

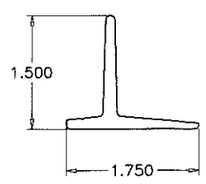

13 RETAINER CLIP

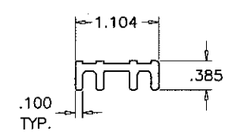

12 FIX. PANEL BOTTOM CLIP

PRODUCT REVISED
as complying with the Florida
building Code
Acceptance No. 15-0430-04
Expiration Date 1/19/18
By [illegible]
Miami-Dade Product Control

JUL 01 2016

JAVAD AHMAD
LICENSE
No. 70592
STATE OF FLORIDA
PROFESSIONAL ENGINEER

AL-FAROOQ CORPORATION
ENGINEERS & PRODUCT DEVELOPMENT
9360 SUNSET DRIVE, SUITE 220
MIAMI, FLORIDA 33173
(C.A.N. 3538)
TEL. (305) 264-8100 FAX. (305) 262-6978

COMP-ANL\W11-41ES

SERIES-6000 ALUM SLIDING GLASS DOOR (L.M.I.)

E.S. WINDOWS, LLC
3550 N.W. 49 STREET
MIAMI, FL. 33142
TEL. (305) 638-5151 FAX. (305) 638-5158

revisions:

no	date	by	description
A	12.28.11		REV. PER BCCO COMMENTS
B	06.13.14		NO CHANGE THIS SHEET
C	12.16.15		GENERAL REVISION
D	06.09.16		REV. PER RER COMMENTS

date: 07-22-11
scale: 1/2" = 1"
dr. by: HAMID
chk. by:

drawing no. W11-41

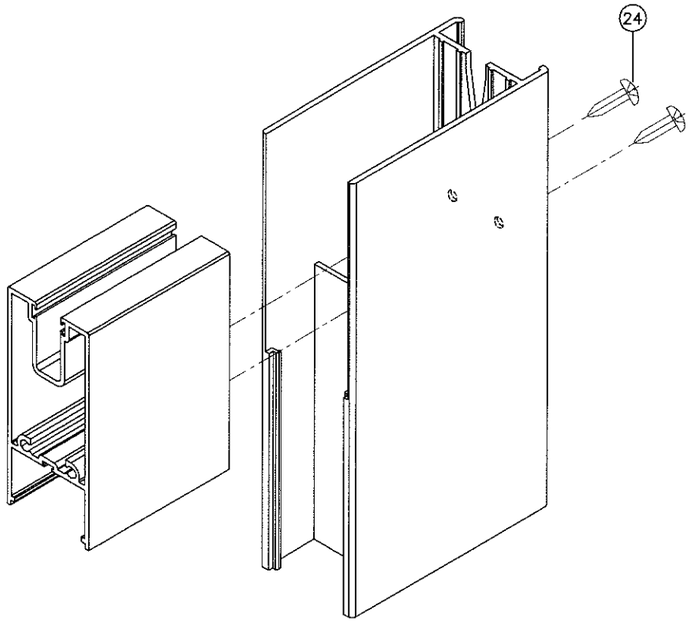

PANEL TOP CORNER
INSUL. LAM. GLASS RAIL & STILE (SHOWN)
LAM. GLASS RAIL & STILE (SIMILAR)

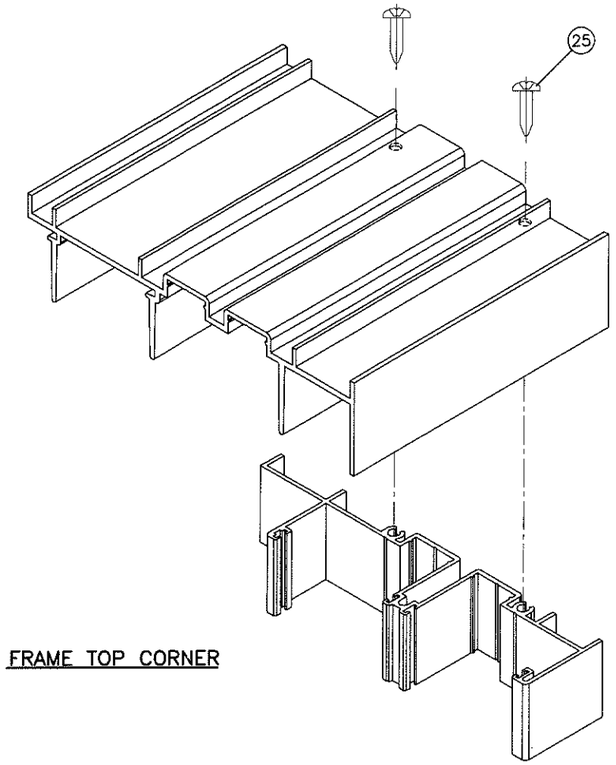

FRAME TOP CORNER

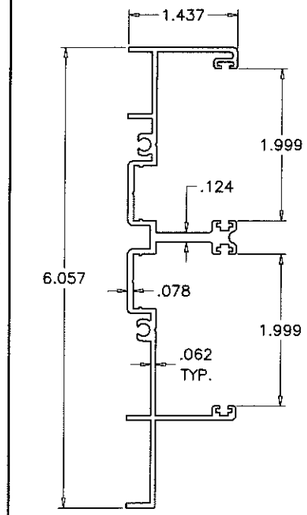

3A ALT. FRAME JAMB

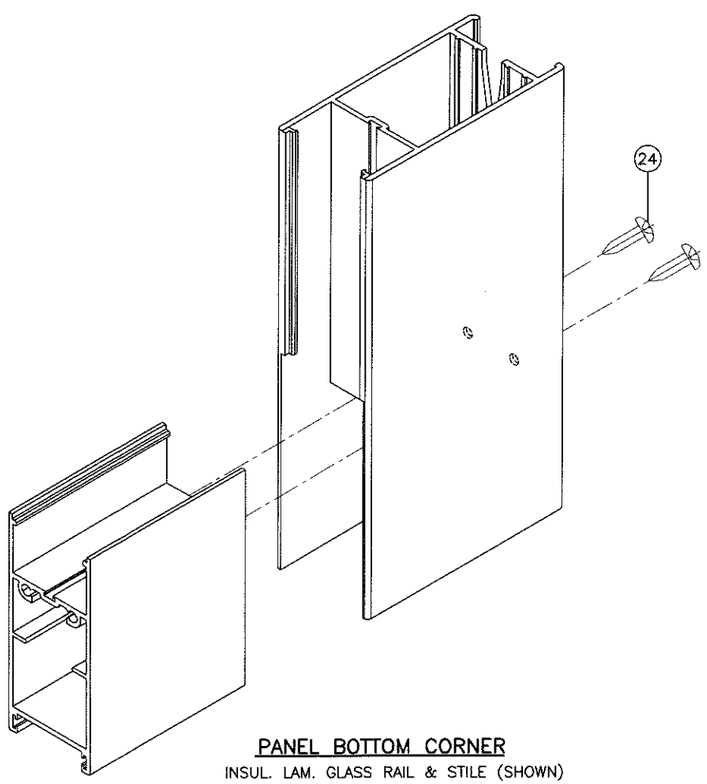

PANEL BOTTOM CORNER
INSUL. LAM. GLASS RAIL & STILE (SHOWN)
LAM. GLASS RAIL & STILE (SIMILAR)

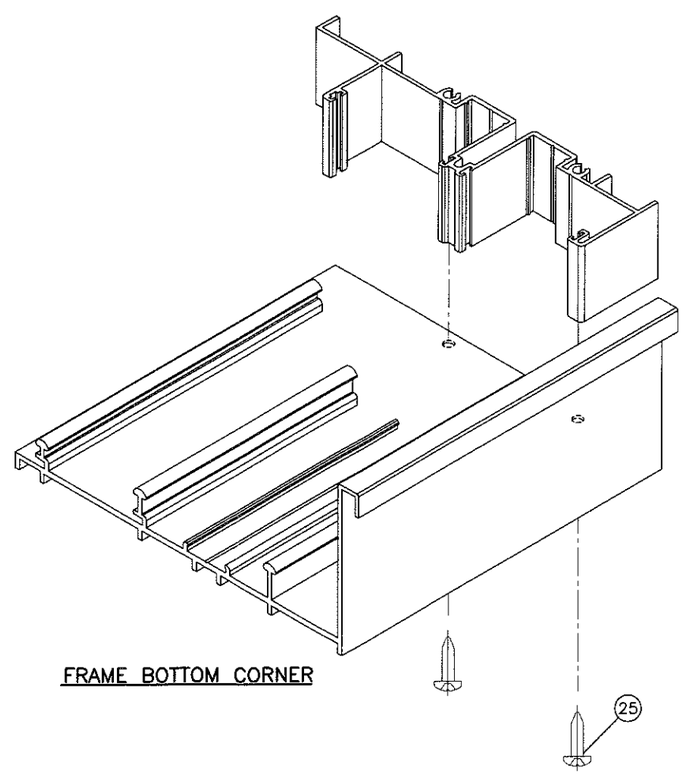

FRAME BOTTOM CORNER

PRODUCT REVISED
as complying with the Florida
Building Code
Acceptance No 15-0430.04
Expiration Date JAN 19, 2018
By [signature]
Miami Dade Product Control

JUL 01 2016

JAVAD AHMAD
LICENSE
No. 70592
STATE OF FLORIDA
PROFESSIONAL ENGINEER

AL-FAROOQ CORPORATION
ENGINEERS & PRODUCT DEVELOPMENT
9360 SUNSET DRIVE, SUITE 220
MIAMI, FLORIDA 33173 (C.A.N. 3538)
TEL. (305) 264-8100 FAX. (305) 262-6978

COMP-ANL\W11-41ES

SERIES-6000 ALUM SLIDING GLASS DOOR (L.M.I.)

E.S. WINDOWS, LLC
3550 N.W. 49 STREET
MIAMI, FL. 33142
TEL. (305) 638-5151 FAX. (305) 638-5158

revisions:

no	date	by	description
A	12.28.11		NO CHANGE THIS SHEET
B	06.13.14		NO CHANGE THIS SHEET
C	12.16.15		GENERAL REVISION
D	06.09.16		NO CHANGE THIS SHEET

date: 07-22-11
scale: 1/2" = 1"
dr. by: HAMID
chk. by:

drawing no.
W11-41