MIAMI-DADE COUNTY
DEPARTMENT OF REGULATORY AND ECONOMIC RESOURCES (RER)
BOARD AND CODE ADMINISTRATION DIVISION

MIAMI-DADE COUNTY
PRODUCT CONTROL SECTION
11805 SW 26 Street, Room 208
T (786) 315-2590 F (786) 315-2599
www.miamidade.gov/economy

NOTICE OF ACCEPTANCE (NOA)

ES Windows LLC
3550 NW 40th Street
Miami, FL 33142

SCOPE:

This NOA is being issued under the applicable rules and regulations governing the use of construction materials. The documentation submitted has been reviewed and accepted by Miami-Dade County RER-Product Control Section to be used in Miami-Dade County and other areas where allowed by the Authority Having Jurisdiction (AHJ).

This NOA shall not be valid after the expiration date stated below. The Miami-Dade County Product Control Section (In Miami-Dade County) and/ or the AHJ (in areas other than Miami-Dade County) reserve the right to have this product or material tested for quality assurance purposes. If this product or material fails to perform in the accepted manner, the manufacturer will incur the expense of such testing and the AHJ may immediately revoke, modify, or suspend the use of such product or material within their jurisdiction. RER reserves the right to revoke this acceptance, if it is determined by Miami-Dade County Product Control Section that this product or material fails to meet the requirements of the applicable building code.

This product is approved as described herein, and has been designed to comply with the Florida Building Code, including the High Velocity Hurricane Zone.

DESCRIPTION: Series "7000" Aluminum Window Wall System - L.M.I.

APPROVAL DOCUMENT: Drawing No. **W08-34**, titled "Series 7000 Alum. Window Wall System (L.M.I.)", sheets 1, 2, 3, 3.1, 4, 4.1, 5, 6 through 13 and 13.1 of 13, dated 04/24/13, with revision C dated 07/29/15, prepared by Al-Farooq Corporation, signed and sealed by Javad Ahmad, P.E., bearing the Miami-Dade County Product Control Revision stamp with the Notice of Acceptance number and expiration date by the Miami-Dade County Product Control Section.

MISSILE IMPACT RATING: Large and Small Missile Impact Resistant

LABELING: Each unit shall bear a permanent label with the manufacturer's name or logo, city, state, model/ series, and following statement: "Miami-Dade County Product Control Approved", unless otherwise noted herein.

RENEWAL of this NOA shall be considered after a renewal application has been filed and there has been no change in the applicable building code negatively affecting the performance of this product.

TERMINATION of this NOA will occur after the expiration date or if there has been a revision or change in the materials, use, and/ or manufacture of the product or process. Misuse of this NOA as an endorsement of any product, for sales, advertising or any other purposes shall automatically terminate this NOA. Failure to comply with any section of this NOA shall be cause for termination and removal of NOA.

ADVERTISEMENT: The NOA number preceded by the words Miami-Dade County, Florida, and followed by the expiration date may be displayed in advertising literature. If any portion of the NOA is displayed, then it shall be done in its entirety.

INSPECTION: A copy of this entire NOA shall be provided to the user by the manufacturer or its distributors and shall be available for inspection at the job site at the request of the Building Official.

This NOA **revises NOA No. 13-0115.04** and consists of this page 1 and evidence pages E-1 and E-2, as well as approval document mentioned above.

The submitted documentation was reviewed by **Manuel Perez, P.E.**

MIAMI-DADE COUNTY APPROVED

8/11/15

NOTICE OF ACCEPTANCE: EVIDENCE SUBMITTED

A. DRAWINGS

1. Manufacturer's die drawings and sections.
   (Submitted under previous NOA No. 13-0115.04)
2. Drawing No. **W08-34**, titled "Series 7000 Alum. Window Wall System (L.M.I.)", sheets 1, 2, 3, 3.1, 4, 4.1, 5, 6 through 13 and 13.1 of 13, dated 04/24/13, with revision C dated 07/29/15, prepared by Al-Farooq Corporation, signed and sealed by Javad Ahmad, P.E.

B. TESTS

1. Test reports on: 1) Air Infiltration Test, per FBC, TAS 202-94
   2) Uniform Static Air Pressure Test, Loading per FBC TAS 202-94
   3) Water Resistance Test, per FBC, TAS 202-94
   4) Large Missile Impact Test per FBC, TAS 201-94
   5) Cyclic Wind Pressure Loading per FBC, TAS 203-94
   along with marked-up drawings and installation diagram of a series ES-7000 aluminum window wall system, prepared by Fenestration Testing Laboratory, Inc., Test Report No. **FTL-8100**, dated 12/04/14, signed and sealed by Idalmis Ortega, P.E.
2. Test reports on: 1) Safety Performance Test, (Drop Test) per ANSI Z97.1-2009 along with marked-up drawings and installation diagram of a series ES-7000 aluminum window wall system and a series ES-7100 aluminum window wall system, prepared by Fenestration Testing Laboratory, Inc., Test Report No. **FTL-7862**, dated 07/25/14 and revised on 07/13/15, signed and sealed by Idalmis Ortega, P.E.
3. Test reports on: 1) Air Infiltration Test, per FBC, TAS 202-94
   2) Uniform Static Air Pressure Test, Loading per FBC TAS 202-94
   3) Water Resistance Test, per FBC, TAS 202-94
   4) Large Missile Impact Test per FBC, TAS 201-94
   5) Cyclic Wind Pressure Loading per FBC, TAS 203-94
   along with marked-up drawings and installation diagram of a series ES-7000 aluminum window wall system, prepared by Fenestration Testing Laboratory, Inc., Test Report No. **FTL-6922**, dated 01/03/13, signed and sealed by Marlin D. Brinson, P.E.
   (Submitted under previous NOA No. 13-0115.04)

C. CALCULATIONS

1. Anchor verification calculations and structural analysis, complying with **FBC 5th Edition (2014)**, dated 06/10/15, prepared by Al-Farooq Corporation, signed and sealed by Javad Ahmad, P.E.
2. Glazing complies with **ASTM E1300-09**

Manuel Perez

Manuel Perez, P.E.
Product Control Examiner
NOA No. 15-0430.05
Expiration Date: July 25, 2018
Approval Date: August 20, 2015

NOTICE OF ACCEPTANCE: EVIDENCE SUBMITTED

D. QUALITY ASSURANCE

1. Miami-Dade Department of Regulatory and Economic Resources (RER).

E. MATERIAL CERTIFICATIONS

1. Notice of Acceptance No. **14-0916.11** issued to **Kuraray America, Inc.** for their **"SentryGlas® (Clear and White) Glass Interlayers"** dated 06/25/15, expiring on 07/04/18.

F. STATEMENTS

1. Statement letter of conformance, complying with **FBC 5th Edition (2014)**, and of no financial interest, dated June 16, 2015, issued by Al-Farooq Corporation, signed and sealed by Javad Ahmad, P.E.

G. OTHERS

1. Notice of Acceptance No. **13-0115.04**, issued to ES Windows, LLC for their Series "7000" Aluminum Window Wall System - L.M.I., approved on 07/25/13 and expiring on 07/25/18.

Manuel Perez, P.E.
Product Control Examiner
NOA No. 15-0430.05
Expiration Date: July 25, 2018
Approval Date: August 20, 2015

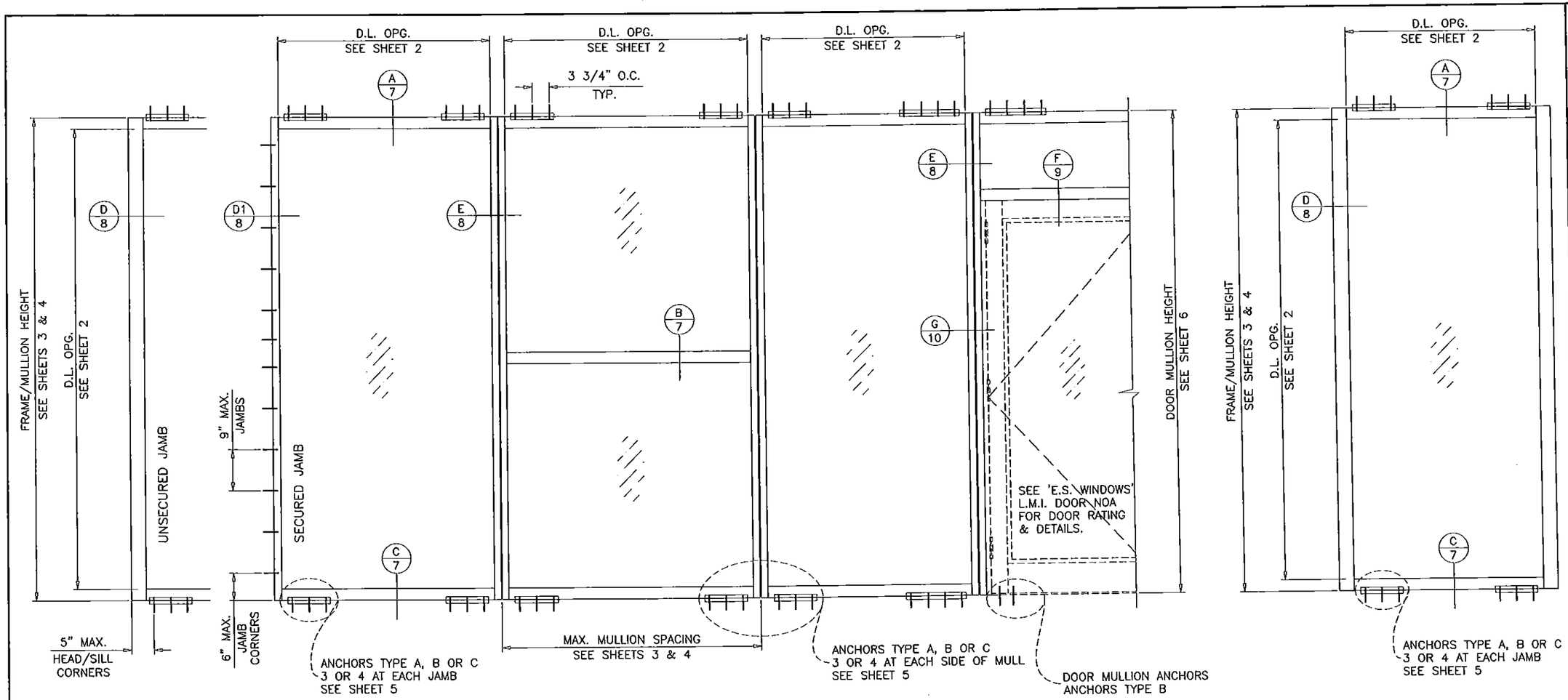

TYPICAL ELEVATIONS

THIS SYSTEM IS RATED FOR LARGE & SMALL MISSILE IMPACT.
SHUTTERS ARE NOT REQUIRED.

SERIES 7000 ALUMINUM WINDOW WALL SYSTEM

THIS SYSTEM MAY BE USED IN CONJUNCTION WITH MIAMI–DADE COUNTY APPR'D LARGE MISSILE IMPACT RESISTANT DOORS. LOWER DESIGN PRESSURE FROM STOREFRONT OR DOOR APPROVAL WILL APPLY TO ENTIRE SYSTEM.

CODE REQUIREMENTS FOR SAFEGUARDS MUST BE OBSERVED.

THIS PRODUCT HAS BEEN DESIGNED AND TESTED TO COMPLY WITH THE REQUIREMENTS OF THE FLORIDA BUILDING CODE INCLUDING HIGH VELOCITY HURRICANE ZONE (HVHZ).

ANCHORS SHALL BE AS LISTED, SPACED AS SHOWN ON DETAILS, ANCHORS EMBEDMENT TO BASE MATERIAL SHALL BE BEYOND WALL DRESSING OR STUCCO.

ANCHORING OR LOADING CONDITIONS NOT SHOWN IN THESE DETAILS ARE NOT PART OF THIS APPROVAL.

MATERIALS INCLUDING BUT NOT LIMITED TO STEEL/METAL SCREWS, THAT COME INTO CONTACT WITH OTHER DISSIMILAR MATERIALS SHALL MEET THE REQUIREMENTS OF THE FLORIDA BLDG. CODE.

INSTRUCTIONS:

USE CHARTS AS FOLLOWS.

STEP 1 DETERMINE DESIGN WIND PRESSURE REQUIREMENTS BASED ON WIND VELOCITY, BLDG. HEIGHT, WIND ZONE USING APPLICABLE ASCE 7 STANDARD.

STEP 2 SEE CHARTS ON SHEET 2 FOR GLASS DESIGN LOAD CAPACITY.

STEP 3 CHECK MULLION DESIGN LOAD CAPACITY FOR A GIVEN SPACING AND HEIGHT USING CHARTS ON SHEETS 3, 4 & 6 THE CAPACITY SHOULD EXCEED THE DESIGN LOAD.

STEP 4 USING CHARTS ON SHEET 5 SELECT ANCHOR OPTION WITH DESIGN LOAD CAPACITY MORE THAN DESIGN LOAD SPECIFIED IN STEP 1 ABOVE.

STEP 5 FOR SECURED JAMB OPTION CHECK JAMB ANCHOR CAPACITY USING CHART ON SHEET 8.

STEP 6 THE LOWEST VALUE RESULTING FROM STEPS 2, 3, 4 AND 5 THAT EXCEED THE DESIGN WIND PRESSURES DETERMINED THRU STEP 1 SHALL APPLY TO ENTIRE SYSTEM.

STEP 7 FOR SYSTEMS WITH UNANCHORED JAMBS, USING SHEET 11, DETERMINE THE MIN. & MAX. GAP DIMENSIONS.

STEP 8 WHEN USING THIS SYSTEM WITH DOORS, THE LOWER VALUE OF THE DESIGN PRESSURE RATING FOR THE SYSTEM AND THE DOOR SHALL APPLY.

PRODUCT COMPLIES WITH REQUIREMENTS OF ANSI Z97.1.

LAMINATED GLASS
INSUL. LAM. GLASS
LARGE MISSILE IMPACT

Engr: JAVAD AHMAD
CIVIL
FLA. PE # 70592
C.A.N. 3538

JUL 31 2015

PRODUCT REVISED
as complying with the Florida Building Code
Acceptance No 15-0430.05
Expiration Date July 25, 2018
By Manuel Perez
Miami-Dade Product Control

AL-FAROOQ CORPORATION
ENGINEERS & PRODUCT DEVELOPMENT
1235 S.W. 87 AVE
MIAMI, FLORIDA 33174
TEL. (305) 264-3100 FAX. (305) 262-6978

STORE\W08-34ES

SERIES 7000 ALUM WINDOW WALL SYSTEM (L.M.I.)

E.S. WINDOWS, LLC
3550 N.W. 49 STREET
MIAMI, FL. 33142
TEL (305) 638-5151 FAX. (305) 638-5158

revisions:

no	date	by	description
A	06.19.13		REV. PER RER COMMENTS
B	04.03.15		UPDATED TO 2014 FBC
C	07.29.15		NO CHANGE THIS SHEET

date: 04-24-13
scale: 1/2"=1'-0"
dr. by: HAMID
chk. by:

drawing no.
W08-34

GLASS DESIGN LOAD CAPACITY - PSF			
NOMINAL DIMS.		GLASS TYPE 'A'	GLASS TYPE 'B'
D.L.O. WIDTH	D.L.O. HEIGHT	EXT. (+) INT. (-)	EXT. (+) INT. (-)
36	96"	150.0	150.0
39		150.0	150.0
42		150.0	150.0
45 1/2		150.0	150.0
48		150.0	150.0
51		150.0	150.0
54		140.0	140.0
57		140.0	140.0
36"	100"	150.0	150.0
39		150.0	150.0
42		150.0	150.0
45 1/2		150.0	150.0
48"		150.0	150.0
51		140.0	140.0
54		140.0	140.0
57		140.0	140.0
36"	104"	150.0	150.0
39		150.0	150.0
42		150.0	150.0
45 1/2		150.0	150.0
48"		150.0	150.0
51		140.0	140.0
54		140.0	140.0
57		140.0	140.0
36	108"	150.0	150.0
39		150.0	150.0
42		150.0	150.0
45 1/2		150.0	150.0
48"		140.0	140.0
51		140.0	140.0
54		140.0	140.0
57		135.0	110.0
36	112"	150.0	150.0
39		150.0	150.0
42		150.0	150.0
45 1/2		140.0	140.0
48"		140.0	140.0
51		140.0	140.0
54		138.0	140.0
36	116"	150.0	150.0
39		150.0	150.0
42		150.0	150.0
45 1/2		140.0	140.0
48"		140.0	140.0
51		140.0	140.0
54		136.0	110.0
36	120"	150.0	150.0
39		150.0	150.0
42		150.0	150.0
45 1/2		140.0	140.0
48"		140.0	140.0
51		140.0	110.0

GLASS DESIGN LOAD CAPACITY - PSF			
NOMINAL DIMS.		GLASS TYPE 'A'	GLASS TYPE 'B'
D.L.O. WIDTH	D.L.O. HEIGHT	EXT. (+) INT. (-)	EXT. (+) INT. (-)
36	124"	150.0	150.0
39		150.0	150.0
42		140.0	140.0
45 1/2		140.0	140.0
48"		140.0	140.0
51		140.0	110.0
36	128"	150.0	150.0
39		150.0	150.0
42		140.0	140.0
45 1/2		140.0	133.4
48"		140.0	110.0
36	132"	150.0	150.0
39		140.0	140.0
42		140.0	140.0
45 1/2		140.0	140.0
48"		140.0	110.0
36	136"	150.0	150.0
39		140.0	140.0
42		140.0	140.0
45 1/2		140.0	110.0
36	139"	150.0	150.0
39		140.0	140.0
42		140.0	140.0
45 1/2		140.0	110.0

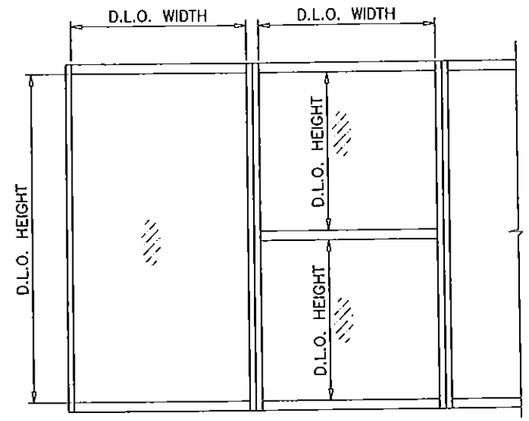

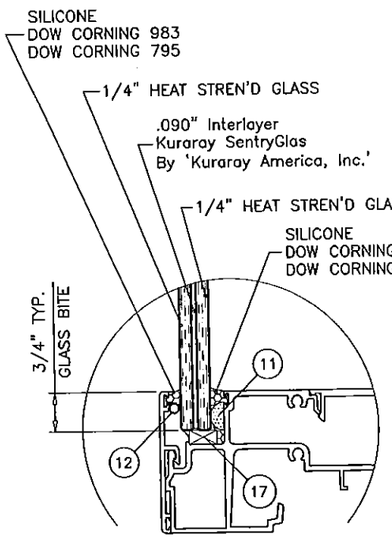

GLASS TYPE 'A'

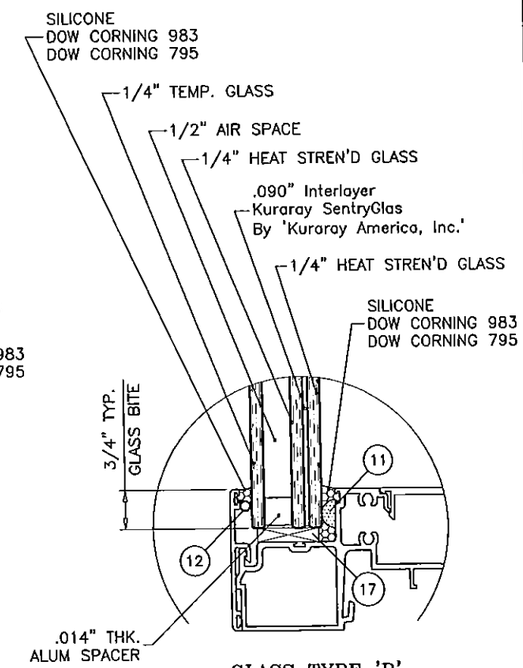

GLASS TYPE 'B'

GLAZING OPTIONS

NOTE:
GLASS CAPACITIES ON THIS SHEET ARE BASED ON ASTM E1300-09 (3 SEC. GUSTS).

Engr: JAVAD AHMAD
CIVIL
FLA. PE # 70592
C.A.N. 3538

JUL 9 1 2015

PRODUCT REVISED
as complying with the Florida Building Code
Acceptance No 15-0430.05
Expiration Date July 25, 2018
By Manuel Perez
Miami Dade Product Control

AL-FAROOQ CORPORATION
ENGINEERS & PRODUCT DEVELOPMENT
1235 S.W. 87 AVE
MIAMI, FLORIDA 33174
TEL. (305) 264-8100 FAX. (305) 262-6978
STORE\W08-34ES

SERIES 7000 ALUM WINDOW WALL SYSTEM (L.M.I.)

E.S. WINDOWS, LLC
3550 N.W. 49 STREET
MIAMI, FL. 33142
TEL. (305) 638-5151 FAX. (305) 638-5158

revisions:

no	date	by	description
A	06.19.13		REV. PER RER COMMENTS
B	04.03.15		UPDATED TO 2014 FBC
C	07.29.15		REV. PER RER COMMENTS

date: 04-24-13
scale: 3/8" = 1"
dr. by: HAMID
chk. by:

drawing no.
W08-34

sheet 2 of 13

MULLION DESIGN LOAD CAPACITY – PSF CHART FOR LAMINATED GLASS MULLIONS WITHOUT INTERMEDIATE HORIZONTALS

NOMINAL DIMS.		JAMB 'J1' MULL 'M1'	
WIDTH (W)	FRAME HEIGHT	EXT. (+)	INT. (–)
30"	108"	125.0	125.0
36"		125.0	125.0
42"		125.0	125.0
48"		125.0	125.0
54"		125.0	125.0
60"		125.0	125.0
30"	114"	125.0	125.0
36"		125.0	125.0
42"		125.0	125.0
48"		125.0	125.0
54"		125.0	125.0
60"		119.0	119.0
30"	120"	125.0	125.0
36"		125.0	125.0
42"		125.0	125.0
48"		121.3	121.3
54"		109.8	109.8
60"		100.9	100.9
30"	126"	125.0	125.0
36"		125.0	125.0
42"		117.4	117.4
48"		104.2	104.2
54"		94.1	94.1
57"		89.9	89.9
30"	132"	125.0	125.0
36"		117.4	117.4
42"		101.7	101.7
48"		90.1	90.1
54"		81.3	81.3
30"	138"	121.9	121.9
36"		102.4	102.4
42"		88.7	88.7
48"		78.5	78.5
52"		73.1	73.1
30"	144"	107.2	107.2
36"		90.0	90.0
42"		77.8	77.8
48"		68.8	68.8

MULLION DESIGN LOAD CAPACITY – PSF CHART FOR LAMINATED GLASS MULLIONS WITHOUT INTERMEDIATE HORIZONTALS

NOMINAL DIMS.		JAMB 'J2' MULL 'M2'		JAMB 'J3' MULL 'M3'	
WIDTH (W)	FRAME HEIGHT	EXT. (+)	INT. (–)	EXT. (+)	INT. (–)
30"	96"	125.0	150.0	125.0	150.0
36"		125.0	150.0	125.0	150.0
42"		125.0	150.0	125.0	150.0
48"		125.0	150.0	125.0	150.0
54"		125.0	150.0	125.0	150.0
58"		125.0	150.0	125.0	150.0
60"		125.0	140.0	125.0	140.0
30"	102"	125.0	150.0	125.0	150.0
36"		125.0	150.0	125.0	150.0
42"		125.0	150.0	125.0	150.0
48"		125.0	150.0	125.0	150.0
54"		125.0	150.0	125.0	150.0
55"		125.0	150.0	125.0	150.0
60"		125.0	140.0	125.0	140.0
30"	108"	125.0	150.0	125.0	150.0
36"		125.0	150.0	125.0	150.0
42"		125.0	150.0	125.0	150.0
48"		125.0	150.0	125.0	150.0
52"		125.0	150.0	125.0	150.0
54"		125.0	140.0	125.0	140.0
60"		125.0	140.0	125.0	140.0
30"	114"	125.0	150.0	125.0	150.0
36"		125.0	150.0	125.0	150.0
42"		125.0	150.0	125.0	150.0
48"		125.0	150.0	125.0	150.0
49"		125.0	150.0	125.0	150.0
54"		125.0	140.0	125.0	140.0
60"		125.0	140.0	125.0	140.0
30"	120"	125.0	150.0	125.0	150.0
36"		125.0	150.0	125.0	150.0
42"		125.0	150.0	125.0	150.0
47"		125.0	150.0	125.0	150.0
48"		125.0	140.0	125.0	140.0
54"		125.0	138.6	125.0	140.0
57"		125.0	132.3	125.0	140.0
30"	126"	125.0	150.0	125.0	150.0
36"		125.0	150.0	125.0	150.0
42"		125.0	150.0	125.0	150.0
44"		125.0	150.0	125.0	150.0
48"		125.0	138.6	125.0	140.0
54"		124.8	124.8	125.0	140.0
30"	132"	125.0	150.0	125.0	150.0
36"		125.0	150.0	125.0	150.0
42"		125.0	142.2	125.0	150.0
48"		125.0	125.8	125.0	140.0
52"		117.0	117.0	125.0	140.0
30"	138"	125.0	150.0	125.0	150.0
36"		125.0	150.0	125.0	150.0
40"		125.0	135.9	125.0	150.0
42"		125.0	129.8	125.0	140.0
48"		114.6	114.6	125.0	140.0
50"		110.4	110.4	125.0	140.0
30"	144"	125.0	150.0	125.0	150.0
36"		125.0	137.7	125.0	150.0
39"		125.0	127.6	125.0	150.0
42"		118.9	118.9	125.0	140.0
48"		104.9	104.9	125.0	140.0

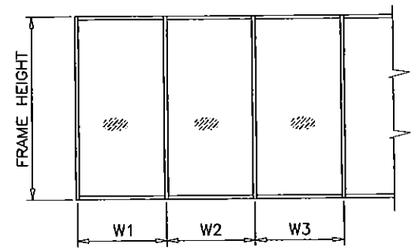

WIDTH (W) = W1
AT JAMB

WIDTH (W) = $\frac{W2 + W3}{2}$
AT MULLION

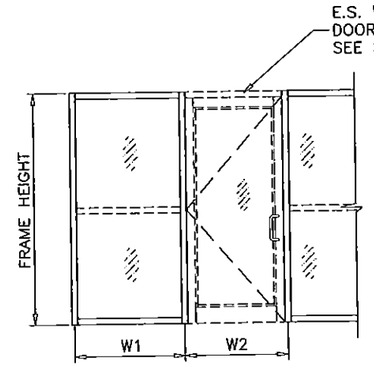

WIDTH (W) = $\frac{W1 + W2}{2}$
AT MULLION

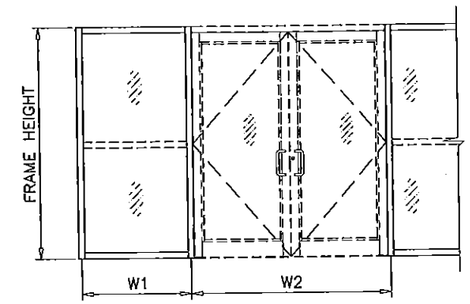

WIDTH (W) = $\frac{W1}{2} + \frac{W2}{4}$
AT MULLION

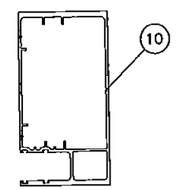

JAMB 'J1' & 'J2'

Ix IN^4	Sx IN^3
14.6111	4.6414

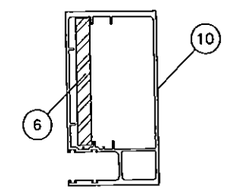

JAMB 'J3'

	Ix IN^4	Sx IN^3
ALUMINUM	14.6111	4.6414
STEEL	3.797	1.687
TOTAL Ix ALUM + Ix STL X 2.9	25.622	

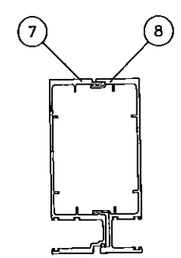

MULLION 'M1'

Ix IN^4	Sx IN^3
15.385	4.546

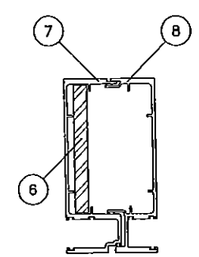

MULLION 'M2'

	Ix IN^4	Sx IN^3
ALUMINUM	15.385	4.546
STEEL	3.797	1.6875
TOTAL Ix ALUM + Ix STL X 2.9	26.396	

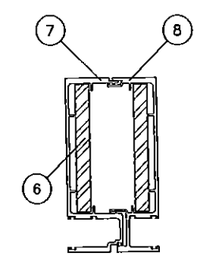

MULLION 'M3'

	Ix IN^4	Sx IN^3
ALUMINUM	15.385	4.546
STEEL	7.594	3.375
TOTAL Ix ALUM + Ix STL X 2.9	37.407	

NOTE:
INTERPOLATION BETWEEN WIDTHS ALLOWED.

Engr: JAVAD AHMAD
CIVIL
FLA. PE # 70592
C.A.N. 3538

PRODUCT REVISED
as complying with the Florida Building Code
Acceptance No 15-0430.05
Expiration Date July 25, 2018
By Manuel Perez
Miami Dade Product Control

AL-FAROOQ CORPORATION
ENGINEERS & PRODUCT DEVELOPMENT
1235 S.W. 87 AVE
MIAMI, FLORIDA 33174
TEL. (305) 264-8100 FAX. (305) 262-6978
STORE\W08-34ES

SERIES 7000 ALUM WINDOW WALL SYSTEM (L.M.I.)

E.S. WINDOWS, LLC
3550 N.W. 49 STREET
MIAMI, FL. 33142
TEL. (305) 638-5151 FAX. (305) 638-5158

revisions:

no	date	by	description
A	06.19.13		REV. PER RER COMMENTS
B	04.03.15		UPDATED TO 2014 FBC
C	07.29.15		NO CHANGE THIS SHEET

date: 04-24-13
scale: 3/8" = 1"
dr. by: HAMID
chk. by:

drawing no.
W08-34

sheet 3 of 13

MULLION DESIGN LOAD CAPACITY – PSF CHART FOR LAMINATED GLASS MULLIONS WITH INTERMEDIATE HORIZONTALS

NOMINAL DIMS.		JAMB 'J1' MULL 'M1'	
WIDTH (W)	FRAME HEIGHT	EXT. (+)	INT. (–)
30"	102"	125.0	125.0
36"		125.0	125.0
42"		125.0	125.0
48"		125.0	125.0
54"		125.0	125.0
60"		125.0	125.0
30"	108"	125.0	125.0
36"		125.0	125.0
42"		125.0	125.0
48"		125.0	125.0
54"		125.0	125.0
60"		123.0	123.0
30"	114"	125.0	125.0
36"		125.0	125.0
42"		125.0	125.0
48"		125.0	125.0
54"		118.2	118.2
60"		106.3	106.3
30"	120"	125.0	125.0
36"		125.0	125.0
42"		125.0	125.0
48"		114.0	114.0
54"		101.3	101.3
57"		96.0	96.0
30"	126"	125.0	125.0
36"		125.0	125.0
42"		112.5	112.5
48"		98.4	98.4
54"		87.5	87.5
30"	132"	125.0	125.0
36"		114.2	114.2
42"		97.9	97.9
48"		85.6	85.6
52"		79.0	79.0
30"	138"	119.9	119.9
36"		99.9	99.9
42"		85.6	85.6
48"		74.9	74.9
50"		71.9	71.9
30"	144"	105.5	105.5
36"		87.9	87.9
42"		75.4	75.4
48"		66.0	66.0

MULLION DESIGN LOAD CAPACITY – PSF CHART FOR LAMINATED GLASS MULLIONS WITH INTERMEDIATE HORIZONTALS

NOMINAL DIMS.		JAMB 'J2' MULL '2'		JAMB 'J3' MULL 'M3'	
WIDTH (W)	FRAME HEIGHT	EXT. (+)	INT. (–)	EXT. (+)	INT. (–)
30"	96"	125.0	150.0	125.0	150.0
36"		125.0	150.0	125.0	150.0
42"		125.0	150.0	125.0	150.0
48"		125.0	150.0	125.0	150.0
54"		125.0	150.0	125.0	150.0
58"		125.0	150.0	125.0	150.0
60"		125.0	140.0	125.0	140.0
30"	102"	125.0	150.0	125.0	150.0
36"		125.0	150.0	125.0	150.0
42"		125.0	150.0	125.0	150.0
48"		125.0	150.0	125.0	150.0
54"		125.0	150.0	125.0	150.0
55"		125.0	150.0	125.0	150.0
60"		125.0	140.0	125.0	140.0
30"	108"	125.0	150.0	125.0	150.0
36"		125.0	150.0	125.0	150.0
42"		125.0	150.0	125.0	150.0
48"		125.0	150.0	125.0	150.0
52"		125.0	150.0	125.0	150.0
54"		125.0	140.0	125.0	140.0
60"		125.0	140.0	125.0	140.0
30"	114"	125.0	150.0	125.0	150.0
36"		125.0	150.0	125.0	150.0
42"		125.0	150.0	125.0	150.0
48"		125.0	150.0	125.0	150.0
49"		125.0	150.0	125.0	150.0
54"		125.0	140.0	125.0	140.0
60"		125.0	129.1	125.0	140.0
30"	120"	125.0	150.0	125.0	150.0
36"		125.0	150.0	125.0	150.0
42"		125.0	150.0	125.0	150.0
47"		125.0	148.7	125.0	150.0
48"		125.0	140.0	125.0	140.0
54"		125.0	129.5	125.0	140.0
57"		122.6	122.6	125.0	140.0
30"	126"	125.0	150.0	125.0	150.0
36"		125.0	150.0	125.0	150.0
42"		125.0	150.0	125.0	150.0
44"		125.0	144.1	125.0	150.0
48"		125.0	132.1	125.0	140.0
54"		117.4	117.4	125.0	140.0
30"	132"	125.0	150.0	125.0	150.0
36"		125.0	150.0	125.0	150.0
42"		125.0	137.6	125.0	150.0
48"		120.4	120.4	125.0	140.0
52"		111.1	111.1	125.0	140.0
30"	138"	125.0	150.0	125.0	150.0
36"		125.0	146.8	125.0	150.0
40"		125.0	132.1	125.0	150.0
42"		125.0	125.8	125.0	140.0
48"		110.1	110.1	125.0	140.0
50"		105.7	105.7	125.0	140.0
30"	144"	125.0	150.0	125.0	150.0
36"		125.0	134.8	125.0	150.0
39"		124.5	124.5	125.0	150.0
42"		115.6	115.6	125.0	140.0
48"		101.1	101.1	125.0	140.0

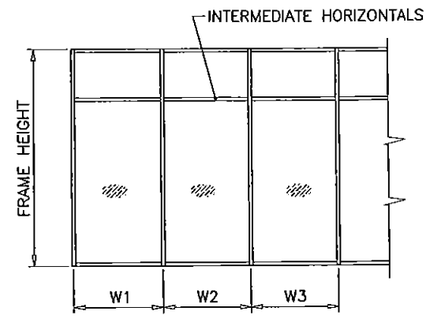

WIDTH (W) = W1
AT JAMB

WIDTH (W) = $\frac{W2 + W3}{2}$
AT MULLION

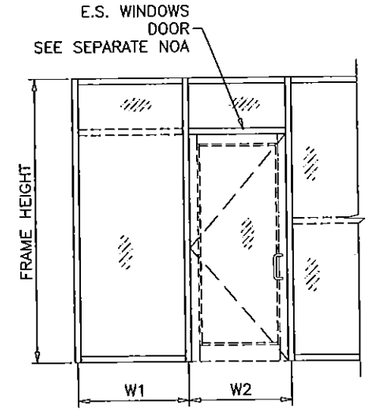

WIDTH (W) = $\frac{W1 + W2}{2}$
AT MULLION

NOTE:
INTERPOLATION BETWEEN WIDTHS ALLOWED.

Engr: JAVAD AHMAD
CIVIL
FLA. PE # 70592
C.A.N. 3538

PRODUCT REVISED
as complying with the Florida
Building Code
Acceptance No 15-0430.05
Expiration Date July 23, 2018
By Manuel Perez
Miami Dade Product Control

AL-FAROOQ CORPORATION
ENGINEERS & PRODUCT DEVELOPMENT
1235 S.W. 87 AVE
MIAMI, FLORIDA 33174
TEL. (305) 264-8100 FAX. (305) 262-6978
STORE\W08-34ES

SERIES 7000 ALUM WINDOW WALL SYSTEM (L.M.I.)

E.S. WINDOWS, LLC
3550 N.W. 49 STREET
MIAMI, FL. 33142
TEL. (305) 638-5151 FAX. (305) 638-5158

revisions:

no	date	by	description
A	06.19.13		REV. PER RER COMMENTS
B	04.03.15		UPDATED TO 2014 FBC
C	07.29.15		NO CHANGE THIS SHEET

date: 04-24-13
scale: 3/8" = 1"
dr. by: HAMID
chk. by:

drawing no.
W08-34

sheet 3.1 of 13

MULLION DESIGN LOAD CAPACITY – PSF
CHART FOR INSUL. LAM. GLASS MULLIONS
WITHOUT INTERMEDIATE HORIZONTALS

NOMINAL DIMS.		JAMB 'J1' MULL 'M1'	
WIDTH (W)	FRAME HEIGHT	EXT. (+)	INT. (–)
30"	114"	92.0	92.0
36"		92.0	92.0
42"		92.0	92.0
48"		92.0	92.0
54"		92.0	92.0
60"		92.0	92.0
30"	120"	92.0	92.0
36"		92.0	92.0
42"		92.0	92.0
48"		92.0	92.0
54"		92.0	92.0
57"		92.0	92.0
30"	126"	92.0	92.0
36"		92.0	92.0
42"		92.0	92.0
48"		92.0	92.0
54"		88.1	88.1
30"	132"	92.0	92.0
36"		92.0	92.0
42"		92.0	92.0
48"		84.4	84.4
52"		78.7	78.7
30"	138"	92.0	92.0
36"		92.0	92.0
42"		83.1	83.1
48"		73.5	73.5
50"		70.9	70.9
30"	144"	92.0	92.0
36"		84.3	84.3
42"		72.9	72.9
48"		64.5	64.5

MULLION DESIGN LOAD CAPACITY – PSF
CHART FOR INSUL. LAM. GLASS MULLIONS
WITHOUT INTERMEDIATE HORIZONTALS

NOMINAL DIMS.		JAMB 'J2' MULL 'M2'		JAMB 'J3' MULL 'M3'	
WIDTH (W)	FRAME HEIGHT	EXT. (+)	INT. (–)	EXT. (+)	INT. (–)
30"	96"	100.0	150.0	100.0	150.0
36"		100.0	150.0	100.0	150.0
42"		100.0	150.0	100.0	150.0
48"		100.0	150.0	100.0	150.0
54"		100.0	150.0	100.0	150.0
58"		100.0	150.0	100.0	150.0
60"		100.0	140.0	100.0	140.0
30"	102"	100.0	150.0	100.0	150.0
36"		100.0	150.0	100.0	150.0
42"		100.0	150.0	100.0	150.0
48"		100.0	150.0	100.0	150.0
54"		100.0	150.0	100.0	150.0
55"		100.0	150.0	100.0	150.0
60"		100.0	140.0	100.0	140.0
30"	108"	100.0	150.0	100.0	150.0
36"		100.0	150.0	100.0	150.0
42"		100.0	150.0	100.0	150.0
48"		100.0	150.0	100.0	150.0
52"		100.0	150.0	100.0	150.0
54"		100.0	140.0	100.0	140.0
60"		100.0	140.0	100.0	140.0
30"	114"	100.0	150.0	100.0	150.0
36"		100.0	150.0	100.0	150.0
42"		100.0	150.0	100.0	150.0
48"		100.0	150.0	100.0	150.0
49"		100.0	150.0	100.0	150.0
54"		100.0	140.0	100.0	140.0
58"		100.0	137.8	100.0	140.0
60"		100.0	110.0	100.0	110.0
30"	120"	100.0	150.0	100.0	150.0
36"		100.0	150.0	100.0	150.0
42"		100.0	150.0	100.0	150.0
47"		100.0	147.9	100.0	150.0
48"		100.0	140.0	100.0	140.0
54"		100.0	130.9	100.0	140.0
55"		100.0	128.9	100.0	140.0
57"		100.0	110.0	100.0	110.0
30"	126"	100.0	150.0	100.0	150.0
36"		100.0	150.0	100.0	150.0
42"		100.0	148.0	100.0	150.0
44"		100.0	141.8	100.0	150.0
48"		100.0	131.0	100.0	140.0
52"		100.0	121.9	100.0	140.0
54"		100.0	110.0	100.0	110.0
30"	132"	100.0	150.0	100.0	150.0
36"		100.0	150.0	100.0	150.0
42"		100.0	134.4	100.0	150.0
48"		100.0	118.8	100.0	140.0
50"		100.0	114.5	100.0	140.0
52"		100.0	110.0	100.0	110.0
30"	138"	100.0	150.0	100.0	150.0
36"		100.0	138.4	100.0	150.0
40"		100.0	125.4	100.0	150.0
42"		100.0	119.8	100.0	140.0
48"		100.0	106.0	100.0	138.6
50"		100.0	102.2	100.0	110.0
30"	144"	100.0	144.8	100.0	150.0
36"		100.0	121.5	100.0	150.0
39"		100.0	112.7	100.0	147.2
42"		100.0	110.0	100.0	110.0
48"		93.0	93.0	100.0	110.0

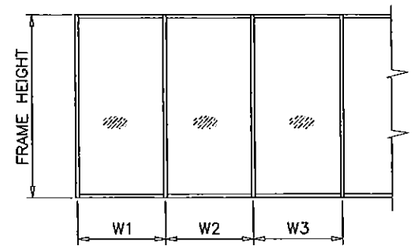

WIDTH (W) = W1
AT JAMB

WIDTH (W) = $\frac{W2 + W3}{2}$
AT MULLION

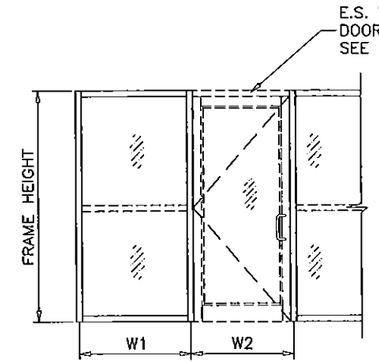

WIDTH (W) = $\frac{W1 + W2}{2}$
AT MULLION

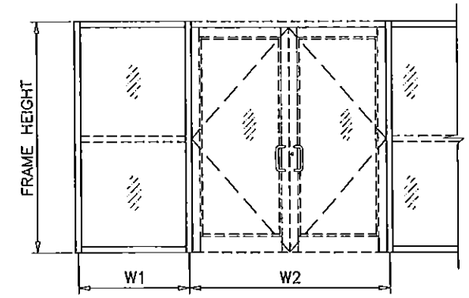

WIDTH (W) = $\frac{W1}{2} + \frac{W2}{4}$
AT MULLION

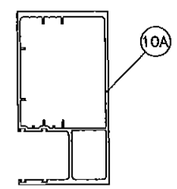

JAMB 'J1' & 'J2'

Ix IN^4	Sx IN^3
14.1989	4.5744

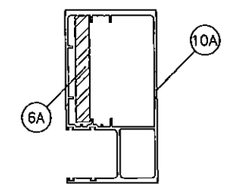

JAMB 'J3'

	Ix IN^4	Sx IN^3
ALUMINUM	14.1989	4.5744
STEEL	2.197	1.172
TOTAL Ix ALUM + Ix STL X 2.9	20.571	

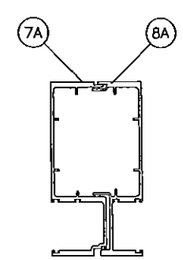

MULLION 'M1'

Ix IN^4	Sx IN^3
14.414	4.488

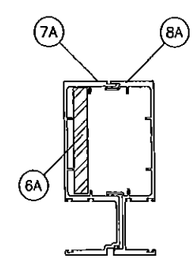

MULLION 'M2'

	Ix IN^4	Sx IN^3
ALUMINUM	14.414	4.488
STEEL	2.197	1.172
TOTAL Ix ALUM + Ix STL X 2.9	20.786	

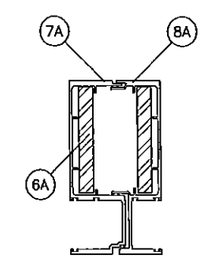

MULLION 'M3'

	Ix IN^4	Sx IN^3
ALUMINUM	14.414	4.488
STEEL	4.394	2.344
TOTAL Ix ALUM + Ix STL X 2.9	27.158	

NOTE:
INTERPOLATION BETWEEN WIDTHS ALLOWED.

Engr: JAVAD AHMAD
CIVIL
FLA. PE # 70592
C.A.N. 3538

PRODUCT REVISED
as complying with the Florida
Building Code
Acceptance No 15-0430.05
Expiration Date July 25, 2018
By Manuel Perez
Miami-Dade Product Control

AL-FAROOQ CORPORATION
ENGINEERS & PROJECT DEVELOPMENT
1235 S.W. 87 AVE
MIAMI, FLORIDA 33174
TEL. (305) 264-8100 FAX. (305) 262-6978
STORE\W08-34ES

SERIES 7000 ALUM WINDOW WALL SYSTEM (L.M.I.)

E.S. WINDOWS, LLC
3550 N.W. 49 STREET
MIAMI, FL. 33142
TEL. (305) 638-5151 FAX. (305) 638-5158

revisions:

no	date	by	description
A	06.19.13		REV. PER RER COMMENTS
B	04.03.15		UPDATED TO 2014 FBC
C	07.28.15		NO CHANGE THIS SHEET

date: 04-24-13
scale: 3/8" = 1"
dr. by: HAMID
chk. by:

drawing no.
W08-34

MULLION DESIGN LOAD CAPACITY – PSF CHART FOR INSUL. LAM. GLASS MULLIONS WITH INTERMEDIATE HORIZONTALS			
NOMINAL DIMS.		JAMB 'J1' MULL 'M1'	
WIDTH (W)	FRAME HEIGHT	EXT. (+)	INT. (–)
30"	114"	92.0	92.0
36"		92.0	92.0
42"		92.0	92.0
48"		92.0	92.0
54"		92.0	92.0
60"		92.0	92.0
30"	120"	92.0	92.0
36"		92.0	92.0
42"		92.0	92.0
48"		92.0	92.0
54"		92.0	92.0
57"		89.9	89.9
30"	126"	92.0	92.0
36"		92.0	92.0
42"		92.0	92.0
48"		92.0	92.0
54"		82.0	82.0
30"	132"	92.0	92.0
36"		92.0	92.0
42"		91.7	91.7
48"		80.2	80.2
52"		74.0	74.0
30"	138"	92.0	92.0
36"		92.0	92.0
42"		80.2	80.2
48"		70.2	70.2
50"		67.4	67.4
30"	144"	92.0	92.0
36"		82.4	82.4
42"		70.6	70.6
48"		61.8	61.8

MULLION DESIGN LOAD CAPACITY – PSF CHART FOR INSUL. LAM. GLASS MULLIONS WITH INTERMEDIATE HORIZONTALS					
NOMINAL DIMS.		JAMB 'J2' MULL 'M2'		JAMB 'J3' MULL 'M3'	
WIDTH (W)	FRAME HEIGHT	EXT. (+)	INT. (–)	EXT. (+)	INT. (–)
30"	96"	100.0	150.0	100.0	150.0
36"		100.0	150.0	100.0	150.0
42"		100.0	150.0	100.0	150.0
48"		100.0	150.0	100.0	150.0
54"		100.0	150.0	100.0	150.0
58"		100.0	150.0	100.0	150.0
60"		100.0	140.0	100.0	140.0
30"	102"	100.0	150.0	100.0	150.0
36"		100.0	150.0	100.0	150.0
42"		100.0	150.0	100.0	150.0
48"		100.0	150.0	100.0	150.0
54"		100.0	150.0	100.0	150.0
55"		100.0	150.0	100.0	150.0
60"		100.0	140.0	100.0	140.0
30"	108"	100.0	150.0	100.0	150.0
36"		100.0	150.0	100.0	150.0
42"		100.0	150.0	100.0	150.0
48"		100.0	150.0	100.0	150.0
52"		100.0	150.0	100.0	150.0
54"		100.0	140.0	100.0	140.0
60"		100.0	135.9	100.0	140.0
30"	114"	100.0	150.0	100.0	150.0
36"		100.0	150.0	100.0	150.0
42"		100.0	150.0	100.0	150.0
48"		100.0	150.0	100.0	150.0
49"		100.0	149.4	100.0	150.0
54"		100.0	135.5	100.0	140.0
58"		100.0	126.2	100.0	140.0
60"		100.0	110.0	100.0	110.0
30"	120"	100.0	150.0	100.0	150.0
36"		100.0	150.0	100.0	150.0
42"		100.0	150.0	100.0	150.0
47"		100.0	140.5	100.0	150.0
48"		100.0	137.6	100.0	140.0
54"		100.0	122.3	100.0	140.0
55"		100.0	120.1	100.0	140.0
57"		100.0	110.0	100.0	110.0
30"	126"	100.0	150.0	100.0	150.0
36"		100.0	150.0	100.0	150.0
42"		100.0	142.6	100.0	150.0
44"		100.0	136.2	100.0	150.0
48"		100.0	124.8	100.0	140.0
52"		100.0	115.2	100.0	140.0
54"		100.0	110.0	100.0	110.0
30"	132"	100.0	150.0	100.0	150.0
36"		100.0	150.0	100.0	150.0
42"		100.0	130.0	100.0	150.0
48"		100.0	113.7	100.0	140.0
50"		100.0	109.2	100.0	140.0
52"		100.0	105.0	100.0	110.0
30"	138"	100.0	150.0	100.0	150.0
36"		100.0	135.0	100.0	150.0
40"		100.0	121.5	100.0	150.0
42"		100.0	115.7	100.0	140.0
48"		100.0	101.2	100.0	132.3
50"		97.2	97.2	100.0	110.0
30"	144"	100.0	142.5	100.0	150.0
36"		100.0	118.8	100.0	150.0
39"		100.0	109.7	100.0	143.3
42"		100.0	101.8	100.0	133.0
48"		89.1	89.1	100.0	110.0

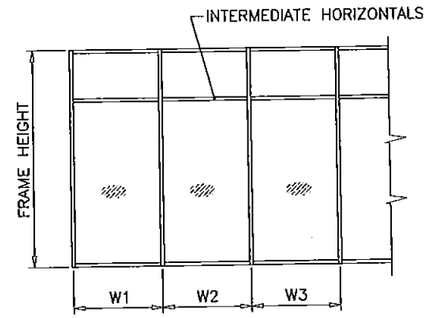

WIDTH (W) = W1
AT JAMB

WIDTH (W) = $\frac{W2 + W3}{2}$
AT MULLION

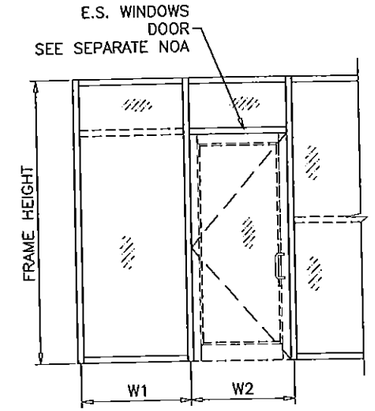

WIDTH (W) = $\frac{W1 + W2}{2}$
AT MULLION

NOTE:
INTERPOLATION BETWEEN WIDTHS ALLOWED.

Engr: JAVAD AHMAD
CIVIL
FLA. PE # 70592
C.A.N. 3538

JUL 3 1 2015

PRODUCT REVISED
as complying with the Florida
Building Code
Acceptance No 15-0430.05
Expiration Date July 25, 2018
By Manuel Perez
Miami-Dade Product Control

AL-FAROOQ CORPORATION
ENGINEERS & PRODUCT DEVELOPMENT
1235 S.W. 87 AVE
MIAMI, FLORIDA 33174
TEL. (305) 264-8100 FAX. (305) 262-6978
STORE\W08-34ES

SERIES 7000 ALUM. WINDOW WALL SYSTEM (L.M.I.)

E.S. WINDOWS, LLC
3550 N.W. 49 STREET
MIAMI, FL. 33142
TEL. (305) 638-5151 FAX. (305) 638-5158

revisions:

no	date	by	description
A	06.19.13		REV. PER RER COMMENTS
B	04.03.15		UPDATED TO 2014 FBC
C	07.29.15		NO CHANGE THIS SHEET

date: 04-24-13
scale: 3/8" = 1"
dr. by: HAMID
chk. by:

drawing no.
W08-34

ANCHOR DESIGN LOAD CAPACITY – PSF EXT.(+) & INT.(–)							
NOMINAL DIMS.		TYPE 'A'		TYPE 'B'		TYPE 'C'	
WIDTH (W)	FRAME HEIGHT	A3	A4	B3	B4	C3	C4
30"	90"	150.0	150.0	150.0	150.0	150.0	150.0
36"		150.0	150.0	150.0	150.0	150.0	150.0
42"		132.6	150.0	150.0	150.0	146.3	150.0
48"		116.0	150.0	150.0	150.0	128.0	150.0
54"		103.1	137.5	149.3	150.0	113.8	150.0
60"		92.8	123.7	134.4	150.0	102.4	136.5
30"	96"	150.0	150.0	150.0	150.0	150.0	150.0
36"		145.0	150.0	150.0	150.0	150.0	150.0
42"		124.3	150.0	150.0	150.0	137.1	150.0
48"		108.8	145.0	150.0	150.0	120.0	150.0
54"		96.7	128.9	140.0	150.0	106.7	142.2
60"		87.0	116.0	126.0	150.0	96.0	128.0
30"	102"	150.0	150.0	150.0	150.0	150.0	150.0
36"		136.5	150.0	150.0	150.0	150.0	150.0
42"		117.0	150.0	150.0	150.0	129.1	150.0
48"		102.4	136.5	148.2	150.0	112.9	150.0
54"		91.0	121.3	131.8	150.0	100.4	133.9
60"		81.9	109.2	118.6	150.0	90.4	120.5
30"	108"	150.0	150.0	150.0	150.0	150.0	150.0
36"		128.9	150.0	150.0	150.0	142.2	150.0
42"		110.5	147.3	150.0	150.0	121.9	150.0
48"		96.7	128.9	140.0	150.0	106.7	142.2
54"		85.9	114.6	124.4	150.0	94.8	126.4
60"		77.3	103.1	112.0	149.3	85.3	113.8
30"	114"	146.5	150.0	150.0	150.0	150.0	150.0
36"		122.1	150.0	150.0	150.0	134.7	150.0
42"		104.7	139.5	150.0	150.0	115.5	150.0
48"		91.6	122.1	132.6	150.0	101.1	134.7
54"		81.4	108.5	117.9	150.0	89.8	119.8
60"		73.3	97.7	106.1	141.5	80.8	107.8
30"	120"	139.2	150.0	150.0	150.0	150.0	150.0
36"		116.0	150.0	150.0	150.0	128.0	150.0
42"		99.4	132.6	144.0	150.0	109.7	146.3
48"		87.0	116.0	126.0	150.0	96.0	128.0
54"		77.3	103.1	112.0	149.3	85.3	113.8
30"	126"	132.6	150.0	150.0	150.0	146.3	150.0
36"		110.5	147.3	150.0	150.0	121.9	150.0
42"		94.7	126.3	137.1	150.0	104.5	139.3
48"		82.9	110.5	120.0	150.0	91.4	121.9
54"		73.7	98.2	106.7	142.2	81.3	108.4
30"	132"	126.5	150.0	150.0	150.0	139.6	150.0
36"		105.5	140.6	150.0	150.0	116.4	150.0
42"		90.4	120.5	130.9	150.0	99.7	133.0
48"		79.1	105.5	114.5	150.0	87.3	116.4
52"		73.0	97.3	105.7	141.0	–	–
30"	138"	121.0	150.0	150.0	150.0	133.6	150.0
36"		100.9	134.5	146.1	150.0	111.3	148.4
42"		86.5	115.3	125.2	150.0	95.4	127.2
48"		75.7	100.9	109.6	146.1	83.5	111.3
30"	144"	116.0	150.0	150.0	150.0	128.0	150.0
36"		96.7	128.9	140.0	150.0	106.7	142.2
42"		82.9	110.5	120.0	150.0	91.4	121.9
48"		72.5	96.7	105.0	140.0	80.0	106.7

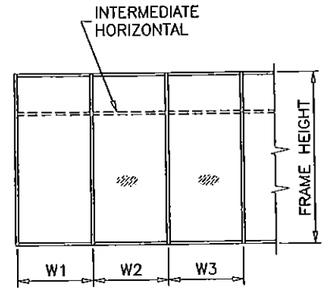

WIDTH (W) = W1
AT FRAME JAMB

WIDTH (W) = $\frac{W2 + W3}{2}$
AT FRAME MULLION

ANCHORS TYPES: SEE SHEET 7 FOR DESCRIPTION

A3 = (3) ANCHORS TYPE 'A' AT EACH SIDE OF JAMB AND MULLION
B3 = (3) ANCHORS TYPE 'B' AT EACH SIDE OF JAMB AND MULLION
C3 = (3) ANCHORS TYPE 'C' AT EACH SIDE OF JAMB AND MULLION

A4 = (4) ANCHORS TYPE 'A' AT EACH SIDE OF JAMB AND MULLION
B4 = (4) ANCHORS TYPE 'B' AT EACH SIDE OF JAMB AND MULLION
C4 = (4) ANCHORS TYPE 'C' AT EACH SIDE OF JAMB AND MULLION

ALL OTHER ANCHORS TO BE SPACED AS PER ELEVATION.

NOTE:
INTERPOLATION BETWEEN WIDTHS OR HEIGHTS ALLOWED.

Engr: JAVAD AHMAD
CIVIL
FLA. PE # 70592
CIA.N. 3538

JUL 3 1 2015

PRODUCT REVISED
as complying with the Florida
Building Code
Acceptance No 15-0430.05
Expiration Date July 25, 2018
By Manuel Perez
Miami Dade Product Control

AL-FAROOQ CORPORATION
ENGINEERS & PRODUCT DEVELOPMENT
1235 S.W. 87 AVE
MIAMI, FLORIDA 33174
TEL. (305) 264-8100 FAX. (305) 262-6978
STORE\W08-34ES

SERIES 7000 ALUM WINDOW WALL SYSTEM (L.M.I.)

E.S. WINDOWS, LLC
3550 N.W. 49 STREET
MIAMI, FL. 33142
TEL. (305) 638-5151 FAX. (305) 638-5158

revisions:

no	date	by	description
A	06.19.13		REV. PER RER COMMENTS
B	04.03.15		UPDATED TO 2014 FBC
C	07.29.15		NO CHANGE THIS SHEET

date: 04-24-13
scale: 3/8" = 1"
dr. by: HAMID
chk. by:

drawing no.
W08-34

DOOR MULLION DESIGN LOAD CAPACITY-PSF				
SIDELITE WIDTH INCHES	FRAME HEIGHT INCHES	MULL 'MD1' EXT. (+) INT. (-)	MULL 'MD2' EXT. (+) INT. (-)	MULL 'MD3' EXT. (+) INT. (-)
30	120	90.0	90.0	90.0
36		90.0	90.0	90.0
42		90.0	90.0	90.0
48		90.0	90.0	90.0
54		90.0	90.0	90.0
57		89.7	90.0	90.0
30	126	90.0	90.0	90.0
36		90.0	90.0	90.0
42		85.7	90.0	90.0
48		81.3	90.0	90.0
54		77.3	90.0	90.0
30	132	81.4	90.0	90.0
36		76.8	90.0	90.0
42		72.8	90.0	90.0
48		69.1	90.0	90.0
52		66.9	90.0	90.0
30	138	69.7	90.0	90.0
36		65.8	90.0	90.0
42		62.4	90.0	90.0
48		59.3	86.8	90.0
50		58.4	85.4	90.0
30	144	60.2	90.0	90.0
36		57.0	85.8	90.0
42		54.1	81.6	90.0
48		51.5	77.8	90.0

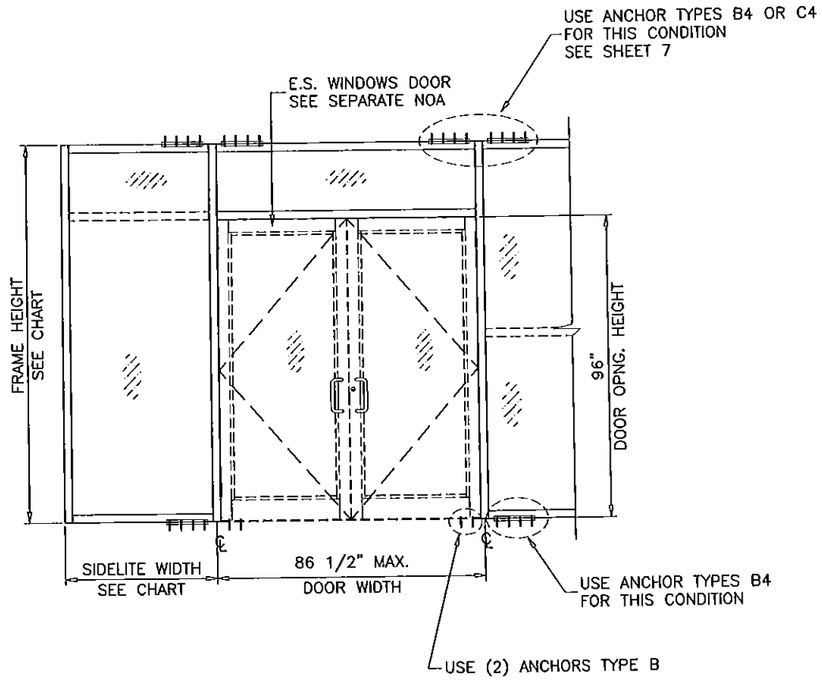

DOOR MULLION DESIGN LOAD CAPACITY-PSF				
SIDELITE WIDTH INCHES	FRAME HEIGHT INCHES	MULL 'MD1' EXT. (+) INT. (-)	MULL 'MD2' EXT. (+) INT. (-)	MULL 'MD3' EXT. (+) INT. (-)
30	120	90.0	90.0	90.0
36		90.0	90.0	90.0
42		90.0	90.0	90.0
48		90.0	90.0	90.0
54		86.2	90.0	90.0
57		84.0	90.0	90.0
30	126	90.0	90.0	90.0
36		84.9	90.0	90.0
42		80.3	90.0	90.0
48		76.2	90.0	90.0
54		72.4	90.0	90.0
30	132	76.2	90.0	90.0
36		72.0	90.0	90.0
42		68.2	90.0	90.0
48		64.7	90.0	90.0
52		62.6	89.1	90.0
30	138	65.3	90.0	90.0
36		61.7	89.0	90.0
42		58.5	84.3	90.0
48		55.6	80.2	90.0
50		54.7	78.9	90.0
30	144	56.4	81.4	90.0
36		53.4	77.0	90.0
42		50.7	73.1	90.0
48		48.2	69.5	90.0

LAMINATED GLASS MULLIONS

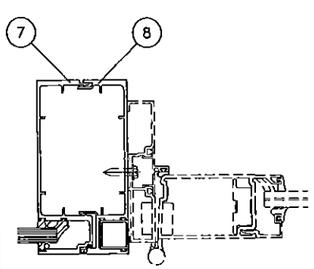

MULLION 'MD1'

Ix IN^4	Sx IN^3
15.385	4.546

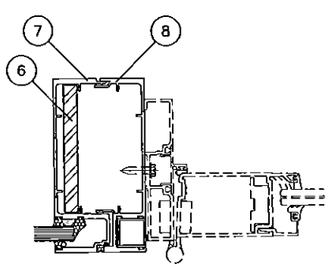

MULLION 'MD2'

	Ix IN^4	Sx IN^3
ALUMINUM	15.385	4.546
STEEL	3.797	1.6875
TOTAL Ix ALUM + Ix STL X 2.9	26.396	

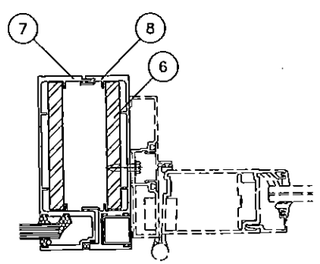

MULLION 'MD3'

	Ix IN^4	Sx IN^3
ALUMINUM	15.385	4.546
STEEL	7.594	3.375
TOTAL Ix ALUM + Ix STL X 2.9	37.407	

INSUL. LAM. GLASS MULLIONS

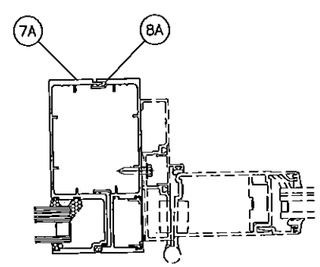

MULLION 'MD1'

Ix IN^4	Sx IN^3
14.414	4.488

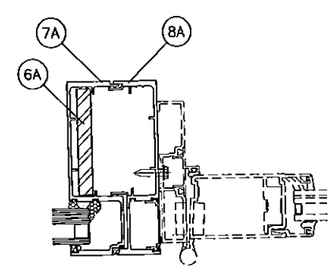

MULLION 'MD2'

	Ix IN^4	Sx IN^3
ALUMINUM	14.414	4.488
STEEL	2.197	1.172
TOTAL Ix ALUM + Ix STL X 2.9	20.786	

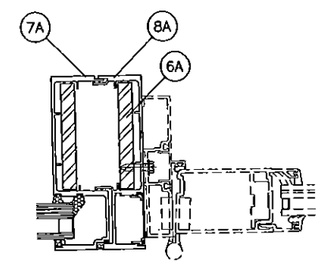

MULLION 'MD3'

	Ix IN^4	Sx IN^3
ALUMINUM	14.414	4.488
STEEL	4.394	2.344
TOTAL Ix ALUM + Ix STL X 2.9	27.158	

Engr: JAVAD AHMAD
CIVIL
FLA. PE # 70592
C.A.N. 3538

PRODUCT REVISED
as complying with the Florida
Building Code
Acceptance No 15-0430.05
Expiration Date July 25, 2018
By Manuel Perez
Miami Dade Product Control

AL-FAROOQ CORPORATION
ENGINEERS & PRODUCT DEVELOPMENT
1235 S.W. 87 AVE.
MIAMI, FLORIDA 33174
TEL. (305) 264-8100 FAX. (305) 262-6978
STORE\W08-34ES

SERIES 7000 ALUM WINDOW WALL SYSTEM (L.M.I.)

E.S. WINDOWS, LLC
3550 N.W. 49 STREET
MIAMI, FL. 33142
TEL. (305) 638-5151 FAX. (305) 638-5158

revisions:

no	date	by	description
A	06.19.13		REV. PER RER COMMENTS
B	04.03.15		UPDATED TO 2014 FBC
C	07.29.15		NO CHANGE THIS SHEET

date: 04-24-13
scale: 3/8" = 1"
dr. by: HAMID
chk. by:

drawing no.
W08-34

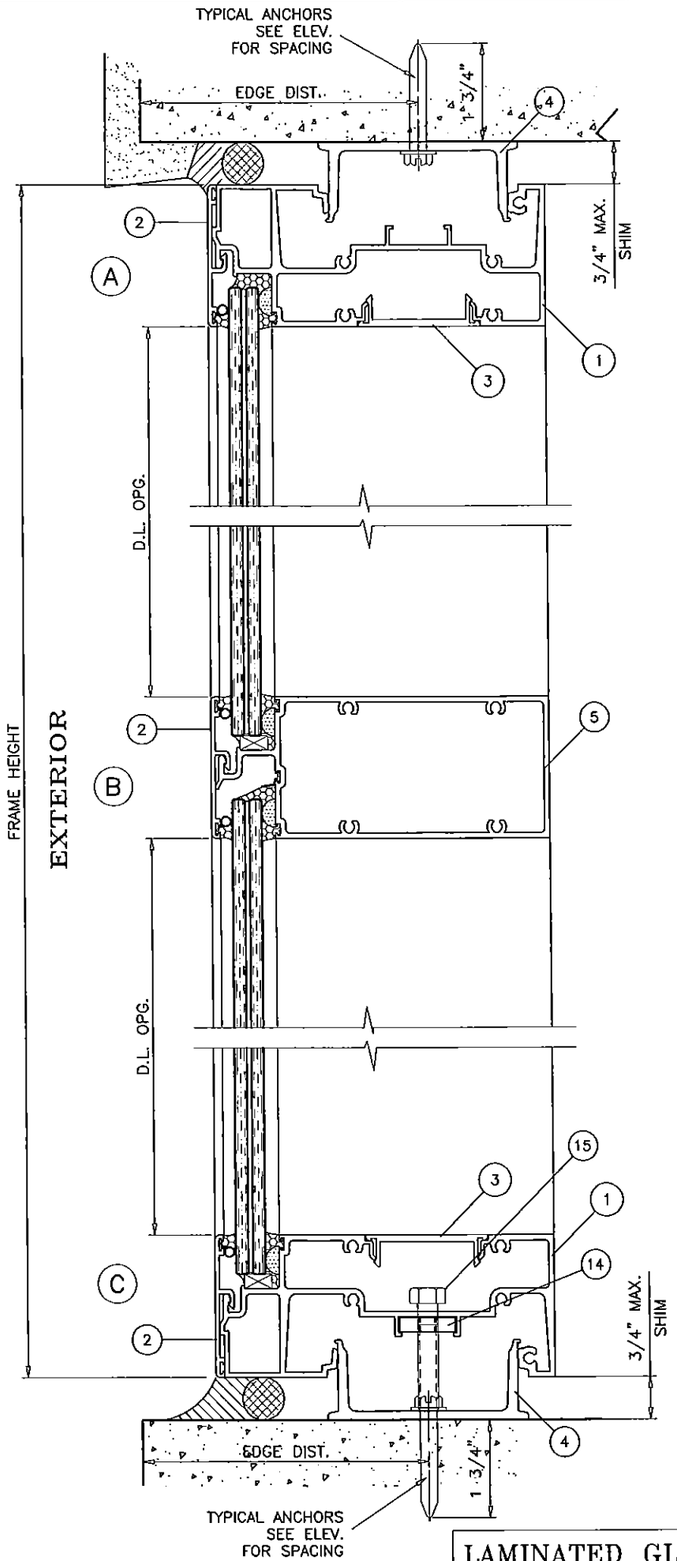

LAMINATED GLASS

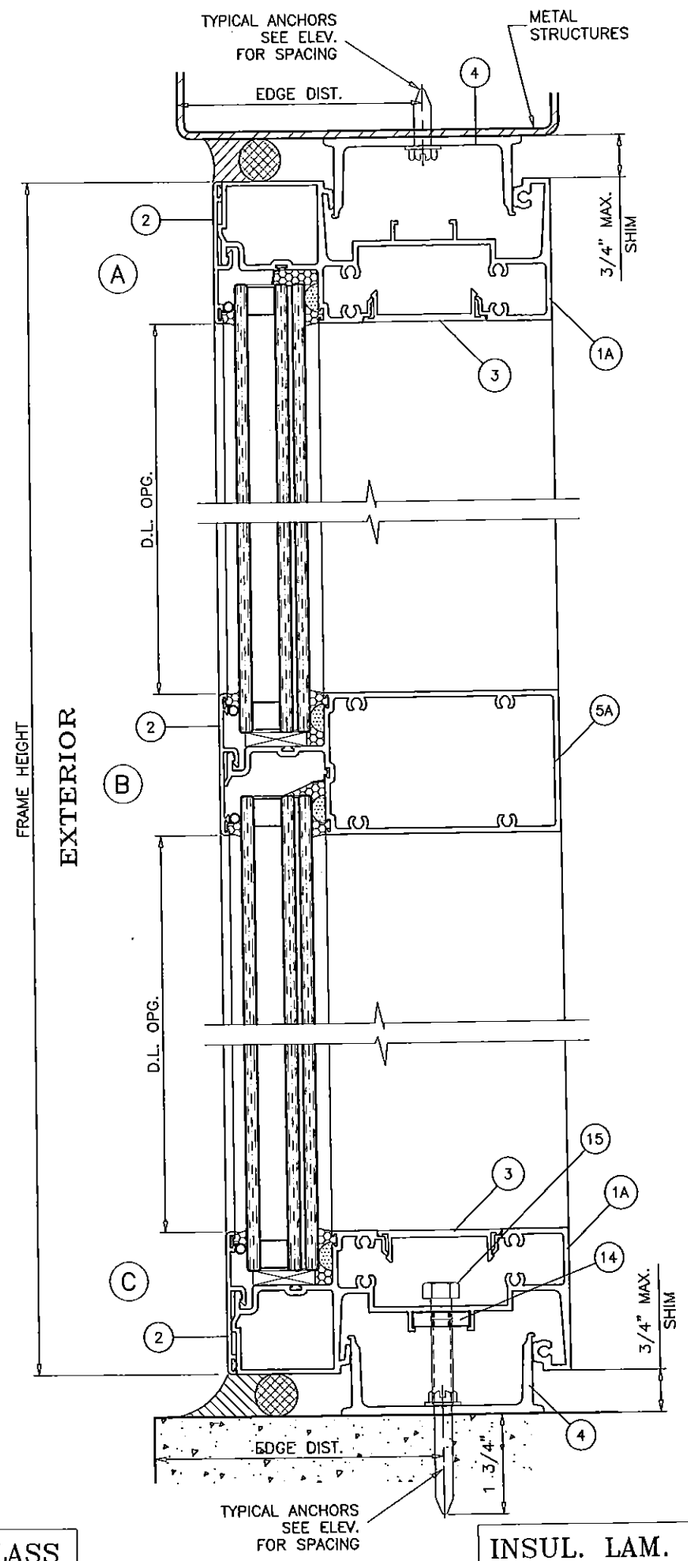

INSUL. LAM. GLASS

METAL STRUCTURES NOT BY E.S. WDW.
MUST SUPPORT LOADS IMPOSED BY GLAZING SYSTEM AND TRANSFER THEM TO THE BUILDING STRUCTURE.

TYPICAL ANCHORS: SEE ELEV. FOR SPACING

TYPE 'A'

1/4" DIA ULTRACON BY 'ELCO' (Fu=177 KSI, Fy=155 KSI)

DIRECTLY INTO CONCRETE (3000 PSI MIN.)
WITH 1-3/4" MIN. EMBED INTO CONC.

ANCHOR EDGE DISTANCES

INTO CONCRETE = 2-1/2" MIN.

TYPE 'B'

5/16" DIA ULTRACON BY 'ELCO' (Fu=177 KSI, Fy=155 KSI)

DIRECTLY INTO CONCRETE (3000 PSI MIN.)
WITH 1-3/4" MIN. EMBED INTO CONC.

ANCHOR EDGE DISTANCES

INTO CONCRETE = 3-1/8" MIN.

TYPE 'C'

#14 SMS OR SELF DRILLING SCREWS ST/ST (Fu=100 KSI, Fy=65 KSI)

INTO METAL STRUCTURES

STEEL : 1/8" THK. MIN. (Fy = 36 KSI MIN.)
ALUMINUM : 1/8" THK. MIN. (6063-T6 MIN.)
(STEEL IN CONTACT WITH ALUMINUM TO BE PLATED OR PAINTED)

ANCHOR EDGE DISTANCES

INTO METAL STRUCTURE = 1" MIN.

SEALANTS:

ALL FRAME CORNERS, JOINTS, MULLION SEAMS AND PERIMETER OF GLAZING BEAD TO FRAME SEALED WITH SILICONE SEALANT.

Engr: JAVAD AHMAD
CIVIL
FLA. PE # 70592
C.A.N. 3538

PRODUCT REVISED
as complying with the Florida
Building Code
Acceptance No 15-0430.05
Expiration Date July 25, 2018
By Manuel Sera
Miami Dade Product Control

AL-FAROOQ CORPORATION
ENGINEERS & PRODUCT DEVELOPMENT
1235 S.W. 87 AVE
MIAMI, FLORIDA 33174
TEL. (305) 264-8100 FAX. (305) 262-6978
STORE\W08-34ES

SERIES 7000 ALUM WINDOW WALL SYSTEM (L.M.I.)

E.S. WINDOWS, LLC
3550 N.W. 49 STREET
MIAMI, FL. 33142
TEL. (305) 638-5151 FAX. (305) 638-5158

revisions:

no	date	by	description
A	06.19.13		NO CHANGE THIS SHEET
B	04.03.15		UPDATED TO 2014 FBC
C	07.29.15		REV. PER RER COMMENTS

date: 04-14-13
scale: 3/8" = 1"
dr. by: HAMID
chk. by:

drawing no.
W08-34

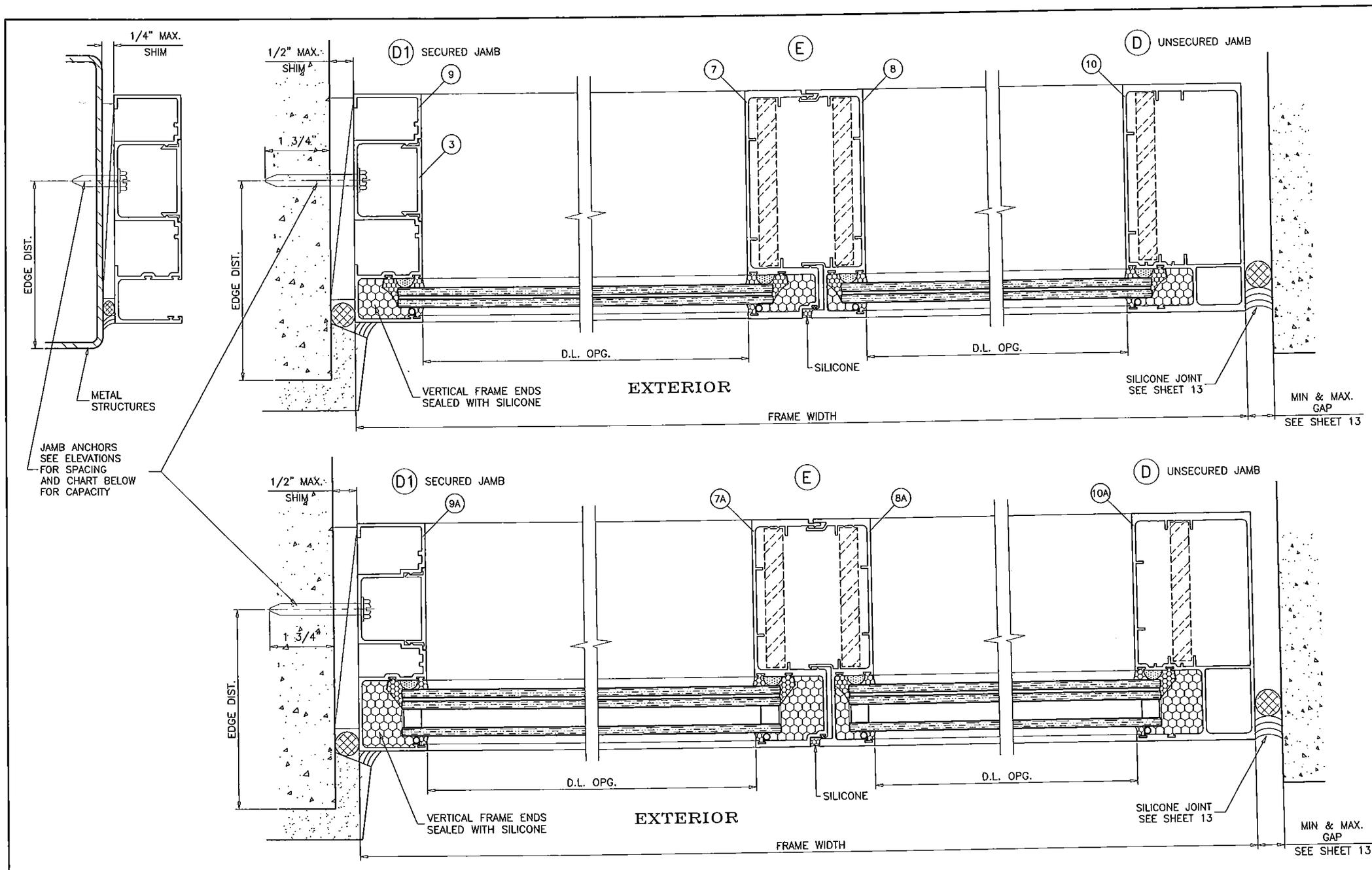

JAMB ANCHORS DESIGN LOAD CAPACITY - PSF					
	1/4" MAX. SHIM SPACE	3/8" MAX. SHIM SPACE		1/2" MAX. SHIM SPACE	
	ANCHORS 'A', 'B' & 'C'	ANCHORS 'A'	ANCHORS 'B'	ANCHORS 'A'	ANCHORS 'B'
WIDTH (W)	EXT.(+) INT.(-)	EXT.(+) INT.(-)	EXT.(+) INT.(-)	EXT.(+) INT.(-)	EXT.(+) INT.(-)
36"	150.0	143.2	150.0	107.6	150.0
42"	150.0	122.7	150.0	92.5	150.0
48"	150.0	107.4	150.0	80.9	150.0
54"	150.0	95.5	150.0	71.9	141.8
60"	150.0	85.9	150.0	64.7	127.6

Engr: JAVAD AHMAD
CIVIL
FLA. PE # 70592
C.A.N. 3538

JUL 31 2015

PRODUCT REVISED
as complying with the Florida Building Code
Acceptance No 15-0430.05
Expiration Date July 25, 2018
By Manuel Perez
Miami Dade Product Control

AL-FAROOQ CORPORATION
ENGINEERS & PRODUCT DEVELOPMENT
1235 S.W. 87 AVE
MIAMI, FLORIDA 33174
TEL. (305) 264-8100 FAX. (305) 262-6978
STORE\W08-34ES

SERIES 7000 ALUM WINDOW WALL SYSTEM (L.M.I.)

E.S. WINDOWS, LLC
3550 N.W. 49 STREET
MIAMI, FL. 33142
TEL. (305) 638-5151 FAX. (305) 638-5158

revisions:

no	date	by	description
A	06.19.13		NO CHANGE THIS SHEET
B	04.03.15		UPDATED TO 2014 FBC
C	07.29.15		REV. PER RER COMMENTS

date: 04-24-13
scale: 3/8" = 1"
dr. by: HAMID
chk. by:

drawing no.
W08-34

sheet 8 of 13

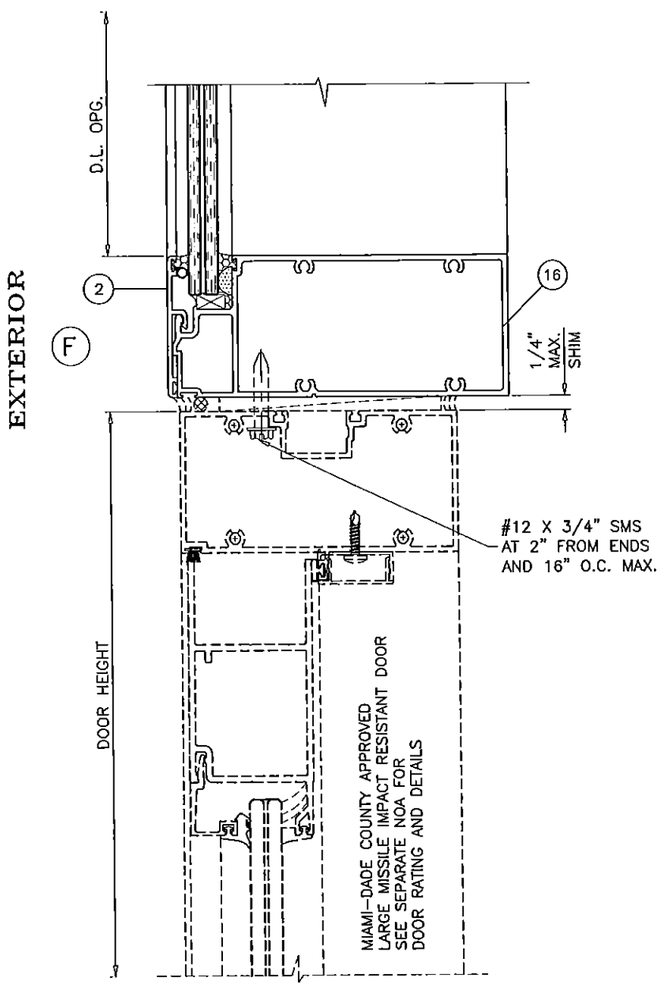

LAMINATED GLASS

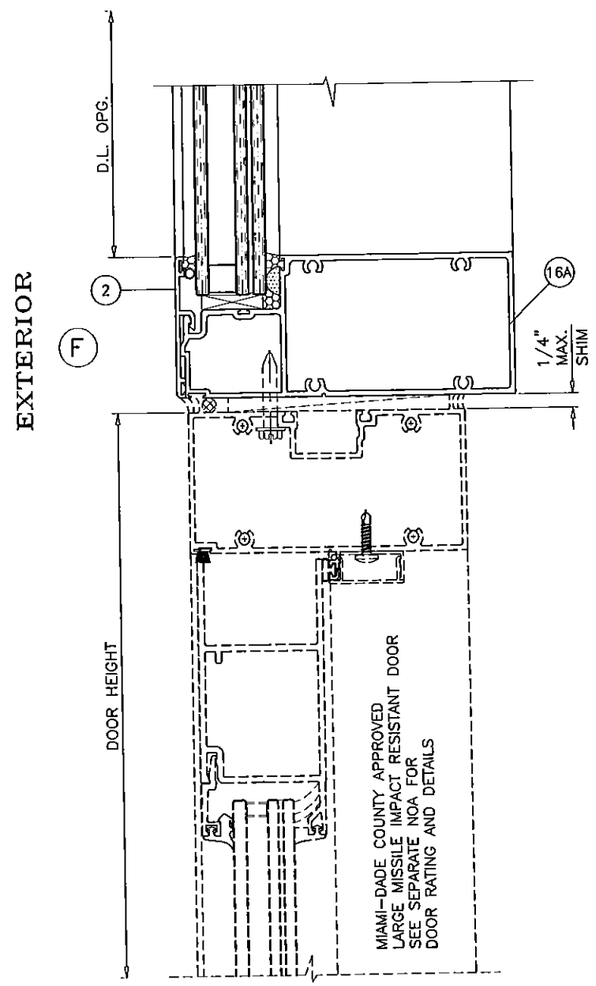

INSUL. LAM. GLASS

SEE SEPARATE NOA FOR DESIGN LOAD CAPACITY OF DOORS AND DOOR ANCHORS.

LOWER VALUES FROM DOORS NOA OR WINDOWALL SYSTEM CAPACITY CHARTS WILL APPLY TO ENTIRE SYSTEM.

Engr: JAVAD AHMAD
CIVIL
FLA. PE # 70592
C.A.N. 3538

JUL 31 2015

PRODUCT REVISED
as complying with the Florida Building Code
Acceptance No 15-0430.05
Expiration Date July 25, 2018
By Manuel Perez
Miami Dade Product Control

AL-FAROOQ CORPORATION
ENGINEERS & PRODUCT DEVELOPMENT
1235 S.W. 87 AVE
MIAMI, FLORIDA 33174
TEL. (305) 264-8100 FAX. (305) 262-6978

STORE\W08-34ES

SERIES 7000 ALUM WINDOW WALL SYSTEM (L.M.I.)

E.S. WINDOWS, LLC
3550 N.W. 49 STREET
MIAMI, FL. 33142
TEL. (305) 638-5151 FAX. (305) 638-5158

revisions:

no	date	by	description
A	06.19.13		NO CHANGE THIS SHEET
B	04.03.15		UPDATED TO 2014 FBC
C	07.29.15		NO CHANGE THIS SHEET

date: 04-24-13
scale: 3/8" = 1"
dr. by: HAMID
chk. by:

drawing no.
W08-34

sheet 9 of 13

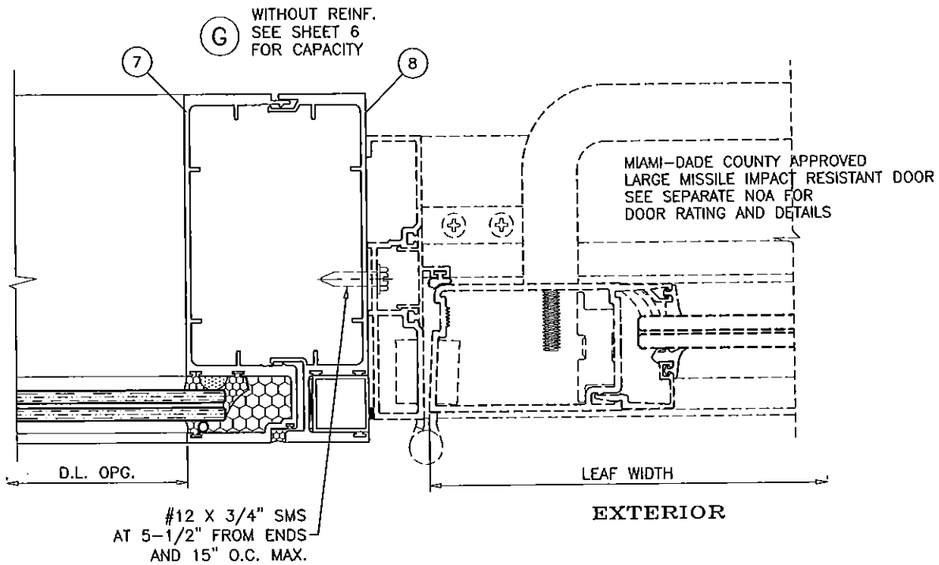

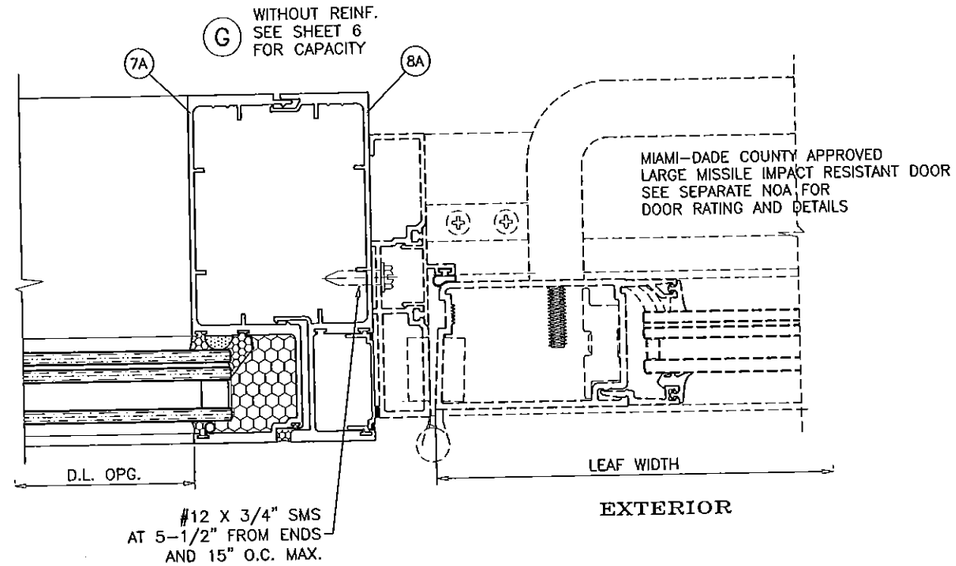

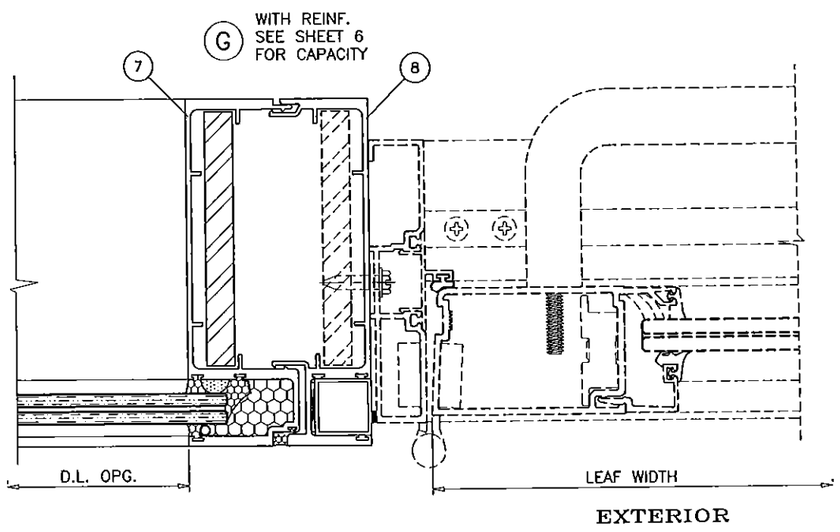

LAMINATED GLASS

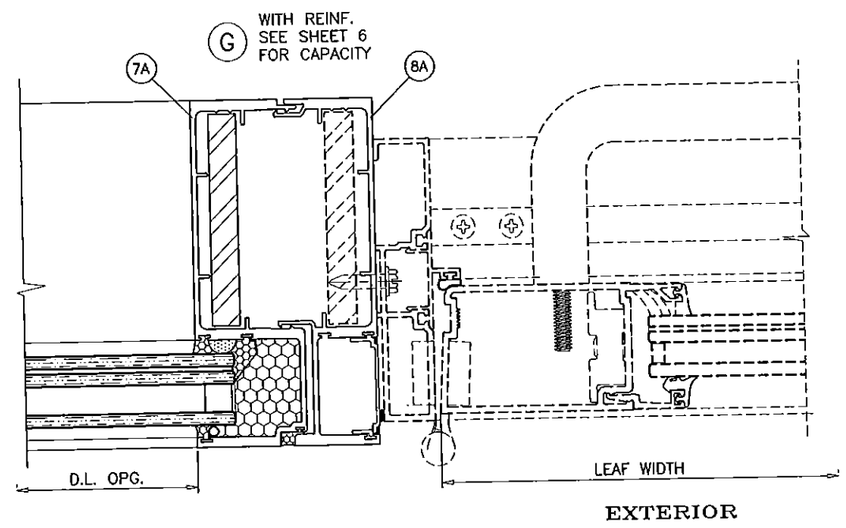

INSUL. LAM. GLASS

SEE SEPARATE NOA FOR DESIGN LOAD CAPACITY OF DOORS AND DOOR ANCHORS.

LOWER VALUES FROM DOORS NOA OR WINDOWALL SYSTEM CAPACITY CHARTS WILL APPLY TO ENTIRE SYSTEM.

Engr: JAVAD AHMAD
CIVIL
FLA. PE # 70592
C.A.N. 3538

2015

PRODUCT REVISED
as complying with the Florida
Building Code
Acceptance No 15-0430.05
Expiration Date July 25, 2018
By Manuel Perez
Miami-Dade Product Control

AL-FAROOQ CORPORATION
ENGINEERS & PRODUCT DEVELOPMENT
1235 S.W. 87 AVE
MIAMI, FLORIDA 33174
TEL. (305) 264-8100 FAX. (305) 262-6978

STORE\W08-34ES

SERIES 7000 ALUM WINDOW WALL SYSTEM (L.M.I.)

E.S. WINDOWS, LLC
3550 N.W. 49 STREET
MIAMI, FL. 33142
TEL. (305) 638-5151 FAX. (305) 638-5158

revisions:

no	date	by	description
A	06.19.13		NO CHANGE THIS SHEET
B	04.03.15		UPDATED TO 2014 FBC
C	07.29.15		NO CHANGE THIS SHEET

date: 04-24-13
scale: 3/8" = 1"
dr. by: HAMID
chk. by:

drawing no.
W08-34

UNANCHORED JAMB DEFLECTION AT 100 PSF DESIGN WIND PRESSURE DEFLECTION – IN. (CHART D100)					
NOMINAL DIMS.		LAM. GLASS		INSUL. LAM. GLASS	
WIDTH (W)	FRAME HEIGHT	UNREINF.	REINF.	UNREINF.	REINF.
30"	96"	.079	.045	.081	.056
36"		.095	.054	.097	.067
42"		.110	.063	.114	.078
48"		.126	.072	.130	.090
54"		.142	.081	.146	.101
60"		.158	.090	.162	.112
30"	102"	.100	.057	.103	.071
36"		.121	.069	.124	.086
42"		.141	.080	.145	.100
48"		.161	.092	.165	.114
54"		.181	.103	.186	.128
60"		.201	.115	.207	.143
30"	108"	.126	.072	.130	.090
36"		.152	.086	.156	.108
42"		.177	.101	.182	.126
48"		.202	.115	.208	.144
54"		.227	.130	.234	.161
60"		.253	.144	.260	.179
30"	114"	.157	.089	.161	.111
36"		.188	.107	.194	.134
42"		.220	.125	.226	.156
48"		.251	.143	.258	.178
54"		.282	.161	.290	.200
60"		.314	.179	.323	.223
30"	120"	.192	.110	.198	.137
36"		.231	.132	.238	.164
42"		.269	.154	.277	.191
48"		.308	.176	.317	.219
57"		.365	.198	.376	.260
30"	126"	.234	.133	.241	.166
36"		.281	.160	.289	.199
42"		.328	.187	.337	.233
48"		.374	.213	.385	.266
54"		.421	.240	.433	.299
30"	132"	.282	.161	.290	.200
36"		.338	.193	.348	.240
42"		.395	.225	.406	.280
48"		.451	.257	.464	.320
52"		.488	.278	.503	.347
30"	138"	.337	.192	.346	.239
36"		.404	.230	.416	.287
42"		.471	.269	.485	.335
48"		.539	.307	.554	.383
30"	144"	.399	.228	.411	.284
36"		.479	.273	.493	.340
42"		.559	.319	.575	.397
48"		.639	.364	.657	.454

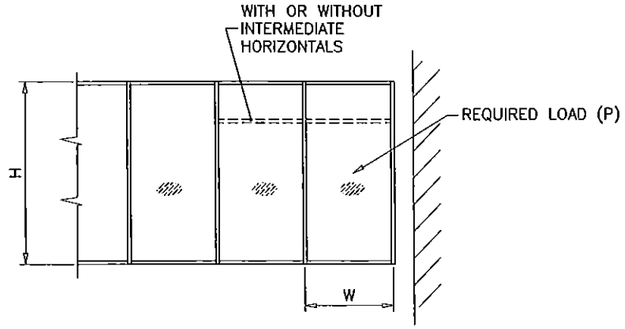

UNANCHORED JAMBS MOVEMENT AND JOINT SEALANT DETERMINATION CHART D100 AT LEFT TO BE USED TO DETERMINE JAMB DEFLECTION AT 100 PSF DESIGN WIND PRESSURE FOR ANY OF THE POSSIBLE UNANCHORED CONDITIONS.
THIS VALUE CAN BE USED TO DETERMINE THE ACTUAL PROJECT DEFLECTION USING INSTRUCTIONS SHOWN BELOW.
USING GAP/DEFLECTION CHART DETERMINE THE MAX. DEFLECTION ALLOWED FOR THE GAPS SHOWN FOR TWO SEALANT TYPES.

INSTRUCTIONS: TO OBTAIN DEFLECTION AT PROJECT

1. DETERMINE APPLICABLE JAMB (UNREINFORCED OR REINFORCED)
2. OBTAIN REQUIRED DESIGN WIND PRESSURE.
3. READ DEFLECTION AT 100 PSF (D100) FROM CHART AT LEFT.
4. OPTAIN PROJECT DEFLECTION (PD)

$$PD = \frac{P}{100} \times D100$$

(PD MUST NOT EXCEED L/180)

5. FROM CHART BELOW DETERMINE MAX. DEFLECTION ALLOWABLE FOR A GIVEN PROJECT GAP AND SEALANT TYPE.

GAP/DEFL. CHART	
GAP. IN.	MAX. DEFL.
.250"	.433"
.375"	.649"
.500"	.800"
.625"	.800"
.750"	.800"
1.000"	.800"

MAXIMUM GAP = 1"
MINIMUM GAP = 1/4"

EXAMPLE:
FOR A GAP OF 1/2"
MAX. DEFLECTION ALLOWED = .800" FOR 100% STRETCH SEALANT

ALTERNATE SEALANTS AT JAMB GAPS CAN BE DESIGNED BY ENGINEER OF RECORD BASED ON MANUFACTURER GUIDE LINES.

GAPS LESS THAN 1/4" MAY BE DESIGNED BY ENGINEER OF RECORD BY THE USE OF BOND BREAKER TAPE OR 15% OF GAP ALLOWED MOVEMENT.

LAMINATED GLASS

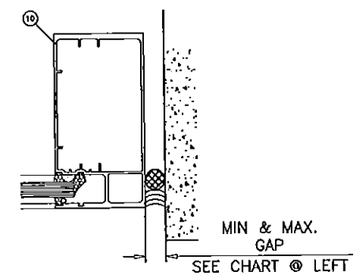

Ix = 14.611 in^4
UNREINFORCED

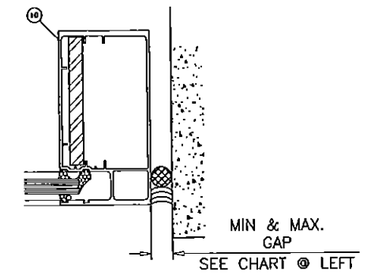

Ix = 25.622 in^4
(IN TERMS OF ALUMINUM)
REINFORCED

INSULATED GLASS

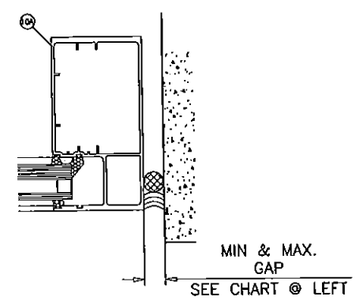

Ix = 14.611 in^4
UNREINFORCED

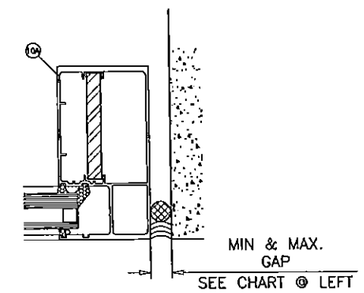

Ix = 25.622 in^4
(IN TERMS OF ALUMINUM)
REINFORCED

NOTE:
DATA IN THIS SHEET MAY BE USED TO QUALIFY SEALANT TO BE USED AT UNANCHORED JAMBS.
MAX. MOVEMENT CONSIDERED=100% STRETCH.
PLEASE REFER TO SEALANT MANUFACTURER'S DATA AND APPLICATION MANUAL FOR COMPATABILITY OF SEALANT TO SUBSTRATE & WINDOW WALL MATERIAL/FINISH AND COMPLIANCE FOR WARRANTY.

Engr: JAVAD AHMAD
CIVIL
FLA. PE # 70592
C.A.N. 3638

PRODUCT REVISED
as complying with the Florida Building Code
Acceptance No 15-0430.05
Expiration Date July 25, 2018
By Manuel Perez
Miami Dade Product Control

AL-FAROOQ CORPORATION
ENGINEERS & PRODUCT DEVELOPMENT
1235 S.W. 87 AVE
MIAMI, FLORIDA 33174
TEL. (305) 264-8100 FAX. (305) 262-6978
STORE\W08-34ES

SERIES 7000 ALUM WINDOW WALL SYSTEM (L.M.I.)

E.S. WINDOWS, LLC
3550 N.W. 49 STREET
MIAMI, FL. 33142
TEL. (305) 638-5151 FAX. (305) 638-5158

revisions:

no	date	by	description
A	06.19.13		REV. PER RER COMMENTS
B	04.03.15		UPDATED TO 2014 FBC
C	07.29.15		NO CHANGE THIS SHEET

date: 04-24-13
scale: NONE
dr. by: HAMID
chk. by:

drawing no.
W08-34

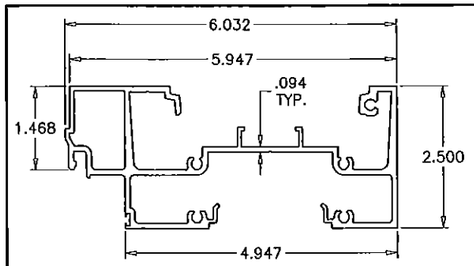

(1) FRAME HEAD/SILL (LAM. GLASS)

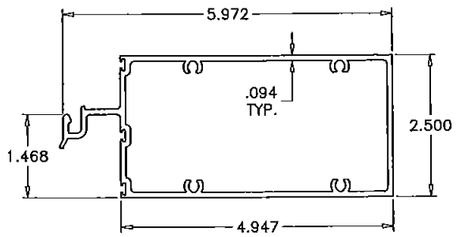

(5) INTERMEDIATE HORIZONTAL (LAM. GLASS)

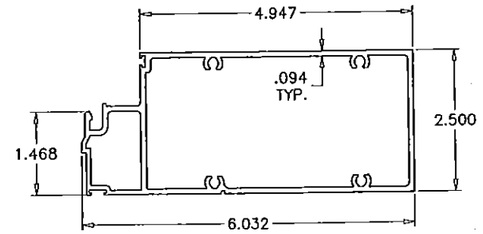

(16) TRANSOM MULLION (LAM. GLASS)

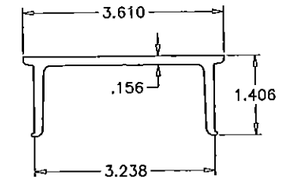

(4) ANCHOR BASE

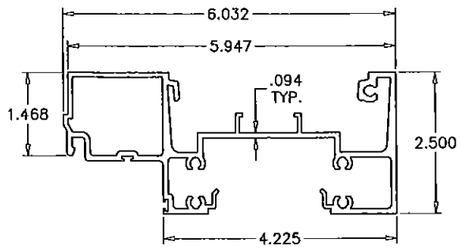

(1A) FRAME HEAD/SILL (LAM. INSUL. GLASS)

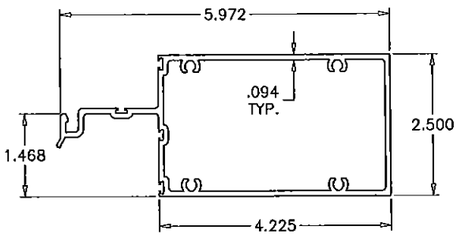

(5A) INTERMEDIATE HORIZONTAL (LAM. INSUL. GLASS)

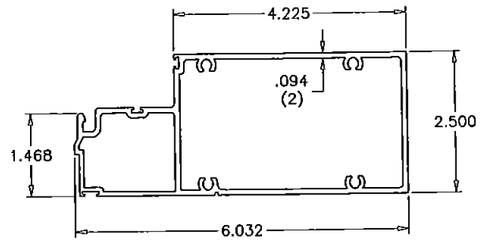

(16A) TRANSOM MULLION (LAM. INSUL. GLASS)

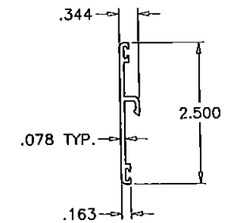

(2) GLAZING STOP

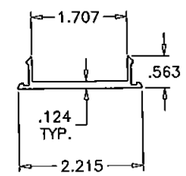

(3) SNAP COVER

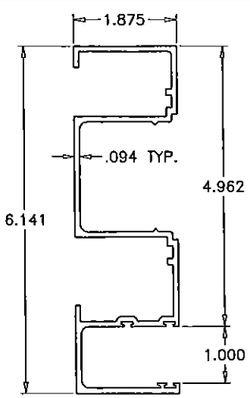

(9) SECURED JAMB (LAM. GLASS)

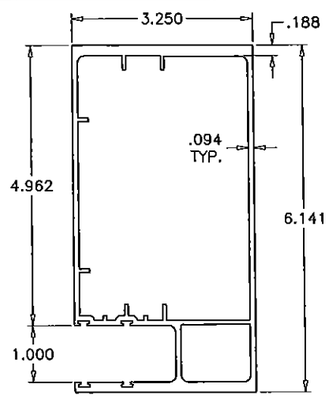

(10) UNSECURED JAMB (LAM. GLASS)

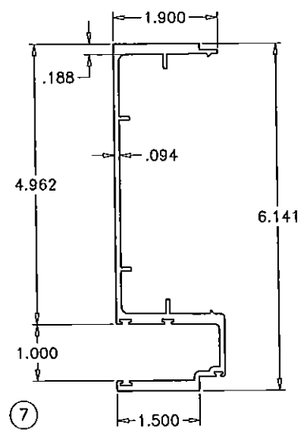

(7) MALE MULLION (LAM. GLASS)

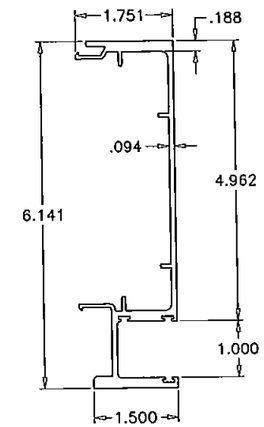

(8) FEMALE MULLION (LAM. GLASS)

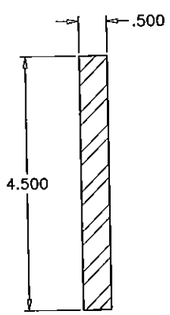

(6) REINF. BAR (LAM. GLASS)

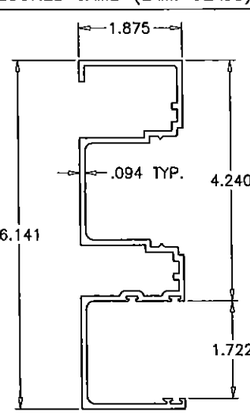

(9A) SECURED JAMB (LAM. INSUL. GL.)

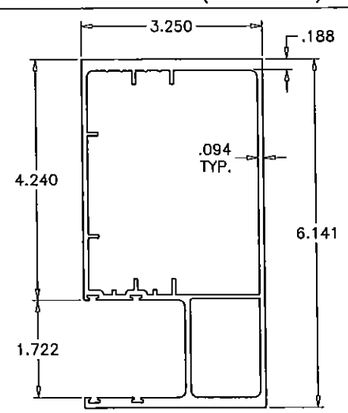

(10A) UNSECURED JAMB (LAM. INSUL. GL.)

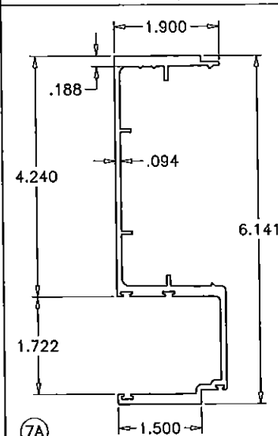

(7A) MALE MULLION (LAM. INSUL. GL.)

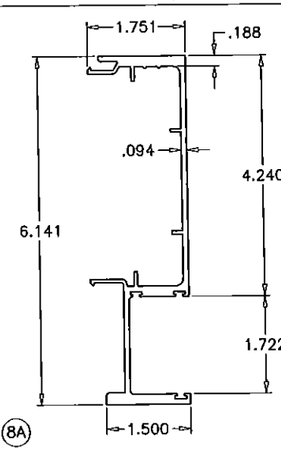

(8A) FEMALE MULLION (LAM. INSUL. GL.)

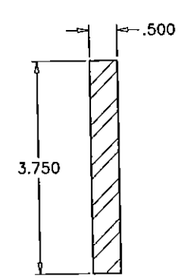

(6A) REINF. BAR (LAM. INSUL. GLASS)

Engr: JAVAD AHMAD
CIVIL
FLA. PE # 70592
C.A.N. 3538

JUL 3 2015

PRODUCT REVISED
as complying with the Florida
Building Code
Acceptance No 15-0430.05
Expiration Date July 25, 2018
By Manuel Perez
Miami-Dade Product Control

AL-FAROOQ CORPORATION
ENGINEERS & PRODUCT DEVELOPMENT
1235 S.W. 87 AVE
MIAMI, FLORIDA 33174
TEL. (305) 264-8100 FAX. (305) 262-6978
STORE\W08-34ES

SERIES 7000 ALUM WINDOW WALL SYSTEM (L.M.I.)

E.S. WINDOWS, LLC
3550 N.W. 49 STREET
MIAMI, FL. 33142
TEL. (305) 638-5151 FAX. (305) 638-5158

revisions:

no	date	by	description
A	06.19.13		NO CHANGE THIS SHEET
B	04.03.15		UPDATED TO 2014 FBC
C	07.29.15		NO CHANGE THIS SHEET

date: 04-24-13
scale: 3/8" = 1"
dr. by: HAMID
chk. by:

drawing no.
W08-34

ITEM NO.	PART NUMBER	QUANTITY	DESCRIPTION	MATERIAL	MANF./SUPPLIER/REMARKS
1	ES7001B	AS REQD.	FRAME HEAD/SILL (LAM. GLASS)	6005-T5	–
1A	ES7021B	AS REQD.	FRAME HEAD/SILL (INSUL. LAM. GLASS)	6005-T5	–
2	ES7006	AS REQD.	GLAZING STOP	6063-T6	–
3	ES7003	AS REQD.	SNAP COVER	6063-T5	–
4	ES7004	AS REQD.	ANCHOR BASE, 9" LONG	6005-T5	–
5	ES7005	AS REQD.	INTERMEDIATE HORIZONTAL (LAM. GLASS)	6005-T5	–
5A	ES7022	AS REQD.	INTERMEDIATE HORIZONTAL (INSUL. LAM. GLASS)	6005-T5	–
6	–	AS REQD.	REINFORCING BAR (LAM. GLASS)	STEEL	A36, Fu MIN. = 58 KSI
6A	–	AS REQD.	REINFORCING BAR (INSUL. LAM. GLASS)	STEEL	A36, Fu MIN. = 58 KSI
7	ES7007	AS REQD.	MALE MULLION (LAM. GLASS)	6005-T5	–
7A	ES7023	AS REQD.	MALE MULLION (INSUL. LAM. GLASS)	6005-T5	–
8	ES7008	AS REQD.	FEMALE MULLION (LAM. GLASS)	6005-T5	–
8A	ES7024	AS REQD.	FEMALE MULLION (INSUL. LAM. GLASS)	6005-T5	–
9	ES7009	AS REQD.	SECURED JAMB (LAM. GLASS)	6063-T6	–
9A	ES7025	AS REQD.	SECURED JAMB (INSUL. LAM. GLASS)	6063-T6	–
10	ES-7010A	AS REQD.	UNSECURED JAMB (LAM. GLASS)	6005-T5	–
10A	ES-7026A	AS REQD.	UNSECURED JAMB (INSUL. LAM. GLASS)	6005-T5	–
11	ES7011	AS REQD.	BUMPON	POLYURETHANE	–
12	ES7012	AS REQD.	EXTERIOR GLASS SEAL	SANTOPRENE	–
13	#12 X 1"	AS REQD.	FRAME ASSEMBLY SCREWS	–	PH SMS
13A	#14 X 1"	AS REQD.	FRAME ASSEMBLY SCREWS	–	PH SMS
14	–	AS REQD.	1/4" X 1" BAR WITH 3/8" THREADED HOLE	ALUMINUM	–
15	3/8" BOLT	AS REQD.	LEVELING SCREW	ST/ST	–
16	–	AS REQD.	TRANSOM MULLION (LAM. GLASS)	6005-T5	–
16A	–	AS REQD.	TRANSOM MULLION (INSUL. LAM. GLASS)	6005-T5	–
17	–	2/ LITE	SETTING BLOCK	EPDM	DUROMETER 80±5 SHORE A

Engr: JAVAD AHMAD
CIVIL
FLA. PE # 70592
C.A.N. 3538

PRODUCT REVISED
as complying with the Florida
Building Code
Acceptance No 15-0430.05
Expiration Date July 25, 2018
By Manuel Perez
Miami Dade Product Control

AL-FAROOQ CORPORATION
ENGINEERS & PRODUCT DEVELOPMENT
1235 S.W. 87 AVE
MIAMI, FLORIDA 33174
TEL. (305) 264-8100 FAX. (305) 262-6978

STORE\W08-34ES

SERIES 7000 ALUM. WINDOW WALL SYSTEM (L.M.I.)

E.S. WINDOWS, LLC
3550 N.W. 49 STREET
MIAMI, FL. 33142
TEL. (305) 638-5151 FAX. (305) 638-5158

revisions:

no	date	by	description
A	06.19.13		REV. PER RER COMMENTS
B	04.03.15		UPDATED TO 2014 FBC
C	07.29.15		NO CHANGE THIS SHEET

date: 04-24-13
scale: 3/8" = 1"
dr. by: HAMID
chk. by:

drawing no.
W08-34

sheet 13 of 13

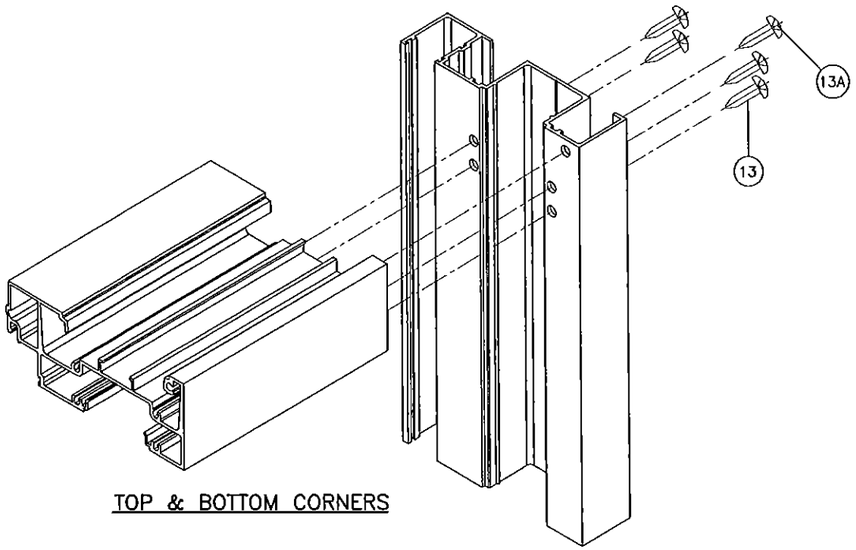

TOP & BOTTOM CORNERS

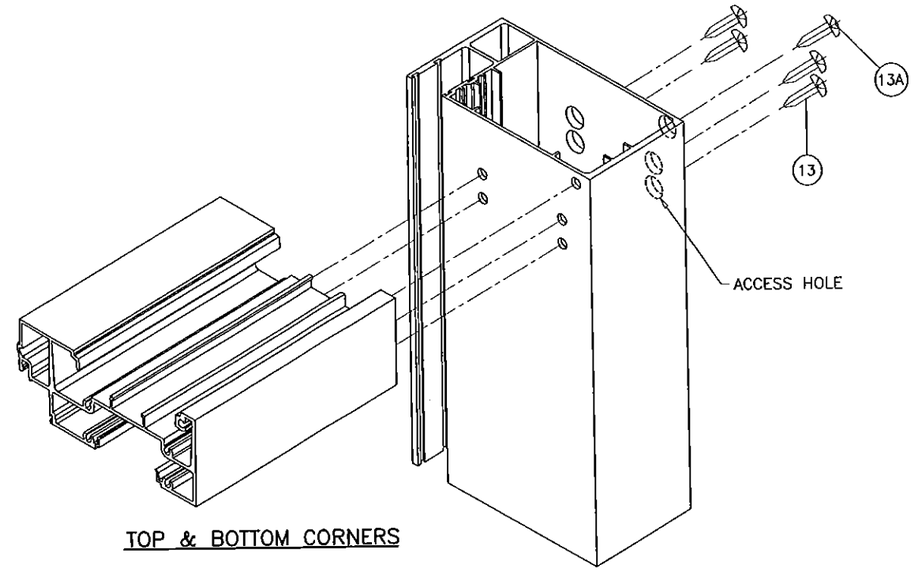

TOP & BOTTOM CORNERS

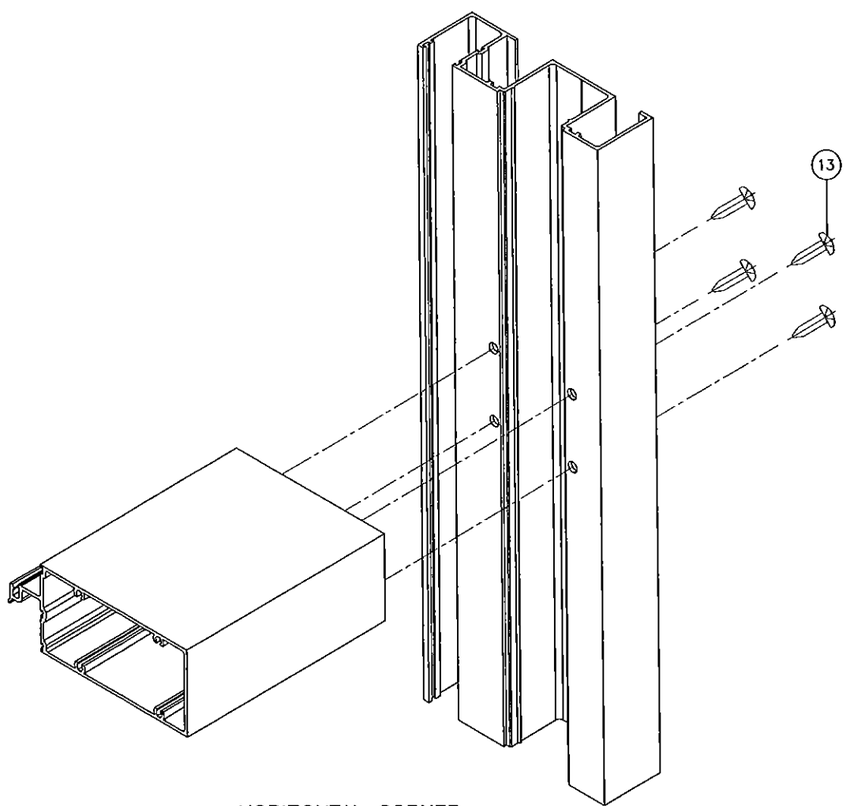

HORIZONTAL CORNER

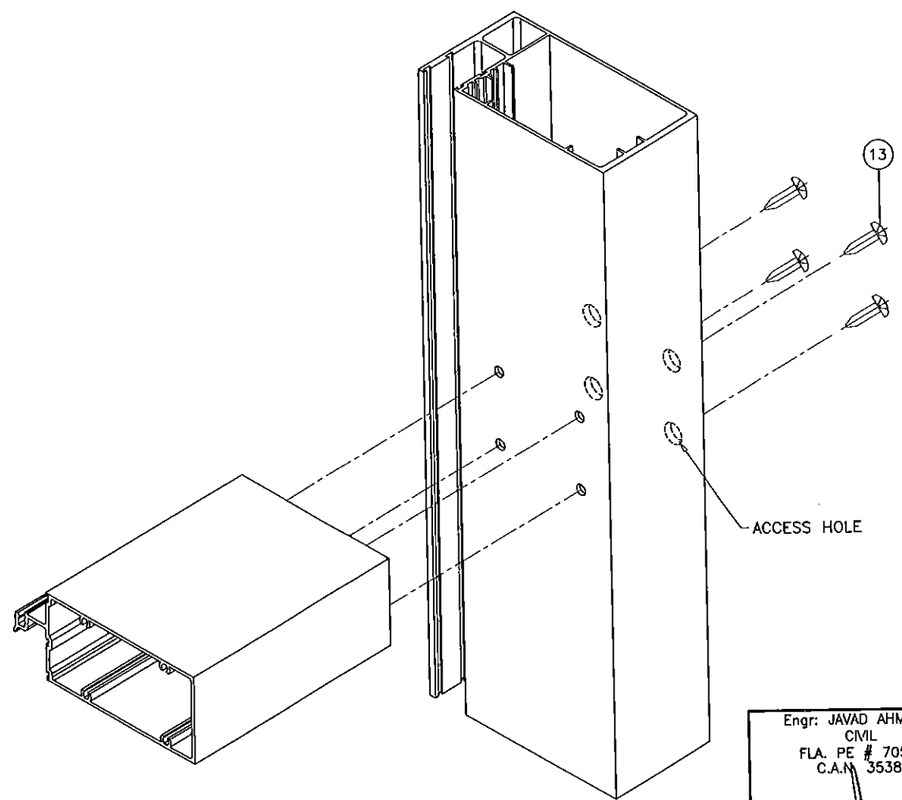

HORIZONTAL CORNER

Engr: JAVAD AHMAD
CIVIL
FLA. PE # 70592
C.A.N. 3538

PRODUCT REVISED
as complying with the Florida
Building Code
Acceptance No 15-0430.05
Expiration Date July 25, 2018
By
Miami Dade Product Control

AL-FAROOQ CORPORATION
ENGINEERS & PRODUCT DEVELOPMENT
1235 S.W. 87 AVE
MIAMI, FLORIDA 33174
TEL. (305) 264-8100 FAX. (305) 262-6978
STORE\W08-34ES

SERIES 7000 ALUM WINDOW WALL SYSTEM (L.M.I.)

E.S. WINDOWS, LLC
3550 N.W. 49 STREET
MIAMI, FL. 33142
TEL. (305) 638-5151 FAX. (305) 638-5158

revisions:

no	date	by	description
A	06.19.13		REV. PER RER COMMENTS
B	04.03.15		UPDATED TO 2014 FBC
C	07.29.15		NO CHANGE THIS SHEET

date: 04-24-13
scale: 3/8" = 1"
dr. by: HAMID
chk. by:

drawing no.
W08-34

sheet 13.1 of 13