MIAMI-DADE COUNTY
PRODUCT CONTROL SECTION
11805 SW 26 Street, Room 208
Miami, Florida 33175-2474
T (786) 315-2590 F (786) 315-2599
www.miamidade.gov/economy

DEPARTMENT OF REGULATORY AND ECONOMIC RESOURCES (RER)
BOARD AND CODE ADMINISTRATION DIVISION

NOTICE OF ACCEPTANCE (NOA)

PGT Industries, Inc.
1070 Technology Drive
North Venice, FL 34275

SCOPE:

This NOA is being issued under the applicable rules and regulations governing the use of construction materials. The documentation submitted has been reviewed and accepted by Miami-Dade County RER -Product Control Section to be used in Miami Dade County and other areas where allowed by the Authority Having Jurisdiction (AHJ).

This NOA shall not be valid after the expiration date stated below. The Miami-Dade County Product Control Section (In Miami Dade County) and/or the AHJ (in areas other than Miami Dade County) reserve the right to have this product or material tested for quality assurance purposes. If this product or material fails to perform in the accepted manner, the manufacturer will incur the expense of such testing and the AHJ may immediately revoke, modify, or suspend the use of such product or material within their jurisdiction. RER reserves the right to revoke this acceptance, if it is determined by Miami-Dade County Product Control Section that this product or material fails to meet the requirements of the applicable building code.

This product is approved as described herein, and has been designed to comply with the Florida Building Code, including the High Velocity Hurricane Zone.

DESCRIPTION: Series "AW-5540" Vinyl Awning Windows – LMI

APPROVAL DOCUMENT: Drawing No. **MD-5540A.0**, titled "Vinyl Awning Window(LM)", sheets 1through 10 of 10, prepared by manufacturer, dated 09/09/14 and last revised on 09/14/15, signed and sealed by Lynn Miller, P.E., bearing the Miami-Dade County Product Control Approval stamp with the Notice of Acceptance number and approval date by the Miami-Dade County Product Control Section.

MISSILE IMPACT RATING: Large and Small Missile Impact Resistant

Limitations:

1. See Awning Window Design Pressure (DP) tables Vs sizes, glass types, hardware & anchor types in sheets 7 & 8.
2. See sheets 5 & 6 for mulled unit (max 4 windows) using Tube mullion (item #90), max mullion span not to exceed **63"** and max DP is limited =**70 PSF**. Lower design of tube mullion, Awning windows or Fixed windows (under separate approval) or Casement Windows (under separate approval) shall control for entire mulled assembly. Two (2) additional anchors at each mull end are required beside the each individual mulled unit anchorage schedules.
3. Units with Glass types **5, 7, 9, 11, 13** and **15** shall **not** be installed **30** FT above the grade.

LABELING: Each unit shall bear a permanent label with the manufacturer's name or logo, city, state and series and following statement: "Miami-Dade County Product Control Approved", noted herein.

RENEWAL of this NOA shall be considered after a renewal application has been filed and there has been no change in the applicable building code negatively affecting the performance of this product.

TERMINATION of this NOA will occur after the expiration date or if there has been a revision or change in the materials, use, and/or manufacture of the product or process. Misuse of this NOA as an endorsement of any product, for sales, advertising or any other purposes shall automatically terminate this NOA. Failure to comply with any section of this NOA shall be cause for termination and removal of NOA.

ADVERTISEMENT: The NOA number preceded by the words Miami-Dade County, Florida, and followed by the expiration date may be displayed in advertising literature. If any portion of the NOA is displayed, then it shall be done in its entirety.

INSPECTION: A copy of this entire NOA shall be provided to the user by the manufacturer or its distributors and shall be available for inspection at the job site at the request of the Building Official.

This NOA and consists of this page 1 and evidence pages E-1 & E-2, as well as approval document mentioned above. The submitted documentation was reviewed by **Ishaq I. Chanda, P.E.**

MIAMI-DADE COUNTY APPROVED

&
9/17/15

NOTICE OF ACCEPTANCE: EVIDENCE SUBMITTED

A. DRAWINGS

1. Manufacturer's die drawings and sections
2. Drawing No. **MD-5540A.0**, titled "Vinyl Awning Window(LM)", sheets 1through 10 of 10, prepared by manufacturer, dated 09/09/14 and last revised on 09/14/15, prepared by PGT Industries, signed and sealed by Anthony Lynn Miller, P.E.

B. TESTS

1. Test reports on: 1) Air Infiltration Test, per FBC, TAS 202–94
   2) Uniform Static Air Pressure Test, Loading per FBC, TAS 202–94
   3) Water Resistance Test, per FBC, TAS 202–94
   4) Large Missile Impact Test per FBC, TAS 201–94
   5) Cyclic Wind Pressure Loading per FBC, TAS 203–94
   6) Forced Entry Test, per FBC 2411.3.2.1, and TAS 202–94

   Along with marked-up drawings and installation diagram of series AW5540/AW5440Vinyl Awning windows, prepared by Fenestration Testing Laboratory, Inc., Test Report No(s). **FTL-8183**, dated 04/02/2014, signed and sealed by Idalmis Ortega, P.E.
2. Test reports on: 1) Air Infiltration Test, per FBC, TAS 202–94
   2) Uniform Static Air Pressure Test, Loading per FBC, TAS 202–94
   3) Water Resistance Test, per FBC, TAS 202–94
   4) Large Missile Impact Test per FBC, TAS 201–94
   5) Cyclic Wind Pressure Loading per FBC, TAS 203–94
   6) Forced Entry Test, per FBC 2411.3.2.1, and TAS 202–94

   Along with marked-up drawings and installation diagram of series 5540/5440 Vinyl Fixed windows w/Tube mullion, prepared by Fenestration Testing Laboratory, Inc., Test Report No(s). **FTL-8174**, dated 03/31/2015, signed and sealed by Idalmis Ortega, P.E.
3. Additional, Reference Fixed window test report **FTL-7897** per TAS 201, 202 & 203-94, issued by Fenestration Testing lab.

C. CALCULATIONS

1. Anchor verification calculations, comparative analysis and structural analysis dated 04/24/15 and last revised on 09/03/15, complying with FBC-214 (**5th** Edition), prepared by PGT, signed and sealed by Lynn Miller, P.E.
2. Glazing complies w/ ASTME-1300-02, 04 & -09.

D. QUALITY ASSURANCE

1. Miami Dade Department of Regulatory and Economic Resources (RER).

Ishaq I. Chanda

Ishaq I. Chanda, P.E.
Product Control Examiner
NOA No. 15-0430.07
Expiration Date: September 24, 2020
Approval Date: September 24, 2015

NOTICE OF ACCEPTANCE: EVIDENCE SUBMITTED

E. MATERIAL CERTIFICATIONS

1. Notice of Acceptance No. **14-0916.10** issued to **Kuraray America, Inc.** (Former E.I. DuPont DeNemours & Co.) for the **"Butacite® PVB Glass Interlayer"**, expiring on 12/11/16.
2. Notice of Acceptance No. **14-0916.11** issued to **Kuraray America, Inc.** (Former E.I. DuPont DeNemours & Co.) for the **"SentryGlas® (Clear and White) Glass Interlayers"**, expiring on 07/04/18.
3. Notice of Acceptance No. **12-1120.02** issued to Royal **Window and Door Profiles, Plant 13** for the "**White Rigid PVC Exterior Extrusions for Windows and Doors**", expiring on 02/28/18.
4. Notice of Acceptance No. **14-0529.13** issued to Royal **Window and Door Profiles, Plant 13** for the "**Bronze and Lighter shades of cap Coated Rigid PVC Exterior Extrusions for Windows and Doors**", expiring on 04/16/20.

F. STATEMENTS

1. Statement letter of conformance to FBC 2014(5th edition) and letter of no financial interest, prepared by PGT, dated 04/24/15, signed and sealed by Lynn Miller, P.E.
2. Lab compliance as part of the above referenced test report.

G. OTHER

1. Test proposal approved dated 09/29/14 and revised on 10/15/14 by Jaime D. Gascon, P.E.

Ishaq I. Chanda

Ishaq I. Chanda, P.E.
Product Control Examiner
NOA No. 15-0430.07
Expiration Date: September 24, 2020
Approval Date: September 24, 2015

GENERAL NOTES: SERIES 5540
IMPACT RESISTANT, VINYL AWNING WINDOW

IMPACT RATING	DESIGN PRESSURE RATING
LARGE & SMALL MISSILE IMPACT RESISTANT	VARIES PER OPTIONS, SEE TABLES 4-6, SHEETS 7 & 8

1) THIS PRODUCT HAS BEEN DESIGNED & TESTED TO COMPLY WITH THE REQUIREMENTS OF THE FLORIDA BUILDING CODE, INCLUDING THE HIGH VELOCITY HURRICANE ZONE (HVHZ).

2) SHUTTERS ARE NOT REQUIRED WHEN USED IN WIND-BORNE DEBRIS REGIONS. FOR INSULATED GLASS INSTALLATIONS ABOVE 30' IN THE HVHZ, THE OUTBOARD LITE (CAP) MUST TEMPERED.

3) FOR MASONRY APPLICATIONS IN MIAMI-DADE COUNTY, USE ONLY MIAMI-DADE COUNTY APPROVED MASONRY ANCHORS. MATERIALS USED FOR ANCHOR EVALUATIONS WERE SOUTHERN PINE, ASTM C90 CONCRETE MASONRY UNITS AND CONCRETE WITH MIN. KSI PER ANCHOR TYPE.

4) ALL WOOD BUCKS LESS THAN 1-1/2" THICK ARE TO BE CONSIDERED 1X INSTALLATIONS. 1X WOOD BUCKS ARE OPTIONAL IF UNIT IS INSTALLED DIRECTLY TO SUBSTRATE. WOOD BUCKS DEPICTED AS 2X ARE 1-1/2" THICK OR GREATER. 1X AND 2X BUCKS (WHEN USED) SHALL BE DESIGNED AND SECURED TO PROPERLY TRANSFER LOADS TO THE STRUCTURE. WOOD BUCK DESIGN AND INSTALLATION IS THE RESPONSIBILITY OF THE ENGINEER, (EOR) OR ARCHITECT OF RECORD, (AOR).

5) ANCHOR EMBEDMENT TO BASE MATERIAL SHALL BE BEYOND WALL DRESSING OR STUCCO. USE ANCHORS OF SUFFICIENT LENGTH TO ACHIEVE EMBEDMENT. INSTALLATION ANCHORS SHOULD BE SEALED. OVERALL SEALING/FLASHING STRATEGY FOR WATER RESISTANCE OF INSTALLATION SHALL BE DONE BY OTHERS AND IS BEYOND THE SCOPE OF THESE INSTRUCTIONS.

6) MAX. 1/4" SHIMS ARE REQUIRED AT EACH ANCHOR LOCATION WHERE THE PRODUCT IS NOT FLUSH TO THE SUBSTRATE. USE SHIMS CAPABLE OF TRANSFERRING APPLIED LOADS. WOOD BUCKS, BY OTHERS, MUST BE SUFFICIENTLY ANCHORED TO RESIST LOADS IMPOSED ON THEM BY THE WINDOW.

7) DESIGN PRESSURES:
A. NEGATIVE DESIGN LOADS BASED ON STRUCTURAL/CYCLE TEST PRESSURE, FRAME ANALYSIS AND GLASS PER ASTM E1300.
B. POSITIVE DESIGN LOADS BASED ON WATER TEST PRESSURE, STRUCTURAL/ CYCLE TEST PRESSURE, FRAME ANALYSIS AND GLASS PER ASTM E1300.

8) THE ANCHORAGE METHODS SHOWN HAVE BEEN DESIGNED AND SECURED TO RESIST THE WINDLOADS CORRESPONDING TO THE REQUIRED DESIGN PRESSURE. THE 33-1/3% STRESS INCREASE HAS NOT BEEN USED IN THE DESIGN OF THIS PRODUCT. THE 1.6 LOAD DURATION FACTOR WAS USED FOR THE EVALUATION OF ANCHORS INTO WOOD. ANCHORS THAT COME INTO CONTACT WITH OTHER DISSIMILAR MATERIALS SHALL MEET THE REQUIREMENTS OF THE FLORIDA BUILDING CODE FOR CORROSION RESISTANCE.

9) METAL SUBSTRATE TO MEET MIN. STRENGTH AND THICKNESS REQUIREMENTS PER CURRENT FLORIDA BUILDING CODE AND TO BE REVIEWED BY THE AUTHORITY HAVING JURISDICTION .

10) REFERENCES: TEST REPORTS FTL-8183, 8174; ELCO ULTRACON NOA; ELCO CRETEFLEX NOA; ELCO AGGRE-GATOR NOA; ROYAL WINDOW AND DOOR PROFILES, LTD WHITE & BRONZE/LIGHTER SHADES OF CAP COATED PVC EXTRUSION NOA'S; NATIONAL DESIGN SPECIFICATION FOR WOOD CONSTRUCTION, ANSI/AF&PA NDS & ALUMINUM DESIGN MANUAL

11) PVB AND SG INTERLAYERS MANUFACTURED BY KURARAY AMERICA, INC.

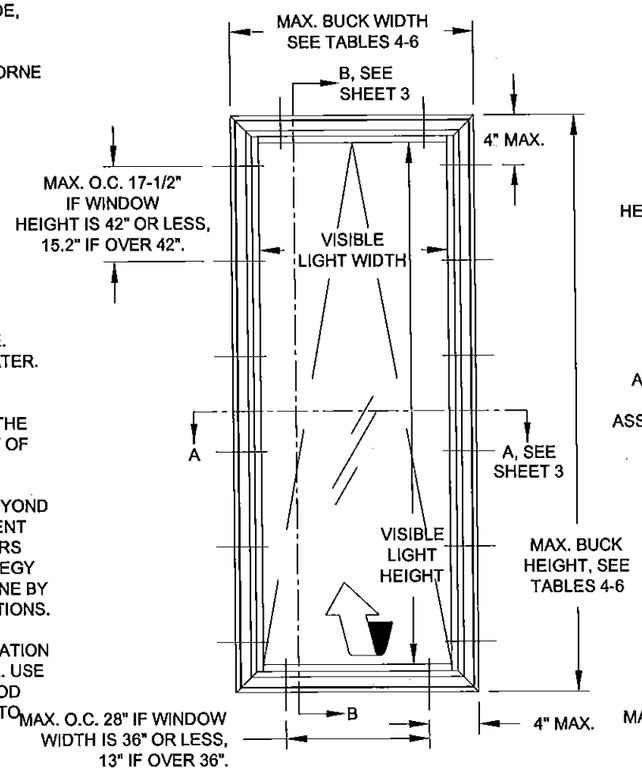

TYP. EQUAL-LEG/BOX & FLANGE FRAME ANCHORAGE

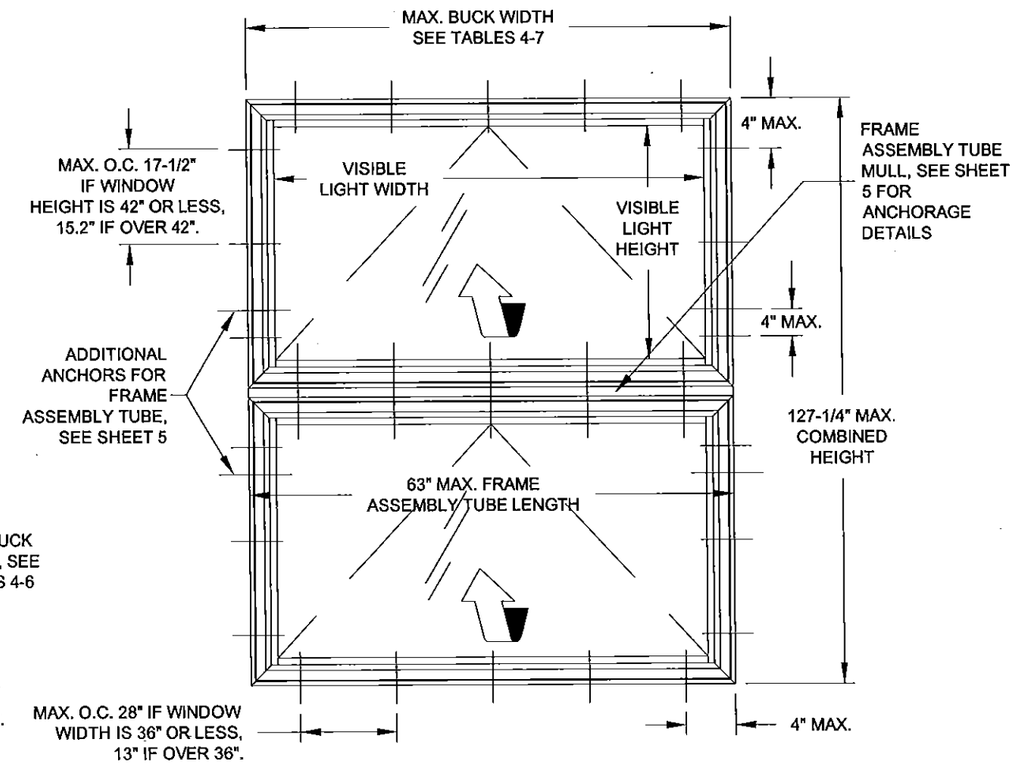

TYP. X/X EQUAL-LEG/BOX & FLANGE FRAME ANCHORAGE USING FRAME ASSEMBLY TUBE/MULL

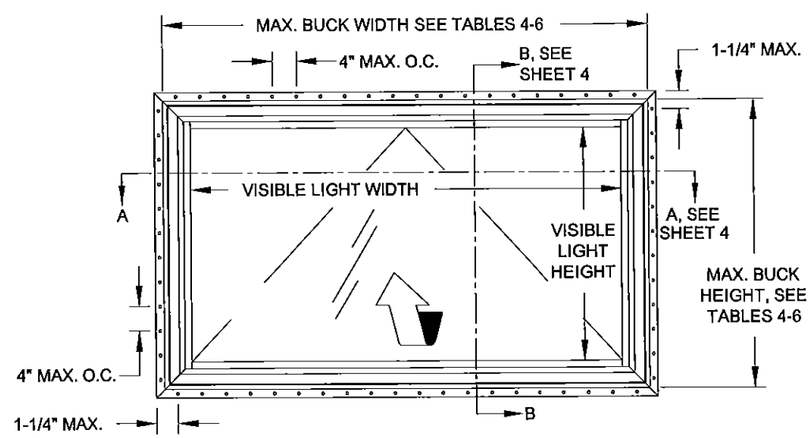

TYP. INTEGRAL FIN & J-CHANNEL FRAME ANCHORAGE

VISIBLE LIGHT FORMULAS
WIDTH: BUCK WIDTH - 6-3/4"
HEIGHT: BUCK HEIGHT - 6-3/4"

GENERAL NOTES..... 1
ELEVATIONS..... 1
FRAME, GLASS & ANCHOR OPTIONS..... 2
INSTALLATION, FLANGE & EQUAL LEG..... 3
INSTALLATION, INTEGRAL FIN & J-CHANNEL..... 4
FRAME ASSEMBLY TUBE..... 5, 6
GLAZING DETAILS / DP TABLE 4 & 5..... 7
GLAZING DETAILS / DP TABLE 6..... 8
BOM & ASSEMBLY..... 9, 10

Approved as complying with the Florida Building Code
Date SEP 24, 2015
NOA# 15-0430.07
Miami Dade Product Control
By Ishaq I. Chaudhry

Rev.	Date	By	
Rev 1			
Rev 2			
Rev 3			

PGT®
CERT. OF AUTH. #29296
1070 TECHNOLOGY DRIVE
N. VENICE, FL 34275
(941)-480-1600

Series	Desc.	Title	Sheet	Scale	DWG No.	Rev.
AW-5540	GENERAL NOTES & ELEVATION	VINYL AWNING WINDOW NOA (LM)	1 OF 10	NTS	MD-5540A.0	

Drawn By: J ROSOWSKI
Date: 9/9/14

ANTHONY LYNN MILLER
LICENSE
No. 58705
STATE OF FLORIDA
PROFESSIONAL ENGINEER
9/14/15
A. LYNN MILLER, P.E.
P.E.# 58705

TABLE 1:

Glass Type	Description	Table #	Sheet #
5	7/8" Laminated I.G.: 1/8" A Exterior Cap + 7/16" Air Space + 5/16" Laminated; (2) Lites of 1/8" A Glass with .090" PVB Interlayer	4, 5	7
6	7/8" Laminated I.G.: 1/8" T Exterior Cap + 7/16" Air Space + 5/16" Laminated; (2) Lites of 1/8" A Glass with .090" PVB Interlayer	4, 5	7
7	7/8" Laminated I.G.: 3/16" A Exterior Cap + 3/8" Air Space + 5/16" Laminated; (2) Lites of 1/8" A Glass with .090" PVB Interlayer	4, 5	7
8	7/8" Laminated I.G.: 3/16" T Exterior Cap + 3/8" Air Space + 5/16" Laminated; (2) Lites of 1/8" A Glass with .090" PVB Interlayer	4, 5	7
9	7/8" Laminated I.G.: 1/8" A Exterior Cap + 7/16" Air Space + 5/16" Laminated; (2) Lites of 1/8" HS Glass with .090" SG Interlayer	6	8
10	7/8" Laminated I.G.: 1/8" T Exterior Cap + 7/16" Air Space + 5/16" Laminated; (2) Lites of 1/8" HS Glass with .090" SG Interlayer	6	8
11	7/8" Laminated I.G.: 3/16" A Exterior Cap + 3/8" Air Space + 5/16" Laminated; (2) Lites of 1/8" HS Glass with .090" SG Interlayer	6	8
12	7/8" Laminated I.G.: 3/16" T Exterior Cap + 3/8" Air Space + 5/16" Laminated; (2) Lites of 1/8" HS Glass with .090" SG Interlayer	6	8
13	7/8" Laminated I.G.: 1/8" A Exterior Cap + 5/16" Air Space + 7/16" Laminated; (2) Lites of 3/16" A Glass with .090" SG Interlayer	6	8
14	7/8" Laminated I.G.: 1/8" T Exterior Cap + 5/16" Air Space + 7/16" Laminated; (2) Lites of 3/16" A Glass with .090" SG Interlayer	6	8
15	7/8" Laminated I.G.: 3/16" A Exterior Cap + 1/4" Air Space + 7/16" Laminated; (2) Lites of 3/16" A Glass with .090" SG Interlayer	6	8
16	7/8" Laminated I.G.: 3/16" T Exterior Cap + 1/4" Air Space + 7/16" Laminated; (2) Lites of 3/16" A Glass with .090" SG Interlayer	6	8

"A" = ANNEALED
"H" = HEAT STRENGTHENED
"T" = TEMPERED
"PVB" = .090" PVB INTERLAYER
"SG" = .090" SENTRYGLAS INTERLAYER

ALL INTERLAYERS MANUFACTURED BY KURARAY AMERICA, INC.

TABLE 2: ANCHORS INSTALLED THROUGH FRAME

Group	Anchor	Substrate	Min. Edge Distance	Min. Embedment*
A	#10 SMS (steel, 18-8 S.S. or 410 S.S.)	P.T. Southern Pine (SG=0.55)	7/16"	1-3/8"
		Steel, A36*	3/8"	0.050"
		Steel Stud, A653 Gr. 33*	3/8"	0.0451" (18 Ga.)
		Aluminum, 6063-T5*	3/8"	0.050"
	3/16" steel Ultracon	P.T. Southern Pine (SG=0.55)	7/16"	1-3/8"
		Concrete (min. 2.85 ksi)	1"	1-3/8"
		Ungrouted CMU, (ASTM C-90)	2-1/2"	1-1/4"
B	#12 SMS (steel, 18-8 S.S. or 410 S.S.)	P.T. Southern Pine (SG=0.55)	9/16"	1-3/8"
		Steel, A36*	3/8"	0.050"
		Steel Stud, A653 Gr. 33*	3/8"	0.0451" (18 Ga.)
		Aluminum, 6063-T5*	3/8"	0.063"
C	1/4" steel Ultracon	Concrete (min. 2.85 ksi)	1"	1-3/4"
		Ungrouted CMU, (ASTM C-90)	2-1/2"	1-1/4"
	1/4" steel Creteflex	Concrete (min. 3.35 ksi)	1"	1-3/4"
D	1/4" steel Ultracon	P.T. Southern Pine (SG=0.55)	1"	1-3/8"
	1/4" steel Creteflex	Ungrouted CMU, (ASTM C-90)	2-1/2"	1-1/4"
		P.T. Southern Pine (SG=0.55)	1"	1-3/8"
	1/4" steel Aggre-Gator	P.T. Southern Pine (SG=0.55)	1"	1-3/8"
		Grouted CMU, (ASTM C-90)	2"	2"
	1/4" steel Ultracon	Concrete (min. 2.85 ksi)	2-1/2"	1-3/4"
	1/4" steel Creteflex	Concrete (min. 3.35 ksi)	2-1/2"	1-3/4"
	1/4" steel Aggre-Gator	Concrete (min. 3.275 ksi)	1-1/2"	1-3/8"

* MIN. OF 3 THREADS BEYOND THE METAL SUBSTRATE. FOR STEEL STUDS, MIN Fu=45 KSI.

"UNGROUTED CMU" VALUES MAY BE USED FOR GROUTED CMU APPLICATIONS.

GLASS TYPES 9 THROUGH 16 MAY NOT BE USED WITH J-CHANNEL OR INTEGRAL FIN FRAMES.

GLASS TYPES 5, 7, 9, 11, 13 & 15 MAY NOT BE USED IN THE HVHZ ABOVE 30'.

WINDOW FRAMES MAY BE ANY OF THOSE SHOWN BELOW:

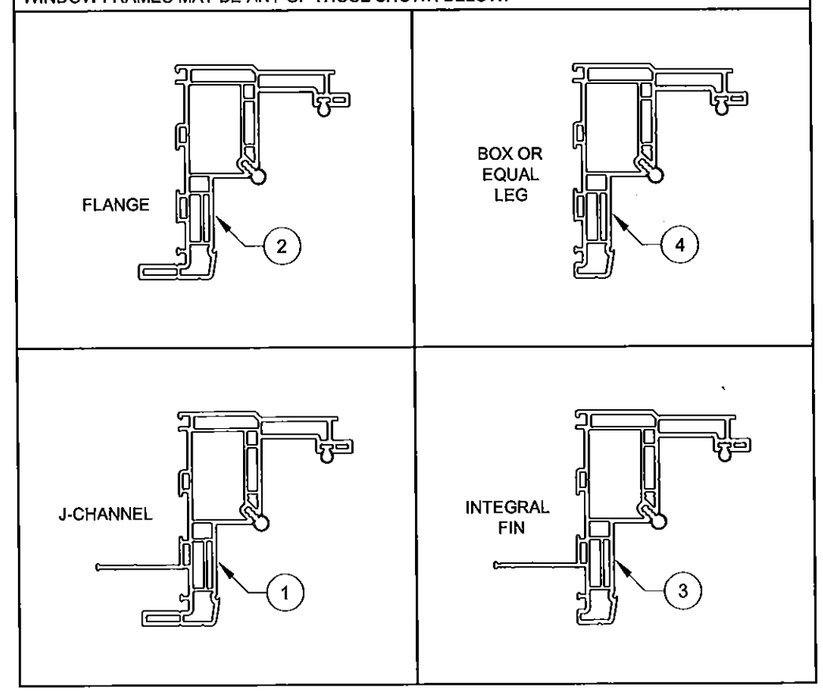

NOTE: SEE DETAILS AND DIMENSIONS ON SHEET 10

TABLE 3: ANCHORS INSTALLED THROUGH INTEGRAL FIN

Group	Anchor	Substrate	Min. Edge Distance	Min. Embedment*
E	2-1/2" x .131" Common Nail	P.T. Southern Pine (SG=.55)	3/8"	2-7/16"
F	2-1/2" Ring-shank Roofing Nail	P.T. Southern Pine (SG=.55)	3/8"	2-7/16"
	#10 Trusshead SMS (steel, 18-8 S.S. or 410 S.S.)	P.T. Southern Pine (SG=.55)	1/2"	1-3/8"
		Aluminum, 6063-T5*	3/8"	0.050"
		Steel Stud, Gr. 33*	3/8"	0.0451" (18 Ga.)
		Steel, A36*	3/8"	0.050"
	#12 SMS (steel, 18-8 S.S. or 410 S.S.)	P.T. Southern Pine (SG=.55)	9/16"	1-3/8"
		Aluminum, 6063-T5*	3/8"	0.063"
		Steel Stud, Gr. 33*	3/8"	0.050"
		Steel, A36*	3/8"	0.050"

* MIN. OF 3 THREADS BEYOND THE METAL SUBSTRATE. FOR STEEL STUDS, MIN Fu=45 KSI.

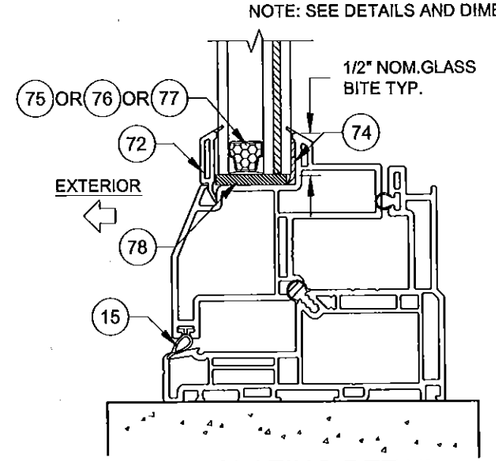

TYP. GLAZING DETAIL

Approved as complying with the Florida Building Code
Date 9/24/15
NOA# 15-0430.07
Miami Dade Product Control
By Khagl. Chant

ANTHONY LYNN MILLER
LICENSE
No. 58705
9/14/15
STATE OF FLORIDA
PROFESSIONAL ENGINEER

A. LYNN MILLER, P.E.
P.E.# 58705

PGT®
CERT. OF AUTH. #29296
1070 TECHNOLOGY DRIVE
N. VENICE, FL 34275
(941)-480-1600

Title	VINYL AWNING WINDOW NOA (LM)	Date	9/9/14
Desc.	GLASS/ANCHORS/FRAME OPTIONS	Drawn By	J ROSOWSKI
Rev 1		Rev 1 Date	
Rev 2		Rev 2 Date	
Series	AW-5540	Scale	NTS
Sheet	2 OF 10	DWG No.	MD-5540A.0
Rev. No.			

INSTALLATION DETAILS FOR FLANGE & EQUAL-LEG/BOX FRAMES

INSTALLATION OPTION 1

ANCHORED THROUGH FRAME INTO 2X WOOD FRAME OR BUCKSTRIP. SEE NOTE 2, THIS SHEET.

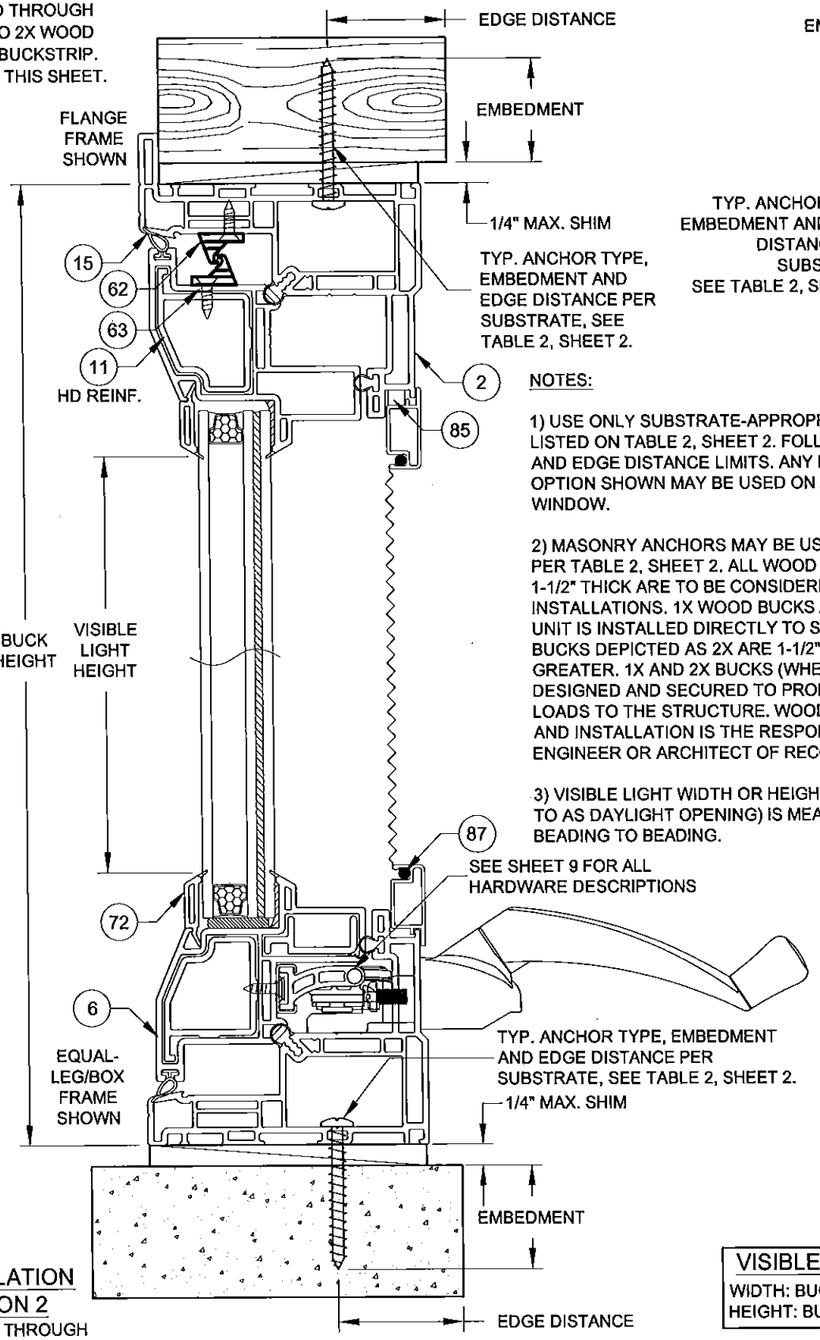

INSTALLATION OPTION 2

ANCHORED THROUGH FRAME DIRECTLY INTO CONCRETE/CMU.

INSTALLATION OPTION 3

ANCHORED THROUGH FRAME AND 1X BUCKSTRIP INTO CONCRETE/CMU. SEE NOTE 2, THIS SHEET.

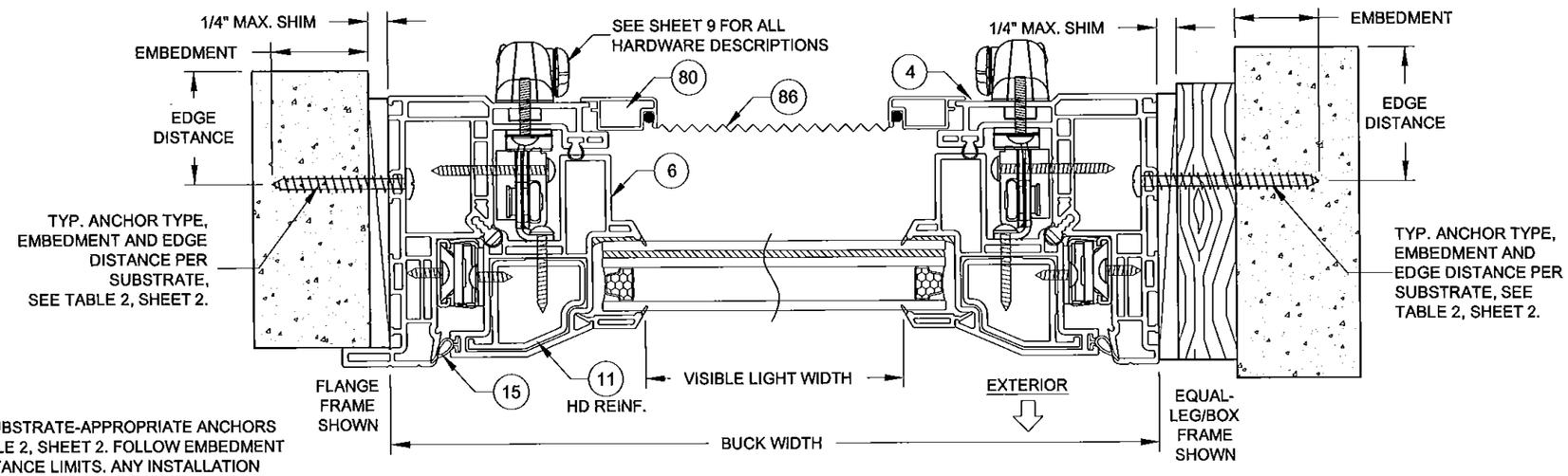

HORIZONTAL SECTION A-A

NOTES:

1) USE ONLY SUBSTRATE-APPROPRIATE ANCHORS LISTED ON TABLE 2, SHEET 2. FOLLOW EMBEDMENT AND EDGE DISTANCE LIMITS. ANY INSTALLATION OPTION SHOWN MAY BE USED ON ANY SIDE OF THE WINDOW.

2) MASONRY ANCHORS MAY BE USED INTO WOOD AS PER TABLE 2, SHEET 2. ALL WOOD BUCKS LESS THAN 1-1/2" THICK ARE TO BE CONSIDERED 1X INSTALLATIONS. 1X WOOD BUCKS ARE OPTIONAL IF UNIT IS INSTALLED DIRECTLY TO SUBSTRATE. WOOD BUCKS DEPICTED AS 2X ARE 1-1/2" THICK OR GREATER. 1X AND 2X BUCKS (WHEN USED) SHALL BE DESIGNED AND SECURED TO PROPERLY TRANSFER LOADS TO THE STRUCTURE. WOOD BUCK DESIGN AND INSTALLATION IS THE RESPONSIBILITY OF THE ENGINEER OR ARCHITECT OF RECORD.

3) VISIBLE LIGHT WIDTH OR HEIGHT (ALSO REFERRED TO AS DAYLIGHT OPENING) IS MEASURED FROM BEADING TO BEADING.

DADE APPROVED MULLION, ALUMINUM/STEEL FRAMING OR STEEL STUD. MAY BE VERTICAL OR HORIZONTAL. SEE SUBSTRATE PROPERTIES, TABLE 2, SHEET 2.

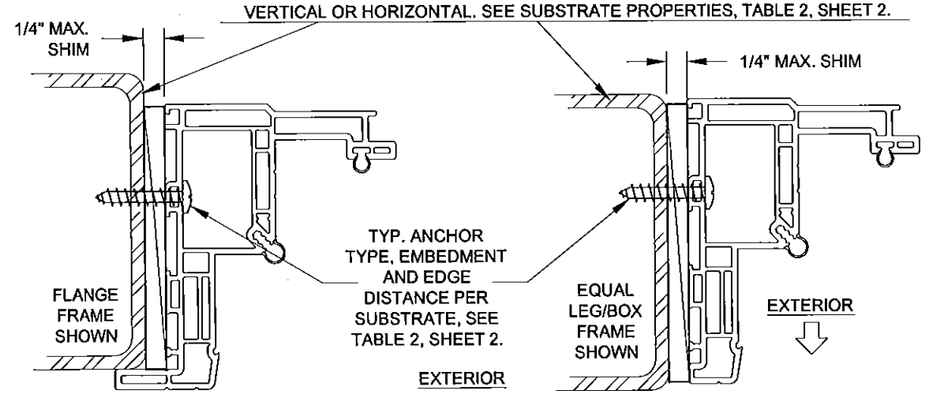

INSTALLATION OPTION 4

ANCHORED THROUGH FRAME INTO METAL

INSTALLATION OPTION 4

ANCHORED THROUGH FRAME INTO METAL

INSTALLATION OPTION 2

ANCHORED THROUGH FRAME DIRECTLY INTO CONCRETE/CMU.

VERTICAL SECTION B-B

VISIBLE LIGHT FORMULAS

WIDTH: BUCK WIDTH - 6-3/4"
HEIGHT: BUCK HEIGHT - 6-3/4"

Approved as complying with the Florida Building Code
Date 9/24/15
NOA# 15-0430.07
Miami Dade Product Control
By Ishaq I. Chaus

ANTHONY LYNN MILLER
LICENSE
No. 58705
STATE OF FLORIDA
PROFESSIONAL ENGINEER
9/24/15

A. LYNN MILLER, P.E.
P.E.# 58705

PGT®
CERT. OF AUTH. #29296
1070 TECHNOLOGY DRIVE
N. VENICE, FL 34275
(941)-480-1600

Title	VINYL AWNING WINDOW NOA (LM)			Date	9/9/14
Desc.	FLANGE & EQUAL-LEG/BOX FRAMES			Drawn By	J ROSOWSKI
Rev 1				Rev 1 Date	
Rev 2				Rev 2 Date	
Series	AW-5540	Scale NTS	Sheet 3 OF 10	DWG No.	MD-5540A.0
				Rev. No.	

INSTALLATION DETAILS FOR INTEGRAL FIN & J-CHANNEL FRAMES

INSTALLATION OPTION 5

ANCHORED THROUGH INTEGRAL FIN INTO 2X WOOD FRAME OR BUCKSTRIP. SEE NOTE 2, THIS SHEET.

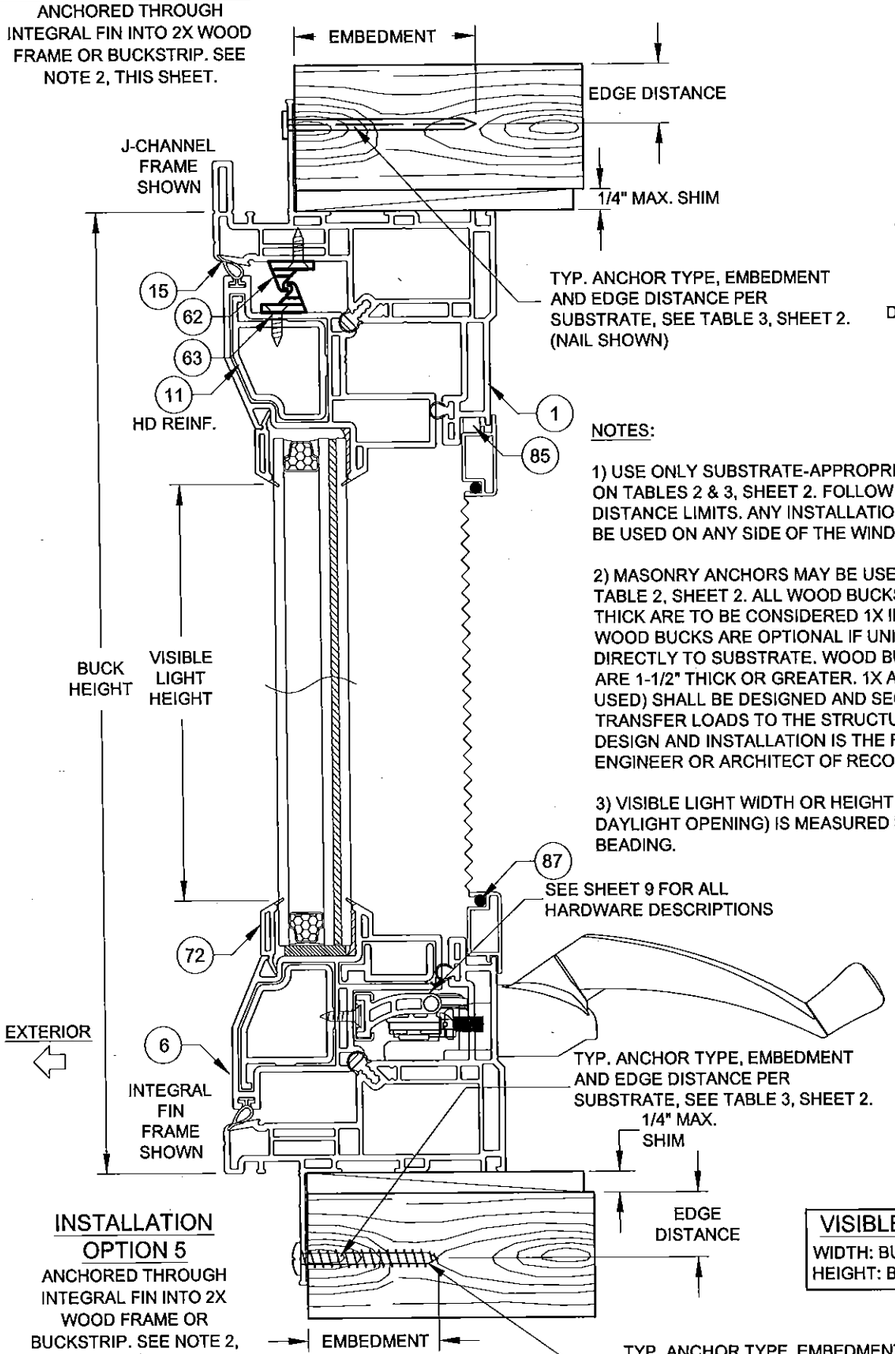

INSTALLATION OPTION 5

ANCHORED THROUGH INTEGRAL FIN INTO 2X WOOD FRAME OR BUCKSTRIP. SEE NOTE 2, THIS SHEET.

EMBEDMENT

VERTICAL SECTION D-D

NOTES:

1) USE ONLY SUBSTRATE-APPROPRIATE ANCHORS LISTED ON TABLES 2 & 3, SHEET 2. FOLLOW EMBEDMENT AND EDGE DISTANCE LIMITS. ANY INSTALLATION OPTION SHOWN MAY BE USED ON ANY SIDE OF THE WINDOW.

2) MASONRY ANCHORS MAY BE USED INTO WOOD AS PER TABLE 2, SHEET 2. ALL WOOD BUCKS LESS THAN 1-1/2" THICK ARE TO BE CONSIDERED 1X INSTALLATIONS. 1X WOOD BUCKS ARE OPTIONAL IF UNIT IS INSTALLED DIRECTLY TO SUBSTRATE. WOOD BUCKS DEPICTED AS 2X ARE 1-1/2" THICK OR GREATER. 1X AND 2X BUCKS (WHEN USED) SHALL BE DESIGNED AND SECURED TO PROPERLY TRANSFER LOADS TO THE STRUCTURE. WOOD BUCK DESIGN AND INSTALLATION IS THE RESPONSIBILITY OF THE ENGINEER OR ARCHITECT OF RECORD.

3) VISIBLE LIGHT WIDTH OR HEIGHT (ALSO REFERRED TO AS DAYLIGHT OPENING) IS MEASURED FROM BEADING TO BEADING.

VISIBLE LIGHT FORMULAS
WIDTH: BUCK WIDTH - 6-3/4"
HEIGHT: BUCK HEIGHT - 6-3/4"

INSTALLATION OPTION 6

ANCHORED THROUGH FRAME INTO 2X WOOD FRAME OR BUCKSTRIP. SEE NOTE 2, THIS SHEET.

INSTALLATION OPTION 5

ANCHORED THROUGH INTEGRAL FIN INTO 2X WOOD FRAME OR BUCKSTRIP. SEE NOTE 2, THIS SHEET.

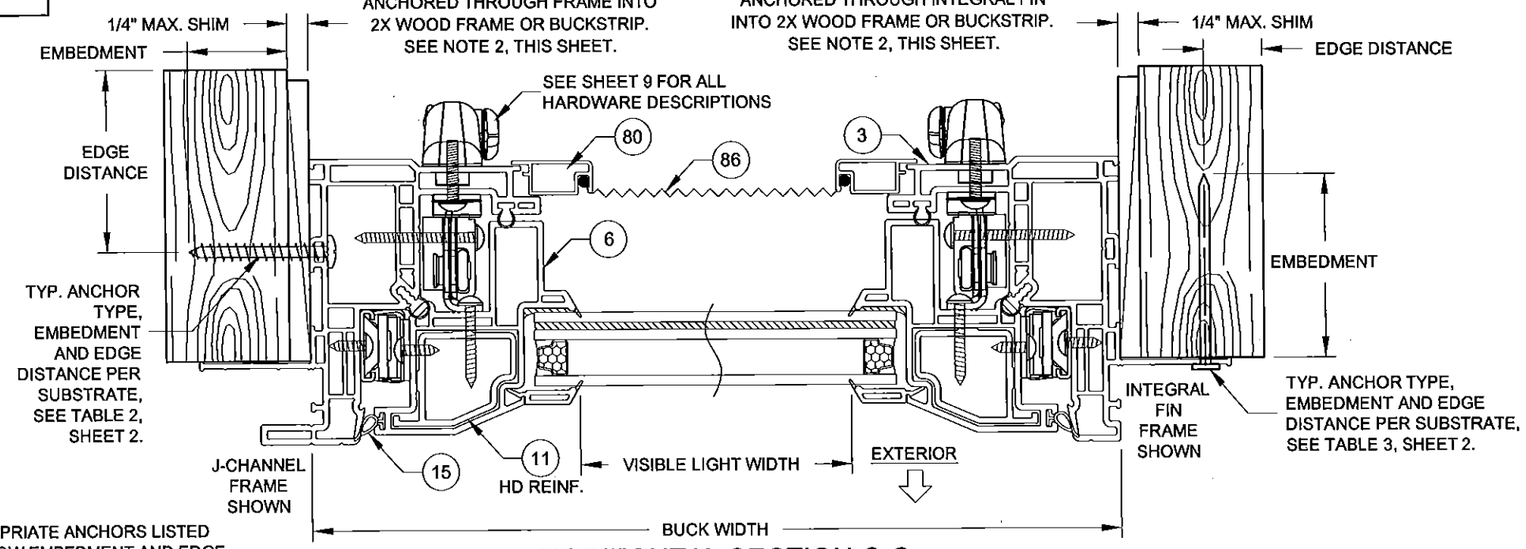

HORIZONTAL SECTION C-C

DADE APPROVED MULLION, ALUMINUM/STEEL FRAMING OR STEEL STUD. MAY BE VERTICAL OR HORIZONTAL. SEE SUBSTRATE PROPERTIES, TABLES 2 & 3, SHEET 2.

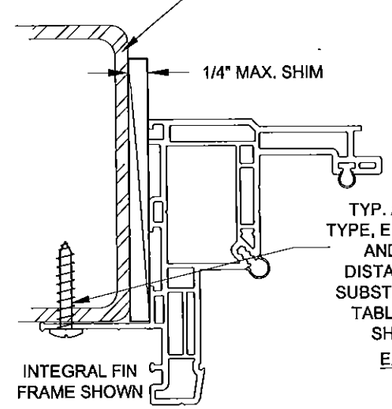

INSTALLATION OPTION 7

ANCHORED THROUGH FRAME INTO METAL

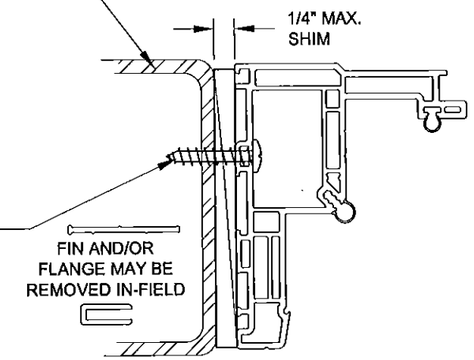

INSTALLATION OPTION 8

ANCHORED THROUGH FRAME INTO METAL

Approved as complying with the Florida Building Code
Date 9/24/15
NOA# 15-0430.07
Miami Dade Product Control
By Ishaq I. Chand

ANTHONY LYNN MILLER LICENSE No. 58705 STATE OF FLORIDA PROFESSIONAL ENGINEER
9/14/15

A. LYNN MILLER, P.E.
P.E.# 58705

PGT®
CERT. OF AUTH. #29296
1070 TECHNOLOGY DRIVE
N. VENICE, FL 34275
(941)-480-1600

Title	VINYL AWNING WINDOW NOA (LM)			Date	9/9/14
Desc.	J-CHANNEL & INTEGRAL FIN FRAMES			Drawn By	J ROSOWSKI
Rev 1				Rev 1 Date	
Rev 2				Rev 2 Date	
Series	AW-5540	Scale NTS	Sheet 4 OF 10	DWG No. MD-5540A.0	Rev. No.

ILLUSTRATION OF AWNING-TO-AWNING (XX)

(EQUAL LEG/BOX FRAME WITH IDENTICAL PRODUCTS COMBINED)

A) INDIVIDUAL COMPONENTS:

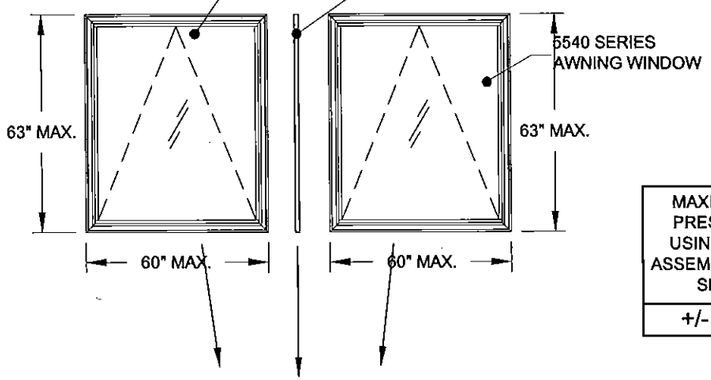

MAXIMUM DESIGN PRESSURE WHEN USING THE FRAME ASSEMBLY TUBE/MULL, SEE NOTE 2:
+/- 70.0 PSF

B) COMBINED COMPONENTS:

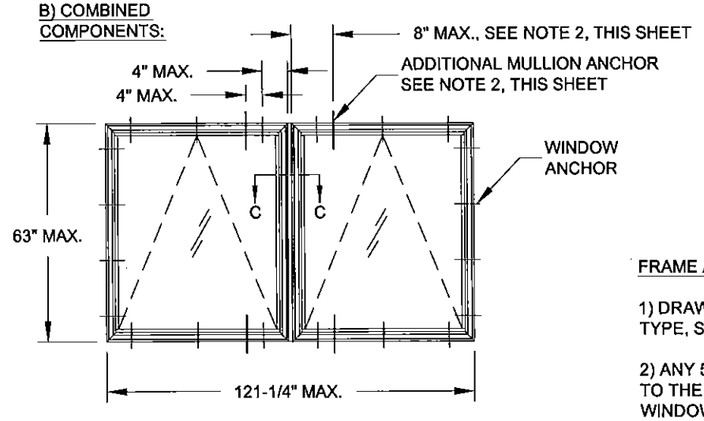

C) HORIZONTAL SECTION C-C:

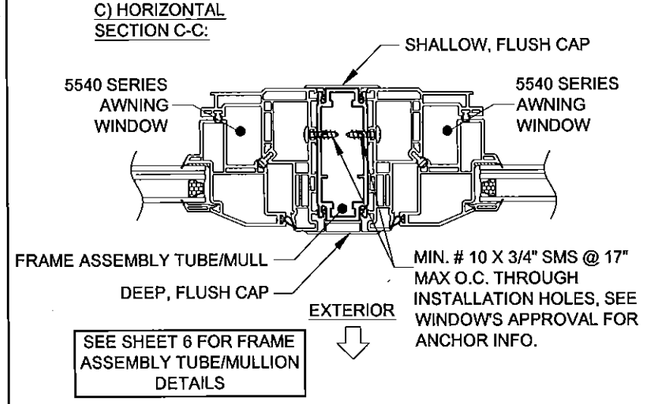

SEE SHEET 6 FOR FRAME ASSEMBLY TUBE/MULLION DETAILS

ILLUSTRATION OF AWNING-TO-CASEMENT-TO-FIXED CASEMENT (X/X/O)

(FLANGE FRAME WITH DIFFERENT 5540 SERIES PRODUCTS COMBINED)

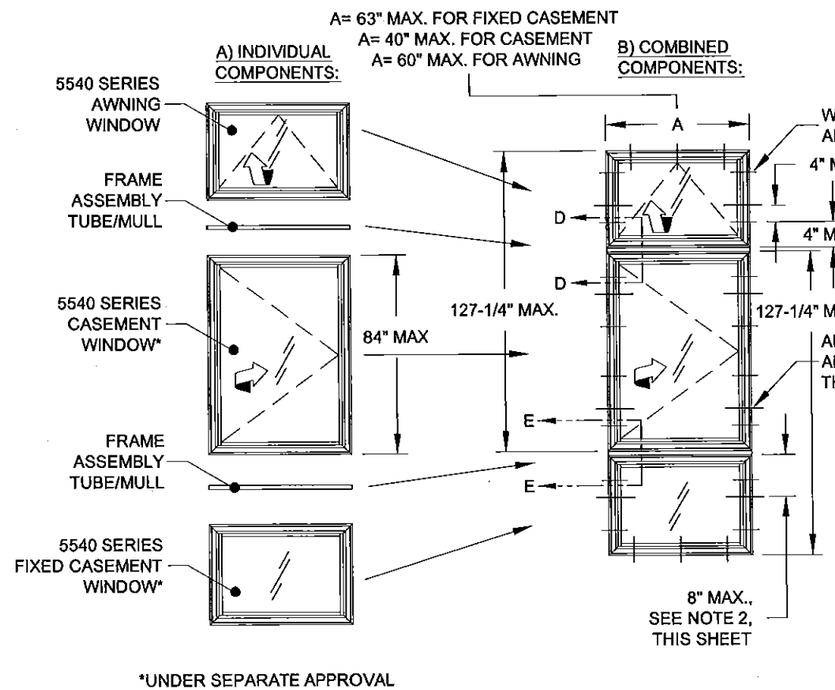

*UNDER SEPARATE APPROVAL

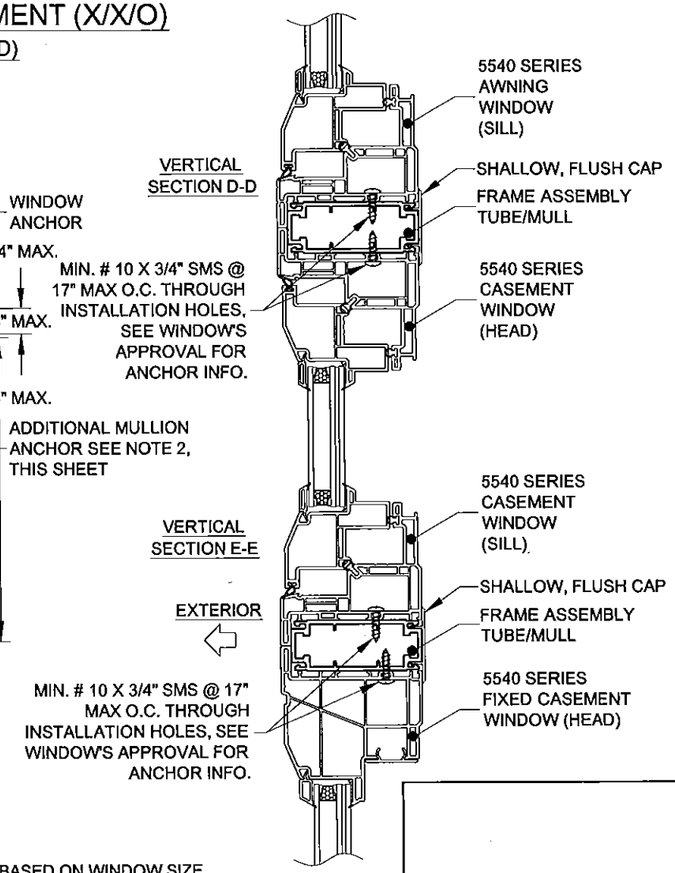

FRAME ASSEMBLY TUBE/MULL NOTES, ALSO SEE NEXT SHEET:

1) DRAWINGS SHOWN ON THIS SHEET ARE EXAMPLE CONFIGURATIONS FOR ALL FRAME TYPES. ADDITIONAL CONFIGURATIONS BASED ON WINDOW SIZE, TYPE, SHAPE, QUANTITY AND FRAME ASSEMBLY TUBE ORIENTATION ARE PERMISSIBLE FOLLOWING THE GUIDELINES OF THIS SHEET.

2) ANY 5540-SERIES CASEMENT (UNDER SEPARATE APPROVAL), FIXED CASEMENT (UNDER SEPARATE APPROVAL) OR AWNING WINDOW MAY BE ATTACHED TO THE FRAME ASSEMBLY TUBE/MULL, IN ANY COMBINATION TO THE SPAN AND WIDTH LIMIT SHOWN. FOR ALL WINDOWS IN THE ASSEMBLY, USE EACH WINDOW'S INDIVIDUAL APPROVAL FOR ANCHORAGE, SIZE AND DESIGN PRESSURE LIMITATIONS. THE LOWEST DESIGN PRESSURE OF THE WINDOWS OR FRAME ASSEMBLY TUBE/MULL APPLIES TO THE ENTIRE ASSEMBLY .

3) FOR ALL COMBINATION UNITS, ADDITIONAL INSTALLATION ANCHORS ARE REQUIRED TO BE INSTALLED THROUGH THE WINDOW FRAMES, AS SHOWN ON THIS SHEET, ON EACH SIDE OF THE FRAME ASSEMBLY TUBE/MULL WHEN USING FLANGE OR EQUAL-LEG/BOX FRAMES. FOR FIN OR J-CHANNEL FRAMES ADDITIONAL ANCHORS AND END CAPS ARE REQUIRED AS SHOWN ON SHEET 6.

4) FOR FLANGE OR EQUAL-LEG/BOX FRAMES, THE FRAME ASSEMBLY TUBE TO BE FASTENED TO WINDOW, AS SHOWN IN DETAILS, WITH MIN. #10 X 1" SHEET METAL SCREWS. USE THE SAME SPACING AND QUANTITY AS THE WINDOW INSTALLATION ANCHORS GIVEN IN THAT PRODUCT'S APPROVAL, UP TO 17" MAX. O.C., ADD ADDITIONAL ANCHORS AS NEEDED. THE FRAME ASSEMBLY TUBE IS NOT REQUIRED TO BE CLIPPED TO THE SUBSTRATE. ALL EXTERIOR JOINTS TO BE SEALED BY INSTALLER.

5) THE FRAME ASSEMBLY TUBE/MULL MAY NOT EXCEED 63" IN LENGTH OR BE USED IN TEE OR CROSS CONFIGURATIONS. TWO ADJACENT WINDOWS MAY NOT EXCEED A TOTAL OF 127-1/4" IN WIDTH OR HEIGHT, FROM WINDOW BUCK TO WINDOW BUCK, INCLUDING THE FRAME ASSEMBLY TUBE/MULL WIDTH.

6) SHEET 5 & 6 REFER TO UNCLIPPED MULLION ASSEMBLIES. FOR CLIPPED MULLION ASSEMBLIES SEE TUBE MULLION UNDER SEPARATE APPROVAL, TO BE REVIEWED BY BUILDING OFFICIAL.

Approved as complying with the Florida Building Code
Date 9/24/15
NOA# 15-0430.07
Miami Dade Product Control
By Ishaq I. Chanda

ANTHONY LYNN MILLER
LICENSE
No. 58705
9/14/15
STATE OF FLORIDA
PROFESSIONAL ENGINEER
A. LYNN MILLER, P.E.
P.E.# 58705

PGT®
CERT. OF AUTH. #29296
1070 TECHNOLOGY DRIVE
N. VENICE, FL 34275
(941)-480-1600

Title	VINYL AWNING WINDOW NOA (LM)			Date	9/9/14
Desc.	FRAME ASSEMBLY TUBE DETAILS A			Drawn By	J ROSOWSKI
Rev 1				Rev 1 Date	
Rev 2				Rev 2 Date	
Series	AW-5540	Scale NTS	Sheet 5 OF 10	DWG No. MD-5540A.0	Rev. No.

ILLUSTRATION OF END CAP USE WITH FIN AND J-CHANNEL FRAMES

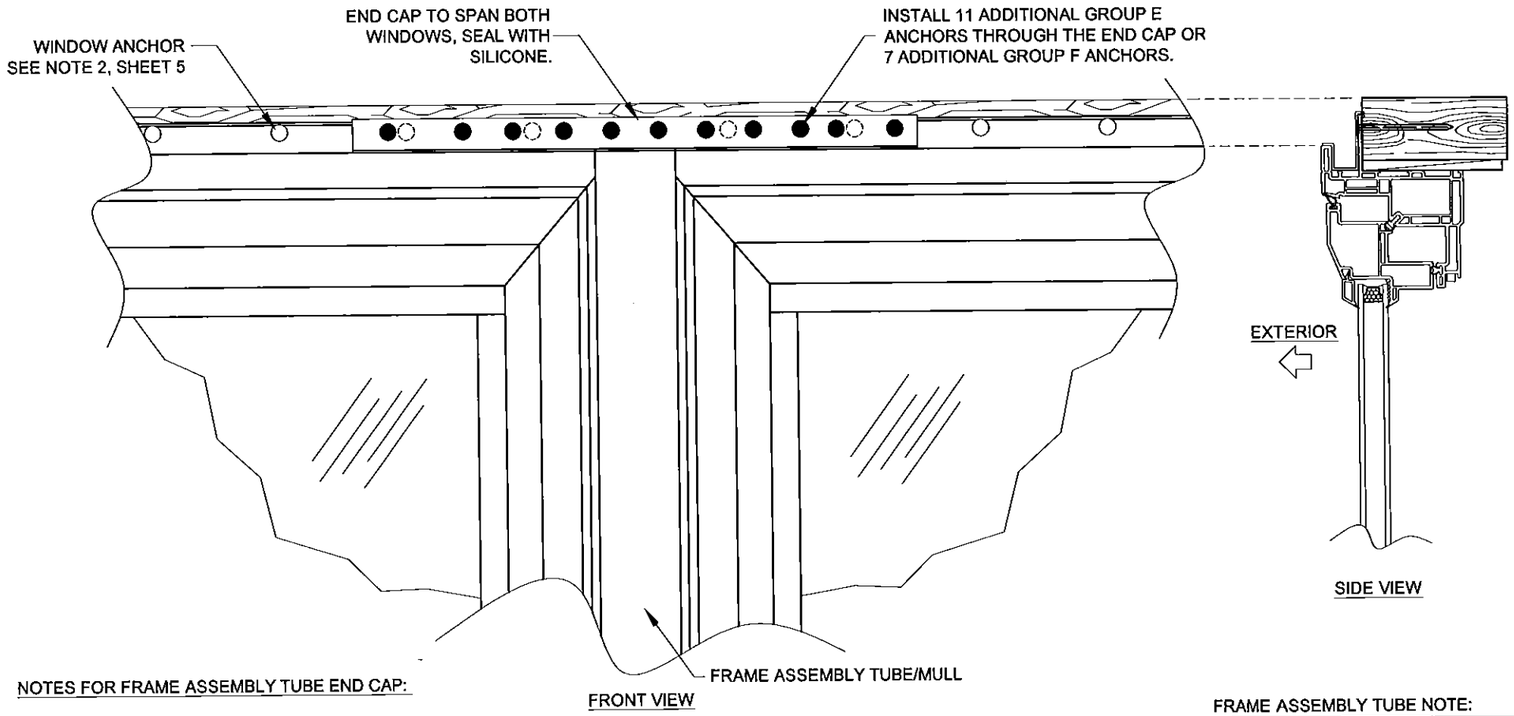

NOTES FOR FRAME ASSEMBLY TUBE END CAP:

1) APPLIES TO FIN OR J-CHANNEL FRAMES.

2) REQUIRED AT HEADER/SILL OR JAMBS TO SEAL THE END OF THE FRAME ASSEMBLY TUBE.

3) ALL WINDOW TYPES AND FRAME ASSEMBLY TUBE ORIENTATIONS APPLICABLE, SEE SHEET 5.

4) END CAP MAY REQUIRE IN-FIELD TRIMMING. STANDARD LENGTH IS 14".

EXAMPLE CONFIGURATIONS WHEN USING THE FRAME ASSEMBLY TUBE/MULL. FOR TEES, CROSSES OR ASSEMBLIES WITH MORE THAN 4 UNITS USE CLIPPED, TUBE MULLION UNDER SEPARATE APPROVAL.

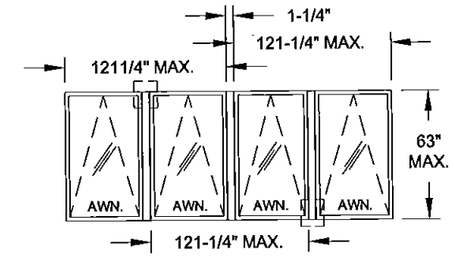

2 OR MORE WINDOWS WITH VERTICAL FRAME ASSEMBLY TUBE/MULL. (4 WINDOWS MAX.)

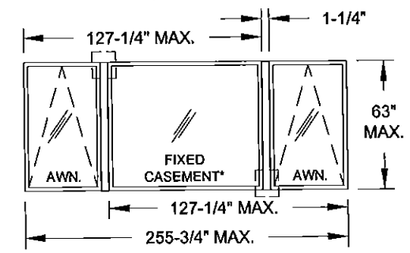

2 OR MORE WINDOWS WITH VERTICAL FRAME ASSEMBLY TUBE/MULL. VARIOUS WINDOW TYPES AND SIZES (4 WINDOWS MAX.)

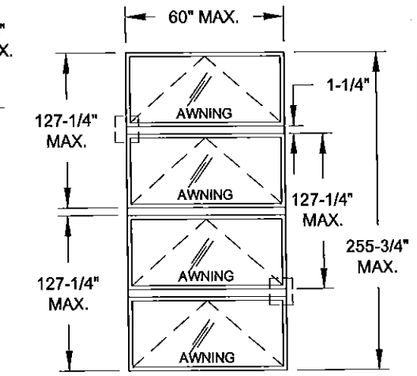

2 OR MORE WINDOWS (4 WINDOWS MAX.) WITH HORIZONTAL FRAME ASSEMBLY TUBE/MULL.

A= 63" MAX. FOR FIXED CASEMENT
A= 40" MAX. FOR CASEMENT
A= 60" MAX. FOR AWNING

FRAME ASSEMBLY TUBE NOTE:

REFER TO SHEET 5 FOR THROUGH-FRAME ANCHORAGE AND THIS SHEET FOR NAIL FIN ANCHORAGE DETAILS TYP. AT ALL FRAME ASSEMBLY TUBE ENDS BOTH HORIZONTAL AND VERTICAL

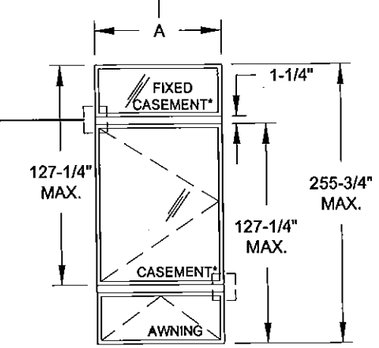

2 OR MORE WINDOWS (4 WINDOWS MAX.) WITH HORIZONTAL FRAME ASSEMBLY TUBE/MULL. VARIOUS WINDOW TYPES AND SIZES.

*UNDER SEPARATE APPROVAL

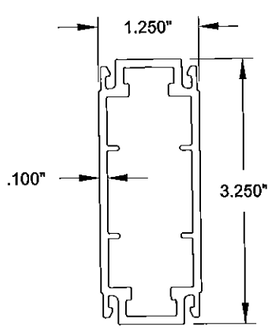

(90) FRAME ASSEMBLY TUBE, ALUM 6005-T5

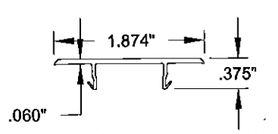

(91) SHALLOW, FLUSH CAP, PVC

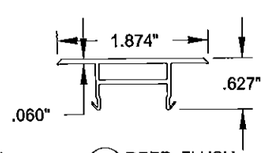

(92) DEEP, FLUSH CAP, PVC

EITHER CAP MAY BE USED TO THE INTERIOR OR EXTERIOR.

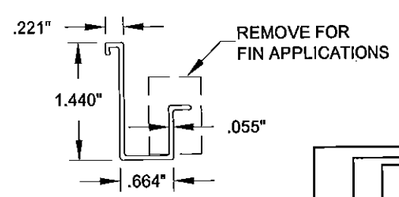

(93) FRAME ASSEMBLY TUBE END CAP, PVC

Approved as complying with the Florida Building Code
Date 9/24/15
NOA# 15-0430.07
Miami Dade Product Control
By

ANTHONY LYNN MILLER
LICENSE
No. 58705
9/14/15
STATE OF FLORIDA
PROFESSIONAL ENGINEER
A. LYNN MILLER, P.E.
P.E.# 58705

PGT®
CERT. OF AUTH. #29296
1070 TECHNOLOGY DRIVE
N. VENICE, FL 34275
(941)-480-1600

Title	VINYL AWNING WINDOW NOA (LM)	Date	9/9/14
Desc.	FRAME ASSEMBLY TUBE DETAILS B	Drawn By	J ROSOWSKI
Rev 1		Rev 1 Date	
Rev 2		Rev 2 Date	

Series	AW-5540	Scale	NTS	Sheet	6 OF 10	DWG No.	MD-5540A.0	Rev. No.	

TABLE 4:

Window Design Pressure (+/-, psf)	Glass Types:	5, 6, 7 & 8
1/8" A CAP, AIRSPACE, 1/8" A, .090" PVB, 1/8" A & 1/8" T CAP, AIRSPACE, 1/8" A, .090" PVB, 1/8" A		
3/16" A CAP, AIRSPACE, 1/8" A, .090" PVB, 1/8" A & 3/16" T CAP, AIRSPACE, 1/8" A, .090" PVB, 1/8" A		

Window Dimensions	Buck Width (in)													
Buck Height (in)	28	30	32	34	36	38	40	42	44	48	50	52.125	54	60
42	+/-50	+/-50	+/-50	+/-50	+/-50	+/-50	+/-50	+/-50	+/-50	+/-50	+/-50	+/-50	+/-50	+/-50
43.776	+/-50	+/-50	+/-50	+/-50	+/-50	+/-50	+/-50	+/-50	+/-50	+/-50	+/-50	+/-50	+/-50	
45.6	+/-50	+/-50	+/-50	+/-50	+/-50	+/-50	+/-50	+/-50	+/-50	+/-50	+/-50	+/-50	+/-50	
47.583	+/-50	+/-50	+/-50	+/-50	+/-50	+/-50	+/-50	+/-50	+/-50	+/-50	+/-50	+/-50		
49.745	+/-50	+/-50	+/-50	+/-50	+/-50	+/-50	+/-50	+/-50	+/-50	+/-50	+/-50			
52.114	+/-50	+/-50	+/-50	+/-50	+/-50	+/-50	+/-50	+/-50	+/-50	+/-50				
54.72	+/-50	+/-50	+/-50	+/-50	+/-50	+/-50	+/-50	+/-50	+/-50					
57.6	+/-50	+/-50	+/-50	+/-50	+/-50	+/-50	+/-50	+/-50						
60.8	+/-50	+/-50	+/-50	+/-50	+/-50	+/-50	+/-50							
64.376	+/-50	+/-50	+/-50	+/-50	+/-50	+/-50								
68.4	+/-50	+/-50	+/-50	+/-50	+/-50									
72.96	+/-50	+/-50	+/-50	+/-50										
78.171	+/-50	+/-50	+/-50											
84	+/-50	+/-50												

MAX. O.C. SPACING IF ANCHORING THROUGH THE FRAME PER SHEETS 3 & 4	MAX. O.C. SPACING IF ANCHORING THROUGH THE INTEGRAL FIN PER SHEET 4
APPLIES TO A ANCHORS ONLY (SEE TABLE 2)	APPLIES TO E ANCHORS ONLY (SEE TABLE 3)
SEE ELEVATION ON SHEET 1	4" FOR E ANCHORS

TABLE 5:

Window Design Pressure (+/-, psf)	Glass Types:	5, 6, 7 & 8
1/8" A CAP, AIRSPACE, 1/8" A, .090" PVB, 1/8" A & 1/8" T CAP, AIRSPACE, 1/8" A, .090" PVB, 1/8" A		
3/16" A CAP, AIRSPACE, 1/8" A, .090" PVB, 1/8" A & 3/16" T CAP, AIRSPACE, 1/8" A, .090" PVB, 1/8" A		

Window Dimensions	Buck Width (in)													
Buck Height (in)	28	30	32	34	36	38	40	42	44	48	50	52.125	54	60
42	+65/-70	+65/-70	+65/-70	+65/-70	+65/-70	+65/-70	+65/-70	+65/-70	+65/-70	+65/-70	+65/-70	+65/-70	+/-50	+/-50
43.776	+65/-70	+65/-70	+65/-70	+65/-70	+65/-70	+65/-70	+65/-70	+65/-70	+65/-70	+65/-70	+65/-70	+/-50	+/-50	
45.6	+65/-70	+65/-70	+65/-70	+65/-70	+65/-70	+65/-70	+65/-70	+65/-70	+65/-70	+65/-70	+/-50	+/-50	+/-50	
47.583	+65/-70	+65/-70	+65/-70	+65/-70	+65/-70	+65/-70	+65/-70	+65/-70	+65/-70	+/-50	+/-50	+/-50		
49.745	+65/-70	+65/-70	+65/-70	+65/-70	+65/-70	+65/-70	+65/-70	+65/-70	+65/-70	+/-50	+/-50			
52.114	+65/-70	+65/-70	+65/-70	+65/-70	+65/-70	+65/-70	+65/-70	+65/-70	+/-50	+/-50				
54.72	+65/-70	+65/-70	+65/-70	+65/-70	+65/-70	+65/-70	+64.2/-69.2	+/-50	+/-50					
57.6	+65/-70	+65/-70	+65/-70	+65/-70	+65/-70	+64/-68.9	+/-50	+/-50						
60.8	+65/-70	+65/-70	+65/-70	+65/-70	+64.3/-69.3	+/-50	+/-50							
64.376	+65/-70	+65/-70	+65/-70	+65/-70	+/-50	+/-50								
68.4	+65/-70	+65/-70	+65/-70	+/-50	+/-50									
72.96	+65/-70	+65/-70	+/-50	+/-50										
78.171	+65/-70	+65/-66.4*	+/-50											
84	+65/-70	+/-63.1*												

MAX. O.C. SPACING IF ANCHORING THROUGH THE FRAME PER SHEETS 3 & 4	MAX. O.C. SPACING IF ANCHORING THROUGH THE INTEGRAL FIN PER SHEET 4
APPLIES TO B, C OR D ANCHORS (SEE TABLE 2)	APPLIES TO F ANCHORS (SEE TABLE 3)
SEE ELEVATION ON SHEET 1	4" FOR F ANCHORS

* IF USING GLASS TYPES 6, 7 OR 8, A DESIGN PRESSURE OF +65/-70 MAY BE USED.

NOTES:

1) BUCK DIMENSIONS SHOWN.

2) FOR SIZES NOT SHOWN, ROUND UP TO THE NEXT AVAILABLE WIDTH OR HEIGHT DIMENSION.

! GLASS TYPES 5, 7, 9, 11, 13 & 15 MAY NOT BE USED IN THE HVHZ ABOVE 30'.

GLAZING NOTES:
"A" = ANNEALED
"H" = HEAT STRENGTHENED
"T" = TEMPERED
"PVB" = .090" BUTACITE® PVB BY KURARAY AMERICA, INC.
"SG" = .090" SENTRYGLAS® INTERLAYER BY KURARAY AMERICA, INC.

1) FOR LAMINATED GLAZING COMPONENTS, SEE TABLE 1, SHEET 2.
2) SEE TYPICAL GLAZING DETAIL ON SHEET 2.

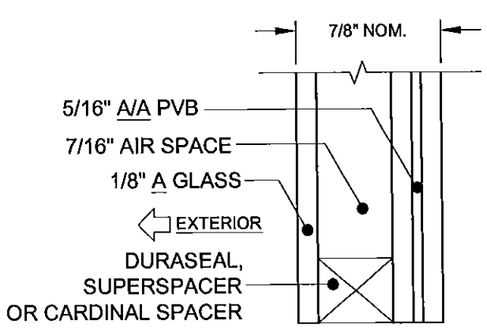

GLASS TYPE 5

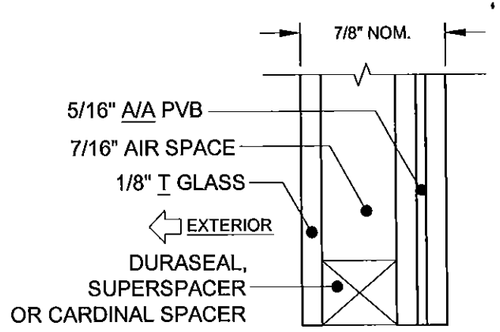

GLASS TYPE 6

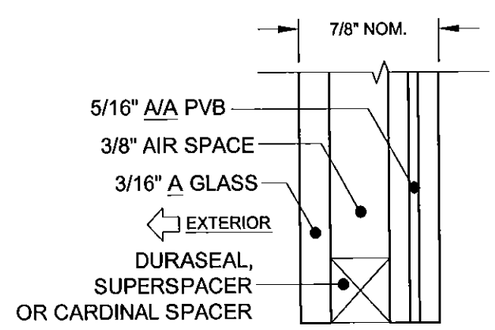

GLASS TYPE 7

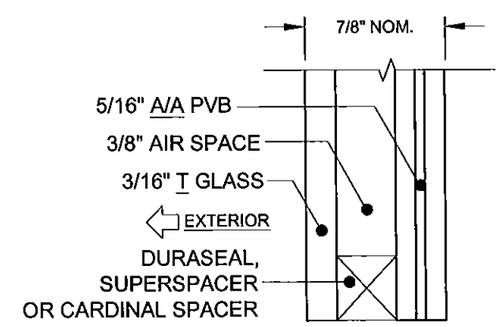

GLASS TYPE 8

Approved as complying with the Florida Building Code
Date 9/24/15
NOA# 15-0430.07
Miami Dade Product Control
By

Rev. 1	
Rev. 2	
Rev. 3	

1070 TECHNOLOGY DRIVE
N. VENICE, FL 34275
(941)-480-1600
CERT. OF AUTH. #29296

Series	Desc.	Sheet	Scale	DWG No.	Rev.
AW-5540	NTS	7 OF 10		MD-5540A.0	

Title: VINYL AWNING WINDOW NOA (LM) — GLAZING DETAILS/DP TABLE 4
Drawn By: J ROSOWSKI
Date: 9/9/14

ANTHONY LYNN MILLER LICENSE No. 58705 STATE OF FLORIDA PROFESSIONAL ENGINEER
9/14/15

A. LYNN MILLER, P.E.
P.E.# 58705

TABLE 6:

Window Design Pressure (+/-, psf)	Glass Types:
1/8" A CAP, AIRSPACE, 1/8" HS, .090" SG, 1/8" HS & 1/8" T CAP, AIRSPACE, 1/8" HS, .090" SG, 1/8" HS	9, 10, 11, 12, 13, 14, 15 & 16
3/16" A CAP, AIRSPACE, 1/8" HS, .090" SG, 1/8" HS & 3/16" T CAP, AIRSPACE, 1/8" HS, .090" SG, 1/8" HS	
1/8" A CAP, AIRSPACE, 3/16" A, .090" SG, 3/16" A & 1/8" T CAP, AIRSPACE, 3/16" A, .090" SG, 3/16" A	
3/16" A CAP, AIRSPACE, 3/16" A, .090" SG, 3/16" A & 3/16" T CAP, AIRSPACE, 3/16" A, .090" SG, 3/16" A	

Window Dimensions		Buck Width (in)										
		28	30	32	34	36	38	40	42	44	47	60
Buck Height (in)	42	+70/-110	+70/-110	+70/-110	+70/-110	+70/-110	+70/-110	+70/-110	+70/-110	+70/-110	+70/-110	+70/-110
	64.34	+70/-110	+70/-110	+70/-110	+70/-110	+70/-110	+70/-110	+70/-110	+70/-110	+70/-110	+70/-110	
	68.727	+70/-110	+70/-110	+70/-110	+70/-110	+70/-110	+70/-110	+70/-110	+70/-110	+70/-110		Widths over 47" require around-the-corner hardware
	72	+70/-110	+70/-110	+70/-110	+70/-110	+70/-110	+70/-110	+70/-110	+70/-110			
	75.6	+70/-110	+70/-110	+70/-110	+70/-110	+70/-110	+70/-110	+70/-110				
	79.578	+70/-110	+70/-110	+70/-110	+70/-110	+70/-110	+70/-110					
	84	+70/-110	+70/-110	+70/-110	+70/-110	+70/-110						

MAX. O.C. SPACING IF ANCHORING THROUGH THE FRAME PER SHEETS 3 & 4
APPLIES TO B, C OR D ANCHORS (SEE TABLE 2)
SEE ELEVATION ON SHEET 1

GLAZING NOTES:
"A" = ANNEALED
"H" = HEAT STRENGTHENED
"T" = TEMPERED
"PVB" = .090" BUTACITE® PVB BY KURARAY AMERICA, INC.
"SG" = .090" SENTRYGLAS® INTERLAYER BY KURARAY AMERICA, INC.

1) FOR LAMINATED GLAZING COMPONENTS, SEE TABLE 1, SHEET 2.
2) SEE TYPICAL GLAZING DETAIL ON SHEET 2.

NOTES:

1) BUCK DIMENSIONS SHOWN.

2) FOR SIZES NOT SHOWN, ROUND UP TO THE NEXT AVAILABLE WIDTH OR HEIGHT DIMENSION.

! GLASS TYPES 9 THROUGH 16 MAY NOT BE USED WITH J-CHANNEL OR INTEGRAL FIN FRAMES

! GLASS TYPES 5, 7, 9, 11, 13 & 15 MAY NOT BE USED IN THE HVHZ ABOVE 30'.

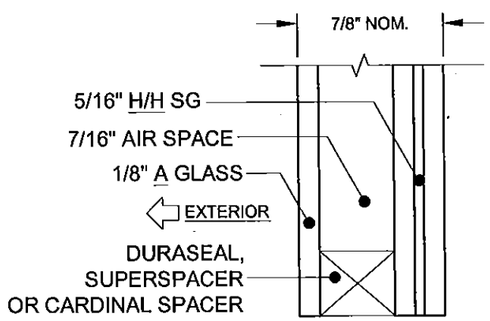

GLASS TYPE 9

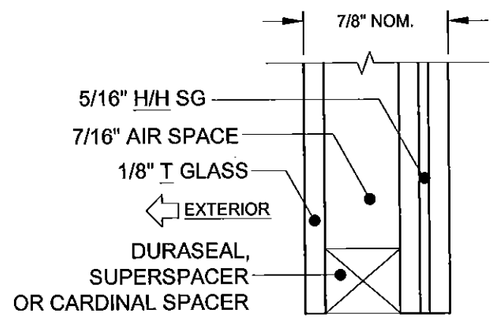

GLASS TYPE 10

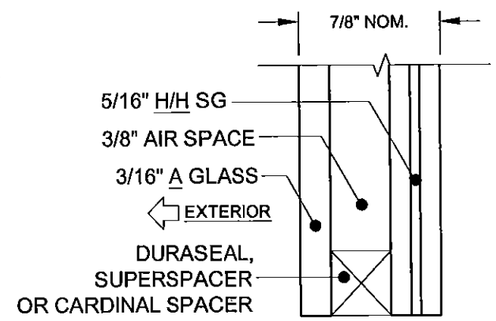

GLASS TYPE 11

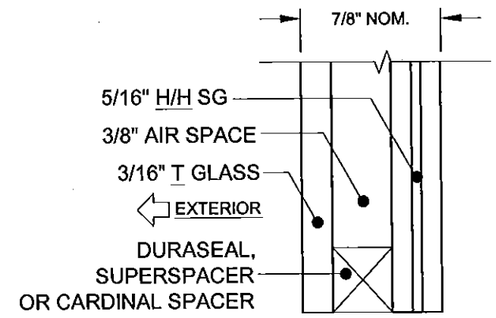

GLASS TYPE 12

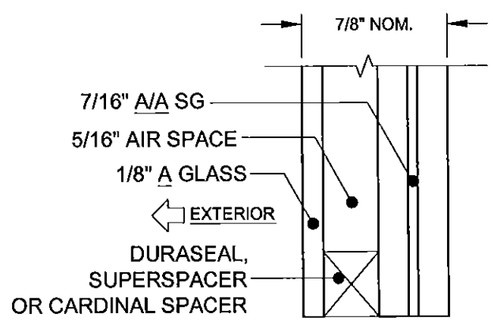

GLASS TYPE 13

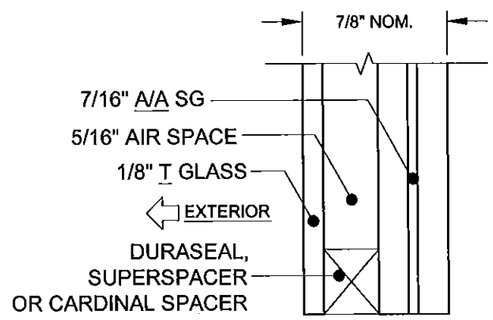

GLASS TYPE 14

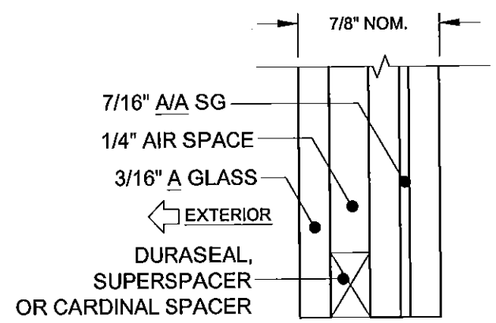

GLASS TYPE 15

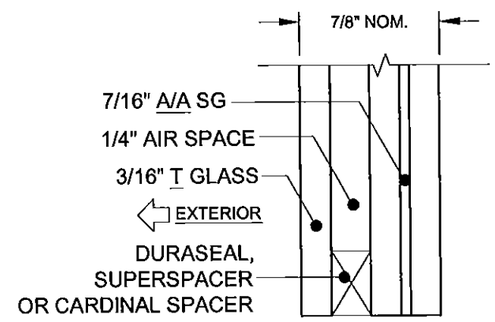

GLASS TYPE 16

Approved as complying with the Florida Building Code
Date 9/24/15
NOA# 15-0430.07
Miami Dade Product Control
By Shaq J. Chandler

Rev.	
Rev 1	
Rev 2	
Rev 3	

1070 TECHNOLOGY DRIVE
N. VENICE, FL 34275
(941)-480-1600
CERT. OF AUTH. #29296

Series	Desc.	Title	Scale	Sheet	DWG No.	Drawn By	Date	Rev.
AW-5540	GLAZING DETAILS/DP TABLE 5	VINYL AWNING WINDOW NOA (LM)	NTS	8 OF 10	MD-5540A.0	J ROSOWSKI	9/9/14	

ANTHONY LYNN MILLER
LICENSE
No. 58705
STATE OF FLORIDA
PROFESSIONAL ENGINEER
9/14/15

A. LYNN MILLER, P.E.
P.E.# 58705

Frame Height	Qty. Lock Points
< 26.499"	1
26.500"-35.999"	2
36.500"-73.999"	3
74.000"-84.000"	4

Frame Width	Qty. Snubbers
< 30.000"	2
30.001"-48.000"	3
48.001"-60.000"	4

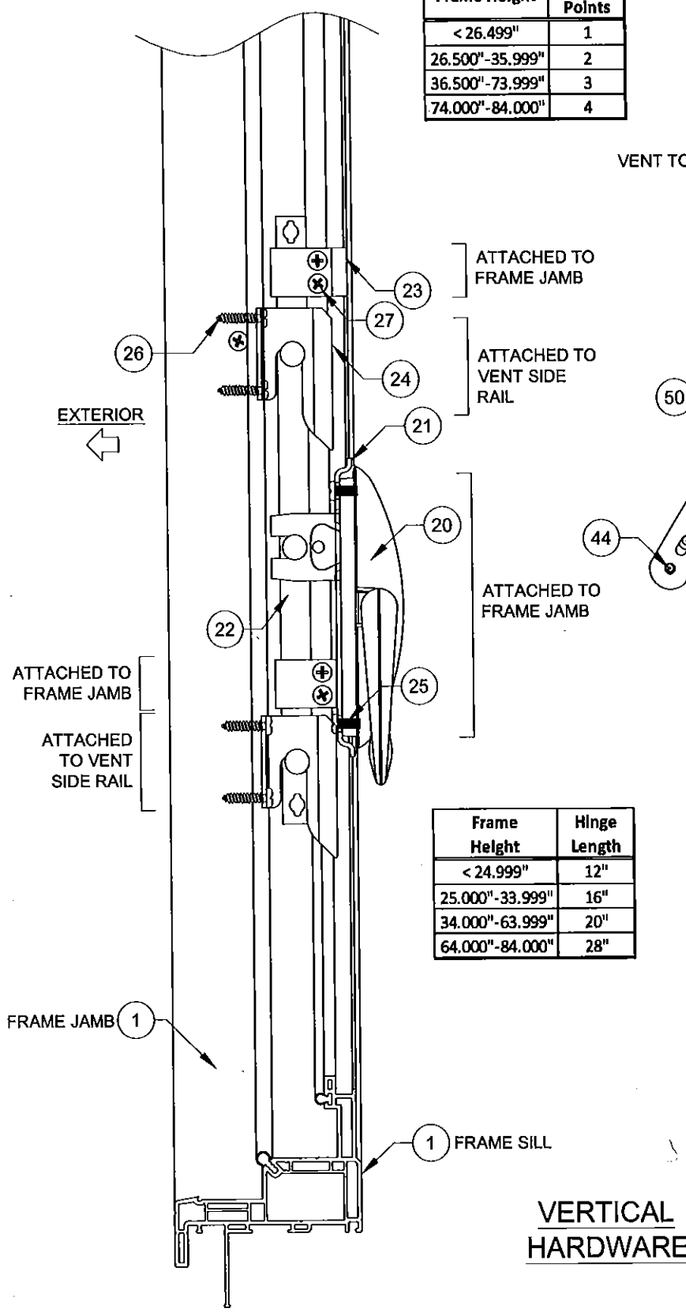

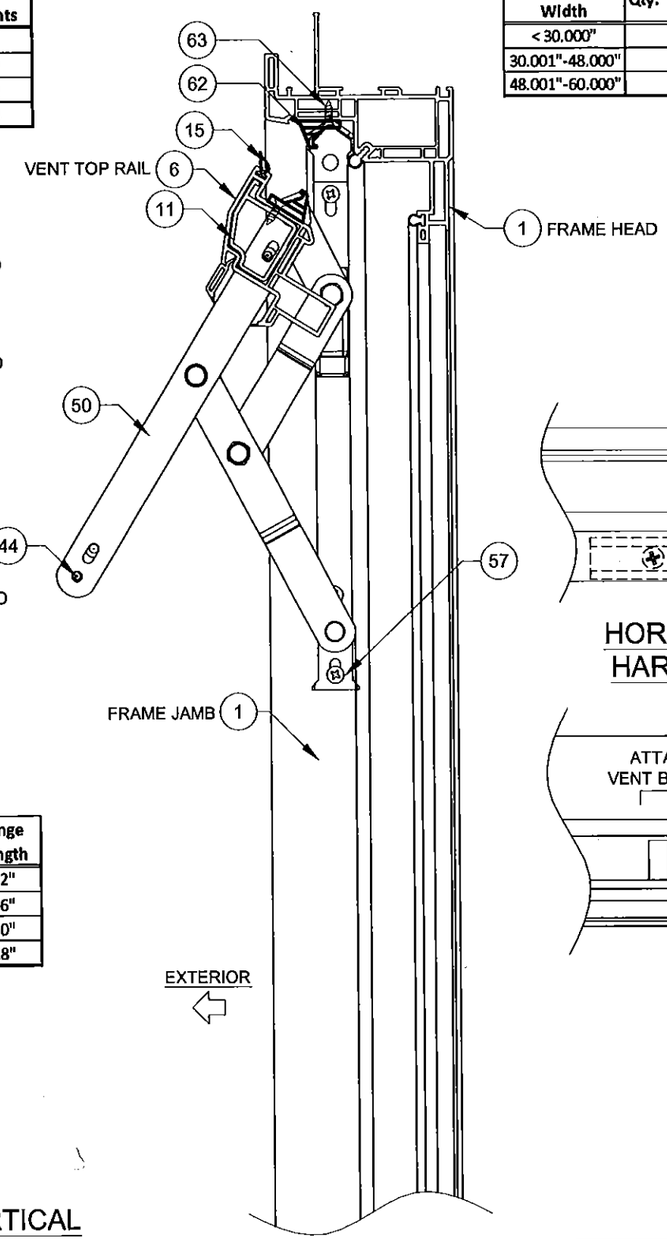

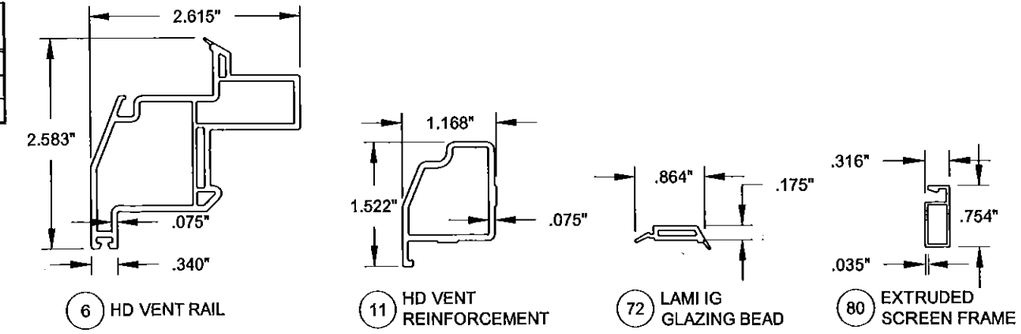

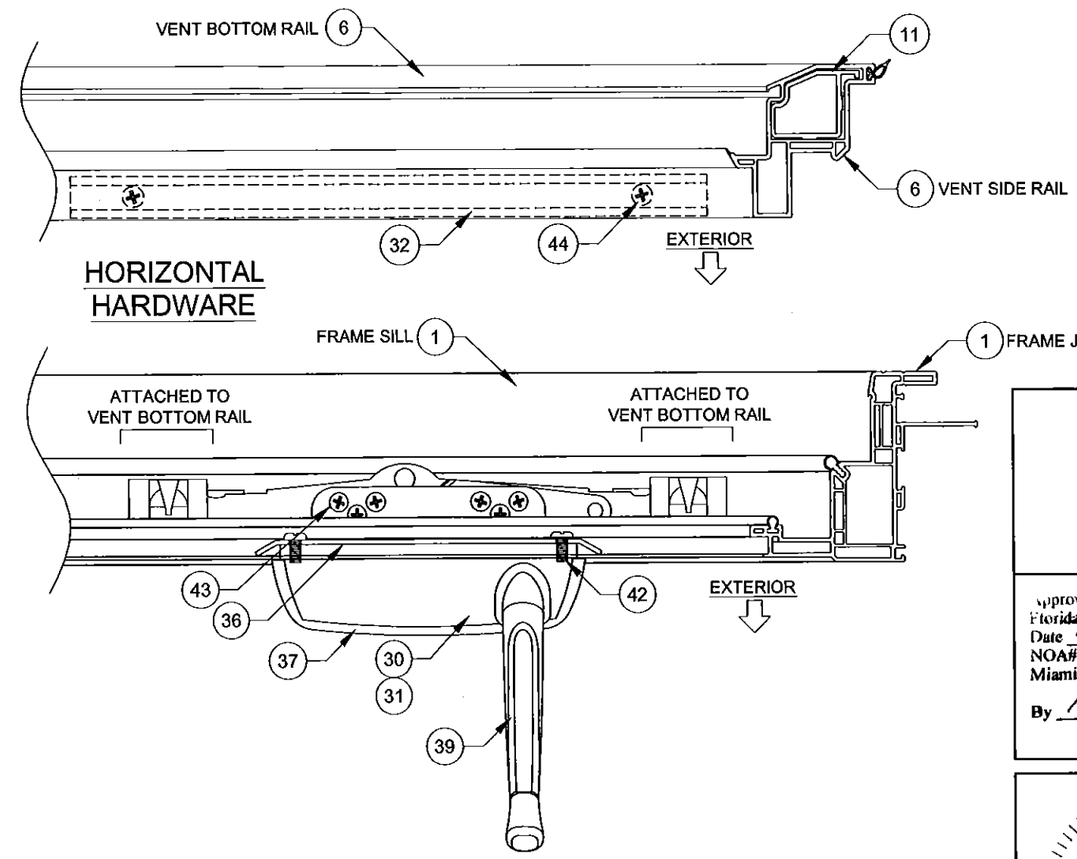

HORIZONTAL HARDWARE

VERTICAL HARDWARE

Frame Height	Hinge Length
< 24.999"	12"
25.000"-33.999"	16"
34.000"-63.999"	20"
64.000"-84.000"	28"

NOTES:

1) NOT ALL OPTIONS ARE SHOWN.

Approved as complying with the Florida Building Code
Date 9/24/15
NOA# 15-0430.07
Miami Dade Product Control
By

ANTHONY LYNN MILLER
LICENSE
No. 58705
9/14/15
STATE OF FLORIDA
PROFESSIONAL ENGINEER

A. LYNN MILLER, P.E.
P.E.# 58705

PGT®
CERT. OF AUTH. #29296
1070 TECHNOLOGY DRIVE
N. VENICE, FL 34275
(941)-480-1600

Title	VINYL AWNING WINDOW NOA (LM)	Date	9/9/14
Desc.	BOM & ASSEMBLY A	Drawn By	J ROSOWSKI
Rev 1		Rev 1 Date	
Rev 2		Rev 2 Date	
Series	AW-5540	Scale	NTS
Sheet	9 OF 10	DWG No.	MD-5540A.0
Rev. No.			

TABLE 6:

#	Part #	Description	Material
1	620125	J-channel Frame	PVC
2	620126	Flange Frame	PVC
3	620127	Integral Fin Frame	PVC
4	620128	Equal Leg/Box Frame	PVC
6	620173	HD Vent Rail	PVC
11	620164	HD Vent Reinforcement (Full Length)	Alum. 6005-T5
15	6TP247	Weatherstrip, 65 +/- 1 duro.	Flex PVC
20	7024	Multi-Point Lock	C Steel
21	7011	Multi-Point Lock Flat Support Plate	C Steel
22	varies with size	Tie Bar	C Steel
23	20222	Tie Bar Guide	C Steel
24	7014	Multi-Lock Keeper	C Steel
25	71024X0562PPFX	#10-24 x 9/16" Phl. PH Machine Screw	SS
26	78X34PPTX410	#8 x 3/4" Phl. PH Tek	SS
27	78X112PSAX	#8 x 1-1/2" Phl. FH Tek	SS
30	20239	Awning Scissor Operator	C Steel
31	20240	Awning Narrow operator	C Steel
32	7MC7034	Awning Scissor Operator Track	SS
33	20257	Awning Narrow Operator Bracket	C Steel
35	7030	Operator Gasket White	Neoprene
36	7031	Operator Backing Plate	C Steel
37	20253	Operator Cover	
39		Standard Handle	C Steel
40	7018	Folding Handle	C Steel
41	7019	T-Handle (Thumbturn)	C Steel
42	78X12PPMSX	#8-32 x 1/2" Phl. PH Machine Screw	SS
43	78S34PFAX	#8 x 3/4" Phl. FH	SS
44	78X1PSDX	#8 x 1" Phl. FH Tek	SS
50	7032HD/16/20/28	Awning 4-Bar Hinge	C Steel
57	710X12PPMSX	#10 x 1/2" Phl. PH Machine Screw	SS
62	720256	HD Snubber	Die-cast Zinc
63	78X12PPSMSX	#8 x 1/2" Phl. PH	SS
64	20187	Anchor Hole Plug	PVC
65	720309	Around the Corner Hardware Package	Steel
72	720135	Lami IG Glazing Bead	PVC
74		Backbedding, GE 7700 or Dow 791	Silicone
75		Quanex SuperSpacer nXT with Hot Melt Butyl	Composite
76		Quanex Duraseal Spacer	Composite
77		Cardinal XL Edge Spacer	Composite
78	71646N	Setting Block (7/8" x 1" x 1/8"), 85 +/- 5 duro.	EPDM
80	67006	Extruded Screen Frame	
84	47040	Screen Corner Key	
85	7CASPM	Tension Spring	
86	61816C34	Screen Cloth	
87	61635/24	.140" Screen Spline (Machine/Hand Rolled)	
90	620160A	Frame Assembly Tube	Alum. 6005-T5
91	620177	Shallow, Flush Cap	PVC
92	620178	Deep, Flush Cap	PVC

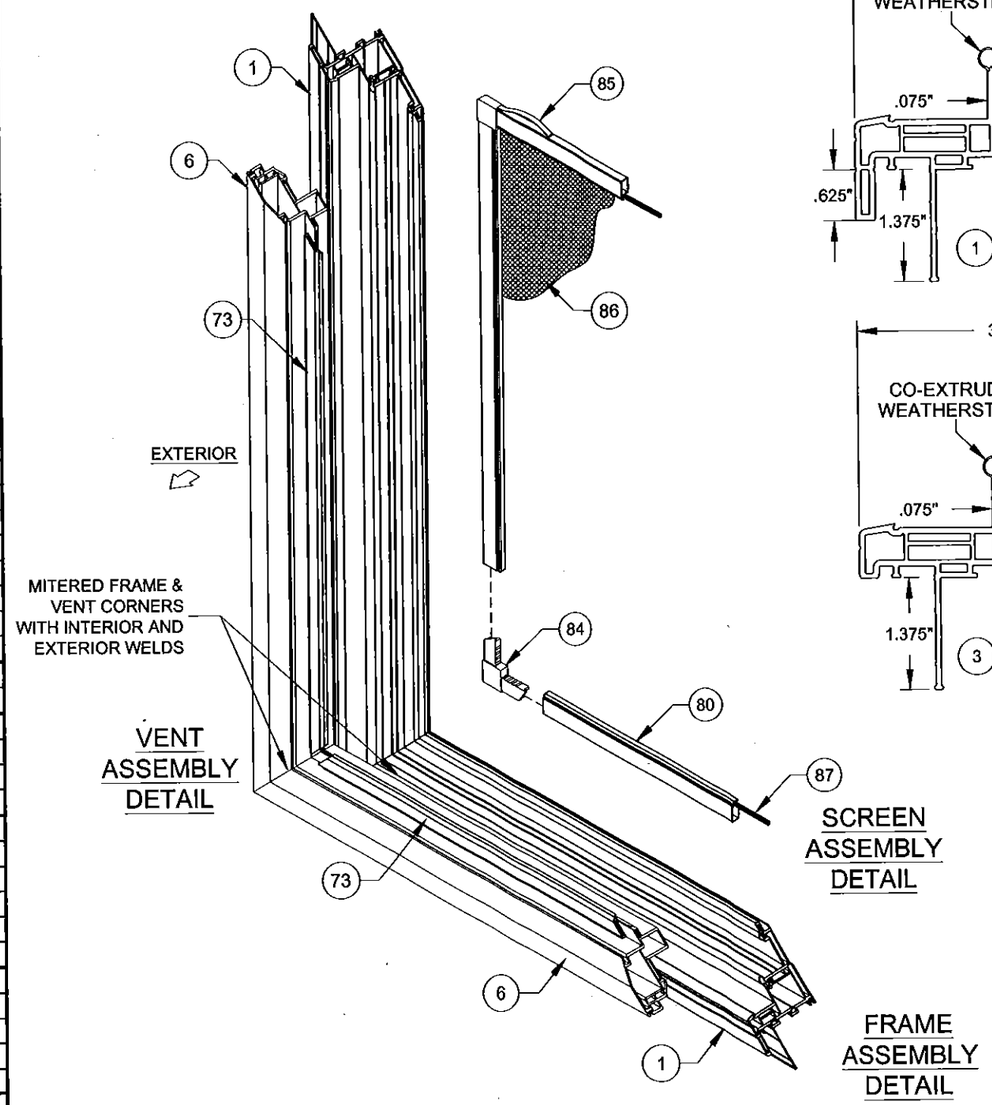

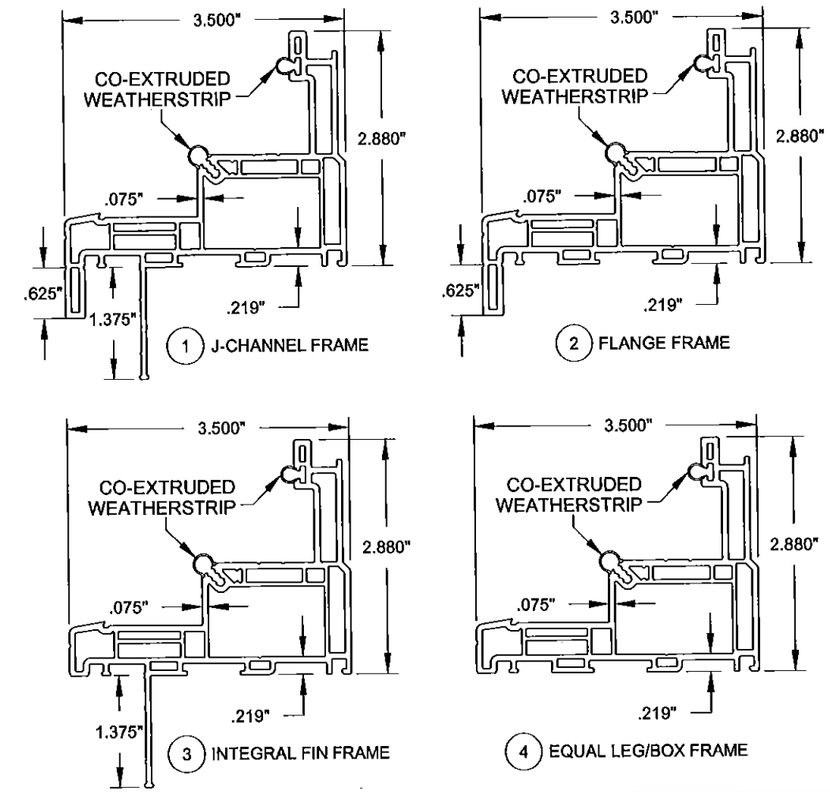

FRAME OPTIONS

Approved as complying with the Florida Building Code
Date SEP 24, 2015
NOA# 15-0430.07
Miami Dade Product Control
By Shaq L. Chanda

NOTES:
1) SOME PARTS NOT SHOWN ON DRAWING FOR CLARITY.
2) J-CHANNEL FRAME SHOWN, PART #1. OTHER FRAME TYPES, PARTS #2 - 4, APPLY.
3) ITEMS # 5, 7-10, 12-14, 16-19, 28, 29, 34, 38, 45-49, 51-56, 58-61, 66-71, 73, 79, 81-83, 88 & 89 ARE NOT USED AND ARE NOT PART OF THIS APPROVAL.
4) ROYAL PVC TO BE LABELED FOR AAMA EXTRUDER CODE.

PGT®
CERT. OF AUTH. #29296
1070 TECHNOLOGY DRIVE
N. VENICE, FL 34275
(941)-480-1600

Title	VINYL AWNING WINDOW NOA (LM)			Date	9/9/14
Desc.	BOM & ASSEMBLY B			Drawn By	J ROSOWSKI
Rev 1				Rev 1 Date	
Rev 2				Rev 2 Date	
Series	AW-5540	Scale NTS	Sheet 10 OF 10	DWG No. MD-5540A.0	Rev. No.

ANTHONY LYNN MILLER
LICENSE
No. 58705
9/14/15
STATE OF FLORIDA
PROFESSIONAL ENGINEER
A. LYNN MILLER, P.E.
P.E.# 58705