MIAMI-DADE COUNTY
DEPARTMENT OF REGULATORY AND ECONOMIC RESOURCES (RER)
BOARD AND CODE ADMINISTRATION DIVISION

MIAMI-DADE COUNTY
PRODUCT CONTROL SECTION
11805 SW 26 Street, Room 208
T (786) 315-2590 F (786) 315-2599
www.miamidade.gov/economy

NOTICE OF ACCEPTANCE (NOA)

Lawson Industries, Inc.
8501 NW 90 Street
Medley, FL 33166

SCOPE:

This NOA is being issued under the applicable rules and regulations governing the use of construction materials. The documentation submitted has been reviewed and accepted by Miami-Dade County RER-Product Control Section to be used in Miami-Dade County and other areas where allowed by the Authority Having Jurisdiction (AHJ).

This NOA shall not be valid after the expiration date stated below. The Miami-Dade County Product Control Section (In Miami-Dade County) and/ or the AHJ (in areas other than Miami-Dade County) reserve the right to have this product or material tested for quality assurance purposes. If this product or material fails to perform in the accepted manner, the manufacturer will incur the expense of such testing and the AHJ may immediately revoke, modify, or suspend the use of such product or material within their jurisdiction. RER reserves the right to revoke this acceptance, if it is determined by Miami-Dade County Product Control Section that this product or material fails to meet the requirements of the applicable building code.

This product is approved as described herein, and has been designed to comply with the Florida Building Code, including the High Velocity Hurricane Zone.

DESCRIPTION: Series "SH-7500 Flange Frame" Aluminum Single Hung Window – N.I.

APPROVAL DOCUMENT: Drawing No. **L7500-0401**, titled "SH-7500 Single Hung Flange Window", sheets 1 through 5 of 5, dated 09/20/04, with revision **F** dated 08/04/14, prepared by the manufacturer, signed and sealed by Thomas J. Sotos, P.E., bearing the Miami-Dade County Product Control Section Renewal stamp with the Notice of Acceptance number and expiration date by the Miami-Dade County Product Control Section.

MISSILE IMPACT RATING: None.

LABELING: Each unit shall bear a permanent label with the manufacturer's name or logo, city, state, model/ series, and following statement: "Miami-Dade County Product Control Approved", unless otherwise noted herein.

RENEWAL of this NOA shall be considered after a renewal application has been filed and there has been no change in the applicable building code negatively affecting the performance of this product.

TERMINATION of this NOA will occur after the expiration date or if there has been a revision or change in the materials, use, and/ or manufacture of the product or process. Misuse of this NOA as an endorsement of any product, for sales, advertising or any other purposes shall automatically terminate this NOA. Failure to comply with any section of this NOA shall be cause for termination and removal of NOA.

ADVERTISEMENT: The NOA number preceded by the words Miami-Dade County, Florida, and followed by the expiration date may be displayed in advertising literature. If any portion of the NOA is displayed, then it shall be done in its entirety.

INSPECTION: A copy of this entire NOA shall be provided to the user by the manufacturer or its distributors and shall be available for inspection at the job site at the request of the Building Official.

This NOA **renews NOA No. 14-0908.12** and consists of this page 1 and evidence pages E-1 and E-2, as well as approval document mentioned above.

The submitted documentation was reviewed by **Manuel Perez, P.E.**

MIAMI-DADE COUNTY APPROVED

7/30/15

NOTICE OF ACCEPTANCE: EVIDENCE SUBMITTED

A. DRAWINGS

1. Manufacturer's die drawings and sections.
   (Submitted under NOA's No. 05-0324.07 and 07-0925.11)
2. Drawing No. **L7500-0401**, titled "SH-7500 Single Hung Flange Window", sheets 1 through 5 of 5, dated 09/20/04, with revision **F** dated 08/04/14, prepared by manufacturer, signed and sealed by Thomas J. Sotos, P.E.

B. TESTS

1. Test reports on: 1) Uniform Static Air Pressure Test, Loading per FBC, TAS 202-94
   2) Forced Entry Test, per FBC 2411.3.2.1, and TAS 202-94
   along with marked-up drawings and installation diagram of aluminum single hung windows - (Fin/Flange mounted), prepared by Fenestration Testing Laboratories, Inc., Test Report No. **FTL-5283,** dated 08/24/07, signed and sealed by Carlos S. Rionda, P.E.
   (Submitted under NOA No.07-0925.11)
2. Test reports on: 1) Air Infiltration Test, per FBC, TAS 202-94
   2) Uniform Static Air Pressure Test, Loading per FBC, TAS 202-94
   3) Water Resistance Test, per FBC, TAS 202-94
   4) Large Missile Impact Test per FBC, TAS 201-94
   5) Cyclic Wind Pressure Loading per FBC, TAS 203-94
   6) Forced Entry Test, per FBC 2411.3.2.1, and TAS 202-94
   along with marked-up drawings and installation diagram of aluminum single hung windows (flange-mounted), prepared by Fenestration Testing Laboratory, Inc., Test Reports No. **FTL-4324, FTL-4350, FTL-4346, FTL-4363, FTL-4323** and **FTL-4406**, all dated 11/08/04 and **FTL-4405**, dated 11/12/04, signed and sealed by Edmundo J. Largaespada, P.E.
   (Submitted under NOA No.05-0324.07)

C. CALCULATIONS

1. Anchor verification calculations and structural analysis, complying with FBC, prepared by manufacturer, dated 08/03/09, signed and sealed by Thomas J. Sotos, P.E.
   (Submitted under NOA No. 09-0720.06)
2. Glazing complies with **ASTM E1300-04/09**

Manuel Perez, P.E.
Product Control Examiner
NOA No. 15-0511.05
Expiration Date: September 01, 2020
Approval Date: August 06, 2015

NOTICE OF ACCEPTANCE: EVIDENCE SUBMITTED

D. QUALITY ASSURANCE

1. Miami-Dade Department of Regulatory and Economic Resources (RER).

E. MATERIAL CERTIFICATIONS

1. None.

F. STATEMENTS

1. Statement letter of conformance, complying with **FBC 5th Edition (2014)**, dated May 6, 2015, issued by manufacturer, signed and sealed by Thomas J. Sotos, P.E.
2. Statement letter of no financial interest, dated 07/07/09, signed and sealed by Thomas J. Sotos, P.E.
   (Submitted under NOA No. 10-0412.02)
3. Laboratory compliance letter for Test Report No. **FTL–5283**, issued by Fenestration Testing Laboratory, Inc., dated 09/11/07, signed and sealed by Carlos S. Rionda, P. E.
   (Submitted under NOA No. 07-0925.11)
4. Laboratory compliance letter for Test Reports No. **FTL-4324, FTL-4350, FTL-4346, FTL-4363, FTL-4323, FTL-4406**, all dated 11/08/04 and **FTL-4405** dated 11/12/04, all issued by Fenestration Testing Laboratory, Inc., signed and sealed by Edmundo J. Largaespada, P.E.
   (Submitted under NOA No.05-0324.07)

G. OTHERS

1. Notice of Acceptance No. **14-0908.12**, issued to Lawson Industries, Inc. for their Series "SH-7500 (Flange Frame) Aluminum Single Hung Window - N.I.", approved on 11/13/14 and expiring on 09/01/15.

Manuel Perez, P.E.
Product Control Examiner
NOA No. 15-0511.05
Expiration Date: September 01, 2020
Approval Date: August 06, 2015

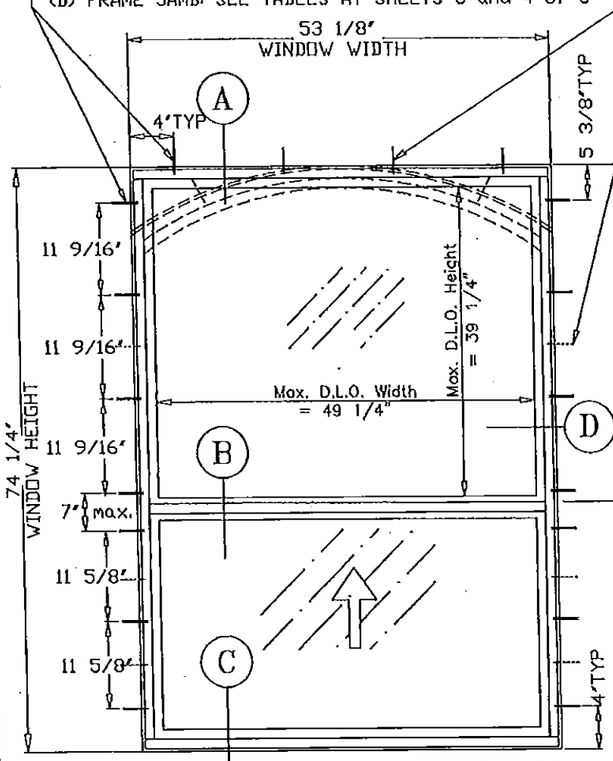

UNEQUAL LITE VIEW WINDOW
TEST UNIT ELEVATION
(SEE TABLE V-1 & V-2 FOR DESIGN PRESSURE)

OPTIONAL FASTENERS NOTE:
1/4" TAPCON FASTENERS or #12 S.M.S. SCREWS MAY BE USED, SEE DP CHARTS FOR TOTAL ANCHORS REQUIRED.
(ADDITIONAL ANCHORS TO BE FIELD DRILLED & APPLIED)
(A) 3 AT FRAME HEAD
(C) NONE AT FRAME SILL
(D) FRAME JAMB: SEE TABLES AT SHEETS 3 and 4 of 5

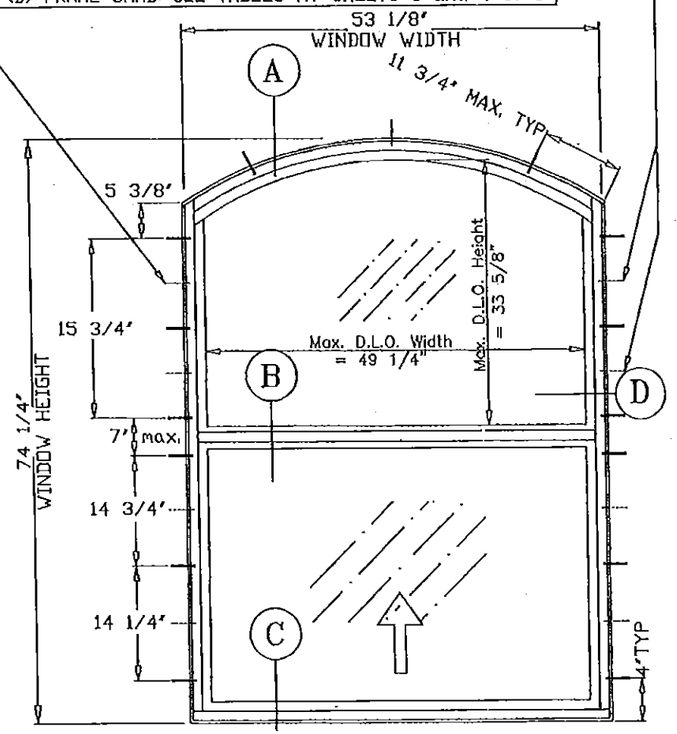

RADIUS HEAD EQUAL LITE WINDOW
TEST UNIT ELEVATION

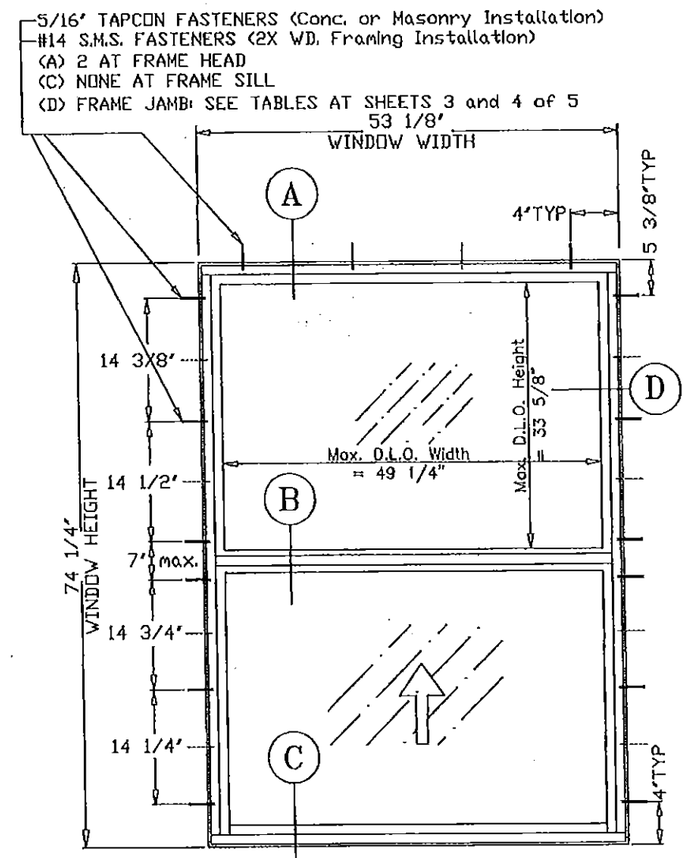

EQUAL LITE WINDOW
TEST UNIT ELEVATION

SERIES-7500 SINGLE HUNG WINDOW - FLANGE FRAME - NON-IMPACT

Notes:

1.) THIS WINDOW SYSTEM IS DESIGNED AND TESTED TO COMPLY WITH THE REQUIREMENTS OF THE 2014 FLORIDA BUILDING CODE AND ASTM 1300.
THIS PRODUCT IS NOT IMPACT RESISTANT. WINDOWS ARE TO BE PROTECTED WITH MIAMI-DADE COUNTY APPROVED IMPACT RESISTANT SHUTTERS.
2.) 1 X OR 2 X WOOD BUCKS SHALL BE INSTALLED AND ANCHORED SO THAT THE BUILDING RESISTS THE SUPERIMPOSED LOADS IN ACCORDANCE WITH REQUIREMENTS OF 2014 F.B.C. & TO BE REVIEWED BY THE BUILDING OFFICIAL.
3.) ANCHORS SHOWN ABOVE ARE AS PER TEST UNITS. INTERIOR ANCHOR SPACINGS WILL VARY WITH UNIT DIMENSIONS, AND THE NUMBER OF ANCHORS REQUIRED, AS SPECIFIED ON THE LOAD TABLES.
4.) ANCHOR CONDITIONS NOT DESCRIBED IN THESE DRAWING'S ARE TO BE ENGINEERED ON A SITE SPECIFIC BASIS, UNDER SEPARATE APPROVAL AND TO BE REVIEWED BY BUILDING OFFICIAL.
5.) RADIUS HEAD WINDOWS ARE QUALIFIED FOR USE WITH ALL GLASS TYPES TABULATED HEREIN.
6.) VIEW WINDOWS ARE QUALIFIED FOR USE WITH 3/16" ANNEALED & 3/16" TEMPERED GLASS USING THE HEAVY DUTY MEETING RAIL ONLY.
7.) SEE PAGE 4 FOR LOCK OPTIONS.
8.) APPROVAL APPLIES TO SINGLE UNITS OR MULTIPLE UNITS AND MAY BE MULLED VERTICALLY OR HORIZONTALLY.
9.) MULLING SINGLE HUNG WINDOWS WITH OTHER TYPES OF MIAMI-DADE COUNTY APPROVED WINDOWS USING A MIAMI-DADE COUNTY APPROVED MULLION IN BETWEEN ARE ACCEPTABLE BUT THE LOWER DESIGN PRESSURE FROM THE WINDOWS OR MULLION APPROVAL WILL APPLY TO THE ENTIRE MULLED SYSTEM.
10.) SEE SHEET # 4 FOR MULLION/METAL ATTACHMENT DETAILS & NOTES.

WINDOWS ARE TO BE PROTECTED WITH MIAMI-DADE COUNTY APPROVED IMPACT RESISTANT SHUTTERS

PRODUCT RENEWED
as complying with the Florida
Building Code
Acceptance No. 15-0511.05
Expiration Date Sept. 1, 2020
By Manuel Perez
Miami-Dade Product Control

PRODUCT REVISED
as complying with the Florida
Building Code
Acceptance No 14-0908.12
Expiration Date 09/01/2015
By
Miami Dade Product Control

LAWSON INDUSTRIES, INC.
8501 N.W. 90 ST.
MEDLEY, FLORIDA 33166
PH No. (305) 696-8660
MANUFACTURER OF QUALITY ALUMINUM WINDOWS AND GLASS DOORS

SH-7500 SINGLE HUNG FLANGE WINDOW
APPROVED ELEVATIONS, CONFIGURATIONS AND NOTES

Revision #:
Sheet: 1 OF 5
Product Reference Number:
Drawing Number: L7500-0401

Revision Notes:
B. Revised glass charts w/ meeting rail types Added Chart w/ 1/8" Tempered Glass
C. Qualified Cam Lock on all windows
D. General notes revised to comply with the 2007 Florida Building Code.
E. Revised to Comply w/ 2010 FBC
F. Revised to Comply w/ 2014 FBC

Drawn By: N. ERAZO — Date Drawn: 09/20/04
Checked By: N. ERAZO — Date Revised: 08/04/14
Revision Level: F — Scale:

THOMAS J. SOTOS
PROFESSIONAL ENGINEER
FL LIC. # 55225

THOMAS J. SOTOS LICENSED No 55225 STATE OF FLORIDA PROFESSIONAL ENGINEER

DATE

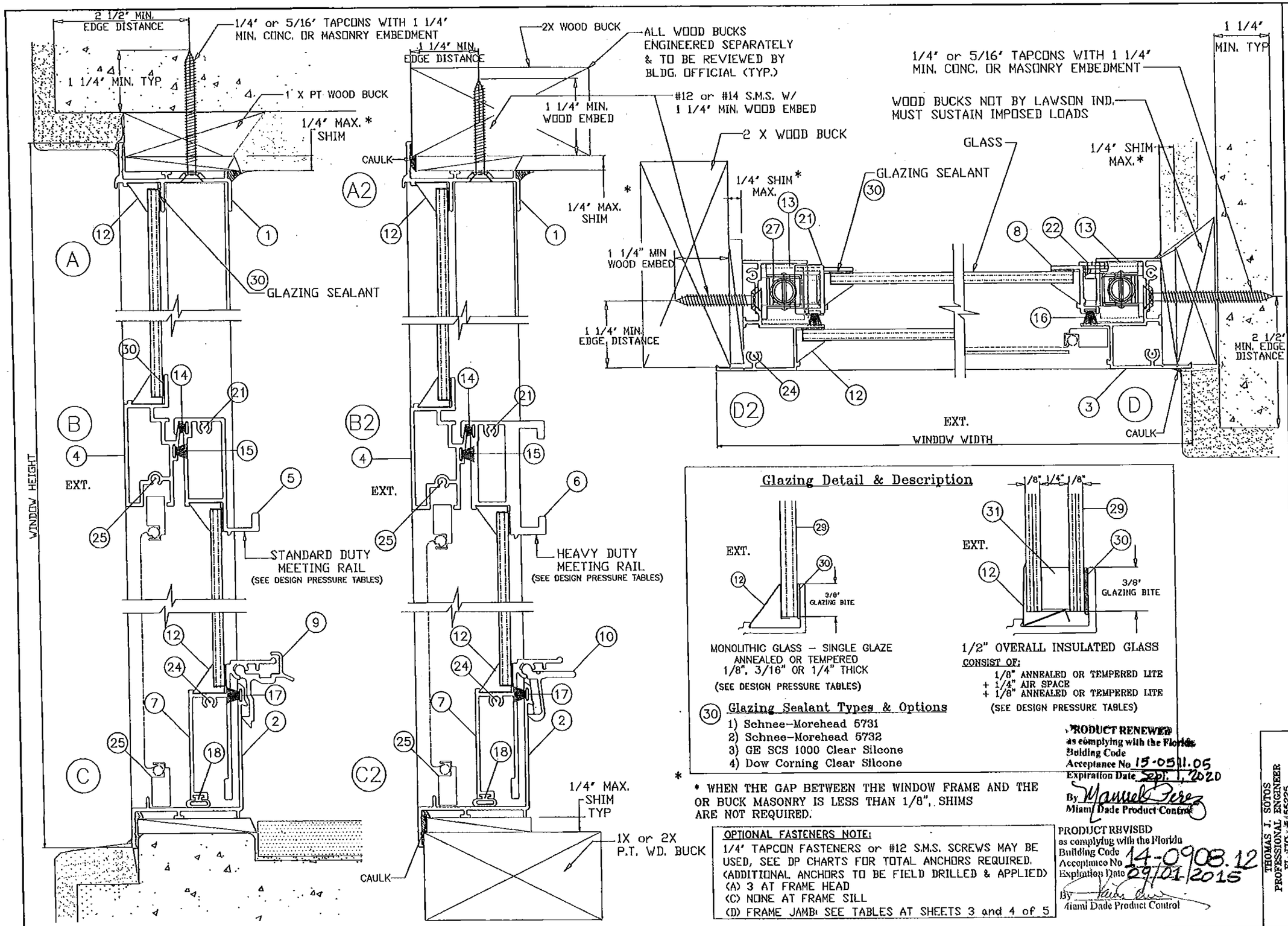

Glazing Detail & Description

MONOLITHIC GLASS – SINGLE GLAZE
ANNEALED OR TEMPERED
1/8", 3/16" OR 1/4" THICK
(SEE DESIGN PRESSURE TABLES)

1/2" OVERALL INSULATED GLASS
CONSIST OF:
1/8" ANNEALED OR TEMPERED LITE
+ 1/4" AIR SPACE
+ 1/8" ANNEALED OR TEMPERED LITE
(SEE DESIGN PRESSURE TABLES)

(30) Glazing Sealant Types & Options
1) Schnee–Morehead 5731
2) Schnee–Morehead 5732
3) GE SCS 1000 Clear Silcone
4) Dow Corning Clear Silcone

* WHEN THE GAP BETWEEN THE WINDOW FRAME AND THE OR BUCK MASONRY IS LESS THAN 1/8", SHIMS ARE NOT REQUIRED.

OPTIONAL FASTENERS NOTE:
1/4" TAPCON FASTENERS or #12 S.M.S. SCREWS MAY BE USED, SEE DP CHARTS FOR TOTAL ANCHORS REQUIRED.
(ADDITIONAL ANCHORS TO BE FIELD DRILLED & APPLIED)
(A) 3 AT FRAME HEAD
(C) NONE AT FRAME SILL
(D) FRAME JAMB: SEE TABLES AT SHEETS 3 and 4 of 5

PRODUCT RENEWED
as complying with the Florida Building Code
Acceptance No 15-0511.05
Expiration Date Sept. 1, 2020
By Manuel Perez
Miami Dade Product Control

PRODUCT REVISED
as complying with the Florida Building Code
Acceptance No 14-0908.12
Expiration Date 09/01/2015
By
Miami Dade Product Control

THOMAS J. SOTOS
PROFESSIONAL ENGINEER
FL. LIC. #55225

DATE

Revision Notes:
B. Revised glass charts w/ meeting rail types Added Chart w/ 1/8" Tempered Glass
C. Qualified Cam Lock on all windows
D. General notes revised to comply with the 2007 Florida Building Code.
E. Revised to Comply w/ 2010 FBC
F. Revised to Comply w/ 2014 FBC

Drawn By: N. ERAZO
Date Drawn: 09/20/04
Checked By: N. ERAZO
Date Revised: 08/04/14
Revision Level: F
Scale:

Product Reference Numbers:
Drawing Numbers: L7500-0401
Sheet: 2 OF 5
Revision #:

LAWSON INDUSTRIES, INC.
MANUFACTURER OF QUALITY ALUMINUM WINDOWS AND GLASS DOORS
8501 N.W. 90 ST.
MEDLEY, FLORIDA 33166
PH No. (305) 696-8660

SH-7500 SINGLE HUNG FLANGE WINDOW
CROSS SECTIONAL DETAILS FOR STD/HVY DUTY MEETING RAIL

Flange Frame w/ Standard Meeting Rail
Test # FTL 4505 - 3/16" Annealed
Negative Pressure Limited to 100psf.

Width (in)	Height (in)	P(+) psf	P(-) psf	#14 or 5/16" Tapcons Jamb Anchors	#14 or 5/16" Tapcons Head Anchors	#12 or 1/4" Tapcons Jamb Anchors	#12 or 1/4" Tapcons Head Anchors
19.125	26	70.0	100.0	2	2	2	2
26.5	26	70.0	100.0	2	2	2	2
37	26	70.0	100.0	2	2	4	3
53.125	26	70.0	100.0	3	2	5	3
19.125	38.375	70.0	100.0	3	2	3	2
26.5	38.375	70.0	100.0	2	2	4	2
37	38.375	70.0	100.0	3	2	5	3
53.125	38.375	70.0	76.8	4	2	6	3
19.125	50.625	70.0	100.0	2	2	3	2
26.5	50.625	70.0	100.0	3	2	5	2
37	50.625	70.0	100.0	4	2	7	3
53.125	50.625	62.6	62.6	4	2	6	3
19.125	58	70.0	100.0	3	2	4	2
26.5	58	70.0	100.0	3	2	6	2
37	58	70.0	98.3	5	2	8	3
53.125	58	57.3	57.3	4	2	7	3
19.125	63	70.0	100.0	3	2	4	2
26.5	63	70.0	100.0	3	2	6	2
37	63	70.0	92.1	5	2	8	3
53.125	63	54.5	54.5	4	2	7	3
19.125	74.25	70.0	100.0	3	2	5	2
26.5	74.25	70.0	100.0	4	2	7	2
37	74.25	70.0	85.6	5	2	9	3
53.125	74.25	50.0	50.0	4	2	7	3

Flange Frame w/ Standard Meeting Rail.
Test # FTL 5283 A-1 - 1/4" Annealed
Negative Pressure Limited to 100psf.

Width (in)	Height (in)	P(+) psf	P(-) psf	#14 or 5/16" Tapcons Jamb Anchors	#14 or 5/16" Tapcons Head Anchors	#12 or 1/4" Tapcons Jamb Anchors	#12 or 1/4" Tapcons Head Anchors
19.125	26	70.0	100.0	2	2	2	2
26.5	26	70.0	100.0	2	2	2	2
37	26	70.0	100.0	2	2	4	2
53.125	26	70.0	100.0	3	2	5	3
19.125	38.375	70.0	100.0	2	2	3	2
26.5	38.375	70.0	100.0	2	2	4	2
37	38.375	70.0	100.0	3	2	5	2
53.125	38.375	70.0	88.6	4	2	6	3
19.125	50.625	70.0	100.0	2	2	3	2
26.5	50.625	70.0	100.0	3	2	5	2
37	50.625	70.0	100.0	4	2	7	3
53.125	50.625	70.0	72.3	4	2	7	3
19.125	58	70.0	100.0	3	2	4	2
26.5	58	70.0	100.0	3	2	6	2
37	58	70.0	100.0	5	2	8	3
53.125	58	66.1	66.1	4	2	7	3
19.125	63	70.0	100.0	3	2	4	2
26.5	63	70.0	100.0	3	2	6	2
37	63	70.0	100.0	5	2	9	3
53.125	63	62.9	62.9	4	2	7	3
19.125	74.25	70.0	100.0	3	2	5	2
26.5	74.25	70.0	100.0	4	2	7	2
37	74.25	70.0	100.0	6	2	10	3
53.125	74.25	57.7	57.7	5	2	8	3

Flange Frame w/ Standard Duty Rail
Test # FTL 5283 A-2 & A-4 - 1/8" Annealed
Negative Pressures limited to 100psf.

Width (in)	Height (in)	P(+) psf	P(-) psf	#14 or 5/16" Tapcons Jamb Anchors	#14 or 5/16" Tapcons Head Anchors	#12 or 1/4" Tapcons Jamb Anchors	#12 or 1/4" Tapcons Head Anchors
19.125	26	70.0	100.0	2	2	2	2
26.5	26	70.0	100.0	2	2	2	2
37	26	70.0	93.8	2	2	4	2
53.125	26	61.4	61.4	2	2	2	2
19.125	38.375	70.0	100.0	2	2	3	2
26.5	38.375	70.0	100.0	2	2	4	2
37	38.375	70.0	70.8	2	2	4	2
53.125	38.375	44.6	44.6	2	2	4	2
19.125	50.625	70.0	100.0	2	2	3	2
26.5	50.625	70.0	95.6	3	2	5	2
37	50.625	60.4	60.4	2	2	4	2
53.125	50.625	36.3	36.3	2	2	4	2
19.125	58	70.0	100.0	3	2	4	2
26.5	58	70.0	86.7	3	2	5	2
37	58	57.0	57.0	2	2	5	2
53.125	58	33.2	33.2	2	2	4	2
19.125	63	70.0	92.3	3	2	4	2
26.5	63	70.0	81.1	3	2	5	2
37	63	55.6	55.6	3	2	5	2
53.125	63	31.6	31.6	2	2	4	2
19.125	74.25	70.0	81.6	3	2	4	2
26.5	74.25	67.4	67.4	3	2	5	2
37	74.25	53.8	53.8	3	2	6	2
53.125	74.25	29.0	29.0	2	2	4	2

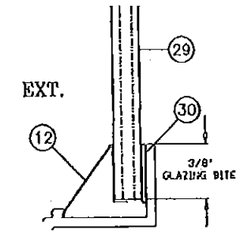

MONOLITHIC GLASS – SINGLE GLAZE
ANNEALED OR TEMPERED
1/8", 3/16" OR 1/4" THICK
(SEE DESIGN PRESSURE TABLES)

GLAZING DETAIL & DESCRIPTION

Flange Frame w/ Heavy Duty Rail - TABLE V-1
Test # FTL 4363 - 3/16" Annealed View
Negative Pressures Limited to 100psf.

CODE SIZE	Width (in)	Height (in)	P(+) psf	P(-) psf	#14 or 5/16" Tapcons Jamb Anchors	#14 or 5/16" Tapcons H&S Anchors	#12 or 1/4" Tapcons Jamb Anchors	#12 or 1/4" Tapcons H&S Anchors
14-2	19.125	50.625	70.0	100.0	3	2	5	2
14-3	19.125	50.625	70.0	100.0	4	2	6	2
15-3	19.125	63	70.0	100.0	4	2	6	2
15-4	19.125	63	70.0	100.0	4	2	7	2
16-4	19.125	74.25	70.0	100.0	4	2	7	2
16-45	19.125	74.25	70.0	100.0	4	2	7	2
16-5	19.125	74.25	70.0	100.0	4	2	7	2
H34-2	26.5	50.625	70.0	100.0	3	2	4	2
H34-3	26.5	50.625	70.0	100.0	4	2	5	2
H35-3	26.5	63	70.0	86.7	3	2	5	2
H35-4	26.5	63	70.0	100.0	4	2	6	2
H36-4	26.5	74.25	70.0	78.0	3	2	5	2
H36-45	26.5	74.25	70.0	84.9	3	2	5	2
H36-5	26.5	74.25	70.0	88.9	3	2	6	2
24-2	37	50.625	70.0	100.0	4	2	6	2
24-3	37	50.625	70.0	90.6	3	2	5	2
25-3	37	63	70.0	73.3	3	2	5	2
25-4	37	63	70.0	83.6	3	2	6	2
26-4	37	74.25	64.4	64.4	4	2	5	2
26-45	37	74.25	70.0	71.7	4	2	6	2
26-5	37	74.25	70.0	75.3	4	2	6	2
34-2	53.125	50.625	59.0	59.0	3	2	4	2
34-3	53.125	50.625	62.4	62.4	3	2	4	2
35-3	53.125	63	55.3	55.3	3	2	5	2
35-4	53.125	63	54.8	54.8	3	2	5	2
36-4	53.125	74.25	51.0	51.0	3	2	5	2
36-45	53.125	74.25	50.8	50.8	3	2	5	2
36-5	53.125	74.25	50.0	50.0	3	2	5	2

Flange Frame w/ Heavy Duty Rail
Test # FTL 4323 - 3/16" Tempered
Negative Pressure Limited to 100psf.

Width (in)	Height (in)	P(+) psf	P(-) psf	#14 or 5/16" Tapcons Jamb Anchors	#14 or 5/16" Tapcons Head Anchors	#12 or 1/4" Tapcons Jamb Anchors	#12 or 1/4" Tapcons Head Anchors
19.125	26	70.0	100.0	2	2	2	2
26.5	26	70.0	100.0	2	2	2	2
37	26	70.0	100.0	2	2	4	2
53.125	26	70.0	100.0	2	2	5	3
19.125	38.375	70.0	100.0	2	2	3	2
26.5	38.375	70.0	100.0	2	2	4	2
37	38.375	70.0	100.0	2	2	5	2
53.125	38.375	70.0	100.0	4	2	7	4
19.125	50.625	70.0	100.0	2	2	3	2
26.5	50.625	70.0	100.0	3	2	5	2
37	50.625	70.0	100.0	4	2	7	3
53.125	50.625	70.0	100.0	6	2	8	4
19.125	58	70.0	100.0	3	2	4	2
26.5	58	70.0	100.0	3	2	6	2
37	58	70.0	100.0	5	2	8	3
53.125	58	70.0	91.6	6	2	9	4
19.125	63	70.0	100.0	3	2	4	2
26.5	63	70.0	100.0	3	2	6	2
37	63	70.0	100.0	5	2	8	4
53.125	63	70.0	87.2	6	2	9	4
19.125	74.25	70.0	100.0	3	2	5	2
26.5	74.25	70.0	100.0	4	2	7	2
37	74.25	70.0	100.0	6	2	10	3
53.125	74.25	70.0	80.0	6	2	10	4

Flange Frame w/ Heavy Duty Rail - TABLE V-2
Test # FTL 4345 - 3/16" Tempered View
Negative Pressure Limited to 100psf.

CODE SIZE	Width (in)	Height (in)	P(+) psf	P(-) psf	#14 or 5/16" Tapcons Jamb Anchors	#14 or 5/16" Tapcons Head Anchors	#12 or 1/4" Tapcons Jamb Anchors	#12 or 1/4" Tapcons Head Anchors
14-2	19.125	50.625	70.0	100.0	2	2	3	2
14-3	19.125	50.625	70.0	100.0	2	2	3	2
15-3	19.125	63	70.0	100.0	3	2	4	2
15-4	19.125	63	70.0	100.0	3	2	4	2
16-4	19.125	74.25	70.0	100.0	3	2	5	2
16-45	19.125	74.25	70.0	100.0	3	2	5	2
16-5	19.125	74.25	70.0	100.0	3	2	5	2
H34-2	26.5	50.625	70.0	100.0	3	2	4	2
H34-3	26.5	50.625	70.0	100.0	3	2	5	2
H35-3	26.5	63	70.0	100.0	3	2	6	2
H35-4	26.5	63	70.0	100.0	3	2	6	2
H36-4	26.5	74.25	70.0	100.0	4	2	7	2
H36-45	26.5	74.25	70.0	100.0	4	2	7	2
H36-5	26.5	74.25	70.0	100.0	4	2	7	2
24-2	37	50.625	70.0	100.0	3	2	6	2
24-3	37	50.625	70.0	100.0	4	2	6	2
25-3	37	63	70.0	100.0	5	2	8	2
25-4	37	63	70.0	100.0	5	2	9	3
26-4	37	74.25	70.0	100.0	6	2	9	4
26-45	37	74.25	70.0	100.0	6	2	9	4
26-5	37	74.25	70.0	100.0	6	2	9	4
34-2	53.125	50.625	70.0	100.0	5	2	8	2
34-3	53.125	50.625	70.0	100.0	5	2	8	3
35-3	53.125	63	70.0	93.0	6	2	9	4
35-4	53.125	63	70.0	87.6	5	2	9	4
36-4	53.125	74.25	70.0	84.1	6	2	9	4
36-45	53.125	74.25	70.0	81.3	6	2	10	4
36-5	53.125	74.25	70.0	80.0	6	2	10	4

PRODUCT REVISED
as complying with the Florida
Building Code
Acceptance No 14-0908.12
Expiration Date 09/01/2015
By
Miami Dade Product Control

PRODUCT RENEWED
as complying with the Florida
Building Code
Acceptance No 15-0511.05
Expiration Date Sept. 1, 2020
By Manuel Perez
Miami Dade Product Control

LAMSON INDUSTRIES, INC.
8501 N.W. 90 ST.
MEDLEY, FLORIDA 33166
PH No. (305) 696-8660

MANUFACTURER OF QUALITY ALUMINUM WINDOWS AND GLASS DOORS

SH-7500 SINGLE HUNG FLANGE WINDOW
GLASS LOAD CHARTS & MONOLITHIC GLAZING DETAIL

Revision #:
Sheet 3 OF 5
Drawing Number: L7500-0401
Product Reference Number:

Revision Notes:
B. Revised glass charts w/ meeting rail types Added Chart w/ 1/8" Tempered Glass
C. Qualified Cam Lock on all windows
D. General notes revised to comply with the 2007 Florida Building Code.
E. Revised to Comply w/ 2010 FBC
F. Revised to Comply w/ 2014 FBC

Drawn By: N. ERAZO — Date Drawn: 09/20/04
Checked By: N. ERAZO — Date Revised: 06/04/14
Revision Level: F — Scale:

THOMAS J. SOTOS
PROFESSIONAL ENGINEER
FL LIC. # 55225

DATE SEP 2014

Flange Frame w/ Standard Meeting Rail
Test # FTL 5283 A-5 - 1/8" Tempered

Negative Pressure Limited to 100psf.

				#14 or 5/16" Tapcons		#12 or 1/4" Tapcons	
Width (in)	Height (in)	P(+) psf	P(-) psf	Jamb Anchors	Head Anchors	Jamb Anchors	Head Anchors
19.125	26	70.0	100.0	2	2	2	2
26.5	26	70.0	100.0	2	2	2	2
37	26	70.0	100.0	2	2	4	2
53.125	26	70.0	100.0	2	2	5	3
19.125	38.375	70.0	100.0	2	2	3	2
26.5	38.375	70.0	100.0	2	2	4	2
37	38.375	70.0	100.0	2	2	5	2
53.125	38.375	70.0	88.6	3	2	6	3
19.125	50.625	70.0	100.0	2	2	3	2
26.5	50.625	70.0	100.0	3	2	5	2
37	50.625	70.0	100.0	3	2	7	3
53.125	50.625	70.0	72.3	3	2	7	3
19.125	58	70.0	100.0	3	2	4	2
26.5	58	70.0	100.0	3	2	6	2
37	58	70.0	100.0	4	2	8	3
53.125	58	66.1	66.1	3	2	7	3
19.125	63	70.0	100.0	3	2	4	2
26.5	63	70.0	100.0	3	2	6	2
37	63	70.0	100.0	4	2	9	3
53.125	63	62.9	62.9	3	2	5	3
19.125	74.25	70.0	100.0	3	2	5	2
26.5	74.25	70.0	100.0	4	2	7	2
37	74.25	70.0	100.0	5	2	10	3
53.125	74.25	57.7	57.7	4	2	9	3

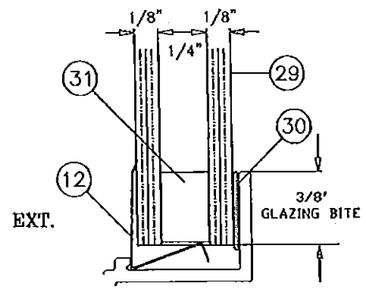

1/2" OVERALL INSULATED GLASS

CONSIST OF:
1/8" ANNEALED OR TEMPERED LITE
+ 1/4" AIR SPACE
+ 1/8" ANNEALED OR TEMPERED LITE
(SEE CORRESPONDING DESIGN PRESSURE CHARTS)

GLAZING DETAIL & DESCRIPTION

Notes

1. BOTH EXTRUDED ALUMINUM AND PLASTIC LIFT HANDLE LOCKS ARE QUALIFIED FOR USE ON ALL WINDOWS.

2. THE CAM LOCK IS QUALIFIED FOR USE ON ALL WINDOWS.

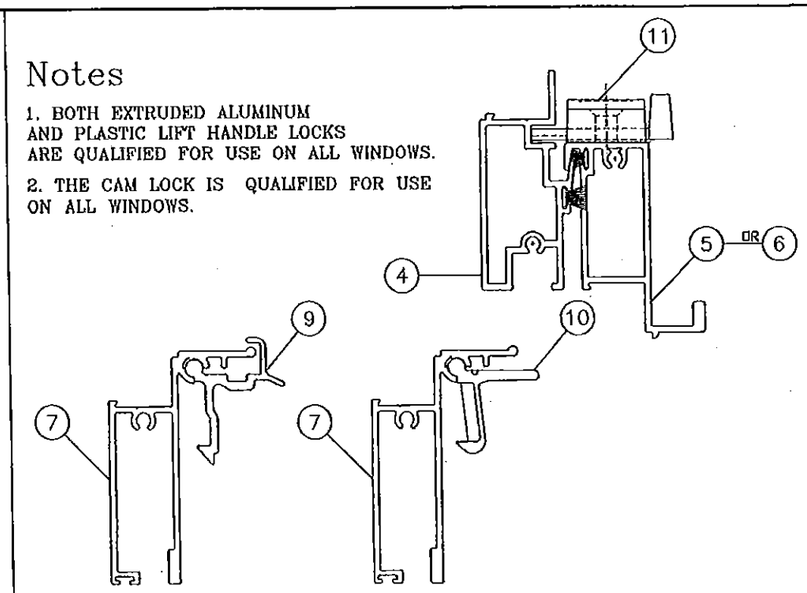

LOCK (LATCH AND SWEEP) OPTIONS

Flange Frame w/ Standard Meeting Rail
Test # FTL 5283 A-3 - 1/2" Overall Insulated w/ 1/8" Annealed

Negative Pressure Limited to 100psf.

				#14 or 5/16" Tapcons		#12 or 1/4" Tapcons	
Width (in)	Height (in)	P(+) psf	P(-) psf	Jamb Anchors	Head Anchors	Jamb Anchors	Head Anchors
19.125	26	70.0	100.0	2	2	4	2
26.5	26	70.0	100.0	3	2	5	2
37	26	70.0	100.0	4	2	6	3
53.125	26	70.0	100.0	3	2	6	3
19.125	38.375	70.0	100.0	3	2	6	2
26.5	38.375	70.0	100.0	5	2	8	3
37	38.375	70.0	100.0	4	2	7	3
53.125	38.375	70.0	80.7	4	2	6	3
19.125	50.625	70.0	100.0	4	2	7	2
26.5	50.625	70.0	100.0	5	2	8	3
37	50.625	70.0	100.0	5	2	8	3
53.125	50.625	65.8	65.8	4	2	7	3
19.125	58	70.0	100.0	4	2	8	2
26.5	58	70.0	100.0	5	2	8	2
37	58	70.0	100.0	5	2	8	3
53.125	58	60.1	60.1	4	2	7	3
19.125	63	70.0	100.0	4	2	7	2
26.5	63	70.0	100.0	5	2	8	2
37	63	70.0	100.0	5	2	9	3
53.125	63	57.2	57.2	4	2	7	3
19.125	74.25	70.0	100.0	4	2	7	2
26.5	74.25	70.0	100.0	5	2	8	2
37	74.25	70.0	96.9	6	2	10	3
53.125	74.25	52.5	52.5	5	2	8	3

Flange Frame w/ Heavy Duty Rail
Test # FTL 4351 - 1/2" Overall Insulated w/ 1/8" Tempered

Negative Pressure Limited to 100psf.

				#14 or 5/16" Tapcons		#12 or 1/4" Tapcons	
Width (in)	Height (in)	P(+) psf	P(-) psf	Jamb Anchors	Head Anchors	Jamb Anchors	Head Anchors
19.125	26	70.0	100.0	2	2	2	2
26.5	26	70.0	100.0	2	2	2	2
37	26	70.0	100.0	2	2	4	2
53.125	26	70.0	100.0	3	2	4	4
19.125	38.375	70.0	100.0	2	2	3	2
26.5	38.375	70.0	100.0	2	2	4	2
37	38.375	70.0	100.0	3	2	5	2
53.125	38.375	70.0	100.0	4	2	7	4
19.125	50.625	70.0	100.0	2	2	3	2
26.5	50.625	70.0	100.0	3	2	5	2
37	50.625	70.0	100.0	4	2	7	3
53.125	50.625	70.0	100.0	5	2	8	4
19.125	58	70.0	100.0	3	2	4	2
26.5	58	70.0	100.0	3	2	6	2
37	58	70.0	100.0	5	2	8	3
53.125	58	70.0	91.6	5	2	9	4
19.125	63	70.0	100.0	3	2	4	2
26.5	63	70.0	100.0	3	2	6	2
37	63	70.0	100.0	5	2	8	4
53.125	63	70.0	87.2	5	2	9	4
19.125	74.25	70.0	100.0	3	2	5	2
26.5	74.25	70.0	100.0	4	2	7	2
37	74.25	70.0	100.0	6	2	10	3
53.125	74.25	70.0	80.0	6	2	10	4

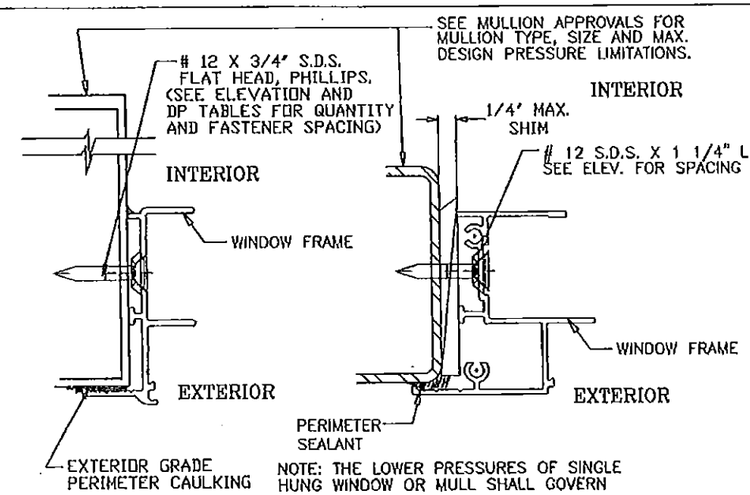

NOTE: THE LOWER PRESSURES OF SINGLE HUNG WINDOW OR MULL SHALL GOVERN

1. ALL STEEL IN CONTACT WITH ALUM. TO BE PAINTED OR PLATED.
2. METAL STRUCTURES:
(STEEL OR ALUM. 1/8" MIN. THICK)
A) STEEL : Fy = 36 KSI MIN.
B) ALUMINUM : 6063-T5 MIN.

(E)

MULLION & METAL STRUCTURE ATTACHMENT DETAIL

PRODUCT RENEWED
as complying with the Florida Building Code
Acceptance No. 15-0511.05
Expiration Date Sept. 1, 2020
By Manuel Perez
Miami-Dade Product Control

PRODUCT REVISED
as complying with the Florida Building Code
Acceptance No 14-0908.12
Expiration Date 09/01/2015
By
Miami-Dade Product Control

LAMSON INDUSTRIES, INC.
8501 N.W. 90 ST.
MEDLEY, FLORIDA 33166
PH No. (305) 696-8660

MANUFACTURER OF QUALITY ALUMINUM WINDOWS AND GLASS DOORS

SH-7500 SINGLE HUNG FLANGE WINDOW

GLASS LOAD CHARTS, INSULATED GLAZING DETAIL & LOCK OPTIONS

Revision #:
Sheet: 4 OF 5
Drawing Number: L7500-0401
Product Reference Number:

Revision Notes:
B. Revised glass charts w/ meeting rail types Added Chart w/ 1/8" Tempered Glass
C. Qualified Cam Lock on all windows
D. General notes revised to comply with the 2007 Florida Building Code.
E. Revised to Comply w/ 2010 FBC
F. Revised to Comply w/ 2014 FBC

Drawn By: N. ERAZO — Date Drawn: 09/20/04
Checked By: N. ERAZO — Date Revised: 08/04/14
Revision Level: F — Scale:

THOMAS J. SOTOS
PROFESSIONAL ENGINEER
FL LIC. # 55225

DATE:

FRAME HEAD
L-7501

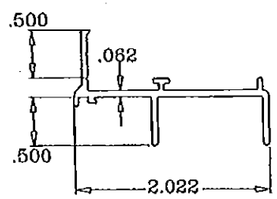

VENT TOP RAIL (Heavy Duty)
L-7506

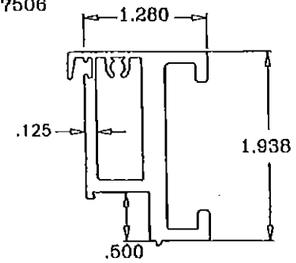

SASH STOP

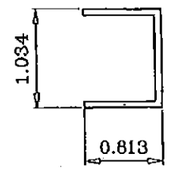

FIXED MEETING RAIL
L-7504

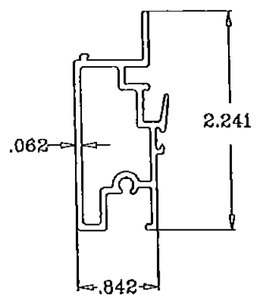

VENT TOP RAIL (Standard Duty)
L-7505

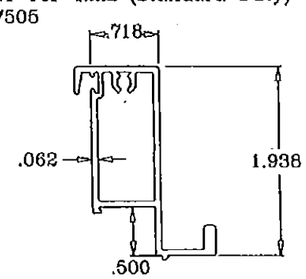

GLAZING BEAD
L-7516

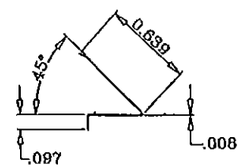

VENT BOTTOM RAIL
L-7507

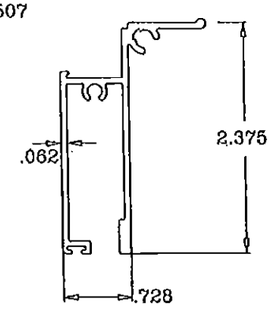

FRAME JAMB
L-7503

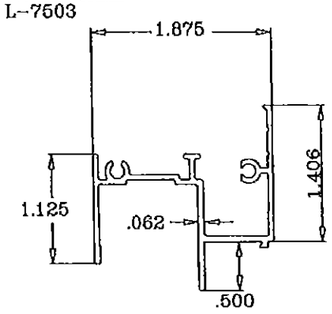

VENT JAMB
L-7508

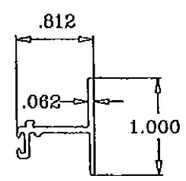

FRAME SILL
L-7502

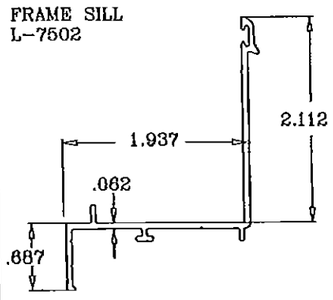

CAM-SWEEP LATCH

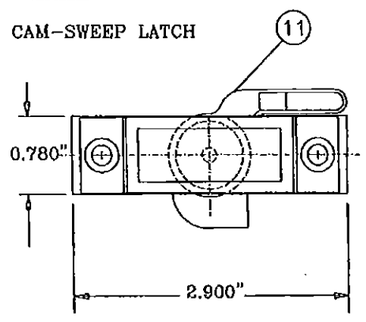

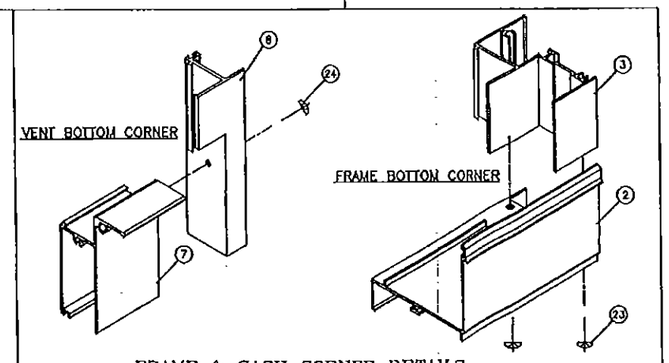

FRAME & SASH CORNER DETAILS

SH7500 FLANGE WINDOW BILL OF MATERIALS

ITEM #	PART #	DRWG. #	REQD.	DESCRIPTION	REMARKS
1	L-7501	LII-121	1	FRAME HEAD	6063-T6 ALUMINUM
2	L-7502	LII-120	1	FRAME SILL	6063-T6 ALUMINUM
3	L-7503	LII-127	2	FRAME JAMB	6063-T6 ALUMINUM
4	L-7504	LII-129	1	FIXED MEETING RAIL	6005-T5 ALUMINUM
5	L-7505	LII-125	1	VENT TOP RAIL STD. DUTY	6005-T5 ALUMINUM
6	L-7506	LII-126	1	VENT TOP RAIL HVY DUTY	6005-T5 ALUMINUM
7	L-7507	LII-136	1	VENT BOTTOM RAIL	6005-T5 ALUMINUM
8	L-7508	LII-124	1	VENT JAMB	6063-T5 ALUMINUM
9	*	*	2	VENT LATCH / LIFT LOCK	6063-T6 ALUMINUM
10	*	*	2	VENT LATCH / LIFT LOCK	INJECTED MOLDED
11	*	*	2	VENT LATCH / SWEEP	DIE CAST
12	L-7516	*	AS REQD.	GLAZING BEAD	ROLL FORMED ALUMINUM
13	*	*	2	VENT/SASH STOP	1 PER REQ'D JAMB
14	*	SCHLEGEL	AS REQD.	TOP RAIL WEATHERSTRIP	.187' X 150' PILE
15	*	ULTRAFAB	AS REQD.	FXD. RAIL WEATHERSTRIP	.187' X 250' FIN SEAL
16	*	ULTRAFAB	AS REQD.	VENT JAMB WEATHERSTRIP	.187' X .280' FIN SEAL
17	*	ULTRAFAB	AS REQD.	FRAME SILL WEATHERSTRIP	.187' X .250' FIN SEAL
18	*	*	AS REQ'D.	3/8' PVC WEATHERSTRIP	3/8' DIA. DUROMETER 65
19	*	*	2	VENT/SILL OPEN CELL PAD	1'x1'x1/2' FOAM PAD
20	*	*	2	SILL/JAMB JOINT GASKET	1/16' CLOSED CELL FOAM
21	L-7523	*	2	VENT TOP GUIDE / CAM	1 AT EACH END OF RAIL
22	L-7524	*	4	VENT JAMB FACE GUIDE	2 PER VENT JAMB
23	*	*	8	FRAME ASSEMBLY SCREWS	# 8 X 3/4' P.H. PHIL.
24	*	*	4	VENT ASSEMBLY SCREWS	# 8 X 1' P.H. PHILLIPS
25	*	*	2	FXD. MTG. RAIL SCREW	# 8 X 1' P.H. PHILLIPS
26	*	*	16 max.	2X FRAME INSTALL'N SCREW	#12 or #14 SMS F.H./PHI.
26	*	*	16 max.	CONC. INSTALL'N SCREW	1/4' or 5/16' TAPCON F.H.
27	L-7527	*	2	BLOCK & TACKLE BALANCE	1 PER JAMB
28	*	*	1	INSECT SCREEN	*
29	*	*	2	GLASS @ TOP & BOTTOM	See Detail @ sheet 2 of 5
30	*	*	AS REQ'D	GLAZING SILICONE	See Detail @ sheet 2 of 5
31	*	774-25B-767	AS REQ'D	'TruSeal' Swiggle Seal	Black -1/4' air space

LAMSON INDUSTRIES, INC.
8501 N.W. 90 ST.
MEDLEY, FLORIDA 33166
PH No. (305) 696-8660

MANUFACTURER OF QUALITY ALUMINUM WINDOWS AND GLASS DOORS

SH-7500 SINGLE HUNG FLANGE WINDOW

BILL OF MATERIALS, EXTRUSION DETAILS & CORNER ASSEMBLY DETAILS

Revision #:
Sheet: 5 OF 5
Drawing Number: L7500-0401
Reference Number:
Product Reference:

Revision Notes:
B. Revised glass charts w/ meeting rail types
Added Chart w/ 1/8" Tempered Glass
C. Qualified Cam Lock on all windows
D. General notes revised to comply with the 2007 Florida Building Code.
E. Revised to Comply w/ 2010 FBC
F. Revised to Comply w/ 2014 FBC

Drawn By: N. ERAZO — Date Drawn: 09/20/04
Checked By: N. ERAZO — Date Revised: 08/04/14
Revision Level: F — Scale:

PRODUCT RENEWED
as complying with the Florida
Building Code
Acceptance No. 15-0511.05
Expiration Date Sept. 1, 2020
By Manuel Perez
Miami Dade Product Control

PRODUCT REVISED
as complying with the Florida
Building Code
Acceptance No. 14-0908.12
Expiration Date 09/01/2016
By
Miami Dade Product Control

THOMAS I. SOTOS
PROFESSIONAL ENGINEER
FL. LIC. # 55225

DATE