MIAMI-DADE COUNTY
DEPARTMENT OF REGULATORY AND ECONOMIC RESOURCES (RER)
BOARD AND CODE ADMINISTRATION DIVISION

MIAMI–DADE COUNTY, FLORIDA
PRODUCT CONTROL SECTION
11805 SW 26 Street, Room 208
T (786) 315–2590 F (786) 315–2599
www.miamidade.gov/economy

NOTICE OF ACCEPTANCE (NOA)

CGI Windows & Doors
10100 NW 25 Street
Miami, Fl. 33172

SCOPE:

This NOA is being issued under the applicable rules and regulations governing the use of construction materials. The documentation submitted has been reviewed and accepted by Miami–Dade County RER–Product Control Section to be used in Miami–Dade County and other areas where allowed by the Authority Having Jurisdiction (AHJ).

This NOA shall not be valid after the expiration date stated below. The Miami–Dade County Product Control Section (In Miami–Dade County) and/ or the AHJ (in areas other than Miami–Dade County) reserve the right to have this product or material tested for quality assurance purposes. If this product or material fails to perform in the accepted manner, the manufacturer will incur the expense of such testing and the AHJ may immediately revoke, modify, or suspend the use of such product or material within their jurisdiction. RER reserves the right to revoke this acceptance, if it is determined by Miami–Dade County Product Control Section that this product or material fails to meet the requirements of the applicable building code.

This product is approved as described herein, and has been designed to comply with the Florida Building Code, including the High Velocity Hurricane Zone.

DESCRIPTION: Series "375" Aluminum Horizontal Rolling Window – L.M.I.

APPROVAL DOCUMENT: Drawing No. **W09–13**, titled "Series–375 Alum. Horiz. Rolling Wdw. (L.M.I.)", sheets 1 through 6, 6.1, 7, 8, 8.1,9 and 10 through 16 of 16, dated 02/27/09, with revision "E" dated 08/04/15, prepared by Al–Farooq Corporation, signed and sealed by Javad Ahmad, P. E., bearing the Miami–Dade County Product Control Revision stamp with the Notice of Acceptance number and expiration date by the Miami–Dade County Product Control Section.

MISSILE IMPACT RATING: Large and Small Missile Impact Resistant

LABELING: Each unit shall bear a permanent label with the manufacturer's name or logo, city, state, series, and following statement: "Miami–Dade County Product Control Approved", unless otherwise noted herein.

RENEWAL of this NOA shall be considered after a renewal application has been filed and there has been no change in the applicable building code negatively affecting the performance of this product.

TERMINATION of this NOA will occur after the expiration date or if there has been a revision or change in the materials, use, and/ or manufacture of the product or process. Misuse of this NOA as an endorsement of any product, for sales, advertising or any other purposes shall automatically terminate this NOA. Failure to comply with any section of this NOA shall be cause for termination and removal of NOA.

ADVERTISEMENT: The NOA number preceded by the words Miami–Dade County, Florida, and followed by the expiration date may be displayed in advertising literature. If any portion of the NOA is displayed, then it shall be done in its entirety.

INSPECTION: A copy of this entire NOA shall be provided to the user by the manufacturer or its distributors and shall be available for inspection at the job site at the request of the Building Official.

This NOA **renews NOA No. 14–0224.11** and consists of this page 1 and evidence pages E–1 and E–2, as well as approval document mentioned above.

The submitted documentation was reviewed by **Manuel Perez, P. E.**

MIAMI-DADE COUNTY APPROVED

8/14/15

CGI Windows & Doors

NOTICE OF ACCEPTANCE: EVIDENCE SUBMITTED

A. DRAWINGS

1. Manufacturer's die drawings and sections.
   (Submitted under NOA No. 09-0402.20)
2. Drawing No. **W09-13**, titled "Series-375 Alum. Horiz. Rolling Wdw. (L.M.I.)", sheets 1 through 6, 6.1, 7, 8, 8.1,9 and 10 through 16 of 16, dated 02/27/09 with revision "**E**" dated 08/04/15, prepared by Al-Farooq Corporation, signed and sealed by Javad Ahmad, P. E.

B. TESTS

1. Test reports on: 1) Uniform Static Air Pressure Test, Loading per FBC TAS 202-94
   2) Large Missile Impact Test, per FBC, TAS 201-94
   3) Cyclic Wind Pressure Loading, per FBC, TAS 203-94

   along with marked-up drawings and installation diagram of a series 7500 PVC fixed window, to qualify DuPont "Butacite" PVB interlayer, Duraseal® and Super Spacer® insulating glass spacer, prepared by Certified Test Laboratories, Test Report No. **CTLA-3056 WA**, dated 03/03/15, signed and sealed by Ramesh C. Patel, P.E.
2. Test reports on: 1) Uniform Static Air Pressure Test, Loading per FBC TAS 202-94
   2) Large Missile Impact Test, per FBC, TAS 201-94
   3) Cyclic Wind Pressure Loading, per FBC, TAS 203-94

   along with marked-up drawings and installation diagram of a series 7400 PVC project out window, to qualify DuPont "Butacite" PVB interlayer, Duraseal® and Super Spacer® insulating glass spacer, prepared by Certified Test Laboratories, Test Report No. **CTLA-3056 WB**, dated 03/03/15, signed and sealed by Ramesh C. Patel, P.E.
3. Test reports on: 1) Uniform Static Air Pressure Test, Loading per FBC TAS 202-94
   2) Large Missile Impact Test, per FBC, TAS 201-94
   3) Cyclic Wind Pressure Loading, per FBC, TAS 203-94

   along with marked-up drawings and installation diagram of a series 238 aluminum fixed window, to qualify DuPont "Butacite" PVB interlayer, Duraseal® and Super Spacer® insulating glass spacer, prepared by Certified Test Laboratories, Test Report No. **CTLA-3056 WC**, dated 04/16/15, signed and sealed by Ramesh C. Patel, P.E.
4. Test reports on: 1) Air Infiltration Test, per FBC, TAS 201-94
   4) Uniform Static Air Pressure Test, Loading per FBC, TAS 202-94
   5) Water Resistance Test, per FBC, TAS 202-94
   6) Small Missile Impact Test, per FBC, TAS 201-94
   7) Cyclic Wind Pressure Loading, per FBC, TAS 203-94
   8) Forced Entry Test, per FBC 2411 3.2.1, TAS 202-94

   along with marked-up drawings and installation diagram of aluminum horizontal sliding windows, prepared by Hurricane Test Laboratory, LLC, Test Report No. **HTL-0080-0907-08**, dated 12/18/08, signed and sealed by Vinu J. Abraham, P. E.
   (Submitted under NOA No. 09-0402.20)

Manuel Perez

Manuel Perez, P. E.
Product Control Examiner
NOA No. 15-0512.03
Expiration Date: June 10, 2019
Approval Date: August 20, 2015

NOTICE OF ACCEPTANCE: EVIDENCE SUBMITTED

C. CALCULATIONS

1. Anchor verification calculations and structural analysis, complying with **FBC 5th Edition (2014)**, prepared by Al-Farooq Corporation, dated 05/27/14, signed and sealed by Javad Ahmad, P. E.
   (Submitted under previous NOA No. 14-0224.11)
2. **Glazing complies with ASTM E1300-09**

D. QUALITY ASSURANCE

1. Miami-Dade Department of Regulatory and Economic Resources (RER).

E. MATERIAL CERTIFICATIONS

1. Notice of Acceptance No. **14-0916.11** issued to **Kuraray America, Inc.** for their **"SentryGlas® (Clear and White) Glass Interlayers"** dated 06/25/15, expiring on 07/04/18.
2. Notice of Acceptance No. **14-0423.15** issued to **Eastman Chemical Company (MA)** for their "**Saflex CP – Saflex and Saflex HP Composite Glass Interlayers with PET Core"** dated 06/19/14, expiring on 12/11/18.

F. STATEMENTS

1. Statement letter of conformance, complying with **FBC 5th Edition (2014)** and of no financial interest, dated 05/29/14, issued by Al-Farooq Corporation, signed and sealed by Javad Ahmad, P. E.
   (Submitted under previous NOA No. 14-0224.11)
2. Laboratory compliance letters for Test Reports No.'s **CTLA-3056 WA**, dated 03/03/15, **CTLA-3056 WB**, dated 03/03/15 and **CTLA-3056 WC**, dated 04/16/15, all issued by Certified Test Laboratories, all signed and sealed by Ramesh C. Patel, P. E.
3. Testing Proposal issued by the Product Control Section, dated 12/16/14, signed by Jaime Gascon, P. E., Section Supervisor.
4. Laboratory compliance letters for Test Report No. **HTL-0080-0907-08**, issued by Hurricane Test Laboratory, LLC, dated 12/18/08, signed and sealed by Vinu J. Abraham, P. E.
   (Submitted under NOA No. 09-0402.20)

G. OTHERS

1. Notice of Acceptance No. **14-0224.11**, issued to CGI Windows & Doors for their Series "375" Aluminum Horizontal Sliding Window – L.M.I., approved on 06/05/14 and expiring on 06/10/19`.

Manuel Perez

Manuel Perez, P. E.
Product Control Examiner
NOA No. 15-0512.03
Expiration Date: June 10, 2019
Approval Date: August 20, 2015

GLASS TYPES

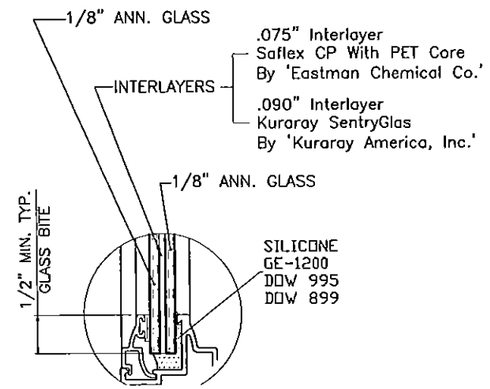

5/16" NOMINAL
GLASS TYPE '1'

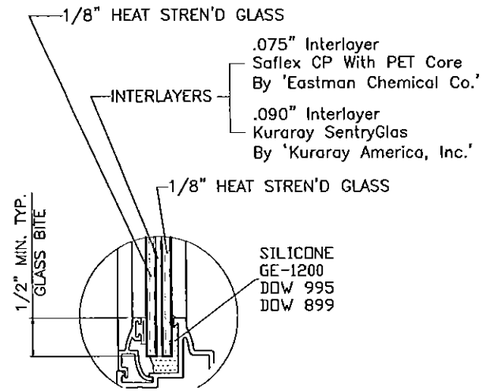

5/16" NOMINAL
GLASS TYPE '2'

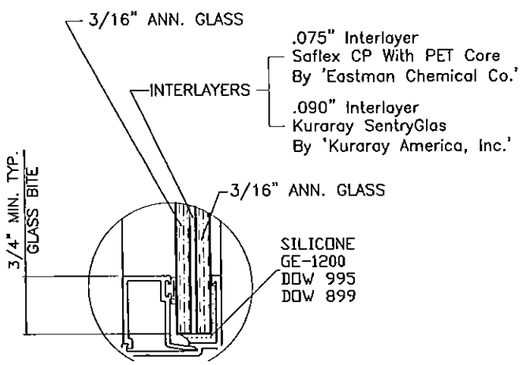

7/16" NOMINAL
GLASS TYPE '3'

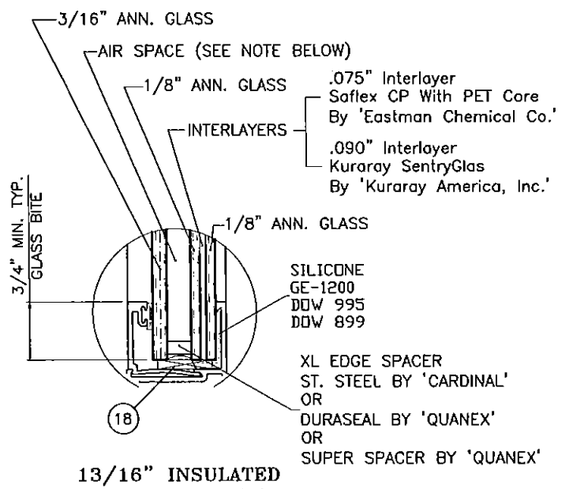

13/16" INSULATED
GLASS TYPE '4'

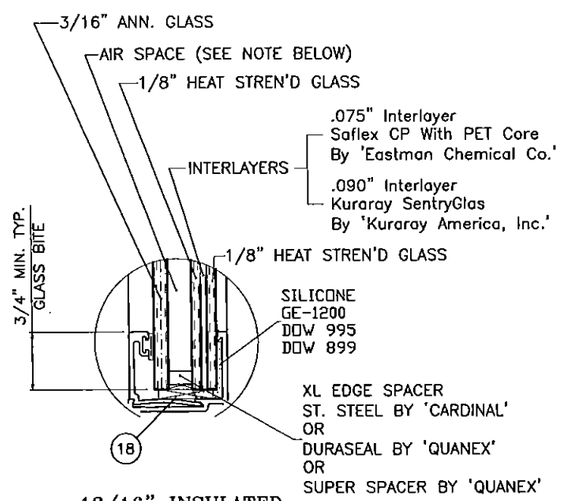

13/16" INSULATED
GLASS TYPE '5'

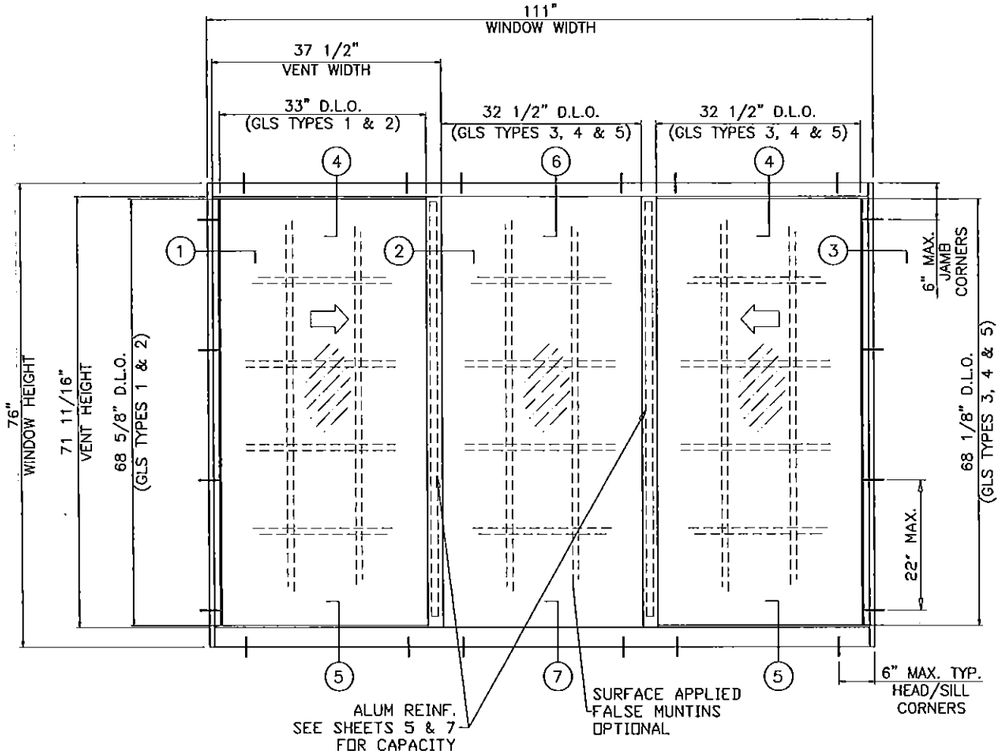

TYPICAL TEST ELEVATION

INSTRUCTIONS FOR USING CAPACITY CHARTS:

STEP 1 DETERMINE THE REQUIRED DESIGN PRESSURES FOR A GIVEN WINDOW OPENING.

STEP 2 DETERMINE THE CAPACITY OF THE WINDOW SIZE/CONFIGURATION/GLASS TYPE FROM CHARTS ON SHEETS 5 AND 7.
FOR INSTALLATION ANCHOR TYPES SEE SHEETS 6 & 8.

STEP 3 IF ALUMINUM BUCKS ARE USED, VERIFY THE BUCK INSTALLATION CAPACITY FROM SHEETS 14 & 15.

STEP 4 FOR UNCLIPPED MULLED WINDOWS DETERMINE MULLION CAPACITY FOR 1X4 TUBE FROM CHARTS ON SHEET 12.

STEP 5 FOR MULLION ANCHOR CAPACITY SEE CHART ON SHEET 13.

THE LOWEST SELECTED VALUE APPLY TO THE INSTALLATION AND MUST EQUAL OR EXCEED THE REQUIRED DESIGN PRESSURES OBTAINED FROM STEP 1.

PRODUCT REVISED
as complying with the Florida
Building Code
Acceptance No. 15-0512.03
Expiration Date 06/10/2019
By Manuel Perez
Miami Dade Product Control

THESE WINDOWS ARE RATED FOR LARGE MISSILE IMPACT. SHUTTERS ARE NOT REQUIRED.

NOTES:

THIS PRODUCT HAS BEEN DESIGNED AND TESTED TO COMPLY WITH THE REQUIREMENTS OF THE FLORIDA BUILDING CODE INCLUDING HIGH VELOCITY HURRICANE ZONE (HVHZ).

WOOD BUCKS BY OTHERS, MUST BE ANCHORED PROPERLY TO TRANSFER LOADS TO THE STRUCTURE.

ANCHORS SHALL BE AS LISTED, SPACED AS SHOWN ON DETAILS, ANCHORS EMBEDMENT TO BASE MATERIAL SHALL BE BEYOND WALL DRESSING OR STUCCO.

ANCHORING OR LOADING CONDITIONS NOT SHOWN IN THESE DETAILS ARE NOT PART OF THIS APPROVAL.

A LOAD DURATION INCREASE IS USED IN DESIGN OF ANCHORS INTO WOOD ONLY.

MATERIALS INCLUDING BUT NOT LIMITED TO STEEL/METAL SCREWS, THAT COME INTO CONTACT WITH OTHER DISSIMILAR MATERIALS SHALL MEET THE REQUIREMENTS OF THE FLORIDA BLDG. CODE.

Engr: JAVAD AHMAD
CIVIL
FLA. PE # 70592
C.A.N. 3538
AUG 07 2015

AL-FAROOQ CORPORATION
ENGINEERS & PRODUCT DEVELOPMENT
1235 S.W. 87 AVE
MIAMI, FLORIDA 33174
TEL. (305) 264-8100 FAX. (305) 262-6978
COMP-ANL\W09-13CGI

SERIES-375 ALUM. HORIZ. ROLLING WDW. (L.M.I.)

CGI WINDOWS & DOORS
10100 N.W. 25TH STREET
DORAL, FL. 33172
TEL. (305) 593-6590 FAX. (305) 593-6592

revisions:

no	date	by	description
A	01.06.12		UPDATED TO 2010 FBC
B	02.10.14		INTERLAYER NAMES REV.
C	05.28.14		REV. PER RER COMMENTS
D	05.05.15		SPACER REV.
E	08.04.15		REV. PER RER COMMENTS

date: 02-27-09
scale: -
dr. by: -
chk. by:

drawing no.
W09-13

GENERAL WINDOW SECTIONS
FLANGE FRAME

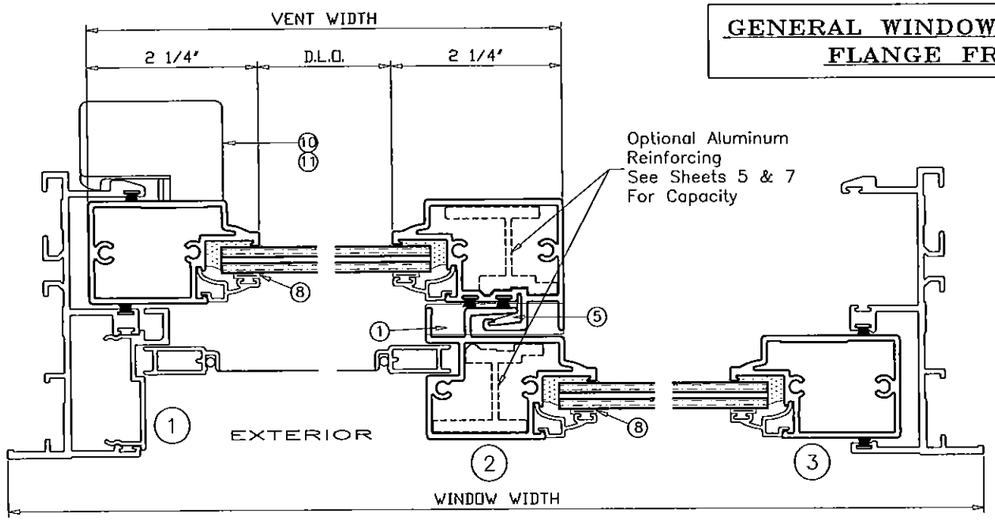

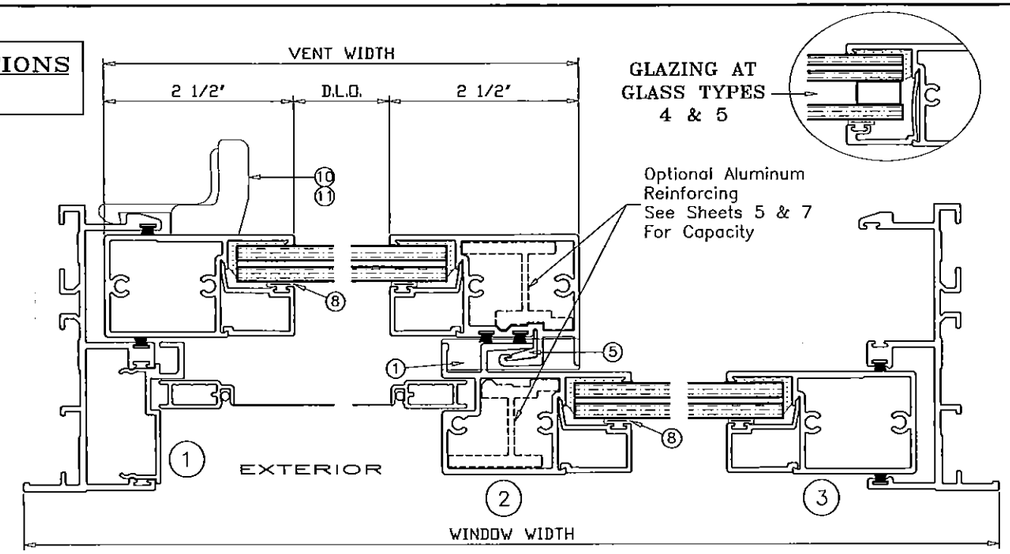

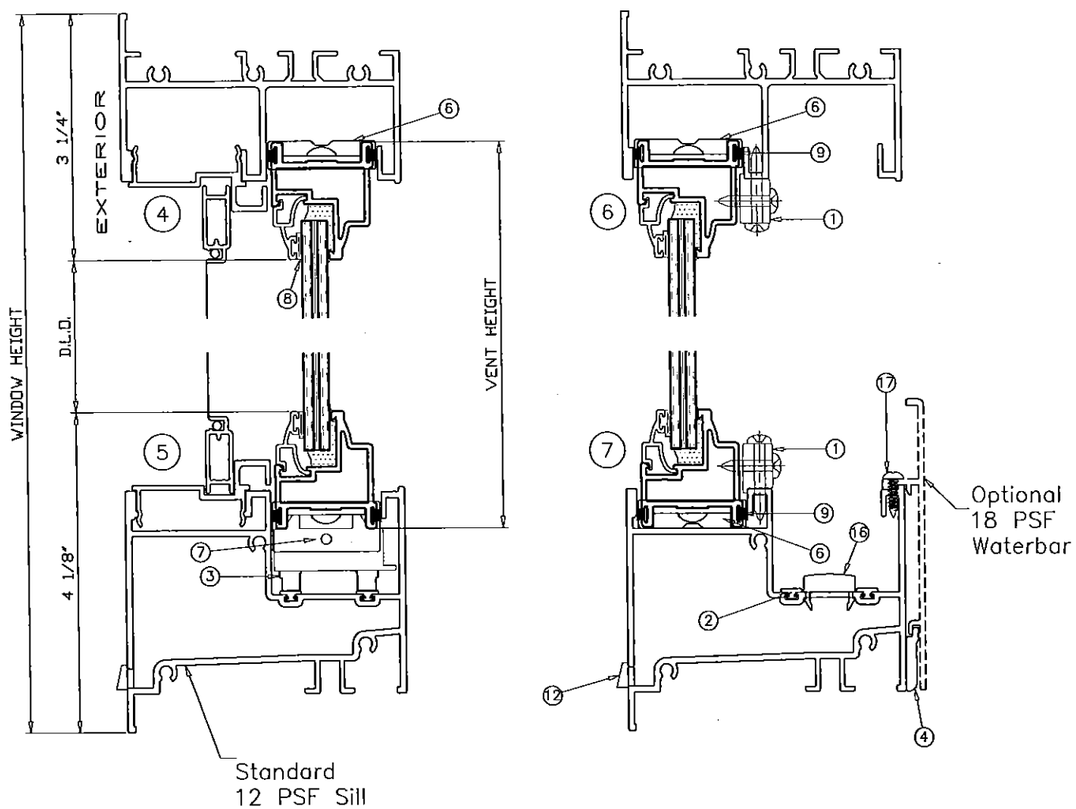

GLASS TYPES
1 & 2

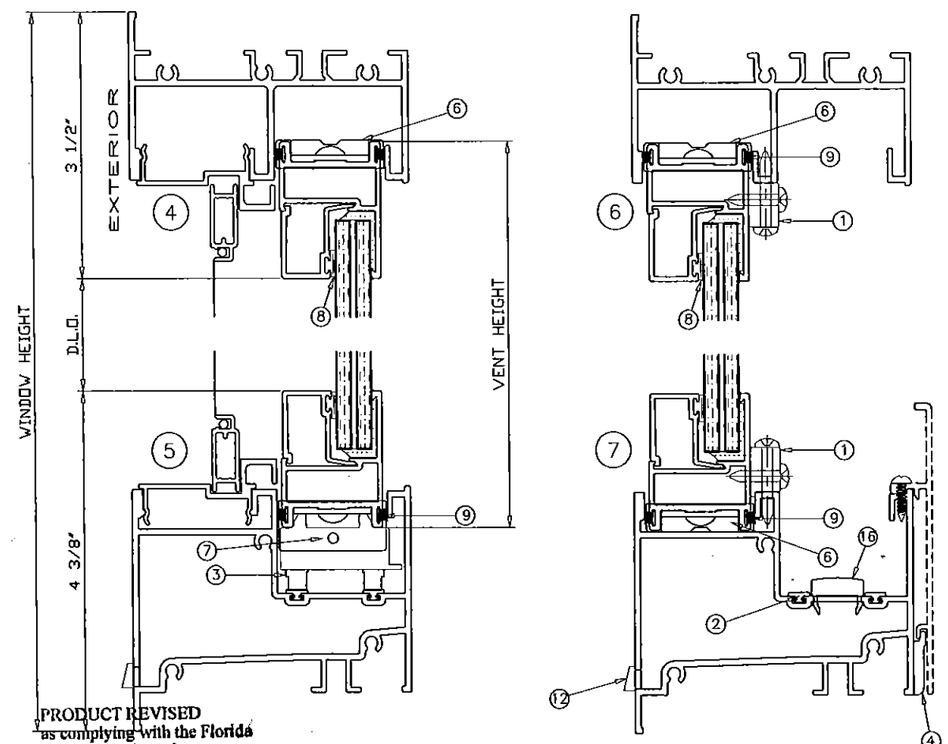

GLASS TYPES
3, 4, & 5

PRODUCT REVISED
as complying with the Florida
Building Code
Acceptance No 15-0512.03
Expiration Date 06/10/2019
By Manuel Perez
Miami Dade Product Control

Engr: JAVAD AHMAD
CIVIL
FLA. PE # 70592
C.A.N. 3538
AUG 07 2015

AL-FAROOQ CORPORATION
ENGINEERS & PRODUCT DEVELOPMENT
1235 S.W. 87 AVE
MIAMI, FLORIDA 33174
TEL. (305) 264-8100 FAX. (305) 262-6978
COMP-ANL\W09-13CGI

SERIES-375 ALUM. HORIZ. ROLLING WDW. (L.M.I.)

CGI WINDOWS & DOORS
10100 N.W. 25TH STREET
DORAL, FL. 33172
TEL. (305) 593-6590 FAX. (305) 593-6592

revisions:

no	date	by	description
A	01.06.12		NO CHANGE THIS SHEET
B	02.10.14		NO CHANGE THIS SHEET
C	05.28.14		REV. PER RER COMMENTS
D	05.05.15		NO CHANGE THIS SHEET
E	08.04.15		NO CHANGE THIS SHEET

date: 02-27-09
scale: -
dr. by: -
chk. by:

drawing no.
W09-13

GENERAL WINDOW SECTIONS
EQUAL LEG FRAME

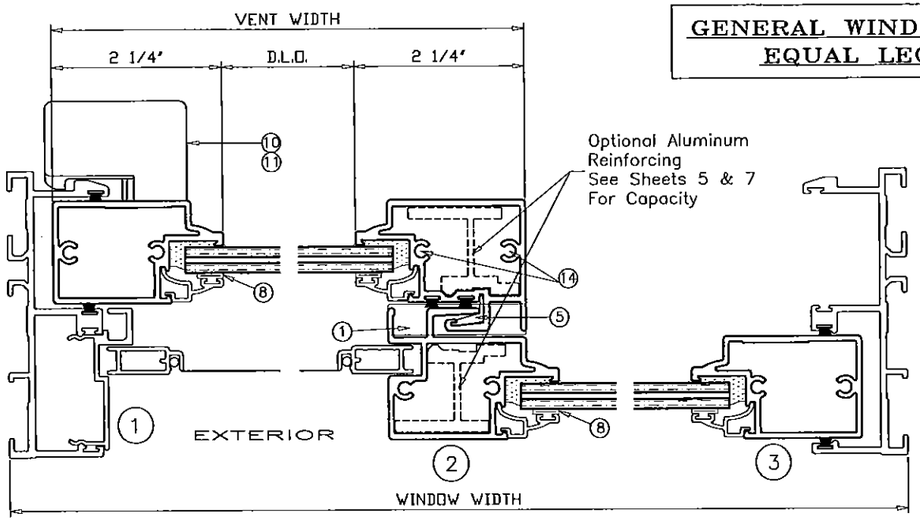

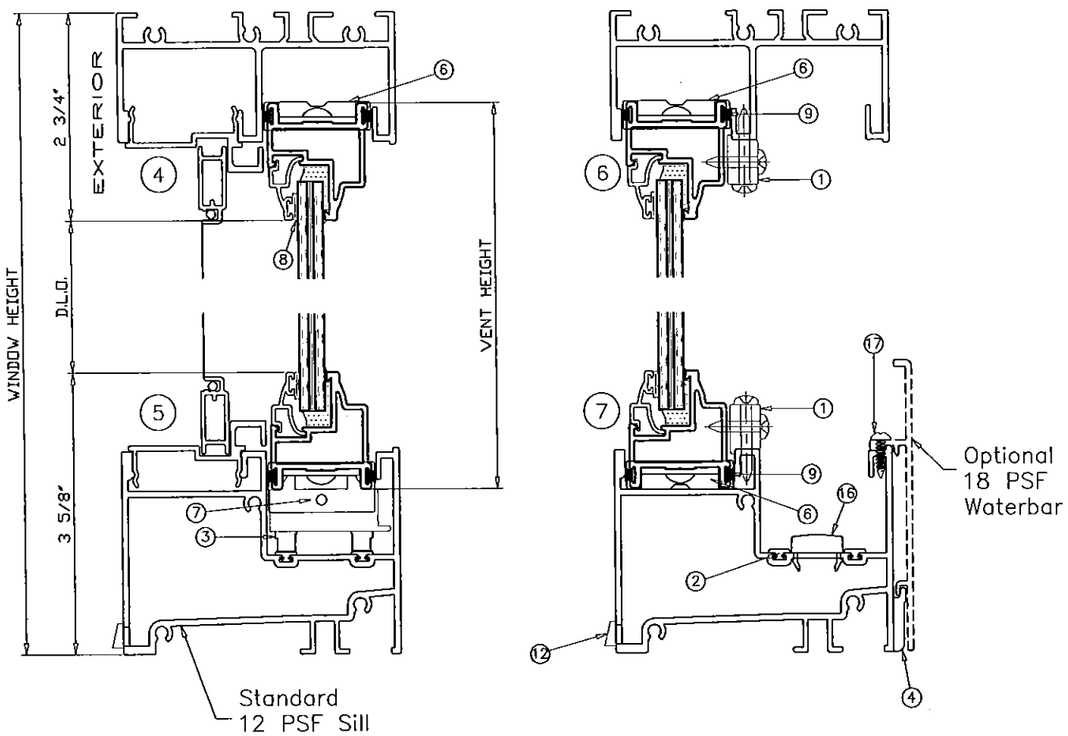

GLASS TYPES
1 & 2

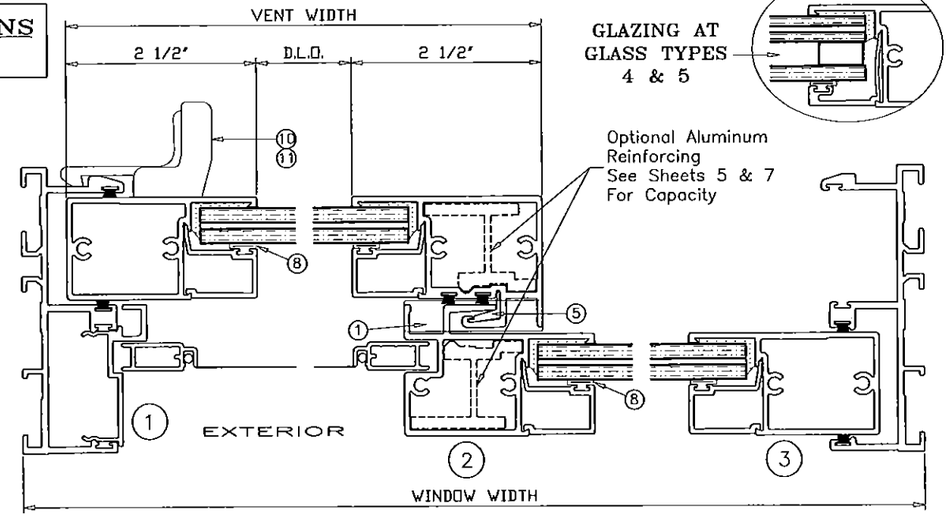

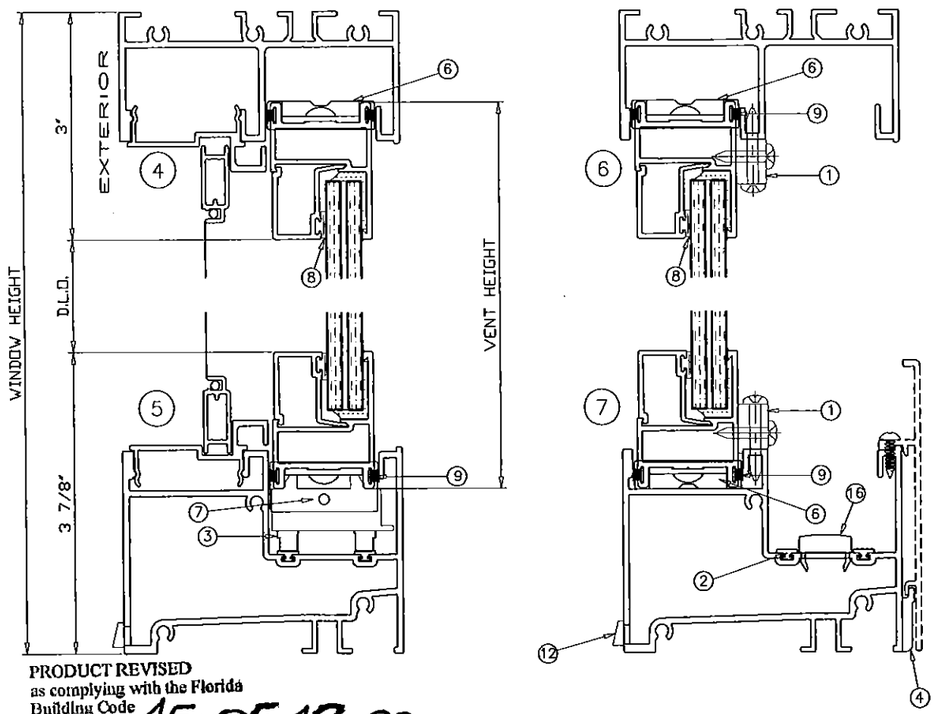

GLASS TYPES
3, 4, & 5

PRODUCT REVISED
as complying with the Florida
Building Code
Acceptance No 15-0512.03
Expiration Date 06/10/2019
By Manuel Perez
Miami Dade Product Control

Engr: JAVAD AHMAD
CIVIL
FLA. PE # 70592
C.A.N. 3538
AUG 07 2015

AL-FAROOQ CORPORATION
ENGINEERS & PRODUCT DEVELOPMENT
1235 S.W. 87 AVE
MIAMI, FLORIDA 33174
TEL. (305) 264-8100 FAX. (305) 262-6978
COMP-ANL\W09-13CGI

SERIES-375 ALUM. HORIZ. ROLLING WDW. (L.M.I.)

CGI WINDOWS & DOORS
10100 N.W. 25TH STREET
DORAL, FL. 33172
TEL. (305) 593-6590 FAX. (305) 593-6592

revisions:

no	date	by	description
A	01.06.12		NO CHANGE THIS SHEET
B	02.10.14		NO CHANGE THIS SHEET
C	05.28.14		REV. PER RER COMMENTS
D	05.05.15		NO CHANGE THIS SHEET
E	08.04.15		NO CHANGE THIS SHEET

date: 02-27-09
scale: -
dr. by: -
chk. by:

drawing no.
W09-13

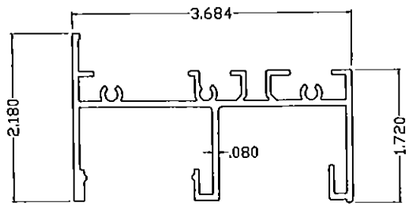

CGI-650
FLANGE FRAME HEAD
6063-T6

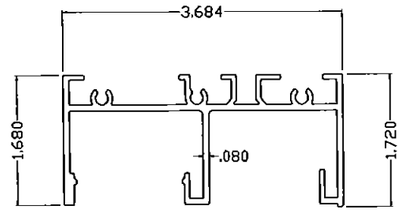

CGI-656
EQUAL LEG FRAME HEAD
6063-T6

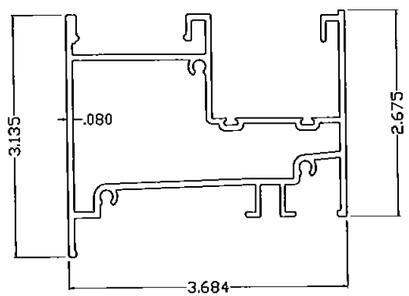

CGI-651
FLANGE FRAME SILL
6063-T6

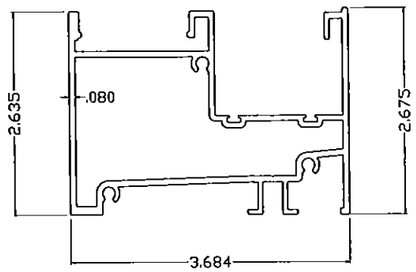

CGI-657
EQUAL LEG FRAME SILL
6063-T6

ITEM	PART #	QUANTITY	DESCRIPTION	MATERIAL	MANF./SUPPLIER	REMARKS
1	CGI-614C	2	TIE DOWN BLOCK	ZINC	CUSTOM CASTING	w/ (2) #10 x 3/4" FH SMS into vent & (3) #8 x 1" FH SMS into frame
2	CGI-684	2	ROLLER TRACK INSERT	PVC	CGI EXTRUSION	Continous at frame sill
3	CGI-680	AS REQD.	QUAD ROLLER	NYLON	CUSTOM CASTING	Attached to CGI-685 (vent bottom clip) w/ (1) #6 x 1/2" FH SMS
4	CGI-683	3	WATERBAR CLIP	NYLON	CUSTOM CASTING	w/ (1) #10 x 3/4" FH SMS
5	CGI-612P	1/ INTRLK	INTERLOCK SNUBBER	PVC	CGI EXTRUSION	Continous at interlock
6	CGI-681	2/ OPER 4/ FXD	VENT END CLIP	NYLON	CUSTOM CASTING	Attached w/ vent assembly screws
7	CGI-685	2	OPERABLE VENT BOTTOM CLIP	NYLON	CUSTOM CASTING	Attached w/ vent assembly screws
8	CGI-382V	AS REQD.	VINYL BULB	PVC	CGI EXTRUSION	
9	W2301NG	AS REQD.	WOOL PILE WITH CENTER SOFT FIN (GRAY)	PILE	ULTRAFAB/SCHLEGEL	
10	CGI-615C & 616C	1	EGRESS LOCK AND PULL	ZINC	CUSTOM CASTING	w/ (2) #8 x 5/8" FH SMS
11	CGI-682	1	SELF CLOSING LOCK	ZINC	CUSTOM CASTING	w/ (2) #8 x 5/8" FH SMS
12	HI-FLO WEEPER	3 OR 4	WEEP HOLE COVER	NYLON	PEP	
13	–	3/ CORNER	FRAME ASSEMBLY SCREWS	S/S	VARIES	#10 x 1 1/4" PH SMS
14	–	2/ CORNER	VENT ASSEMBLY SCREWS	S/S	VARIES	#10 x 1 1/4" PH SMS
15	GE-2000	AS REQD.	LOW MODULUS SEALANT	SILICONE	GENERAL ELECTRIC	AT FRAME JOINTS
16	CGI-686	AS REQD.	ACCESS HOLE COVER (w/DRAIN PROVISION)	NYLON	CUSTOM CASTING	Minimum 1 at each Sill install. screw
17	–	AS REQD.	WATERBAR SCREWS AT 25" O.C. MAX.	S/S	VARIES	#6 X 1/4" PH SMS
18	–	2/ LITE	SETTING BLOCK	EPDM	VARIES	DUROMETER 85±5 SHORE A

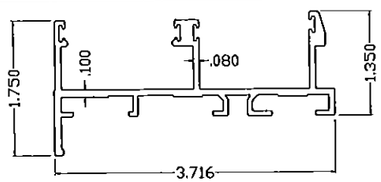

CGI-652
FLANGE FRAME JAMB
6063-T6

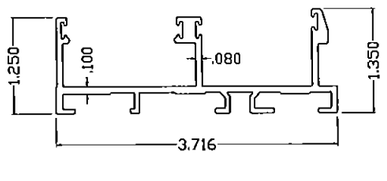

CGI-658
EQUAL LEG FRAME JAMB
6063-T6

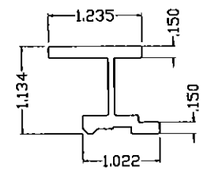

CGI-655
REINFORCEMENT
6063-T6

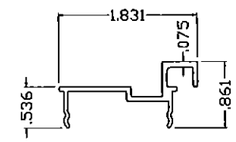

CGI-654
SCREEN ADAPTOR
6063-T5

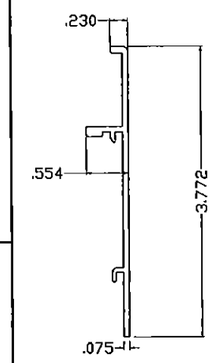

CGI-653
WATERBAR
6063-T5

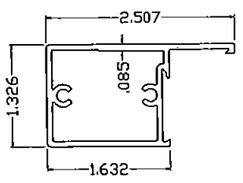

CGI-625
SQUARE LOCK STILE
6063-T6

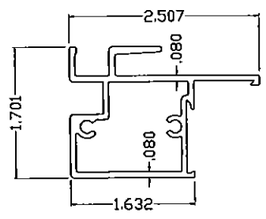

CGI-626
SQUARE FIXED INTERLOCK
6063-T6

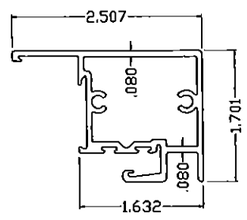

CGI-627
SQUARE OPERABLE INTERLOCK
6063-T6

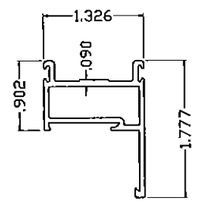

CGI-628
SQUARE TOP/BOTTOM RAIL
6063-T6

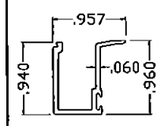

CGI-630
7/16" GLAZING BEAD
6063-T6

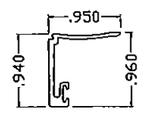

CGI-629
IG GLAZING BEAD
6063-T6

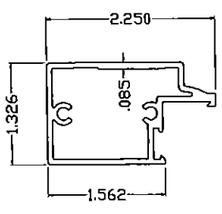

CGI-604
OGEE LOCK STILE
6063-T6

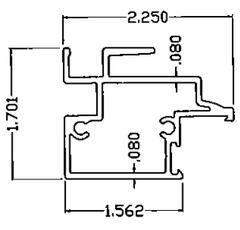

CGI-605
OGEE FIXED INTERLOCK
6063-T6

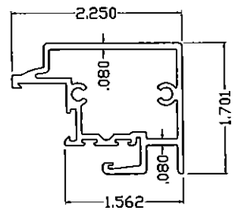

CGI-606
OGEE OPERABLE INTERLOCK
6063-T6

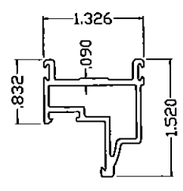

CGI-607
OGEE TOP/BOTTOM RAIL
6063-T6

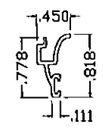

CGI-609
5/16" GLAZING BEAD
6063-T5

PRODUCT REVISED
as complying with the Florida
Building Code
Acceptance No 15-0512.03
Expiration Date 06/30/2019
By Manuel Perez
Miami Dade Product Control

Engr: JAVAD AHMAD
CIVIL
FLA. PE # 70592
C.A.N. 3538

AUG 07 2015

AL-FAROOQ CORPORATION
ENGINEERS & PRODUCT DEVELOPMENT
1235 S.W. 87 AVE
MIAMI, FLORIDA 33174
TEL. (305) 264-8100 FAX. (305) 262-6978
COMP-ANL\W09-13CGI

SERIES-375 ALUM. HORIZ. ROLLING WDW. (L.M.I.)

CGI WINDOWS & DOORS
10100 N.W. 25TH STREET
DORAL, FL. 33172
TEL. (305) 593-6590 FAX. (305) 593-6592

revisions:

no	date	by	description
A	01.06.12		NO CHANGE THIS SHEET
B	02.10.14		NO CHANGE THIS SHEET
C	05.28.14		REV. PER RER COMMENTS
D	05.05.15		NO CHANGE THIS SHEET
E	08.04.15		NO CHANGE THIS SHEET

date: 02-27-09
scale: –
dr. by: –
chk. by:

drawing no.
W09-13

WINDOW DIMS.			INTERLOCKS WITHOUT REINFORCING						INTERLOCKS WITH REINFORCING					
WIDTH		HEIGHT	GLASS TYPE 1		GLASS TYPE 4		GLASS TYPES 2, 3 & 5		GLASS TYPE 2		GLASS TYPE 3		GLASS TYPE 5	
2 PANEL	3 PANEL		EXT.(+)	INT.(−)	EXT.(+)	INT.(−)	EXT.(+)	INT.(−)	EXT.(+)	INT.(−)	EXT.(+)	INT.(−)	EXT.(+)	INT.(−)
36"	54"	36"	120.0	150.0	120.0	150.0	120.0	150.0	120.0	150.0	120.0	150.0	120.0	150.0
42"	63"		120.0	150.0	120.0	150.0	120.0	150.0	120.0	150.0	120.0	150.0	120.0	150.0
48"	72"		120.0	150.0	120.0	150.0	120.0	150.0	120.0	150.0	120.0	150.0	120.0	150.0
54"	81"		120.0	150.0	120.0	150.0	120.0	150.0	120.0	150.0	120.0	150.0	120.0	150.0
60"	90"		120.0	150.0	120.0	150.0	120.0	150.0	120.0	150.0	120.0	150.0	120.0	150.0
66"	99"		120.0	150.0	120.0	150.0	120.0	150.0	120.0	150.0	120.0	150.0	120.0	150.0
72"	108"		120.0	145.2	120.0	150.0	120.0	150.0	120.0	150.0	120.0	150.0	120.0	150.0
78"	117"		120.0	130.6	120.0	145.7	120.0	150.0	120.0	150.0	120.0	150.0	120.0	150.0
84"	126"		118.3	118.3	120.0	131.9	120.0	150.0	120.0	150.0	120.0	150.0	120.0	150.0
36"	54"	48"	120.0	150.0	120.0	150.0	120.0	150.0	120.0	150.0	120.0	150.0	120.0	150.0
42"	63"		120.0	135.1	120.0	135.1	120.0	150.0	120.0	150.0	120.0	150.0	120.0	150.0
48"	72"		120.0	123.1	120.0	123.1	120.0	150.0	120.0	150.0	120.0	150.0	120.0	150.0
54"	81"		114.2	114.2	114.2	114.2	120.0	150.0	120.0	150.0	120.0	150.0	120.0	150.0
60"	90"		107.4	107.4	107.4	107.4	120.0	150.0	120.0	150.0	120.0	150.0	120.0	150.0
66"	99"		102.3	102.3	102.3	102.3	120.0	150.0	120.0	150.0	120.0	150.0	120.0	150.0
72"	108"		98.5	98.5	98.5	98.5	120.0	147.7	120.0	150.0	120.0	150.0	120.0	150.0
78"	117"		85.0	85.0	85.0	85.0	100.0	100.0	120.0	120.0	120.0	120.0	120.0	120.0
84"	126"		83.9	83.9	85.0	85.0	100.0	100.0	120.0	120.0	120.0	120.0	120.0	120.0
36"	54"	54"	120.0	131.3	120.0	131.3	120.0	150.0	120.0	150.0	120.0	150.0	120.0	150.0
42"	63"		116.4	116.4	116.4	116.4	120.0	150.0	120.0	150.0	120.0	150.0	120.0	150.0
48"	72"		105.5	105.5	105.5	105.5	120.0	150.0	120.0	150.0	120.0	150.0	120.0	150.0
54"	81"		97.3	97.3	97.3	97.3	120.0	145.9	120.0	150.0	120.0	150.0	120.0	150.0
60"	90"		90.9	90.9	90.9	90.9	120.0	136.4	120.0	150.0	120.0	150.0	120.0	150.0
66"	99"		86.0	86.0	86.0	86.0	120.0	128.9	120.0	150.0	120.0	150.0	120.0	150.0
72"	108"		82.1	82.1	82.1	82.1	100.0	100.0	120.0	120.0	120.0	120.0	120.0	120.0
78"	117"		78.6	78.6	79.1	79.1	100.0	100.0	120.0	120.0	120.0	120.0	120.0	120.0
84"	126"		74.6	74.6	76.7	76.7	100.0	100.0	120.0	120.0	120.0	120.0	120.0	120.0
36"	54"	60"	115.9	115.9	115.9	115.9	120.0	150.0	120.0	150.0	120.0	150.0	120.0	150.0
42"	63"		102.3	102.3	102.3	102.3	120.0	150.0	120.0	150.0	120.0	150.0	120.0	150.0
48"	72"		92.3	92.3	92.3	92.3	120.0	138.5	120.0	150.0	120.0	150.0	120.0	150.0
54"	81"		84.7	84.7	84.7	84.7	120.0	127.1	120.0	150.0	120.0	150.0	120.0	150.0
60"	90"		78.8	78.8	78.8	78.8	118.2	118.2	120.0	150.0	120.0	150.0	120.0	150.0
66"	99"		74.1	74.1	74.1	74.1	100.0	100.0	120.0	120.0	120.0	120.0	120.0	120.0
72"	108"		70.4	70.4	70.4	70.4	100.0	100.0	120.0	120.0	120.0	120.0	120.0	120.0
78"	117"		67.3	67.3	67.3	67.3	100.0	100.0	120.0	120.0	117.7	117.7	120.0	120.0
84"	126"		64.9	64.9	64.9	64.9	97.4	97.4	120.0	120.0	110.6	110.6	120.0	120.0
36"	54"	66"	103.7	103.7	103.7	103.7	120.0	150.0	120.0	150.0	120.0	150.0	120.0	150.0
42"	63"		91.3	91.3	91.3	91.3	120.0	136.9	120.0	150.0	120.0	150.0	120.0	150.0
48"	72"		82.1	82.1	82.1	82.1	120.0	123.1	120.0	150.0	120.0	150.0	120.0	150.0
54"	81"		75.0	75.0	75.0	75.0	112.6	112.6	120.0	150.0	120.0	150.0	120.0	150.0
60"	90"		69.5	69.5	69.5	69.5	100.0	100.0	120.0	120.0	120.0	120.0	120.0	120.0
66"	99"		65.1	65.1	65.1	65.1	97.7	97.7	120.0	120.0	120.0	120.0	120.0	120.0
72"	108"		61.6	61.6	61.6	61.6	92.3	92.3	120.0	120.0	116.7	116.7	120.0	120.0
78"	117"		58.7	58.7	58.7	58.7	88.0	88.0	117.3	117.3	107.3	107.3	117.3	117.3
84"	126"		56.3	56.3	56.3	56.3	84.4	84.4	112.6	112.6	100.9	100.9	112.6	112.6
36"	54"	72"	93.8	93.8	93.8	93.8	120.0	140.7	120.0	150.0	120.0	150.0	120.0	150.0
42"	63"		82.4	82.4	82.4	82.4	120.0	123.5	120.0	150.0	120.0	150.0	120.0	150.0
48"	72"		73.9	73.9	73.9	73.9	110.8	110.8	120.0	147.7	120.0	147.7	120.0	147.7
54"	81"		67.3	67.3	67.3	67.3	100.0	100.0	120.0	120.0	120.0	120.0	120.0	120.0
60"	90"		62.2	62.2	62.2	62.2	93.3	93.3	120.0	120.0	120.0	120.0	120.0	120.0
66"	99"		58.1	58.1	58.1	58.1	87.1	87.1	116.2	116.2	116.2	116.2	116.2	116.2
72"	108"		54.7	54.7	54.7	54.7	82.1	82.1	109.4	109.4	107.5	107.5	109.4	109.4
78"	117"		52.0	52.0	52.0	52.0	77.9	77.9	103.9	103.9	98.2	98.2	103.9	103.9
36"	54"	76"	88.2	88.2	88.2	88.2	120.0	132.3	120.0	150.0	120.0	150.0	120.0	150.0
42"	63"		77.3	77.3	77.3	77.3	116.0	116.0	120.0	150.0	120.0	150.0	120.0	150.0
48"	72"		69.3	69.3	69.3	69.3	100.0	100.0	120.0	120.0	120.0	120.0	120.0	120.0
54"	81"		63.0	63.0	63.0	63.0	94.6	94.6	120.0	120.0	120.0	120.0	120.0	120.0
60"	90"		58.1	58.1	58.1	58.1	87.2	87.2	116.3	116.3	116.3	116.3	116.3	116.3
66"	99"		54.2	54.2	54.2	54.2	81.3	81.3	108.4	108.4	108.4	108.4	108.4	108.4
72"	108"		50.8	50.8	50.9	50.9	76.4	76.4	101.7	101.7	101.9	101.9	101.9	101.9

WINDOW DIMS.			INTERLOCKS WITHOUT REINFORCING						INTERLOCKS WITH REINFORCING					
WIDTH		HEIGHT	GLASS TYPE 1		GLASS TYPE 4		GLASS TYPES 2, 3 & 5		GLASS TYPE 2		GLASS TYPE 3		GLASS TYPE 5	
2 PANEL	3 PANEL		EXT.(+)	INT.(−)	EXT.(+)	INT.(−)	EXT.(+)	INT.(−)	EXT.(+)	INT.(−)	EXT.(+)	INT.(−)	EXT.(+)	INT.(−)
26-1/2"	39-3/4"	38-3/8"	120.0	150.0	120.0	150.0	120.0	150.0	120.0	150.0	120.0	150.0	120.0	150.0
37"	55-1/2"		120.0	150.0	120.0	150.0	120.0	150.0	120.0	150.0	120.0	150.0	120.0	150.0
53-1/8"	79-11/16"		120.0	150.0	120.0	150.0	120.0	150.0	120.0	150.0	120.0	150.0	120.0	150.0
74"	111"		120.0	131.8	120.0	144.7	120.0	150.0	120.0	150.0	120.0	150.0	120.0	150.0
79-1/2"	119-1/4"		120.0	120.2	120.0	134.1	120.0	150.0	120.0	150.0	120.0	150.0	120.0	150.0
106-1/4"	159-3/8"		80.7	80.7	85.0	85.0	100.0	100.0	120.0	120.0	120.0	120.0	120.0	120.0
26-1/2"	39-3/4"	50-5/8"	120.0	150.0	120.0	150.0	120.0	150.0	120.0	150.0	120.0	150.0	120.0	150.0
37"	55-1/2"		120.0	139.0	120.0	139.0	120.0	150.0	120.0	150.0	120.0	150.0	120.0	150.0
53-1/8"	79-11/16"		107.2	107.2	107.2	107.2	120.0	150.0	120.0	150.0	120.0	150.0	120.0	150.0
74"	111"		85.0	85.0	85.0	85.0	100.0	100.0	120.0	120.0	120.0	120.0	120.0	120.0
79-1/2"	119-1/4"		83.2	83.2	85.0	85.0	100.0	100.0	120.0	120.0	120.0	120.0	120.0	120.0
106-1/4"	159-3/8"		66.0	66.0	73.6	73.6	100.0	100.0	120.0	120.0	107.6	107.6	120.0	120.0
26-1/2"	39-3/4"	63"	120.0	142.4	120.0	142.4	120.0	150.0	120.0	150.0	120.0	150.0	120.0	150.0
37"	55-1/2"		107.0	107.0	107.0	107.0	120.0	150.0	120.0	150.0	120.0	150.0	120.0	150.0
53-1/8"	79-11/16"		80.5	80.5	80.5	80.5	120.0	120.8	120.0	150.0	120.0	150.0	120.0	150.0
74"	111"		64.6	64.6	64.6	64.6	96.9	96.9	120.0	120.0	118.3	118.3	120.0	120.0
79-1/2"	119-1/4"		62.1	62.1	62.1	62.1	93.1	93.1	120.0	120.0	110.4	110.4	120.0	120.0
26-1/2"	39-3/4"	72"	120.0	122.8	120.0	122.8	120.0	150.0	120.0	150.0	120.0	150.0	120.0	150.0
37"	55-1/2"		91.6	91.6	91.6	91.6	120.0	137.5	120.0	150.0	120.0	150.0	120.0	150.0
53-1/8"	79-11/16"		68.2	68.2	68.2	68.2	100.0	100.0	120.0	120.0	120.0	120.0	120.0	120.0
74"	111"		53.7	53.7	53.7	53.7	80.6	80.6	107.5	107.5	103.9	103.9	107.5	107.5
26-1/2"	39-3/4"	76"	115.7	115.7	115.7	115.7	120.0	150.0	120.0	150.0	120.0	150.0	120.0	150.0
37"	55-1/2"		86.1	86.1	86.1	86.1	120.0	129.2	120.0	150.0	120.0	150.0	120.0	150.0
53-1/8"	79-11/16"		63.9	63.9	63.9	63.9	95.8	95.8	120.0	120.0	120.0	120.0	120.0	120.0
74"	111"		50.0	50.0	50.0	50.0	75.0	75.0	100.0	100.0	98.8	98.8	100.0	100.0

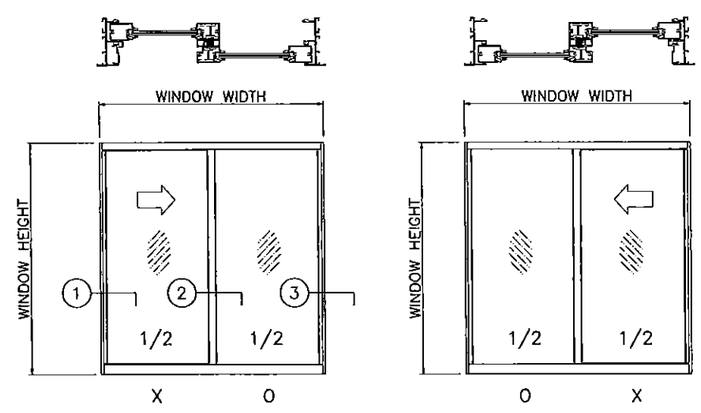

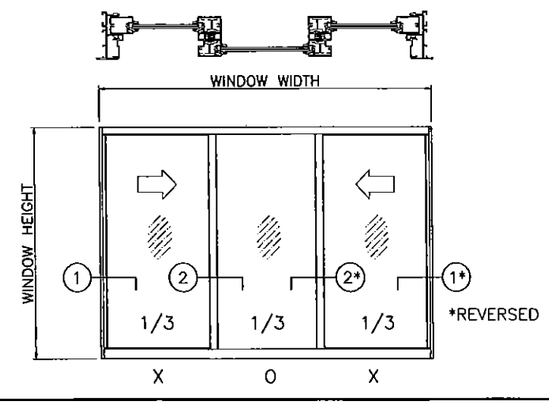

PERFORMANCE VALUES
EQUAL PANELS

PRODUCT REVISED
as complying with the Florida
Building Code
Acceptance No 15-0512.03
Expiration Date 06/10/2019
By Manuel Sera
Miami Dade Product Control
All values shown are Design PSF (Pounds per Square Foot)

VALUES FOR EXTERIOR LOADS(+) SHOWN ARE
FOR SILL WITH WATERBAR ADAPTER
FOR WINDOWS WITHOUT WATERBAR ADAPTER
LIMIT EXTERIOR(+) LOADS TO 80.0 PSF

NOTE:
GLASS CAPACITIES ON THIS SHEET ARE
BASED ON ASTM E1300-09 (3 SEC. GUSTS)
AND FLORIDA BUILDING COMMISSION
DECLARATORY STATEMENT DCA05-DEC-219

MAXIMUM VENT SIZE IS 18.7 SQ. FT.
AND MAXIMUM VENT HEIGHT IS 71 11/16"

Engr: JAVAD AHMAD
CIVIL
FLA. PE # 70592
C.A.N. 3538

AUG 07 2015

AL-FAROOQ CORPORATION
ENGINEERS & PRODUCT DEVELOPMENT
1235 S.W. 87 AVE
MIAMI, FLORIDA 33174
TEL (305) 264-8100 FAX. (305) 262-6978

COMP-ANL\W09-13CGI

SERIES-375 ALUM. HORIZ. ROLLING WDW. (L.M.I.)

CGI WINDOWS & DOORS
10100 N.W. 25TH STREET
DORAL, FL. 33172
TEL. (305) 593-6590 FAX. (305) 593-6592

revisions:

no	date	by	description
A	01.06.12		NO CHANGE THIS SHEET
B	02.10.14		NO CHANGE THIS SHEET
C	05.28.14		REV. PER RER COMMENTS
D	05.05.15		NO CHANGE THIS SHEET
E	08.04.15		NO CHANGE THIS SHEET

date: 02-27-09
scale: -
dr. by: -
chk. by:

drawing no.
W09-13

WINDOW DIMS.			ANCHORS TYPE 'A'	ANCHORS TYPE 'B'	ANCHORS TYPE 'C'
WIDTH		HEIGHT	EXT. (+)	EXT. (+)	EXT. (+)
2 PANEL	3 PANEL		INT. (−)	INT. (−)	INT. (−)
36"	54"	36"	150.0	150.0	150.0
42"	63"		150.0	150.0	150.0
48"	72"		150.0	150.0	150.0
54"	81"		144.6	150.0	150.0
60"	90"		130.1	150.0	150.0
66"	99"		118.3	150.0	150.0
72"	108"		108.4	150.0	150.0
78"	117"		100.1	150.0	150.0
84"	126"		93.0	150.0	150.0
36"	54"	48"	150.0	150.0	150.0
42"	63"		139.4	150.0	150.0
48"	72"		122.0	150.0	150.0
54"	81"		108.4	150.0	150.0
60"	90"		97.6	150.0	150.0
66"	99"		88.7	150.0	150.0
72"	108"		81.3	150.0	150.0
78"	117"		75.1	120.0	120.0
84"	126"		69.7	120.0	120.0
36"	54"	54"	144.6	150.0	150.0
42"	63"		123.9	150.0	150.0
48"	72"		108.4	150.0	150.0
54"	81"		96.4	150.0	150.0
60"	90"		86.8	150.0	150.0
66"	99"		78.9	150.0	150.0
72"	108"		72.3	120.0	120.0
78"	117"		66.7	120.0	120.0
84"	126"		62.0	120.0	120.0
36"	54"	60"	130.1	150.0	150.0
42"	63"		111.5	150.0	150.0
48"	72"		97.6	150.0	150.0
54"	81"		86.8	150.0	150.0
60"	90"		78.1	150.0	150.0
66"	99"		71.0	120.0	120.0
72"	108"		65.1	120.0	120.0
78"	117"		60.1	120.0	120.0
84"	126"		55.8	111.5	120.0
36"	54"	66"	118.3	150.0	150.0
42"	63"		101.4	150.0	150.0
48"	72"		88.7	150.0	150.0
54"	81"		78.9	150.0	150.0
60"	90"		71.0	120.0	120.0
66"	99"		64.5	120.0	120.0
72"	108"		59.2	118.3	120.0
78"	117"		54.6	109.2	120.0
84"	126"		50.7	101.4	120.0
36"	54"	72"	108.4	150.0	150.0
42"	63"		93.0	150.0	150.0
48"	72"		81.3	150.0	150.0
54"	81"		72.3	120.0	120.0
60"	90"		65.1	120.0	120.0
66"	99"		59.2	118.3	120.0
72"	108"		54.2	108.4	120.0
78"	117"		50.1	100.1	120.0
36"	54"	76"	102.7	150.0	150.0
42"	63"		88.1	150.0	150.0
48"	72"		77.1	120.0	120.0
54"	81"		68.5	120.0	120.0
60"	90"		61.6	120.0	120.0
66"	99"		56.0	112.1	120.0
72"	108"		51.4	102.7	120.0

WINDOW DIMS.			ANCHORS TYPE 'A'	ANCHORS TYPE 'B'	ANCHORS TYPE 'C'
WIDTH		HEIGHT	EXT. (+)	EXT. (+)	EXT. (+)
2 PANEL	3 PANEL		INT. (−)	INT. (−)	INT. (−)
26-1/2"	39-3/4"	38-3/8"	150.0	150.0	150.0
37"	55-1/2"		150.0	150.0	150.0
53-1/8"	79-11/16"		137.9	150.0	150.0
74"	111"		99.0	150.0	150.0
79-1/2"	119-1/4"		92.1	150.0	150.0
106-1/4"	159-3/8"		68.9	120.0	120.0
26-1/2"	39-3/4"	50-5/8"	150.0	150.0	150.0
37"	55-1/2"		150.0	150.0	150.0
53-1/8"	79-11/16"		104.5	150.0	150.0
74"	111"		75.0	120.0	120.0
79-1/2"	119-1/4"		69.8	120.0	120.0
106-1/4"	159-3/8"		52.3	104.5	120.0
26-1/2"	39-3/4"	63"	150.0	150.0	150.0
37"	55-1/2"		120.6	150.0	150.0
53-1/8"	79-11/16"		84.0	150.0	150.0
74"	111"		60.3	120.0	120.0
79-1/2"	119-1/4"		56.1	112.2	120.0
26-1/2"	39-3/4"	72"	147.3	150.0	150.0
37"	55-1/2"		105.5	150.0	150.0
53-1/8"	79-11/16"		73.5	120.0	120.0
74"	111"		52.8	105.5	120.0
26-1/2"	39-3/4"	76"	139.6	150.0	150.0
37"	55-1/2"		100.0	150.0	150.0
53-1/8"	79-11/16"		69.6	120.0	120.0
74"	111"		50.0	100.0	120.0

ALL VALUES SHOWN ARE DESIGN PSF
VALUES FOR EXT.(+) LOADS SHOWN ARE FOR SILL WITH WATERBAR ADAPTER.
FOR WINDOWS WITHOUT WATERBAR ADAPTER LIMIT EXT.(+) LOADS TO 80.0 PSF

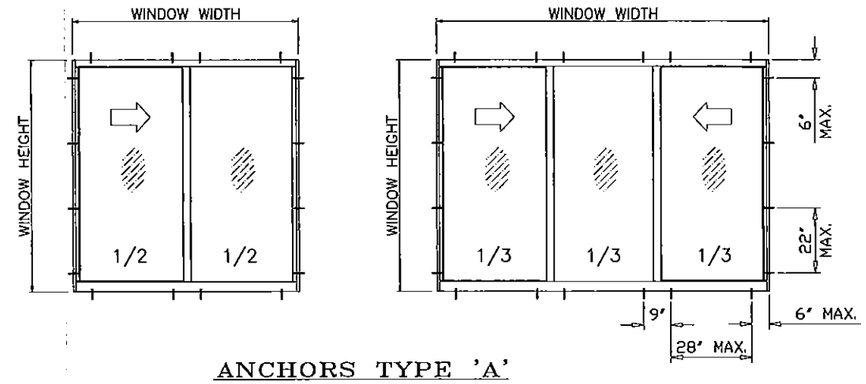

ANCHORS TYPE 'A'

2 ANCHORS AT MTG. STILE ENDS
28" MAX. SPACING BETWEEN ANCHORS
LIMIT MAX. DESIGN LOADS TO 55 PSF

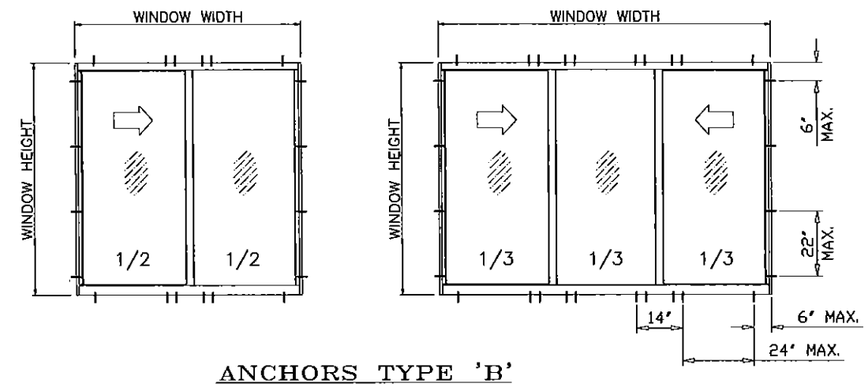

ANCHORS TYPE 'B'

4 ANCHORS AT MTG. STILE ENDS
24" MAX. SPACING BETWEEN ANCHORS
LIMIT MAX. DESIGN LOADS TO 100 PSF

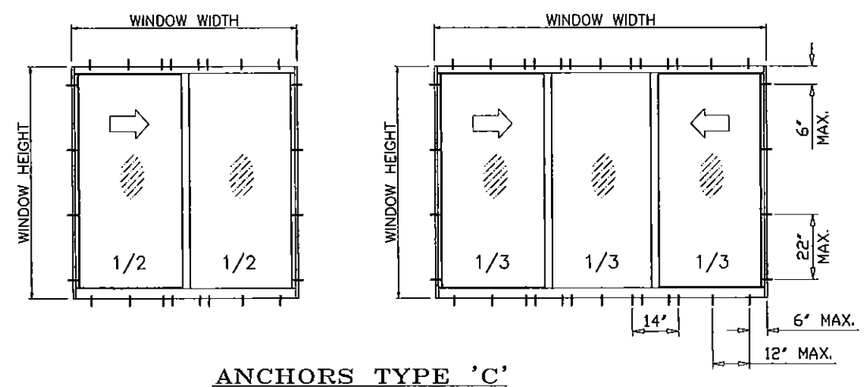

ANCHORS TYPE 'C'

4 ANCHORS AT MTG. STILE ENDS
12" MAX. SPACING BETWEEN ANCHORS
LIMIT MAX. DESIGN LOADS TO 150 PSF

PRODUCT REVISED
as complying with the Florida
Building Code
Acceptance No 15-0512.03
Expiration Date 06/10/2019
By Manuel Perez
Miami Dade Product Control

Engr: JAVAD AHMAD
CIVIL
FLA. PE # 70592
C.A.N. 3538

AUG 07 2015

NOTE:
ANCHOR SPACING TO BE AS LISTED ABOVE
1/2" MAX. SHIM SPACE FOR EQUAL LEG FRAMES ONLY

AL-FAROOQ CORPORATION
ENGINEERS & PRODUCT DEVELOPMENT
1235 S.W. 87 AVE
MIAMI, FLORIDA 33174
TEL. (305) 264-8100 FAX. (305) 262-6978

COMP-ANL\W09-13CGI

SERIES-375 ALUM. HORIZ. ROLLING WDW. (L.M.I.)

CGI WINDOWS & DOORS
10100 N.W. 25TH STREET
DORAL, FL. 33172
TEL. (305) 593-6590 FAX. (305) 593-6592

revisions:

no	date	by	description
A	01.06.12		NO CHANGE THIS SHEET
B	02.10.14		NO CHANGE THIS SHEET
C	05.28.14		REV. PER RER COMMENTS
D	05.05.15		NO CHANGE THIS SHEET
E	08.04.15		NO CHANGE THIS SHEET

date: 02-27-09
scale: -
dr. by: -
chk. by:

drawing no.
W09-13

WINDOW DIMS.			ANCHORS TYPE 'A'	ANCHORS TYPE 'B'	ANCHORS TYPE 'C'
WIDTH		HEIGHT	EXT. (+)	EXT. (+)	EXT. (+)
2 PANEL	3 PANEL		INT. (−)	INT. (−)	INT. (−)
36"	54"	36"	150.0	150.0	150.0
42"	63"		150.0	150.0	150.0
48"	72"		150.0	150.0	150.0
54"	81"		143.4	150.0	150.0
60"	90"		129.1	150.0	150.0
66"	99"		117.3	150.0	150.0
72"	108"		107.6	150.0	150.0
78"	117"		99.3	150.0	150.0
84"	126"		92.2	150.0	150.0
36"	54"	48"	150.0	150.0	150.0
42"	63"		138.3	150.0	150.0
48"	72"		121.0	150.0	150.0
54"	81"		107.6	150.0	150.0
60"	90"		96.8	150.0	150.0
66"	99"		88.0	150.0	150.0
72"	108"		80.7	150.0	150.0
78"	117"		74.5	120.0	120.0
84"	126"		69.1	120.0	120.0
36"	54"	54"	143.4	150.0	150.0
42"	63"		122.9	150.0	150.0
48"	72"		107.6	150.0	150.0
54"	81"		95.6	150.0	150.0
60"	90"		86.0	150.0	150.0
66"	99"		78.2	150.0	150.0
72"	108"		71.7	120.0	120.0
78"	117"		66.2	120.0	120.0
84"	126"		61.5	120.0	120.0
36"	54"	60"	129.1	150.0	150.0
42"	63"		110.6	150.0	150.0
48"	72"		96.8	150.0	150.0
54"	81"		86.0	150.0	150.0
60"	90"		77.4	150.0	150.0
66"	99"		70.4	120.0	120.0
72"	108"		64.5	120.0	120.0
78"	117"		59.6	119.1	120.0
84"	126"		55.3	110.6	120.0
36"	54"	66"	117.3	150.0	150.0
42"	63"		100.6	150.0	150.0
48"	72"		88.0	150.0	150.0
54"	81"		78.2	150.0	150.0
60"	90"		70.4	120.0	120.0
66"	99"		64.0	120.0	120.0
72"	108"		58.7	117.3	120.0
78"	117"		54.2	108.3	120.0
84"	126"		50.3	100.6	120.0
36"	54"	72"	107.6	150.0	150.0
42"	63"		92.2	150.0	150.0
48"	72"		80.7	150.0	150.0
54"	81"		71.7	120.0	120.0
60"	90"		64.5	120.0	120.0
66"	99"		58.7	117.3	120.0
72"	108"		53.8	107.6	120.0
78"	117"		49.6	99.3	120.0
36"	54"	76"	101.9	150.0	150.0
42"	63"		87.3	150.0	150.0
48"	72"		76.4	120.0	120.0
54"	81"		67.9	120.0	120.0
60"	90"		61.1	120.0	120.0
66"	99"		55.6	111.2	120.0
72"	108"		50.9	101.9	120.0

WINDOW DIMS.			ANCHORS TYPE 'A'	ANCHORS TYPE 'B'	ANCHORS TYPE 'C'
WIDTH		HEIGHT	EXT. (+)	EXT. (+)	EXT. (+)
2 PANEL	3 PANEL		INT. (−)	INT. (−)	INT. (−)
26−1/2"	39−3/4"	38−3/8"	150.0	150.0	150.0
37"	55−1/2"		150.0	150.0	150.0
53−1/8"	79−11/16"		136.7	150.0	150.0
74"	111"		98.2	150.0	150.0
79−1/2"	119−1/4"		91.2	150.0	150.0
106−1/4"	159−3/8"		68.4	120.0	120.0
26−1/2"	39−3/4"	50−5/8"	150.0	150.0	150.0
37"	55−1/2"		148.8	150.0	150.0
53−1/8"	79−11/16"		103.7	150.0	150.0
74"	111"		74.4	120.0	120.0
79−1/2"	119−1/4"		69.1	120.0	120.0
106−1/4"	159−3/8"		51.8	103.7	120.0
26−1/2"	39−3/4"	63"	150.0	150.0	150.0
37"	55−1/2"		119.6	150.0	150.0
53−1/8"	79−11/16"		83.3	150.0	150.0
74"	111"		59.8	119.6	120.0
79−1/2"	119−1/4"		55.5	111.1	120.0
26−1/2"	39−3/4"	72"	146.1	150.0	150.0
37"	55−1/2"		104.6	150.0	150.0
53−1/8"	79−11/16"		72.9	120.0	120.0
74"	111"		52.3	104.6	120.0
26−1/2"	39−3/4"	76"	138.4	150.0	150.0
37"	55−1/2"		99.1	150.0	150.0
53−1/8"	79−11/16"		69.0	120.0	120.0
74"	111"		49.6	99.1	120.0

ALL VALUES SHOWN ARE DESIGN PSF
VALUES FOR EXT.(+) LOADS SHOWN ARE FOR SILL WITH WATERBAR ADAPTER.
FOR WINDOWS WITHOUT WATERBAR ADAPTER LIMIT EXT.(+) LOADS TO 80.0 PSF

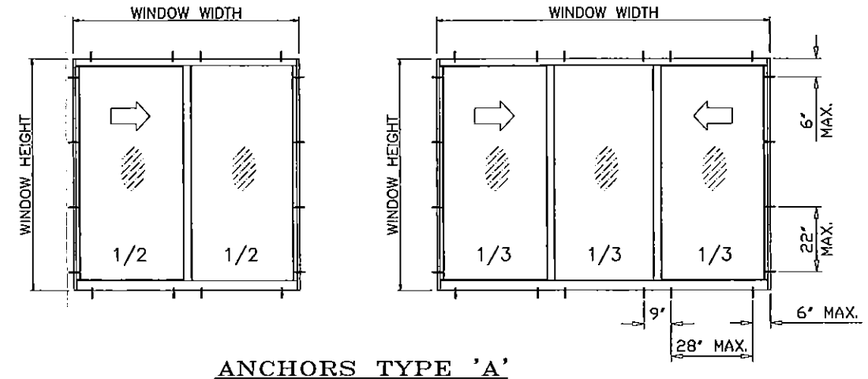

ANCHORS TYPE 'A'

2 ANCHORS AT MTG. STILE ENDS
28" MAX. SPACING BETWEEN ANCHORS
LIMIT MAX. DESIGN LOADS TO 55 PSF

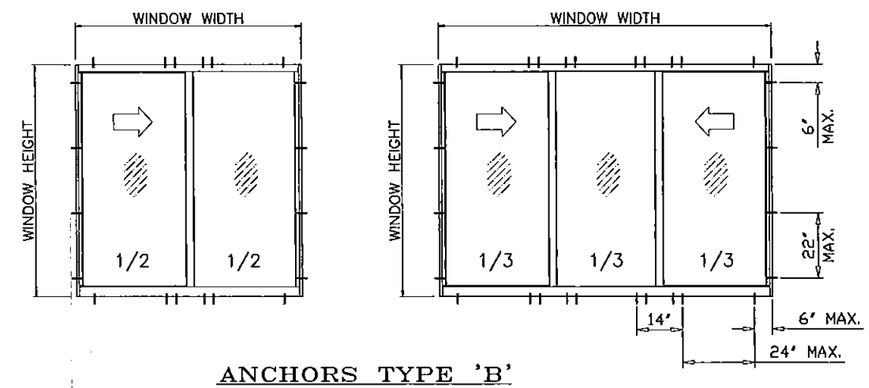

ANCHORS TYPE 'B'

4 ANCHORS AT MTG. STILE ENDS
24" MAX. SPACING BETWEEN ANCHORS
LIMIT MAX. DESIGN LOADS TO 100 PSF

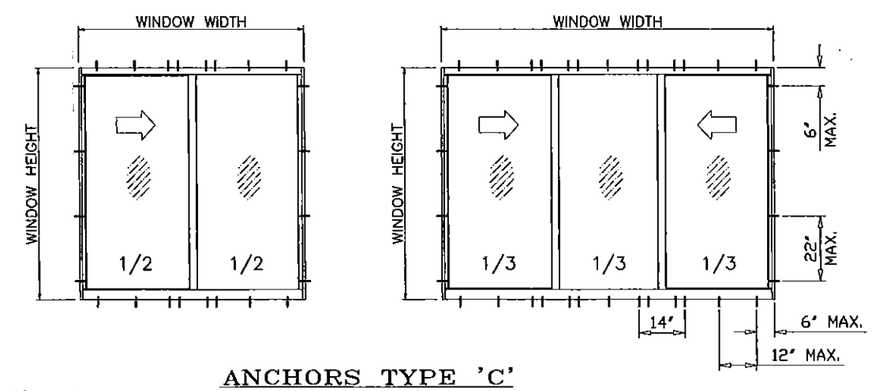

ANCHORS TYPE 'C'

4 ANCHORS AT MTG. STILE ENDS
12" MAX. SPACING BETWEEN ANCHORS
LIMIT MAX. DESIGN LOADS TO 150 PSF

PRODUCT REVISED
as complying with the Florida
Building Code
Acceptance No 15-0512.03
Expiration Date 06/10/2019
By Manuel Perez
Miami Dade Product Control

NOTE:
ANCHOR SPACING TO BE AS LISTED ABOVE
3/8" MAX. SHIM SPACE FOR FLANGE AND EQUAL LEG FRAMES

1/4" MAX. SHIM SPACE FOR INSTALLATIONS INTO METAL STRUCTURES

Engr: JAVAD AHMAD
CIVIL
FLA. PE # 70592
C.A.N. 3538

AUG 07 2015

AL-FAROOQ CORPORATION
ENGINEERS & PRODUCT DEVELOPMENT
1235 S.W. 87 AVE
MIAMI, FLORIDA 33174
TEL (305) 264-8100 FAX. (305) 262-6978

COMP-ANL\W09-13CGI

SERIES-375 ALUM. HORIZ. ROLLING WDW. (L.M.I.)

CGI WINDOWS & DOORS
10100 N.W. 25TH STREET
DORAL, FL. 33172
TEL. (305) 593-6590 FAX. (305) 593-6592

revisions:

no	date	by	description
A	01.06.12		CHART REV.
B	02.10.14		NO CHANGE THIS SHEET
C	05.28.14		REV. PER RER COMMENTS
D	05.05.15		NO CHANGE THIS SHEET
E	08.04.15		NO CHANGE THIS SHEET

date: 02-27-09
scale: –
dr. by: –
chk. by:

drawing no.
W09-13

sheet 6.1 of 16

WINDOW DIMS.			INTERLOCKS WITHOUT REINFORCING						INTERLOCKS WITH REINFORCING					
WIDTH		HEIGHT	GLASS TYPE 1		GLASS TYPE 4		GLASS TYPES 2, 3 & 5		GLASS TYPE 2		GLASS TYPE 3		GLASS TYPE 5	
2 PANEL	3 PANEL		EXT.(+)	INT.(−)	EXT.(+)	INT.(−)	EXT.(+)	INT.(−)	EXT.(+)	INT.(−)	EXT.(+)	INT.(−)	EXT.(+)	INT.(−)
36"	48"	36"	120.0	150.0	120.0	150.0	120.0	150.0	120.0	150.0	120.0	150.0	120.0	150.0
42"	56"		120.0	150.0	120.0	150.0	120.0	150.0	120.0	150.0	120.0	150.0	120.0	150.0
48"	64"		120.0	150.0	120.0	150.0	120.0	150.0	120.0	150.0	120.0	150.0	120.0	150.0
54"	72"		120.0	150.0	120.0	150.0	120.0	150.0	120.0	150.0	120.0	150.0	120.0	150.0
60"	80"		120.0	135.3	120.0	150.0	120.0	150.0	120.0	150.0	120.0	150.0	120.0	150.0
66"	88"		118.4	118.4	120.0	132.0	120.0	150.0	120.0	150.0	120.0	150.0	120.0	150.0
72"	96"		104.5	104.5	116.6	116.6	120.0	150.0	120.0	150.0	120.0	150.0	120.0	150.0
78"	104"		85.0	85.0	85.0	85.0	100.0	100.0	120.0	120.0	120.0	120.0	120.0	120.0
84"	112"		83.8	83.8	85.0	85.0	100.0	100.0	120.0	120.0	120.0	120.0	120.0	120.0
96"	128"		71.9	71.9	80.2	80.2	100.0	100.0	120.0	120.0	120.0	120.0	120.0	120.0
108"	144"		61.5	61.5	68.6	68.6	100.0	100.0	120.0	120.0	120.0	120.0	120.0	120.0
36"	48"	48"	120.0	150.0	120.0	150.0	120.0	150.0	120.0	150.0	120.0	150.0	120.0	150.0
42"	56"		120.0	130.6	120.0	139.4	120.0	150.0	120.0	150.0	120.0	150.0	120.0	150.0
48"	64"		116.1	116.1	120.0	127.9	120.0	150.0	120.0	150.0	120.0	150.0	120.0	150.0
54"	72"		105.6	105.6	117.7	117.7	120.0	150.0	120.0	150.0	120.0	150.0	120.0	150.0
60"	80"		85.0	85.0	85.0	85.0	100.0	100.0	120.0	120.0	120.0	120.0	120.0	120.0
66"	88"		83.9	83.9	85.0	85.0	100.0	100.0	120.0	120.0	120.0	120.0	120.0	120.0
72"	96"		77.6	77.6	85.0	85.0	100.0	100.0	120.0	120.0	120.0	120.0	120.0	120.0
78"	104"		72.4	72.4	80.8	80.8	100.0	100.0	120.0	120.0	118.4	118.4	120.0	120.0
84"	112"		67.5	67.5	75.3	75.3	100.0	100.0	120.0	120.0	110.4	110.4	120.0	120.0
36"	48"	54"	120.0	134.3	120.0	134.3	120.0	150.0	120.0	150.0	120.0	150.0	120.0	150.0
42"	56"		111.5	111.5	119.7	119.7	120.0	150.0	120.0	150.0	120.0	150.0	120.0	150.0
48"	64"		97.5	97.5	108.7	108.7	120.0	150.0	120.0	150.0	120.0	150.0	120.0	150.0
54"	72"		85.0	85.0	85.0	85.0	100.0	100.0	120.0	120.0	120.0	120.0	120.0	120.0
60"	80"		80.1	80.1	85.0	85.0	100.0	100.0	120.0	120.0	120.0	120.0	120.0	120.0
66"	88"		74.7	74.7	83.3	83.3	100.0	100.0	120.0	120.0	120.0	120.0	120.0	120.0
72"	96"		70.0	70.0	78.1	78.1	100.0	100.0	120.0	120.0	114.5	114.5	120.0	120.0
78"	104"		65.6	65.6	73.2	73.2	100.0	100.0	120.0	120.0	107.9	107.9	120.0	120.0
36"	48"	60"	118.2	118.2	118.2	118.2	120.0	150.0	120.0	150.0	120.0	150.0	120.0	150.0
42"	56"		98.7	98.7	104.8	104.8	120.0	150.0	120.0	150.0	120.0	150.0	120.0	150.0
48"	64"		84.0	84.0	85.0	85.0	100.0	100.0	120.0	120.0	120.0	120.0	120.0	120.0
54"	72"		76.9	76.9	85.0	85.0	100.0	100.0	120.0	120.0	120.0	120.0	120.0	120.0
60"	80"		70.5	70.5	78.6	78.6	100.0	100.0	120.0	120.0	120.0	120.0	120.0	120.0
66"	88"		66.4	66.4	74.1	74.1	100.0	100.0	120.0	120.0	110.6	110.6	120.0	120.0
36"	48"	66"	105.5	105.5	105.5	105.5	120.0	150.0	120.0	150.0	120.0	150.0	120.0	150.0
42"	56"		85.0	85.0	85.0	85.0	100.0	100.0	120.0	120.0	120.0	120.0	120.0	120.0
48"	64"		77.5	77.5	84.2	84.2	100.0	100.0	120.0	120.0	120.0	120.0	120.0	120.0
54"	72"		68.3	68.3	76.2	76.2	100.0	100.0	120.0	120.0	120.0	120.0	120.0	120.0
60"	80"		62.3	62.3	69.5	69.5	100.0	100.0	120.0	120.0	110.2	110.2	120.0	120.0
36"	48"	72"	95.3	95.3	95.3	95.3	120.0	143.0	120.0	150.0	120.0	150.0	120.0	150.0
42"	56"		80.1	80.1	84.0	84.0	100.0	100.0	120.0	120.0	120.0	120.0	120.0	120.0
48"	64"		69.4	69.4	75.6	75.6	100.0	100.0	120.0	120.0	120.0	120.0	120.0	120.0
54"	72"		60.8	60.8	67.8	67.8	100.0	100.0	120.0	120.0	116.7	116.7	120.0	120.0
36"	48"	76"	85.0	85.0	85.0	85.0	100.0	100.0	120.0	120.0	120.0	120.0	120.0	120.0
42"	56"		78.7	78.7	78.7	78.7	100.0	100.0	120.0	120.0	120.0	120.0	120.0	120.0
48"	64"		65.0	65.0	70.7	70.7	100.0	100.0	120.0	120.0	120.0	120.0	120.0	120.0
54"	72"		56.6	56.6	63.1	63.1	96.9	96.9	113.1	113.1	112.0	112.0	120.0	120.0

WINDOW DIMS.			INTERLOCKS WITHOUT REINFORCING						INTERLOCKS WITH REINFORCING					
WIDTH		HEIGHT	GLASS TYPE 1		GLASS TYPE 4		GLASS TYPES 2, 3 & 5		GLASS TYPE 2		GLASS TYPE 3		GLASS TYPE 5	
2 PANEL	3 PANEL		EXT.(+)	INT.(−)	EXT.(+)	INT.(−)	EXT.(+)	INT.(−)	EXT.(+)	INT.(−)	EXT.(+)	INT.(−)	EXT.(+)	INT.(−)
26-1/2"	35-5/16"	38-3/8"	120.0	150.0	120.0	150.0	120.0	150.0	120.0	150.0	120.0	150.0	120.0	150.0
37"	49-5/16"		120.0	150.0	120.0	150.0	120.0	150.0	120.0	150.0	120.0	150.0	120.0	150.0
53-1/8"	71"		120.0	147.2	120.0	150.0	120.0	150.0	120.0	150.0	120.0	150.0	120.0	150.0
74"	99"		85.0	85.0	85.0	85.0	100.0	100.0	120.0	120.0	120.0	120.0	120.0	120.0
79-1/2"	106"		84.6	84.6	85.0	85.0	100.0	100.0	120.0	120.0	120.0	120.0	120.0	120.0
106-1/4"	142"		58.8	58.8	65.5	65.5	100.0	100.0	117.5	117.5	111.0	111.0	120.0	120.0
26-1/2"	35-5/16"	50-5/8"	120.0	150.0	120.0	150.0	120.0	150.0	120.0	150.0	120.0	150.0	120.0	150.0
37"	49-5/16"		120.0	142.5	120.0	142.5	120.0	150.0	120.0	150.0	120.0	150.0	120.0	150.0
53-1/8"	71"		98.8	98.8	110.2	110.2	120.0	150.0	120.0	150.0	120.0	150.0	120.0	150.0
74"	99"		72.0	72.0	80.3	80.3	100.0	100.0	120.0	120.0	119.0	119.0	120.0	120.0
79-1/2"	106"		68.2	68.2	76.1	76.1	100.0	100.0	120.0	120.0	111.7	111.7	120.0	120.0
26-1/2"	35-5/16"	63"	120.0	144.3	120.0	144.3	120.0	150.0	120.0	150.0	120.0	150.0	120.0	150.0
37"	49-5/16"		109.1	109.1	109.1	109.1	120.0	150.0	120.0	150.0	120.0	150.0	120.0	150.0
53-1/8"	71"		73.4	73.4	81.9	81.9	100.0	100.0	120.0	120.0	120.0	120.0	120.0	120.0
26-1/2"	35-5/16"	72"	120.0	124.2	120.0	124.2	120.0	150.0	120.0	150.0	120.0	150.0	120.0	150.0
37"	49-5/16"		93.2	93.2	93.2	93.2	120.0	139.7	120.0	150.0	120.0	150.0	120.0	150.0
53-1/8"	71"		61.6	61.6	68.7	68.7	100.0	100.0	120.0	120.0	119.4	119.4	120.0	120.0
26-1/2"	35-5/16"	76"	117.0	117.0	117.0	117.0	120.0	150.0	120.0	150.0	120.0	150.0	120.0	150.0
37"	49-5/16"		85.0	85.0	85.0	85.0	100.0	100.0	120.0	120.0	120.0	120.0	120.0	120.0
53-1/8"	71"		57.4	57.4	64.0	64.0	97.9	97.9	114.7	114.7	114.7	114.7	120.0	120.0

PERFORMANCE VALUES
UNEQUAL PANELS

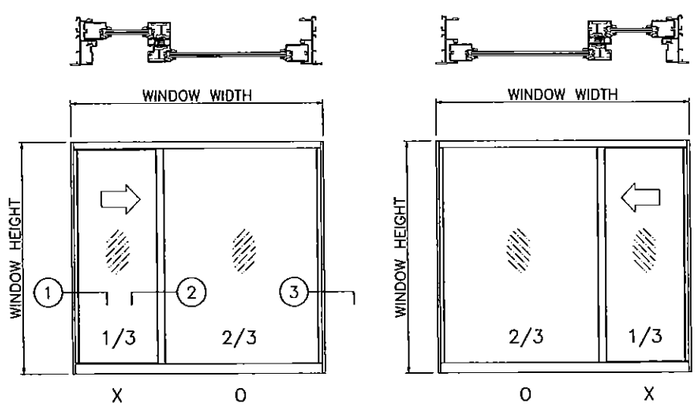

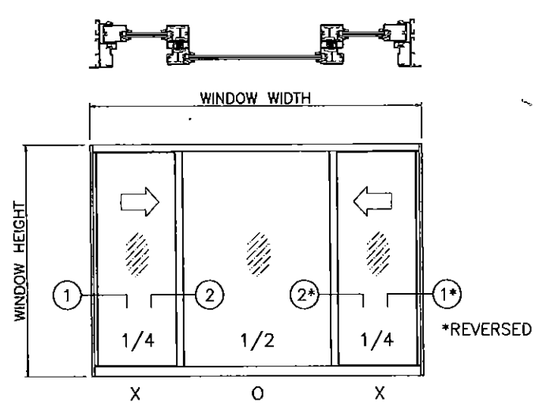

By complying with the Florida Building Code Acceptance No 15-0512.03 Expiration Date 06/10/2019
By Manuel Perez Miami-Dade Product Control

All values shown are Design PSF (Pounds per Square Foot)

VALUES FOR EXTERIOR LOADS(+) SHOWN ARE
FOR SILL WITH WATERBAR ADAPTER
FOR WINDOWS WITHOUT WATERBAR ADAPTER
LIMIT EXTERIOR(+) LOADS TO 80.0 PSF

NOTE:
GLASS CAPACITIES ON THIS SHEET ARE BASED ON ASTM E1300-09 (3 SEC. GUSTS) AND FLORIDA BUILDING COMMISSION DECLARATORY STATEMENT DCA05-DEC-219

MAXIMUM VENT SIZE IS 18.7 SQ. FT.
AND MAXIMUM VENT HEIGHT IS 71 11/16"

Engr: JAVAD AHMAD
CIVIL
FLA. PE # 70592
C.A.N. 3538
AUG 0 8 2015

AL-FAROOQ CORPORATION
ENGINEERS & PRODUCT DEVELOPMENT
1235 S.W. 87 AVE
MIAMI, FLORIDA 33174
TEL. (305) 264-8100 FAX. (305) 262-6978

COMP-ANL\W09-13CGI

SERIES-375 ALUM. HORIZ. ROLLING WDW. (L.M.I.)

CGI WINDOWS & DOORS
10100 N.W. 25TH STREET
DORAL, FL. 33172
TEL. (305) 593-6590 FAX. (305) 593-6592

revisions:

no	date	by	description
A	01.06.12		NO CHANGE THIS SHEET
B	02.10.14		NO CHANGE THIS SHEET
C	05.28.14		REV. PER RER COMMENTS
D	05.05.15		NO CHANGE THIS SHEET
E	08.04.15		NO CHANGE THIS SHEET

date: 02-27-09
scale: -
dr. by: -
chk. by:

drawing no.
W09-13

WINDOW DIMS.			ANCHORS TYPE 'A'	ANCHORS TYPE 'B'
WIDTH		HEIGHT	EXT. (+)	EXT. (+)
2 PANEL	3 PANEL		INT. (−)	INT. (−)
36"	48"	36"	150.0	150.0
42"	56"		150.0	150.0
48"	64"		150.0	150.0
54"	72"		144.6	150.0
60"	80"		130.1	150.0
66"	88"		118.3	150.0
72"	96"		108.4	150.0
78"	104"		100.1	120.0
84"	112"		93.0	120.0
96"	128"		81.3	120.0
108"	144"		72.3	120.0
36"	48"	48"	150.0	150.0
42"	56"		139.4	150.0
48"	64"		122.0	150.0
54"	72"		108.4	150.0
60"	80"		97.6	120.0
66"	88"		88.7	120.0
72"	96"		81.3	120.0
78"	104"		75.1	120.0
84"	112"		69.7	120.0
36"	48"	54"	144.6	150.0
42"	56"		123.9	150.0
48"	64"		108.4	150.0
54"	72"		96.4	120.0
60"	80"		86.8	120.0
66"	88"		78.9	120.0
72"	96"		72.3	120.0
78"	104"		66.7	120.0
36"	48"	60"	130.1	150.0
42"	56"		111.5	150.0
48"	64"		97.6	120.0
54"	72"		86.8	120.0
60"	80"		78.1	120.0
66"	88"		71.0	120.0
36"	48"	66"	118.3	150.0
42"	56"		101.4	120.0
48"	64"		88.7	120.0
54"	72"		78.9	120.0
60"	80"		71.0	120.0
36"	48"	72"	108.4	150.0
42"	56"		93.0	120.0
48"	64"		81.3	120.0
54"	72"		72.3	120.0
36"	48"	76"	102.7	120.0
42"	56"		88.1	120.0
48"	64"		77.1	120.0
54"	72"		68.5	120.0

WINDOW DIMS.			ANCHORS TYPE 'A'	ANCHORS TYPE 'B'
WIDTH		HEIGHT	EXT. (+)	EXT. (+)
2 PANEL	3 PANEL		INT. (−)	INT. (−)
26-1/2"	35-5/16"	38-3/8"	150.0	150.0
37"	49-5/16"		150.0	150.0
53-1/8"	71"		137.6	150.0
74"	99"		98.7	120.0
79-1/2"	106"		92.1	120.0
106-1/4"	142"		68.8	120.0
26-1/2"	35-5/16"	50-5/8"	150.0	150.0
37"	49-5/16"		150.0	150.0
53-1/8"	71"		104.3	150.0
74"	99"		74.8	120.0
79-1/2"	106"		69.8	120.0
26-1/2"	35-5/16"	63"	150.0	150.0
37"	49-5/16"		120.6	150.0
53-1/8"	71"		83.8	120.0
26-1/2"	35-5/16"	72"	147.3	150.0
37"	49-5/16"		105.5	150.0
53-1/8"	71"		73.3	120.0
26-1/2"	35-5/16"	76"	139.6	150.0
37"	49-5/16"		100.0	120.0
53-1/8"	71"		69.5	120.0

ALL VALUES SHOWN ARE DESIGN PSF
VALUES FOR EXT.(+) LOADS SHOWN ARE FOR SILL WITH WATERBAR ADAPTER.
FOR WINDOWS WITHOUT WATERBAR ADAPTER LIMIT EXT.(+) LOADS TO 80.0 PSF

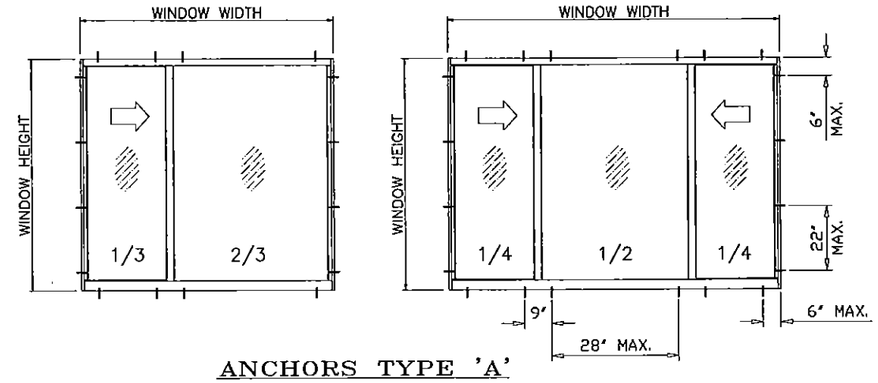

ANCHORS TYPE 'A'

2 ANCHORS AT MTG. STILE ENDS
28" MAX. SPACING BETWEEN ANCHORS
LIMIT MAX. DESIGN LOADS TO 55 PSF

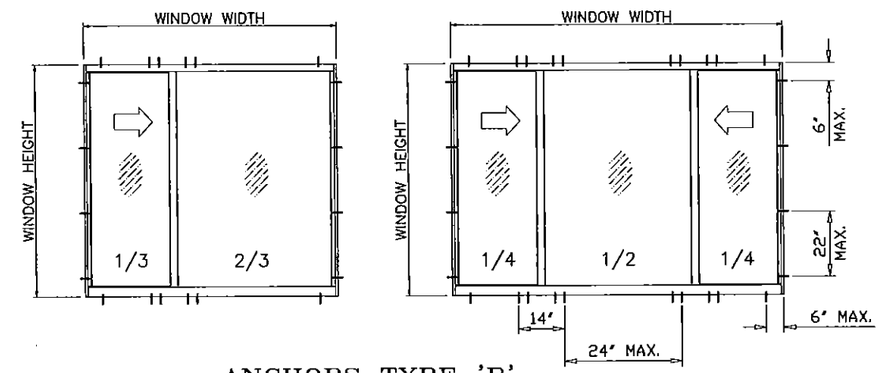

ANCHORS TYPE 'B'

4 ANCHORS AT MTG. STILE ENDS
24" MAX. SPACING BETWEEN ANCHORS
LIMIT MAX. DESIGN LOADS TO 100 PSF

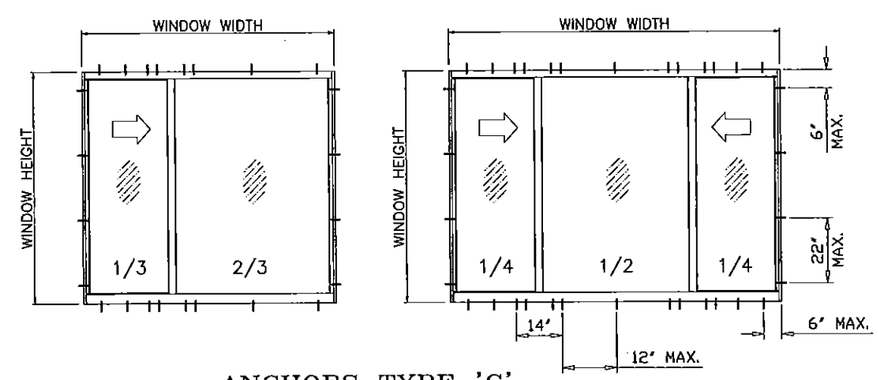

ANCHORS TYPE 'C'

4 ANCHORS AT MTG. STILE ENDS
12" MAX. SPACING BETWEEN ANCHORS
LIMIT MAX. DESIGN LOADS TO 150 PSF

PRODUCT REVISED
as complying with the Florida
Building Code
Acceptance No 15-0512.03
Expiration Date 06/10/2019
By Manuel Perez
Miami Dade Product Control

Engr: JAVAD AHMAD
CIVIL
FLA. PE # 70592
C.A.N. 3538
AUG 07 2015

NOTE:
ANCHOR SPACING TO BE AS LISTED ABOVE
1/2" MAX. SHIM SPACE FOR EQUAL LEG FRAMES ONLY

AL-FAROOQ CORPORATION
ENGINEERS & PRODUCT DEVELOPMENT
1235 S.W. 87 AVE
MIAMI, FLORIDA 33174
TEL (305) 264-8100 FAX. (305) 262-6978

COMP-ANL\W09-13CGI

SERIES-375 ALUM. HORIZ. ROLLING WDW. (L.M.I.)

CGI WINDOWS & DOORS
10100 N.W. 25TH STREET
DORAL, FL. 33172
TEL. (305) 593-6590 FAX. (305) 593-6592

revisions:

no	date	by	description
A	01.06.12		NO CHANGE THIS SHEET
B	02.10.14		NO CHANGE THIS SHEET
C	05.28.14		REV. PER RER COMMENTS
D	05.05.15		NO CHANGE THIS SHEET
E	08.04.15		NO CHANGE THIS SHEET

date: 02-27-09
scale: -
dr. by: -
chk. by:

drawing no.
W09-13

WINDOW DIMS.			ANCHORS TYPE 'A'	ANCHORS TYPE 'B'
WIDTH		HEIGHT	EXT. (+) INT. (−)	EXT. (+) INT. (−)
2 PANEL	3 PANEL			
36"	48"	36"	150.0	150.0
42"	56"		150.0	150.0
48"	64"		150.0	150.0
54"	72"		143.4	150.0
60"	80"		129.1	150.0
66"	88"		117.3	150.0
72"	96"		107.6	150.0
78"	104"		99.3	120.0
84"	112"		92.2	120.0
96"	128"		80.7	120.0
108"	144"		71.7	120.0
36"	48"	48"	150.0	150.0
42"	56"		138.3	150.0
48"	64"		121.0	150.0
54"	72"		107.6	150.0
60"	80"		96.8	120.0
66"	88"		88.0	120.0
72"	96"		80.7	120.0
78"	104"		74.5	120.0
84"	112"		69.1	120.0
36"	48"	54"	143.4	150.0
42"	56"		122.9	150.0
48"	64"		107.6	150.0
54"	72"		95.6	120.0
60"	80"		86.0	120.0
66"	88"		78.2	120.0
72"	96"		71.7	120.0
78"	104"		66.2	120.0
36"	48"	60"	129.1	150.0
42"	56"		110.6	150.0
48"	64"		96.8	120.0
54"	72"		86.0	120.0
60"	80"		77.4	120.0
66"	88"		70.4	120.0
36"	48"	66"	117.3	150.0
42"	56"		100.6	120.0
48"	64"		88.0	120.0
54"	72"		78.2	120.0
60"	80"		70.4	120.0
36"	48"	72"	107.6	150.0
42"	56"		92.2	120.0
48"	64"		80.7	120.0
54"	72"		71.7	120.0
36"	48"	76"	101.9	120.0
42"	56"		87.3	120.0
48"	64"		76.4	120.0
54"	72"		67.9	120.0

WINDOW DIMS.			ANCHORS TYPE 'A'	ANCHORS TYPE 'B'
WIDTH		HEIGHT	EXT. (+) INT. (−)	EXT. (+) INT. (−)
2 PANEL	3 PANEL			
26-1/2"	35-5/16"	38-3/8"	150.0	150.0
37"	49-5/16"		150.0	150.0
53-1/8"	71"		136.4	150.0
74"	99"		97.8	120.0
79-1/2"	106"		91.4	120.0
106-1/4"	142"		68.2	120.0
26-1/2"	35-5/16"	50-5/8"	150.0	150.0
37"	49-5/16"		148.8	150.0
53-1/8"	71"		103.4	150.0
74"	99"		74.2	120.0
79-1/2"	106"		69.3	120.0
26-1/2"	35-5/16"	63"	150.0	150.0
37"	49-5/16"		119.6	150.0
53-1/8"	71"		83.1	120.0
26-1/2"	35-5/16"	72"	146.1	150.0
37"	49-5/16"		104.6	150.0
53-1/8"	71"		72.7	120.0
26-1/2"	35-5/16"	76"	138.4	150.0
37"	49-5/16"		99.1	120.0
53-1/8"	71"		68.9	120.0

ALL VALUES SHOWN ARE DESIGN PSF
VALUES FOR EXT.(+) LOADS SHOWN ARE FOR SILL WITH WATERBAR ADAPTER.
FOR WINDOWS WITHOUT WATERBAR ADAPTER LIMIT EXT.(+) LOADS TO 80.0 PSF

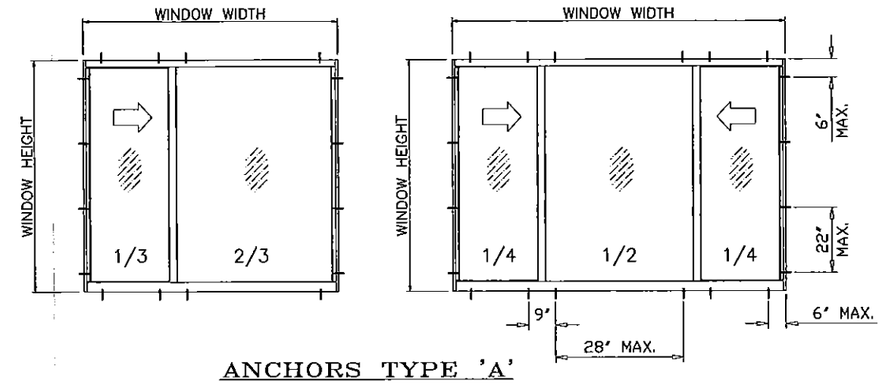

ANCHORS TYPE 'A'

2 ANCHORS AT MTG. STILE ENDS
28" MAX. SPACING BETWEEN ANCHORS
LIMIT MAX. DESIGN LOADS TO 55 PSF

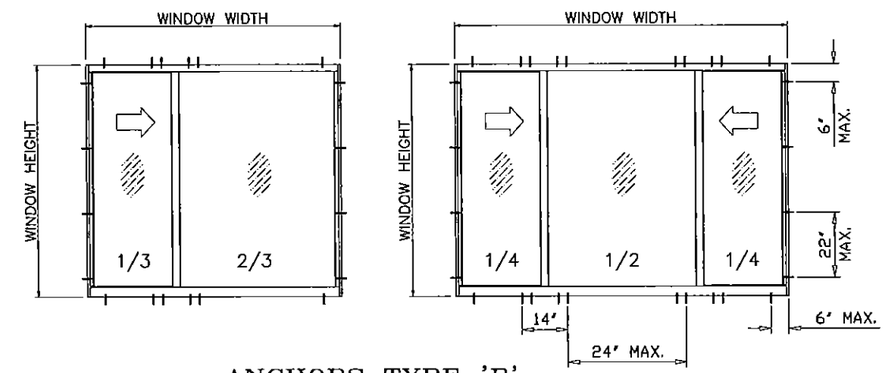

ANCHORS TYPE 'B'

4 ANCHORS AT MTG. STILE ENDS
24" MAX. SPACING BETWEEN ANCHORS
LIMIT MAX. DESIGN LOADS TO 100 PSF

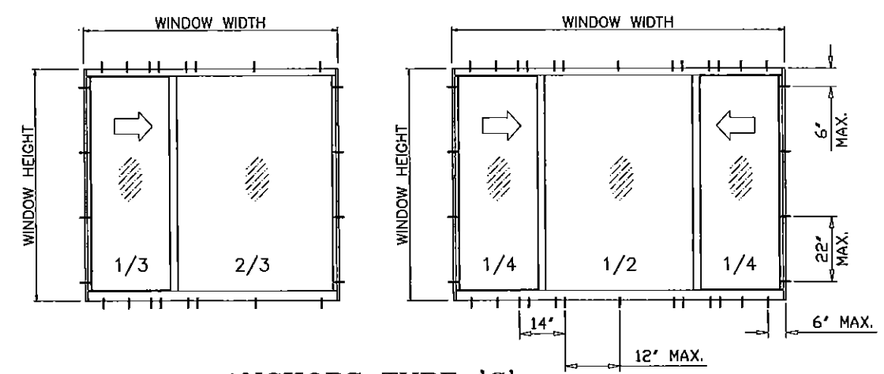

ANCHORS TYPE 'C'

4 ANCHORS AT MTG. STILE ENDS
12" MAX. SPACING BETWEEN ANCHORS
LIMIT MAX. DESIGN LOADS TO 150 PSF

NOTE:
ANCHOR SPACING TO BE AS LISTED ABOVE
3/8" MAX. SHIM SPACE FOR FLANGE AND EQUAL LEG FRAMES

PRODUCT REVISED
as complying with the Florida Building Code
Acceptance No 15-0512.03
Expiration Date 06/10/2015
By Manuel Perez
Miami Dade Product Control

Engr: JAVAD AHMAD
CIVIL
FLA. PE # 70592
C.A.N. 3538
AUG 17 2015

AL-FAROOQ CORPORATION
ENGINEERS & PRODUCT DEVELOPMENT
1235 S.W. 87 AVE
MIAMI, FLORIDA 33174
TEL (305) 264-8100 FAX. (305) 262-6978

COMP-ANL\W09-13CGI

SERIES-375 ALUM. HORIZ. ROLLING WDW. (L.M.I.)

CGI WINDOWS & DOORS
10100 N.W. 25TH STREET
DORAL, FL. 33172
TEL. (305) 593-6590 FAX. (305) 593-6592

revisions:

no	date	by	description
A	01.06.12		CHART REV.
B	02.10.14		NO CHANGE THIS SHEET
C	05.28.14		REV. PER RER COMMENTS
D	05.05.15		NO CHANGE THIS SHEET
E	08.04.15		NO CHANGE THIS SHEET

date: 02-27-09
scale: -
dr. by: -
chk. by:

drawing no.
W09-13

sheet 8.1 of 16

INSTALLATION CONDITIONS FLANGE FRAME

FLANGE FRAME INSTALLATION TYPE '1' THRU 1 BY WOOD BUCK

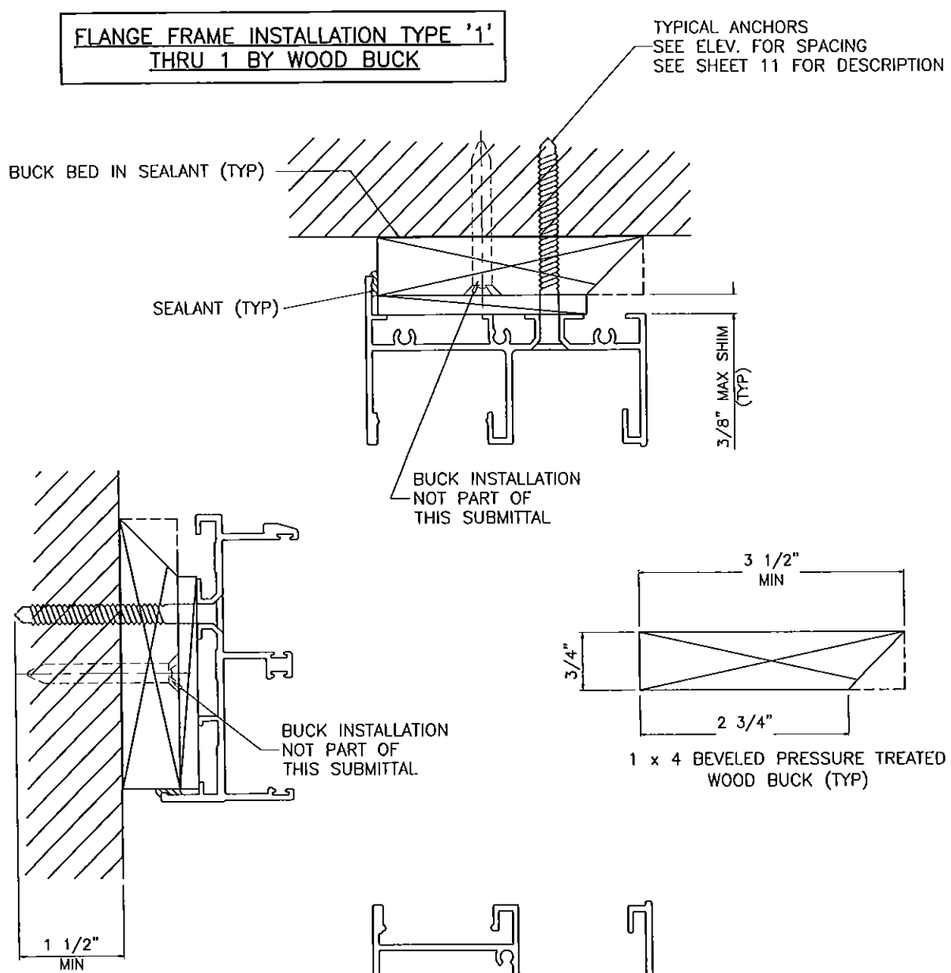

FLANGE FRAME INSTALLATION TYPE '2' THRU 2 BY WOOD BUCK

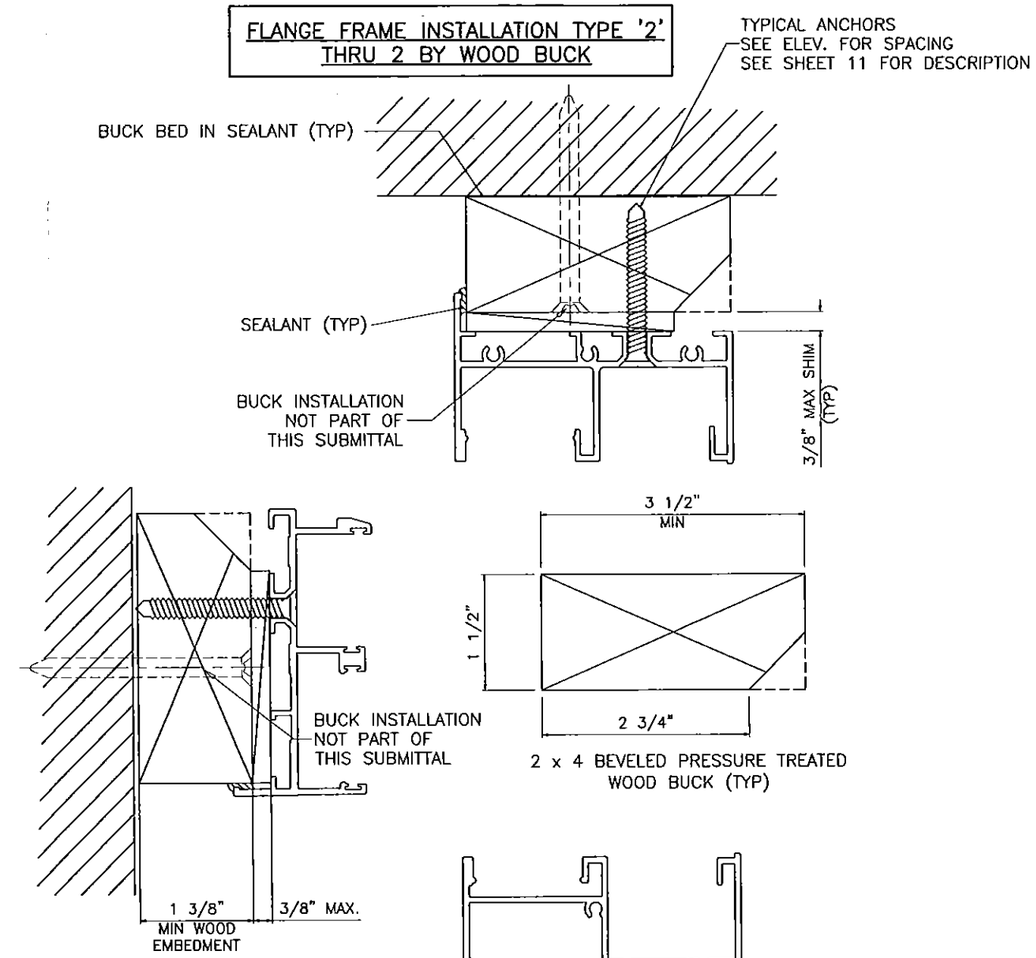

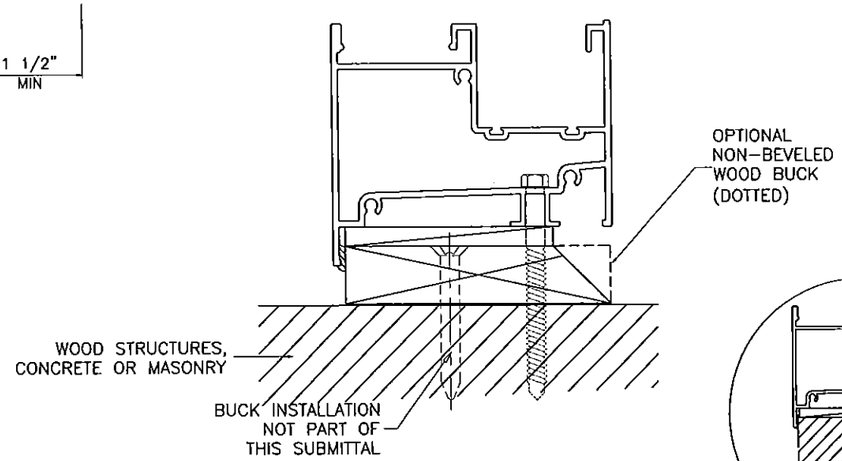

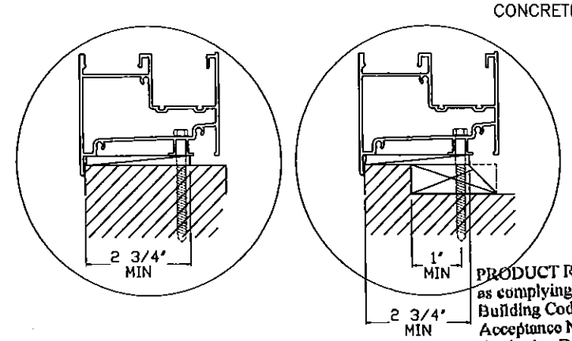

Optional Pre-Cast Sill

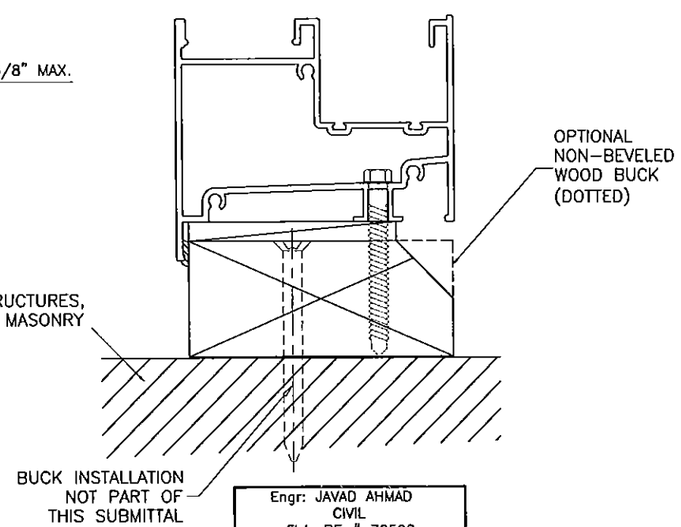

WOOD BUCKS NOT BY CGI CORP., MUST SUSTAIN LOADS IMPOSED BY GLAZING SYSTEM AND TRANSFER THEM TO THE BUILDING STRUCTURE.

PRODUCT REVISED
as complying with the Florida Building Code
Acceptance No 15-0512.03
Expiration Date 06/10/2019
By Manuel Sere
Miami Dade Product Control

Engr: JAVAD AHMAD
CIVIL
FLA. PE # 70592
C.A.N. 3538
AUG 07 2015

AL-FAROOQ CORPORATION
ENGINEERS & PRODUCT DEVELOPMENT
1235 S.W. 87 AVE
MIAMI, FLORIDA 33174
TEL (305) 264-8100 FAX. (305) 262-6978
COMP-ANL\W09-13CGI

SERIES-375 ALUM. HORIZ. ROLLING WDW. (L.M.I.)

CGI WINDOWS & DOORS
10100 N.W. 25TH STREET
DORAL, FL. 33172
TEL. (305) 593-6590 FAX. (305) 593-6592

revisions:

no	date	by	description
A	01.06.12		NO CHANGE THIS SHEET
B	02.10.14		NO CHANGE THIS SHEET
C	05.28.14		REV. PER RER COMMENTS
D	05.05.15		NO CHANGE THIS SHEET
E	08.04.15		NO CHANGE THIS SHEET

date: 02-27-09
scale: -
dr. by: -
chk. by:

drawing no. W09-13

INSTALLATION CONDITIONS EQUAL LEG FRAME

EQUAL LEG INSTALLATION TYPE '1' THRU 1 OR 2 BY WOOD BUCK

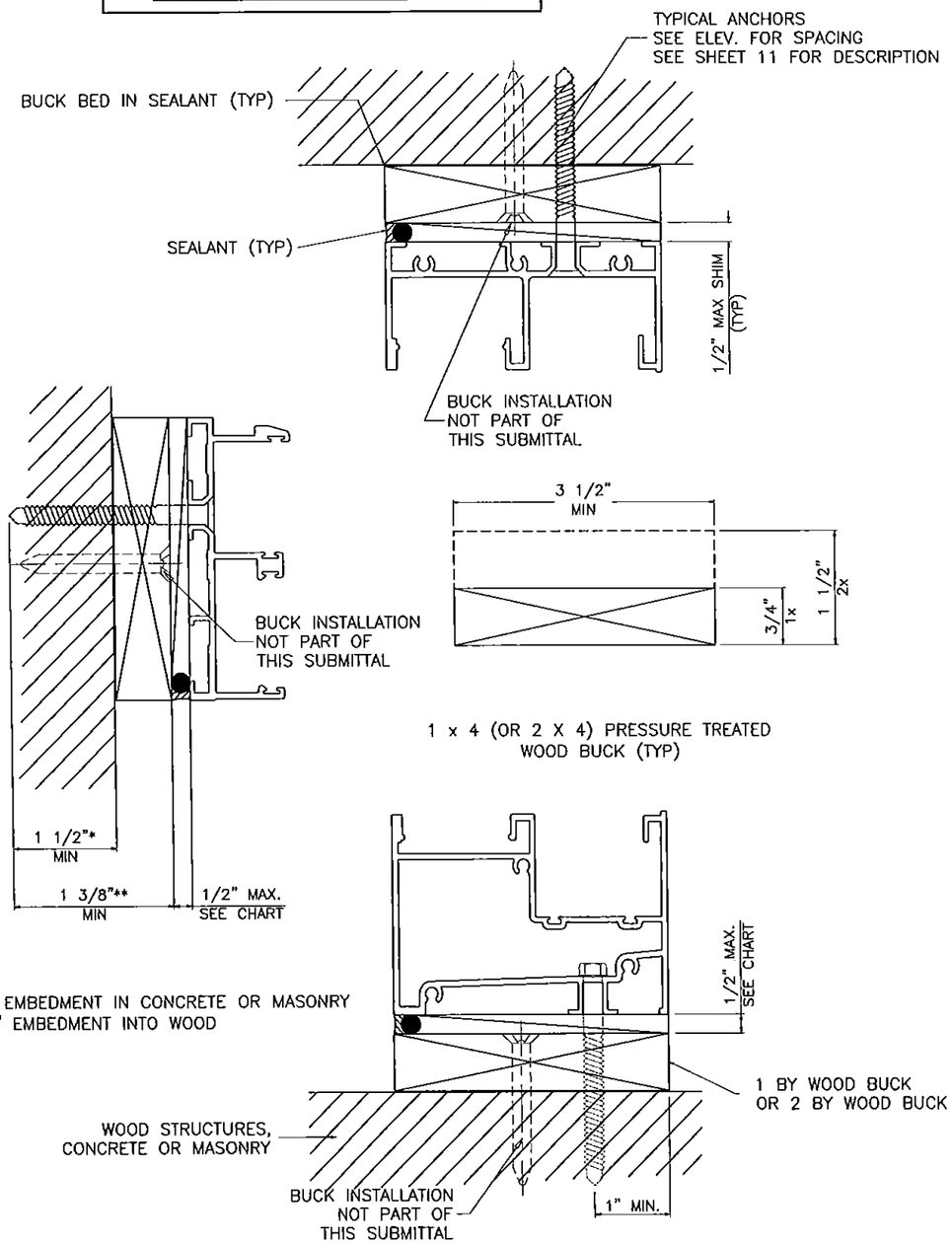

*1 1/2" EMBEDMENT IN CONCRETE OR MASONRY
**1 3/8" EMBEDMENT INTO WOOD

EQUAL LEG INSTALLATION TYPE '2' DIRECTLY INTO STRUCTURE OPENING

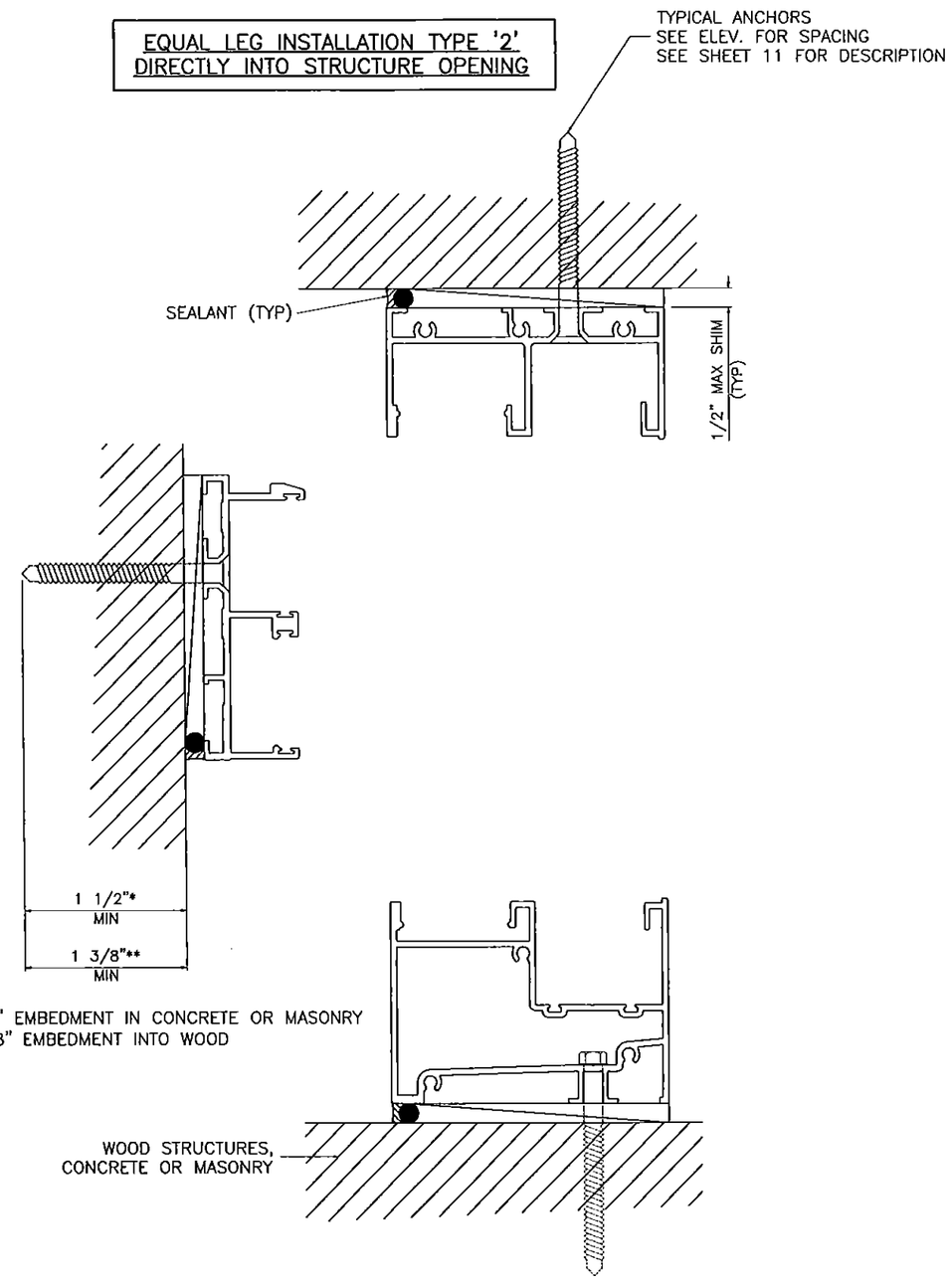

*1 1/2" EMBEDMENT IN CONCRETE OR MASONRY
**1 3/8" EMBEDMENT INTO WOOD

WOOD BUCKS NOT BY CGI CORP., MUST SUSTAIN LOADS IMPOSED BY GLAZING SYSTEM AND TRANSFER THEM TO THE BUILDING STRUCTURE.

PRODUCT REVISED
as complying with the Florida
Building Code
Acceptance No. 15-0512.03
Expiration Date 06/10/2019
By Manuel Perez
Miami Dade Product Control

Engr: JAVAD AHMAD
CIVIL
FLA. PE # 70592
C.A.N. 3538
AUG 07 2015

AL-FAROOQ CORPORATION
ENGINEERS & PRODUCT DEVELOPMENT
1235 S.W. 87 AVE
MIAMI, FLORIDA 33174
TEL (305) 264-8100 FAX (305) 262-6978

COMP-ANL\W09-13CGI

SERIES-375 ALUM. HORIZ. ROLLING WDW. (L.M.I.)

CGI WINDOWS & DOORS
10100 N.W. 25TH STREET
DORAL, FL. 33172
TEL (305) 593-6590 FAX. (305) 593-6592

revisions:

no	date	by	description
A	01.06.12		NO CHANGE THIS SHEET
B	02.10.14		NO CHANGE THIS SHEET
C	05.28.14		REV. PER RER COMMENTS
D	05.05.15		NO CHANGE THIS SHEET
E	08.04.15		NO CHANGE THIS SHEET

date: 02-27-09
scale: -
dr. by: -
chk. by:

drawing no. W09-13

INSTALLATION CONDITIONS METAL STRUCTURES

FLANGE FRAME INSTALLATION

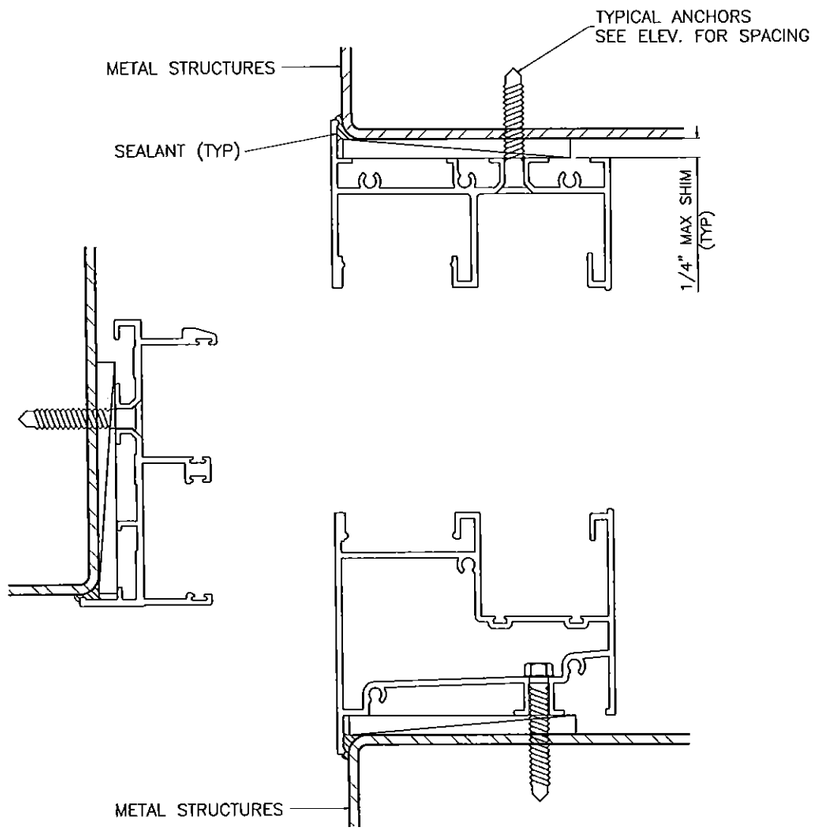

EQUAL LEG FRAME INSTALLATION

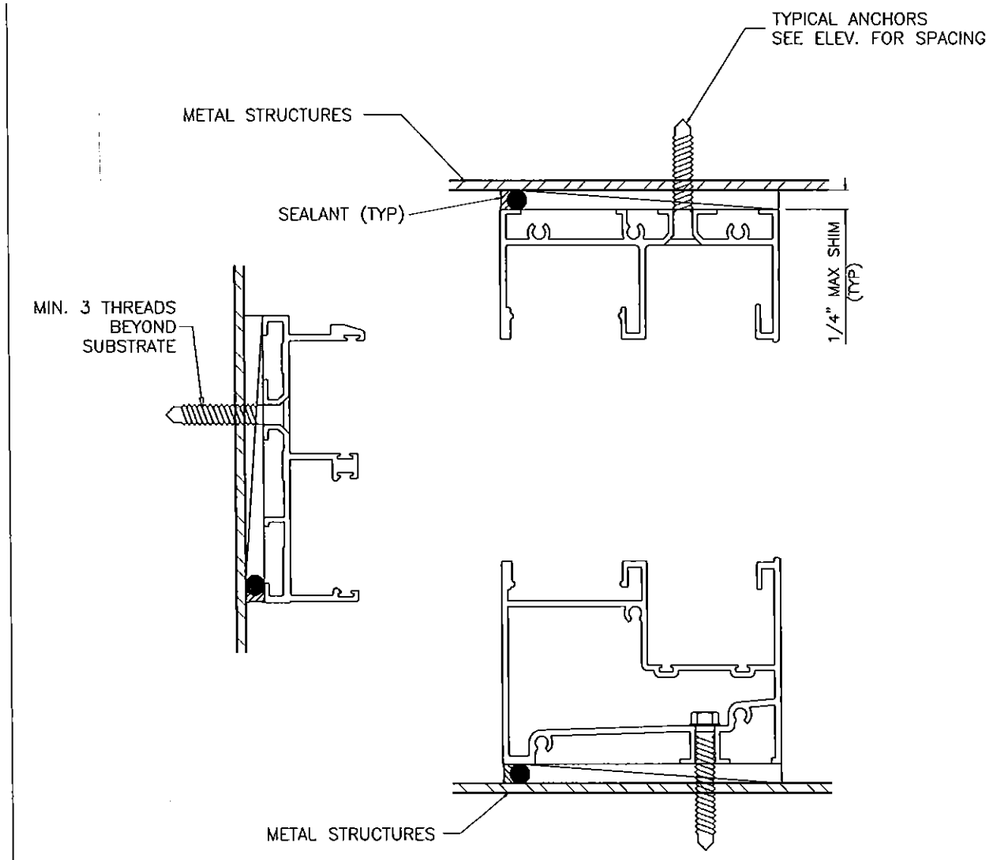

TYPICAL ANCHORS: SEE ELEV. FOR SPACING

1/4" DIA. ULTRACON BY 'ELCO' (Fu=177 KSI, Fy=155 KSI)

1/4" DIA. HILTI KWIK-CON II (Fu=163 KSI, Fy=157 KSI)

INTO 2BY WOOD BUCKS OR WOOD STRUCTURES
1-1/2" MIN. PENETRATION INTO WOOD

THRU 1BY BUCKS INTO CONC. OR MASONRY
1-3/4" MIN. EMBED INTO CONCRETE (HEAD/SILL)
1-1/4" MIN. EMBED INTO CONC. OR MASONRY (JAMBS)

DIRECTLY INTO CONC. OR MASONRY
1-1/2" MIN. EMBED INTO CONCRETE (HEAD/SILL)
1-1/2" MIN. EMBED INTO CONC. OR MASONRY (JAMBS)

1/4" DIA. TEKS OR SELF DRILLING SCREWS (GRADE 5 CRS)
INTO MIAMI-DADE COUNTY APPROVED MULLIONS (MIN. THK. = .090")
INTO METAL STRUCTURES
STEEL : 1/8" THK. MIN. (Fy = 36 KSI MIN.)
ALUMINUM : 1/8" THK. MIN. (6063-T5 MIN.)
(STEEL IN CONTACT WITH ALUMINUM TO BE PLATED OR PAINTED)

TYPICAL EDGE DISTANCE

INTO CONCRETE AND MASONRY = 2-1/2" MIN.
INTO WOOD STRUCTURE = 1" MIN.
INTO METAL STRUCTURE = 3/4" MIN.

WOOD AT HEAD, SILL OR JAMBS SG = 0.55 MIN.
CONCRETE AT HEAD, SILL OR JAMBS f'c = 3000 PSI MIN.
C-90 FILLED NORMAL WEIGHT BLOCK AT JAMBS f'm = 2000 PSI MIN.

PRODUCT REVISED
as complying with the Florida
Building Code
Acceptance No 15-0512.03
Expiration Date 06/10/2019
By Manuel Perez
Miami Dade Product Control

Engr: JAVAD AHMAD
CIVIL
FLA. PE # 70592
C.A.N. 3538
AUG 07 2015

AL-FAROOQ CORPORATION
ENGINEERS & PRODUCT DEVELOPMENT
1235 S.W. 87 AVE
MIAMI, FLORIDA 33174
TEL (305) 264-8100 FAX. (305) 262-6978
COMP-ANL\W09-13CGI

SERIES-375 ALUM. HORIZ. ROLLING WDW. (L.M.I.)

CGI WINDOWS & DOORS
10100 N.W. 25TH STREET
DORAL, FL. 33172
TEL. (305) 593-6590 FAX. (305) 593-6592

revisions:

no	date	by	description
A	01.06.12		NO CHANGE THIS SHEET
B	02.10.14		NO CHANGE THIS SHEET
C	05.28.14		REV. PER RER COMMENTS
D	05.05.15		NO CHANGE THIS SHEET
E	08.04.15		REV. PER RER COMMENTS

date: 02-27-09
scale: -
dr. by: -
chk. by:

drawing no.
W09-13

MULLION PERFORMANCE

MULLION AT FLANGE WINDOWS

1" x 4" x 1/8" thk. Aluminum Tube Mullion (unclipped at ends) (Mull length = Wdw Height − 1")

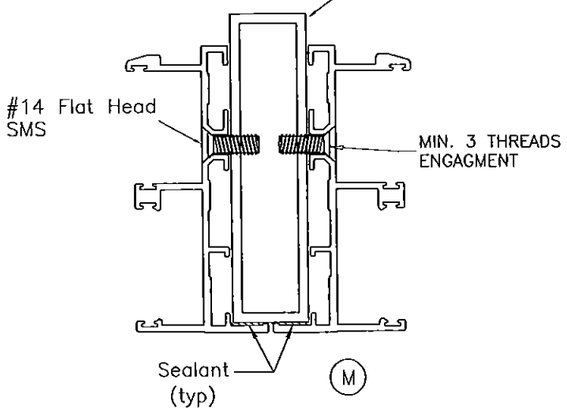

MULLION AT EQUAL LEG WINDOWS

1" x 4" x 1/8" thk. Aluminum Tube Mullion (unclipped at ends) (Mull length = Wdw Height)

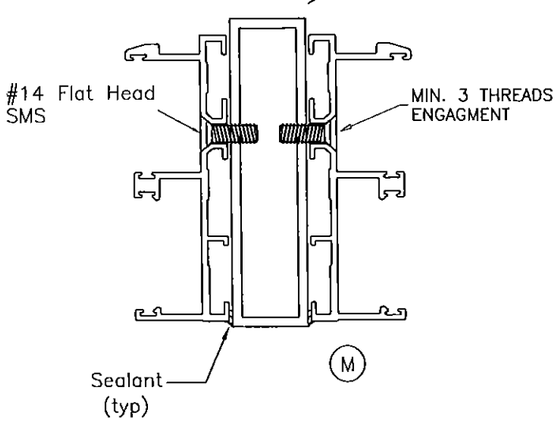

STANDARD INSTALLATION

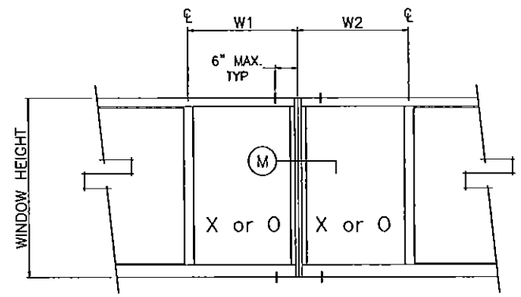

MULTIPLE OPENING
(2 OR MORE WINDOWS)
w/ 1 SCREW ON EACH SIDE OF MULLION

HIGH LOAD INSTALLATION

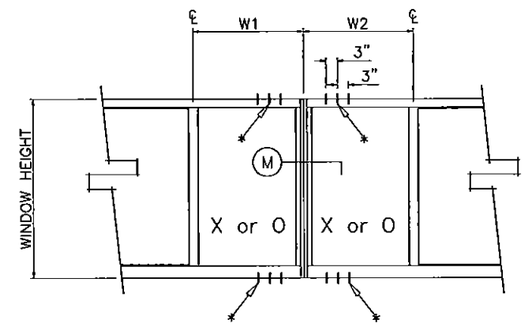

MULTIPLE OPENING
(2 OR MORE WINDOWS)
w/ 2 OR 3 SCREWS ON EACH SIDE OF MULLION
(* = ADDITIONAL HOLES TO BE DRILLED BY INSTALLER)

$$\text{TRIBUTARY WIDTH} = \frac{W1 + W2}{2}$$

MULLION DESIGN LOAD CAPACITY − PSF

TRIBUTARY WIDTH	WINDOW HEIGHT	EXT.(+) INT.(−)
24"	54"	150.0
28"		150.0
30"		150.0
32"		150.0
36"		120.0
39"		120.0
40"		120.0
42"		120.0
44"		120.0
46"		120.0
48"		120.0
52"		120.0
24"	60"	150.0
28"		150.0
30"		150.0
32"		120.0
36"		120.0
39"		120.0
40"		120.0
42"		120.0
44"		120.0
46"		120.0
24"	66"	150.0
28"		120.0
30"		120.0
32"		120.0
36"		120.0
39"		120.0
40"		120.0
42"		120.0

MULLION DESIGN LOAD CAPACITY − PSF

TRIBUTARY WIDTH	WINDOW HEIGHT	EXT.(+) INT.(−)
24"	72"	150.0
28"		120.0
30"		120.0
32"		120.0
36"		120.0
39"		120.0
24"	76"	120.0
28"		120.0
30"		120.0
32"		120.0
36"		120.0
37"		120.0

MULLION DESIGN LOAD CAPACITY − PSF

TRIBUTARY WIDTH	WINDOW HEIGHT	EXT.(+) INT.(−)
18"	38-3/8"	150.0
26-1/2"		150.0
37"		150.0
44"		150.0
56"		120.0
71"		120.0
18"	50-5/8"	150.0
26-1/2"		150.0
37"		120.0
44"		120.0
55"		120.0
18"	63"	150.0
26-1/2"		150.0
37"		120.0
44"		120.0
18"	72"	150.0
26-1/2"		120.0
37"		120.0
39"		120.0
18"	76"	150.0
26-1/2"		120.0
37"		120.0

NOTE: VALUES FROM CHARTS MAY BE INTERPOLATED BETWEEN SIZES

PRODUCT REVISED
as complying with the Florida Building Code
Acceptance No 15-0512.03
Expiration Date 06/10/2019
By Manuel Diaz
Miami-Dade Product Control

ALL VALUES SHOWN ARE DESIGN PSF
VALUES FOR EXT.(+) LOADS SHOWN ARE FOR SILL WITH WATERBAR ADAPTER.
FOR WINDOWS WITHOUT WATERBAR ADAPTER LIMIT EXT.(+) LOADS TO 80.0 PSF

Engr: JAVAD AHMAD
CIVIL
FLA. PE # 70592
C.A.N. 3538

AUG 07 2015

AL-FAROOQ CORPORATION
ENGINEERS & PRODUCT DEVELOPMENT
1235 S.W. 87 AVE
MIAMI, FLORIDA 33174
TEL (305) 264-8100 FAX (305) 262-6978
COMP-ANL\W09-13CGI

SERIES-375 ALUM. HORIZ. ROLLING WDW. (L.M.I.)

CGI WINDOWS & DOORS
10100 N.W. 25TH STREET
MIAMI, FL. 33172
TEL. (305) 593-6590 FAX. (305) 593-6592

revisions:

no	date	by	description
A	01.06.12		NO CHANGE THIS SHEET
B	02.10.14		NO CHANGE THIS SHEET
C	05.28.14		REV. PER RER COMMENTS
D	05.05.15		NO CHANGE THIS SHEET
E	08.04.15		NO CHANGE THIS SHEET

date: 02-27-09
scale: -
dr. by: -
chk. by:

drawing no.
W09-13

PERFORMANCE VALUES OF UNCLIPPED MULLION ANCHORS EXT.(+) & INT.(−)				
TRIBUTARY WIDTH	WINDOW HEIGHT	CLUSTER OF 2	CLUSTER OF 4	CLUSTER OF 6
24"	54"	107.6	150.0	150.0
28"		92.2	150.0	150.0
30"		86.0	150.0	150.0
32"		80.7	150.0	150.0
36"		71.7	120.0	120.0
40"		64.5	120.0	120.0
44"		58.7	117.3	120.0
48"		53.8	107.6	120.0
52"		49.6	99.3	120.0
24"	60"	96.8	150.0	150.0
28"		83.0	150.0	150.0
30"		77.4	150.0	150.0
32"		72.6	120.0	120.0
36"		64.5	120.0	120.0
40"		58.1	116.2	120.0
44"		52.8	105.6	120.0
24"	66"	88.0	150.0	150.0
28"		75.4	120.0	120.0
30"		70.4	120.0	120.0
32"		66.0	120.0	120.0
36"		58.7	117.3	120.0
40"		52.8	105.6	120.0
24"	72"	80.7	150.0	150.0
28"		69.1	120.0	120.0
30"		64.5	120.0	120.0
32"		60.5	120.0	120.0
36"		53.8	107.6	120.0
24"	76"	76.4	120.0	120.0
28"		65.5	120.0	120.0
30"		61.1	120.0	120.0
32"		57.3	114.6	120.0
36"		50.9	101.9	120.0

ALL VALUES SHOWN ARE DESIGN PSF
VALUES FOR EXT.(+) LOADS SHOWN ARE FOR SILL WITH WATERBAR ADAPTER.
FOR WINDOWS WITHOUT WATERBAR ADAPTER LIMIT EXT.(+) LOADS TO 80.0 PSF

PERFORMANCE VALUES OF UNCLIPPED MULLION ANCHORS EXT.(+) & INT.(−)				
TRIBUTARY WIDTH	WINDOW HEIGHT	CLUSTER OF 2	CLUSTER OF 4	CLUSTER OF 6
18"	38-3/8"	150.0	150.0	150.0
26-1/2'		137.1	150.0	150.0
37"		98.2	150.0	150.0
44"		82.6	150.0	150.0
56"		64.9	120.0	120.0
71"		51.2	102.3	120.0
18"	50-5/8"	150.0	150.0	150.0
26-1/2'		103.9	150.0	150.0
37"		74.4	120.0	120.0
44"		62.6	120.0	120.0
18"	63"	122.9	150.0	150.0
26-1/2'		83.5	150.0	150.0
37"		59.8	119.6	120.0
44"		50.3	100.6	120.0
18"	72"	107.6	150.0	150.0
26-1/2'		73.1	120.0	120.0
37"		52.3	104.6	120.0
18"	76"	101.9	150.0	150.0
26-1/2'		69.2	120.0	120.0
37"		49.6	99.1	120.0

NOTE: VALUES FROM CHARTS MAY BE INTERPOLATED BETWEEN SIZES

MULLION ANCHORS
ADJACENT TO MULLIONS AT HEAD & SILL
ALL OTHER WINDOW ANCHORS
AS PER SHEETS 9 THRU 11

$$\text{TRIBUTARY WIDTH} = \frac{W1 + W2}{2}$$

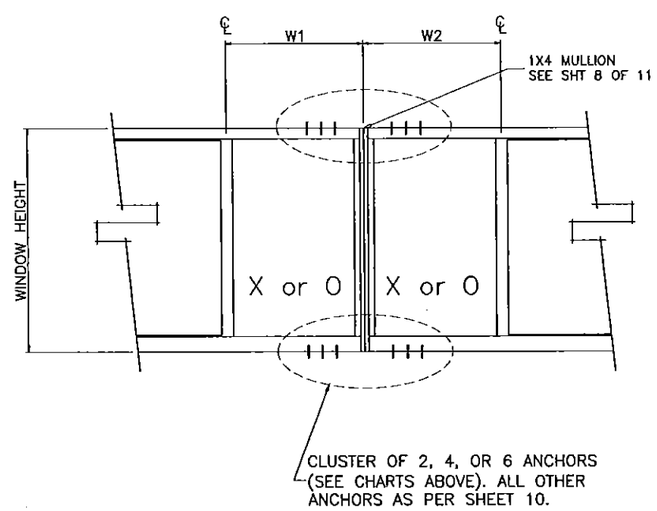

PRODUCT REVISED
as complying with the Florida
Building Code
Acceptance No 15-0512.03
Expiration Date 06/10/2019
By Manuel Perez
Miami-Dade Product Control

Engr: JAVAD AHMAD
CIVIL
FLA. PE # 70592
C.A.N. 3538
AUG 04 2015

AL-FAROOQ CORPORATION
ENGINEERS & PRODUCT DEVELOPMENT
1235 S.W. 87 AVE
MIAMI, FLORIDA 33174
TEL. (305) 264-8100 FAX. (305) 262-6978

COMP-ANL\W09-13CGI

SERIES-375 ALUM. HORIZ. ROLLING WDW. (L.M.I.)

CGI WINDOWS & DOORS
10100 N.W. 25TH STREET
MIAMI, FL. 33172
TEL. (305) 593-6590 FAX. (305) 593-6592

revisions:

no	date	by	description
A	01.06.12		CHART REV.
B	02.10.14		NO CHANGE THIS SHEET
C	05.28.14		REV. PER RER COMMENTS
D	05.05.15		NO CHANGE THIS SHEET
E	08.04.15		NO CHANGE THIS SHEET

date: 02-27-09
scale: –
dr. by: –
chk. by:

drawing no.
W09-13

sheet 13 of 16

ALUMINUM BUCK FRAMING DETAILS

REFER TO SHEETS 5 & 7 FOR WINDOW CAPACITIES
USE LOWER APPLICABLE VALUES.

PRODUCT REVISED
as complying with the Florida
Building Code
Acceptance No. 15-0512.03
Expiration Date 06/10/2019
By Manuel Diaz
Miami Dade Product Control

PERFORMANCE VALUES
OF ALUMINUM BUCK
INSTALLATION ANCHORS
EXT.(+) & INT.(−)

WINDOW DIMS.		ANCHORS AT 16" O.C.		ANCHORS AT 8" O.C.	
WIDTH	HEIGHT	WOOD/BLOCK	CONC.	WOOD/BLOCK	CONC.
36"	36"	150.0	150.0	150.0	150.0
48"		150.0	150.0	150.0	150.0
56"		124.6	150.0	150.0	150.0
60"		112.8	150.0	150.0	150.0
64"		128.7	150.0	150.0	150.0
72"		109.6	150.0	150.0	150.0
80"		114.6	150.0	150.0	150.0
84"		107.6	150.0	150.0	150.0
88"		101.5	144.0	150.0	150.0
96"		106.3	150.0	150.0	150.0
108"		92.1	130.7	150.0	150.0
112"		100.8	143.0	150.0	150.0
117"		95.7	135.8	150.0	150.0
126"		98.7	140.0	150.0	150.0
144"		94.0	133.3	150.0	150.0
36"	48"	150.0	150.0	150.0	150.0
48"		148.0	150.0	150.0	150.0
56"		111.0	150.0	150.0	150.0
60"		98.7	140.0	150.0	150.0
64"		111.0	150.0	150.0	150.0
72"		92.5	131.3	150.0	150.0
80"		95.1	135.0	150.0	150.0
84"		88.8	126.0	148.0	150.0
88"		83.3	118.1	150.0	150.0
96"		86.3	122.5	148.0	150.0
108"		74.0	105.0	137.4	150.0
112"		80.7	114.5	141.3	150.0
117"		76.4	108.4	143.2	150.0
126"		78.4	111.2	139.3	150.0
144"		74.0	105.0	133.2	150.0
36"	54"	131.6	150.0	150.0	150.0
48"		118.4	150.0	150.0	150.0
56"		108.9	150.0	150.0	150.0
60"		95.7	135.8	150.0	150.0
64"		106.7	150.0	150.0	150.0
72"		87.7	124.4	150.0	150.0
80"		89.4	126.8	148.9	150.0
84"		83.1	117.9	138.5	150.0
88"		77.6	110.2	142.3	150.0
96"		80.1	113.6	137.3	150.0
108"		68.2	96.8	126.7	150.0
112"		74.3	105.4	130.0	150.0
117"		70.2	99.6	131.6	150.0
126"		71.8	101.8	127.6	150.0
144"		67.5	95.7	121.4	150.0
36"	60"	112.8	150.0	150.0	150.0
48"		98.7	140.0	150.0	150.0
56"		95.1	135.0	150.0	150.0
60"		94.7	134.4	150.0	150.0
64"		94.7	134.4	150.0	150.0
72"		84.6	120.0	150.0	150.0
80"		85.2	121.0	142.1	150.0
84"		78.9	112.0	131.6	150.0
88"		73.5	104.3	134.7	150.0
96"		75.3	106.9	129.2	150.0
108"		63.8	90.5	118.4	150.0
112"		69.3	98.3	121.3	150.0
117"		65.3	92.7	122.5	150.0
126"		66.6	94.5	118.4	150.0

PERFORMANCE VALUES
OF ALUMINUM BUCK
INSTALLATION ANCHORS
EXT.(+) & INT.(−)

WINDOW DIMS.		ANCHORS AT 16" O.C.		ANCHORS AT 8" O.C.	
WIDTH	HEIGHT	WOOD/BLOCK	CONC.	WOOD/BLOCK	CONC.
36"	66"	123.3	150.0	150.0	150.0
48"		105.7	150.0	150.0	150.0
56"		100.2	142.1	150.0	150.0
60"		94.7	134.4	150.0	150.0
64"		97.9	139.0	150.0	150.0
72"		82.8	117.5	149.0	150.0
80"		82.4	117.0	137.4	150.0
84"		76.0	107.8	126.6	150.0
88"		70.5	100.0	129.2	150.0
96"		71.8	101.8	123.0	150.0
108"		60.3	85.5	111.9	150.0
112"		65.4	92.8	114.4	150.0
117"		61.5	87.3	115.3	150.0
126"		62.5	88.7	111.1	150.0
36"	72"	109.6	150.0	150.0	150.0
48"		92.5	131.3	150.0	150.0
56"		86.5	122.7	150.0	150.0
60"		84.6	120.0	150.0	150.0
64"		83.2	118.1	149.8	150.0
72"		82.2	116.7	148.0	150.0
80"		80.7	114.5	134.5	150.0
84"		74.0	105.0	123.3	150.0
88"		68.3	96.9	125.2	150.0
96"		69.1	98.0	118.4	150.0
108"		57.6	81.7	106.9	150.0
112"		62.3	88.4	109.1	150.0
117"		58.5	83.0	109.6	150.0
36"	76"	102.1	144.8	150.0	150.0
48"		85.4	121.2	150.0	150.0
56"		79.3	112.5	142.7	150.0
60"		77.2	109.6	139.0	150.0
64"		75.7	107.4	136.2	150.0
72"		74.0	105.0	133.2	150.0
80"		73.8	104.7	132.8	150.0
84"		73.2	103.8	121.9	150.0
88"		67.3	95.5	123.4	150.0
96"		67.7	96.0	116.0	150.0
108"		56.1	79.6	104.2	147.8

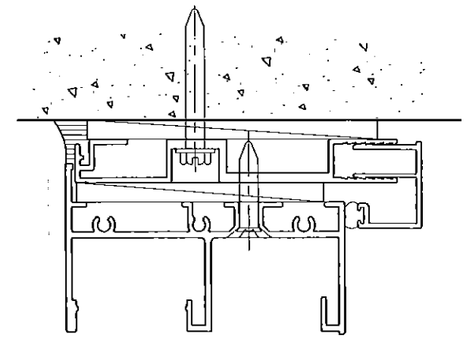

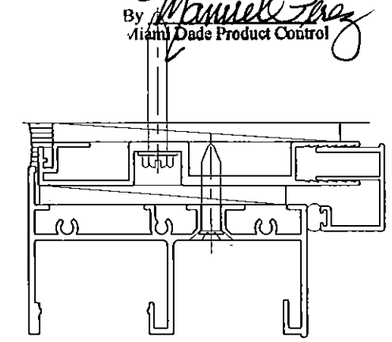

ALL VALUES SHOWN ARE DESIGN PSF
VALUES FOR EXT.(+) LOADS SHOWN ARE FOR
SILL WITH WATERBAR ADAPTER.
FOR WINDOWS WITHOUT WATERBAR ADAPTER
LIMIT EXT.(+) LOADS TO 80.0 PSF

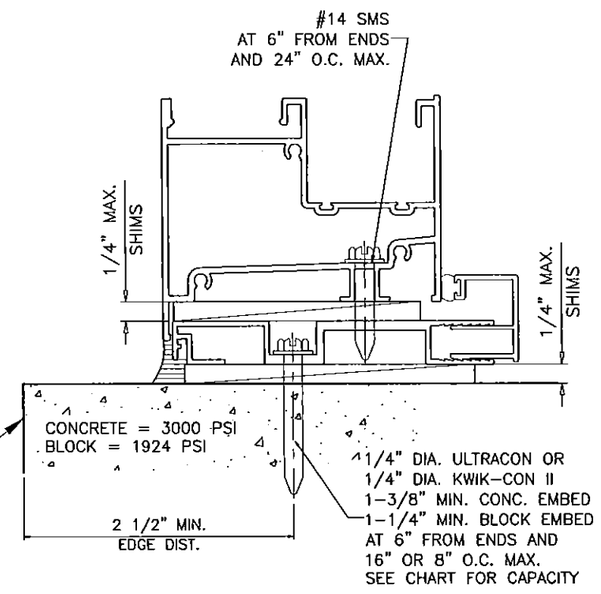

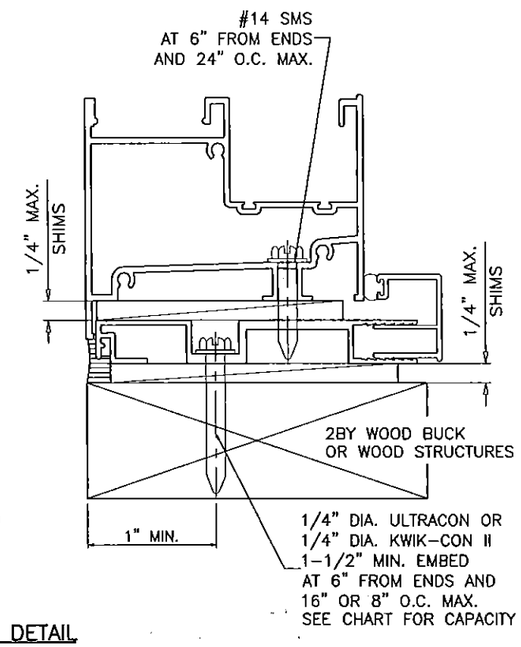

TYPICAL INSTALLATION DETAIL
ON ALL FOUR SIDES/USING ALUMINUM BUCK SYSTEM

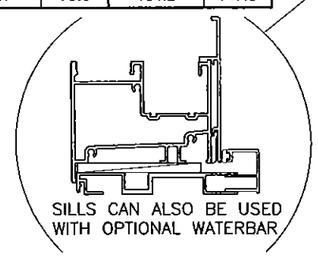

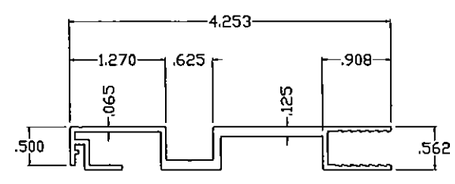

ALUMINUM BUCK
6063-T6

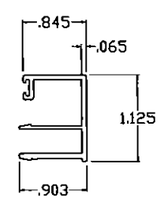

OPTIONAL COVER
6063-T6

NOTE: VALUES FROM CHARTS MAY
BE INTERPOLATED BETWEEN SIZES

Engr: JAVAD AHMAD
CIVIL
FLA. PE # 70592
C.A.N. 3538
AUG 07 2015

AL-FAROOQ CORPORATION
ENGINEERS & PRODUCT DEVELOPMENT
1235 S.W. 87 AVE
MIAMI, FLORIDA 33174
TEL. (305) 264-8100 FAX. (305) 262-6978

COMP-ANL\W09-13CGI

SERIES-375 ALUM. HORIZ. ROLLING WDW. (L.M.I.)

CGI WINDOWS & DOORS
10100 N.W. 25TH STREET
MIAMI, FL. 33172
TEL. (305) 593-6590 FAX. (305) 593-6592

revisions:

no	date	by	description
A	01.06.12		CHART REV.
B	02.10.14		NO CHANGE THIS SHEET
C	05.28.14		REV. PER RER COMMENTS
D	05.05.15		NO CHANGE THIS SHEET
E	08.04.15		NO CHANGE THIS SHEET

date: 02-27-09
scale: –
dr. by: –
chk. by:

drawing no.
W09-13

ALUMINUM BUCK FRAMING DETAILS

REFER TO SHEETS 5 & 7 FOR WINDOW CAPACITIES
USE LOWER APPLICABLE VALUES.

PRODUCT REVISED
as complying with the Florida
Building Code
Acceptance No 15-0512.03
Expiration Date 06/10/2019
By Manuel Perez
Miami/Dade Product Control

PERFORMANCE VALUES OF ALUMINUM BUCK INSTALLATION ANCHORS
EXT.(+) & INT.(−)

WINDOW DIMS.		ANCHORS AT 16" O.C.		ANCHORS AT 8" O.C.	
WIDTH	HEIGHT	WOOD/BLOCK	CONC.	WOOD/BLOCK	CONC.
26-1/2"	38-3/8"	150.0	150.0	150.0	150.0
53-1/8"		130.9	150.0	150.0	150.0
79-11/16"		110.2	150.0	150.0	150.0
106-1/4"		89.3	126.7	150.0	150.0
111"		96.8	137.3	150.0	150.0
119-1/4"		88.8	126.0	150.0	150.0
159-3/8"		87.2	123.7	150.0	150.0
26-1/2"	50-5/8"	150.0	150.0	150.0	150.0
53-1/8"		121.1	150.0	150.0	150.0
79-11/16"		92.9	131.8	150.0	150.0
106-1/4"		72.8	103.3	135.2	150.0
111"		78.6	111.5	137.6	150.0
119-1/4"		71.7	101.7	134.4	150.0
159-3/8"		69.1	98.0	125.6	150.0
26-1/2"	63"	150.0	150.0	150.0	150.0
53-1/8"		110.1	150.0	150.0	150.0
79-11/16"		84.2	119.5	140.4	150.0
106-1/4"		63.4	89.9	117.7	150.0
111"		68.1	96.6	119.1	150.0
119-1/4"		61.7	87.5	115.7	150.0
26-1/2"	72"	136.9	150.0	150.0	150.0
53-1/8"		88.3	125.3	150.0	150.0
79-11/16"		81.3	115.4	135.5	150.0
106-1/4"		59.0	83.7	109.6	150.0
111"		63.1	89.6	110.5	150.0
26-1/2"	76"	128.2	150.0	150.0	150.0
53-1/8"		81.1	115.1	146.1	150.0
79-11/16"		73.8	104.7	132.8	150.0
106-1/4"		57.5	81.6	106.8	150.0
111"		61.5	87.2	107.6	150.0

NOTE: VALUES FROM CHARTS MAY BE INTERPOLATED BETWEEN SIZES

ALL VALUES SHOWN ARE DESIGN PSF
VALUES FOR EXT.(+) LOADS SHOWN ARE FOR SILL WITH WATERBAR ADAPTER.
FOR WINDOWS WITHOUT WATERBAR ADAPTER LIMIT EXT.(+) LOADS TO 80.0 PSF

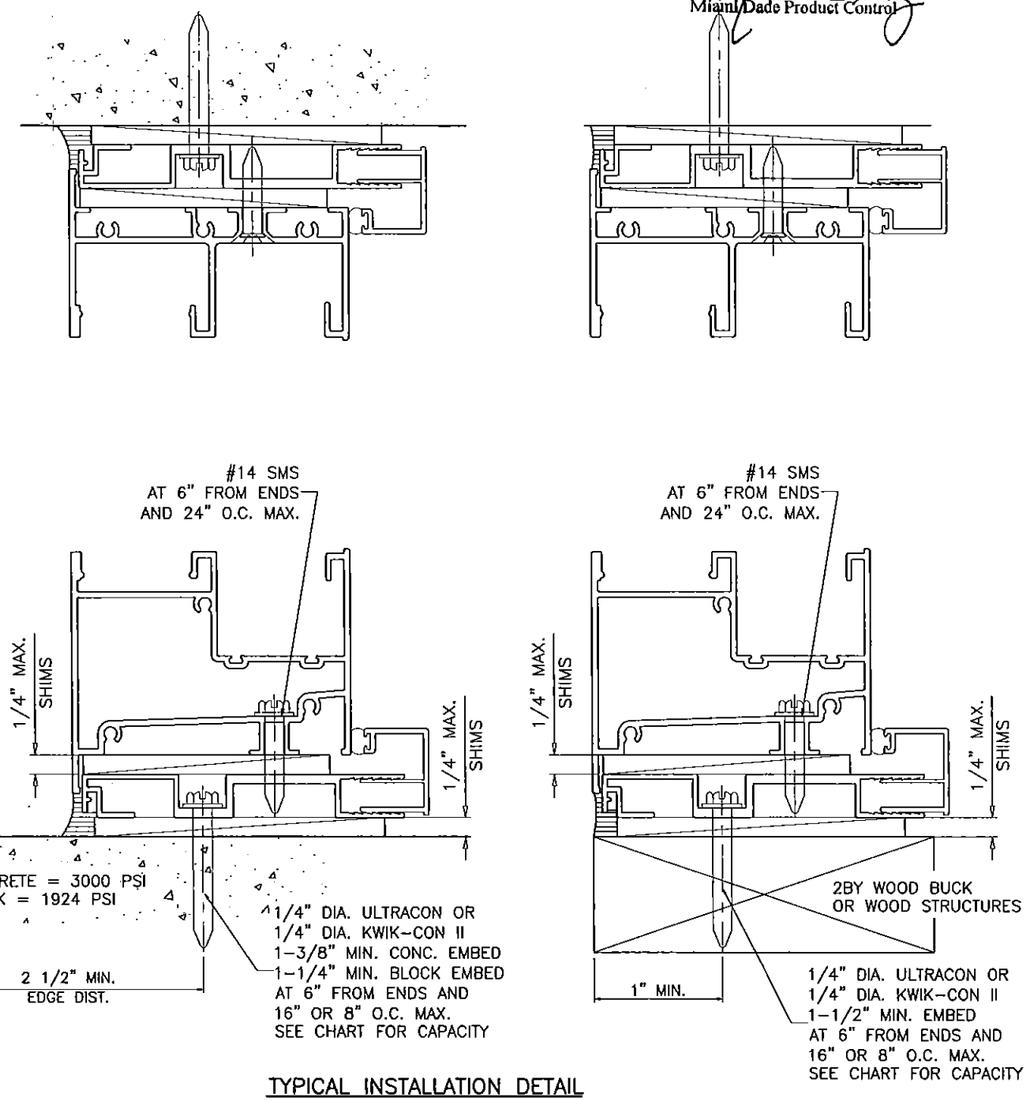

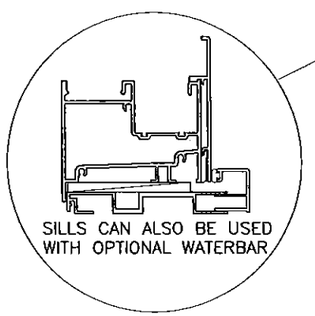

TYPICAL INSTALLATION DETAIL
ON ALL FOUR SIDES/USING ALUMINUM BUCK SYSTEM

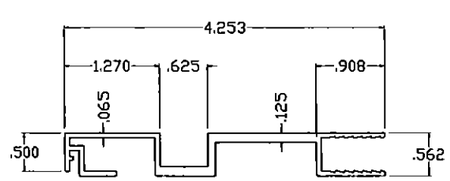

ALUMINUM BUCK
6063-T6

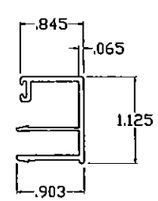

OPTIONAL COVER
6063-T6

Engr: JAVAD AHMAD
CIVIL
FLA. PE # 70592
C.A.N. 3538
AUG 07 2015

AL-FAROOQ CORPORATION
ENGINEERS & PRODUCT DEVELOPMENT
1235 S.W. 87 AVE
MIAMI, FLORIDA 33174
TEL (305) 264-8100 FAX. (305) 262-6978
COMP-ANL\W09-13CGI

SERIES-375 ALUM. HORIZ. ROLLING WDW. (L.M.I.)

CGI WINDOWS & DOORS
10100 N.W. 25TH STREET
MIAMI, FL. 33172
TEL. (305) 593-6590 FAX. (305) 593-6592

revisions:

no	date	by	description
A	01.06.12		CHART REV.
B	02.10.14		NO CHANGE THIS SHEET
C	05.28.14		REV. PER RER COMMENTS
D	05.05.15		NO CHANGE THIS SHEET
E	08.04.15		NO CHANGE THIS SHEET

date: 02-27-09
scale: -
dr. by: -
chk. by:

drawing no.
W09-13

PERFORMANCE VALUES OF ALUMINUM BUCK ANCHORS AT MULLION JOINTS

EXT.(+) & INT.(−)

TRIBUTARY WIDTH	WINDOW HEIGHT	ANCHORS INTO WOOD OR HOLLOW BLOCK			ANCHORS INTO CONCRETE		
		CLUSTER OF 2	CLUSTER OF 4	CLUSTER OF 6	CLUSTER OF 2	CLUSTER OF 4	CLUSTER OF 6
24"	54"	65.8	131.6	150.0	93.3	150.0	150.0
28"		56.4	112.8	150.0	80.0	150.0	150.0
32"		49.3	98.7	148.0	70.0	140.0	150.0
36"		43.9	87.7	131.6	62.2	124.4	150.0
39"		40.5	81.0	121.4	57.4	114.9	150.0
40"		39.5	78.9	118.4	56.0	112.0	150.0
42"		37.6	75.2	112.8	53.3	106.7	150.0
44"		35.9	71.8	107.6	50.9	101.8	150.0
46"		34.3	68.6	103.0	48.7	97.4	146.1
48"		32.9	65.8	98.7	46.7	93.3	140.0
52"		30.4	60.7	91.1	43.1	86.2	129.2
24"	60"	59.2	118.4	150.0	84.0	150.0	150.0
28"		50.7	101.5	150.0	72.0	144.0	150.0
32"		44.4	88.8	133.2	63.0	126.0	150.0
36"		39.5	78.9	118.4	56.0	112.0	150.0
39"		36.4	72.9	109.3	51.7	103.4	150.0
40"		35.5	71.0	106.6	50.4	100.8	150.0
42"		33.8	67.7	101.5	48.0	96.0	144.0
44"		32.3	64.6	96.9	45.8	91.6	137.5
46"		30.9	61.8	92.7	43.8	87.7	131.5
24"	66"	53.8	107.6	150.0	76.4	150.0	150.0
28"		46.1	92.3	138.4	65.5	130.9	150.0
32"		40.4	80.7	121.1	57.3	114.5	150.0
36"		35.9	71.8	107.6	50.9	101.8	150.0
39"		33.1	66.2	99.4	47.0	94.0	141.0
40"		32.3	64.6	96.9	45.8	91.6	137.5
42"		30.8	61.5	92.3	43.6	87.3	130.9
24"	72"	49.3	98.7	148.0	70.0	140.0	150.0
28"		42.3	84.6	126.9	60.0	120.0	150.0
32"		37.0	74.0	111.0	52.5	105.0	150.0
36"		32.9	65.8	98.7	46.7	93.3	140.0
39"		30.4	60.7	91.1	43.1	86.2	129.2
24"	76"	46.7	93.5	140.2	66.3	132.6	150.0
28"		40.1	80.1	120.2	56.8	113.7	150.0
32"		35.1	70.1	105.2	49.7	99.5	149.2
36"		31.2	62.3	93.5	44.2	88.4	132.6

PERFORMANCE VALUES OF ALUMINUM BUCK ANCHORS AT MULLION JOINTS

EXT.(+) & INT.(−)

TRIBUTARY WIDTH	WINDOW HEIGHT	ANCHORS INTO WOOD OR HOLLOW BLOCK			ANCHORS INTO CONCRETE		
		CLUSTER OF 2	CLUSTER OF 4	CLUSTER OF 6	CLUSTER OF 2	CLUSTER OF 4	CLUSTER OF 6
18"	38-3/8"	123.4	150.0	150.0	150.0	150.0	150.0
26-1/2'		83.8	150.0	150.0	118.9	150.0	150.0
37"		60.0	120.1	150.0	85.2	150.0	150.0
44"		50.5	101.0	150.0	71.6	143.3	150.0
56"		39.7	79.3	119.0	56.3	112.6	150.0
71"		31.3	62.6	93.9	44.4	88.8	150.0
18"	50-5/8"	93.6	150.0	150.0	132.7	150.0	150.0
26-1/2'		63.5	127.1	150.0	90.2	150.0	150.0
37"		45.5	91.0	136.5	64.6	129.2	150.0
44"		38.3	76.5	114.8	54.3	108.6	150.0
18"	63"	75.2	150.0	150.0	106.7	150.0	150.0
26-1/2'		51.1	102.1	150.0	72.5	144.9	150.0
37"		36.6	73.1	109.7	51.9	103.8	150.0
44"		30.8	61.5	92.3	43.6	87.3	130.9
18"	72"	65.8	131.6	150.0	93.3	150.0	150.0
26-1/2'		44.7	89.4	134.0	63.4	126.8	150.0
37"		32.0	64.0	96.0	45.4	90.8	136.2
18"	76"	62.3	124.6	150.0	88.4	150.0	150.0
26-1/2'		42.3	84.7	127.0	60.1	120.1	150.0
37"		30.3	60.6	90.9	43.0	86.0	129.0

NOTE: VALUES FROM CHARTS MAY BE INTERPOLATED BETWEEN SIZES

ALL VALUES SHOWN ARE DESIGN PSF
VALUES FOR EXT.(+) LOADS SHOWN ARE FOR SILL WITH WATERBAR ADAPTER.
FOR WINDOWS WITHOUT WATERBAR ADAPTER LIMIT EXT.(+) LOADS TO 80.0 PSF

$$\text{TRIBUTARY WIDTH} = \frac{W1 + W2}{2}$$

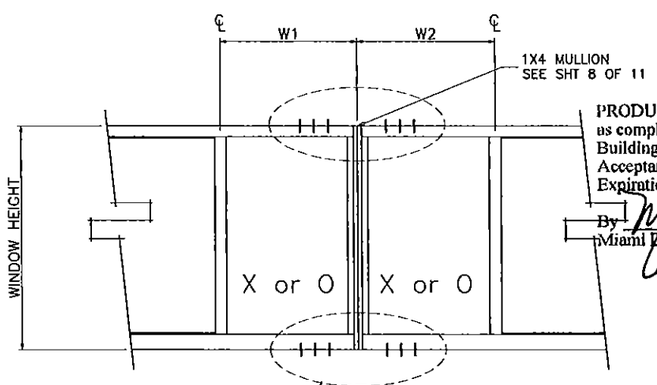

CLUSTER OF 2, 4, OR 6 ANCHORS (SEE CHARTS ABOVE). ALL OTHER BUCK ANCHORS AS PER SHEET 15.

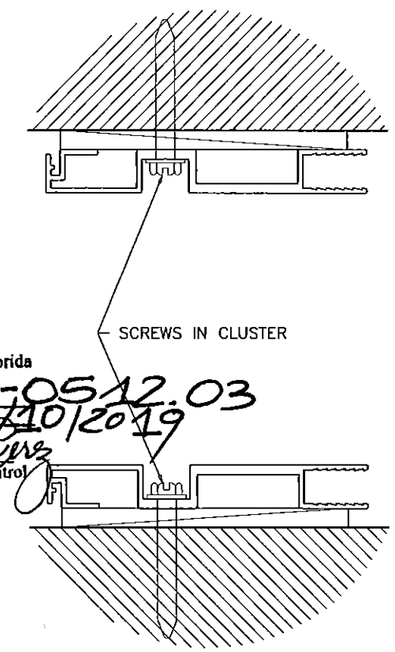

PRODUCT REVISED
as complying with the Florida Building Code
Acceptance No 15-0512.03
Expiration Date 06/10/2019
By Manuel Inz
Miami Dade Product Control

NOTE: ALUMINUM BUCKS ARE SUPPLIED WITH CLUSTER OF 2 (1 SCREW HOLE PER SIDE) STANDARD. EXTRA HOLES MUST BE FIELD DRILLED IF REQUIRED.

Engr: JAVAD AHMAD
CIVIL
FLA. PE # 70592
C.A.N. 3538

AUG 07 2015

ALUMINUM BUCK ANCHORS
ADJACENT TO MULLIONS AT HEAD & SILL
ALL OTHER ALUMINUM BUCK ANCHORS
AS PER SHEET 14

AL-FAROOQ CORPORATION
ENGINEERS & PRODUCT DEVELOPMENT
1235 S.W. 87 AVE
MIAMI, FLORIDA 33174
TEL (305) 264-8100 FAX. (305) 262-6978

COMP-ANL\W09-13CGI

SERIES-375 ALUM. HORIZ. ROLLING WDW. (L.M.I.)

CGI WINDOWS & DOORS
10100 N.W. 25TH STREET
MIAMI, FL. 33172
TEL. (305) 593-6590 FAX. (305) 593-6592

revisions:

no	date	by	description
A	01.06.12		CHART REV.
B	02.10.14		NO CHANGE THIS SHEET
C	05.28.14		REV. PER RER COMMENTS
D	05.05.15		NO CHANGE THIS SHEET
E	08.04.15		NO CHANGE THIS SHEET

date: 02-27-09
scale: -
dr. by: -
chk. by:

drawing no.
W09-13