MIAMI-DADE COUNTY
DEPARTMENT OF REGULATORY AND ECONOMIC RESOURCES (RER)
BOARD AND CODE ADMINISTRATION DIVISION

MIAMI-DADE COUNTY
PRODUCT CONTROL SECTION
11805 SW 26 Street, Room 208
T (786) 315-2590 F (786) 315-2599
www.miamidade.gov/economy

NOTICE OF ACCEPTANCE (NOA)

CGI Windows and Doors, Inc.
10100 NW 25th Street
Miami, FL 33172

SCOPE:

This NOA is being issued under the applicable rules and regulations governing the use of construction materials. The documentation submitted has been reviewed and accepted by Miami-Dade County RER - Product Control Section to be used in Miami Dade County and other areas where allowed by the Authority Having Jurisdiction (AHJ).

This NOA shall not be valid after the expiration date stated below. The Miami-Dade County Product Control Section (In Miami Dade County) and/or the AHJ (in areas other than Miami Dade County) reserve the right to have this product or material tested for quality assurance purposes. If this product or material fails to perform in the accepted manner, the manufacturer will incur the expense of such testing and the AHJ may immediately revoke, modify, or suspend the use of such product or material within their jurisdiction. RER reserves the right to revoke this acceptance, if it is determined by Miami-Dade County Product Control Section that this product or material fails to meet the requirements of the applicable building code.

This product is approved as described herein, and has been designed to comply with the Florida Building Code, including the High Velocity Hurricane Zone.

DESCRIPTION: Series "410" Aluminum Fixed Window - L.M.I.

APPROVAL DOCUMENT: Drawing No. **W08-95**, titled "Series 410 Fixed Window (L.M.I.)", sheets 1 through 9 of 9, dated 12/04/08, with revision E dated 05/01/15, prepared by Al-Farooq Corporation, signed and sealed by Javad Ahmad, P.E., bearing the Miami-Dade County Product Control Revision stamp with the Notice of Acceptance number and expiration date by the Miami-Dade County Product Control Section.

MISSILE IMPACT RATING: Large and Small Missile Impact Resistant.

LABELING: Each unit shall bear a permanent label with the manufacturer's name or logo, city, state, model/series, and following statement: "Miami-Dade County Product Control Approved", unless otherwise noted herein.

RENEWAL of this NOA shall be considered after a renewal application has been filed and there has been no change in the applicable building code negatively affecting the performance of this product.

TERMINATION of this NOA will occur after the expiration date or if there has been a revision or change in the materials, use, and/or manufacture of the product or process. Misuse of this NOA as an endorsement of any product, for sales, advertising or any other purposes shall automatically terminate this NOA. Failure to comply with any section of this NOA shall be cause for termination and removal of NOA.

ADVERTISEMENT: The NOA number preceded by the words Miami-Dade County, Florida, and followed by the expiration date may be displayed in advertising literature. If any portion of the NOA is displayed, then it shall be done in its entirety.

INSPECTION: A copy of this entire NOA shall be provided to the user by the manufacturer or its distributors and shall be available for inspection at the job site at the request of the Building Official.

This NOA **revises NOA# 14-0224.14** and consists of this page 1 and evidence pages E-1, E-2 and E-3, as well as approval document mentioned above.

The submitted documentation was reviewed by **Manuel Perez, P.E.**

MIAMI-DADE COUNTY APPROVED

8/27/15

CGI Windows and Doors, Inc.

NOTICE OF ACCEPTANCE: EVIDENCE SUBMITTED

A. DRAWINGS

1. Manufacturer's die drawings and sections.
   (Submitted under NOA No.09-0127.17)
2. Drawing No **W08-95**, titled "Series 410 Fixed Window (L.M.I.)", sheets 1 through 9 of 9, dated 12/04/08, with revision E dated 05/01/15, prepared by Al-Farooq Corporation, signed and sealed by Javad Ahmad, P.E.

B. TESTS

1. Test reports on: 1) Uniform Static Air Pressure Test, Loading per FBC TAS 202-94
   2) Large Missile Impact Test per FBC, TAS 201-94
   3) Cyclic Wind Pressure Loading per FBC, TAS 203-94
   along with marked-up drawings and installation diagram of a series 7500 PVC fixed window, to qualify DuPont "Butacite" PVB interlayer, Duraseal® and Super Spacer® insulating glass spacer, prepared by Certified Test Laboratories, Test Report No. **CTLA-3056 WA**, dated 03/03/15, signed and sealed by Ramesh C. Patel, P.E.
2. Test reports on: 1) Uniform Static Air Pressure Test, Loading per FBC TAS 202-94
   2) Large Missile Impact Test per FBC, TAS 201-94
   3) Cyclic Wind Pressure Loading per FBC, TAS 203-94
   along with marked-up drawings and installation diagram of a series 7400 PVC project out window, to qualify DuPont "Butacite" PVB interlayer, Duraseal® and Super Spacer® insulating glass spacer, prepared by Certified Test Laboratories, Test Report No. **CTLA-3056 WB**, dated 03/03/15, signed and sealed by Ramesh C. Patel, P.E.
3. Test reports on: 1) Uniform Static Air Pressure Test, Loading per FBC TAS 202-94
   2) Large Missile Impact Test per FBC, TAS 201-94
   3) Cyclic Wind Pressure Loading per FBC, TAS 203-94
   along with marked-up drawings and installation diagram of a series 238 aluminum fixed window, to qualify DuPont "Butacite" PVB interlayer, Duraseal® and Super Spacer® insulating glass spacer, prepared by Certified Test Laboratories, Test Report No. **CTLA-3056 WC**, dated 04/16/15, signed and sealed by Ramesh C. Patel, P.E.
4. Test reports on: 1) Large Missile Impact Test per FBC, TAS 201-94
   2) Cyclic Wind Pressure Loading per FBC, TAS 203-94
   along with marked-up drawings and installation diagram of aluminum fixed windows, prepared by Hurricane Test Laboratory, LLC, Test Report No. **HTL-0080-0504-08**, (Specimen 15) dated 12/18/08, signed and sealed by Vinu J. Abraham, P.E.
   (Submitted under NOA No.09-0127.17)

Manuel Perez

Manuel Perez, P.E.
Product Control Examiner
NOA No. 15-0512.12
Expiration Date: June 03, 2019
Approval Date: September 03 2015

NOTICE OF ACCEPTANCE: EVIDENCE SUBMITTED

B. TESTS (CONTINUED)

5. Test reports on: 1) Air Infiltration Test, per FBC, TAS 202-94
2) Uniform Static Air Pressure Test, Loading per FBC TAS 202-94
3) Water Resistance Test, per FBC, TAS 202-94
4) Large Missile Impact Test per FBC, TAS 201-94
5) Small Missile Impact Test per FBC, TAS 201-94
6) Cyclic Wind Pressure Loading per FBC, TAS 203-94

along with marked-up drawings and installation diagram of aluminum fixed windows, prepared by Hurricane Test Laboratory, LLC, Test Report No. **HTL-0080-0504-08**, dated 11/13/08, signed and sealed by Vinu J. Abraham, P.E.
(Submitted under NOA No.09-0127.17)

C. CALCULATIONS

1. Anchor verification calculations and structural analysis, complying with **FBC-5th Edition (2014)**, dated 06/03/14, prepared by Al-Farooq Corporation, signed and sealed by Javad Ahmad, P.E.
(Submitted under previous NOA No.14-0224.14)

2. Glazing complies with **ASTM E1300-09**

D. QUALITY ASSURANCE

1. Miami-Dade Department of Regulatory and Economic Resources (RER).

E. MATERIAL CERTIFICATIONS

1. Notice of Acceptance No. **14-0916.11** issued to **Kuraray America, Inc.** for their **"SentryGlas® (Clear and White) Glass Interlayers"** dated 06/25/15, expiring on 07/04/18.

2. Notice of Acceptance No. **14-0423.15** issued to **Eastman Chemical Company (MA)** for their **"Saflex CP – Saflex and Saflex HP Composite Glass Interlayers with PET Core"** dated 06/19/14, expiring on 12/11/18.

Manuel Perez, P.E.
Product Control Examiner
NOA No. 15-0512.12
Expiration Date: June 03, 2019
Approval Date: September 03 2015

F. STATEMENTS

1. Statement letter of conformance, complying with **FBC-5th Edition (2014)**, and of no financial interest, dated 06/05/14, issued by Al-Farooq Corporation, signed and sealed by Javad Ahmad, P.E.
   (Submitted under previous NOA No.14-0224.14)
2. Laboratory compliance letters for Test Report No. **HTL-0080-0504-08** (Specimen 15), issued by Hurricane Test Laboratory, Inc., dated 12/18/08, signed and sealed by Vinu J. Abraham, P.E.
   (Submitted under NOA No. 09-0127.17)
3. Laboratory compliance letters for Test Report No. **HTL-0080-0504-08**, issued by Hurricane Test Laboratory, Inc., dated 11/13/08, signed and sealed by Vinu J. Abraham, P.E.
   (Submitted under NOA No. 09-0127.17)
4. Test Proposal for the qualification of ***Butacite®*** PVB glass interlayer by DuPont as well as ***Duraseal®*** and ***Super Spacer® Standard*** warm-edge flexible insulating glass spacers, dated December 16, 2014, issued by RER, Product Control Section, signed by Jaime Gascon, P.E., Supervisor, Product Control Section.

G. OTHERS

1. Notice of Acceptance No. **14-0224.14**, issued to CGI Windows & Doors for their Series "410" Aluminum Fixed Window - L.M.I. approved on 06/12/14 and expiring on 06/03/19.

Manuel Perez, P.E.
Product Control Examiner
NOA No. 15-0512.12
Expiration Date: June 03, 2019
Approval Date: September 03 2015

AVAILABLE FRAME TYPES

Same frame used on all four sides

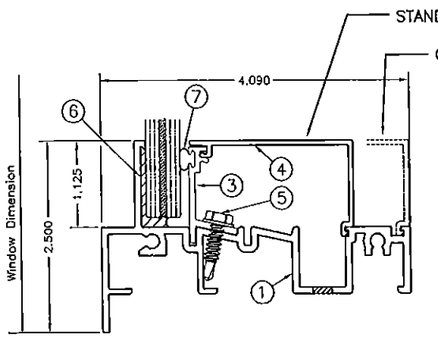

FLANGE FRAME
LAMINATED GLASS

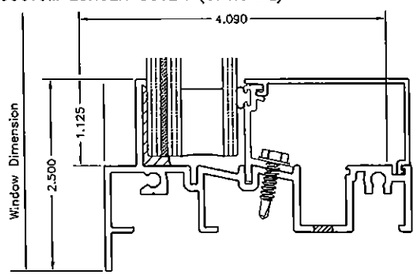

FLANGE FRAME
INSULATED LAMINATED GLASS

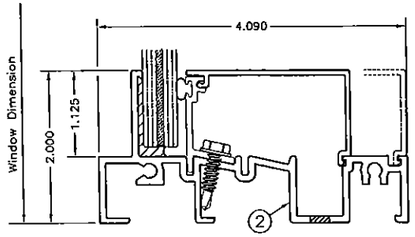

EQUAL LEG FRAME
LAMINATED GLASS

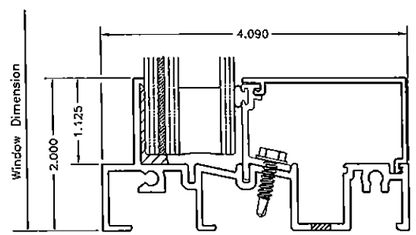

EQUAL LEG FRAME
INSULATED LAMINATED GLASS

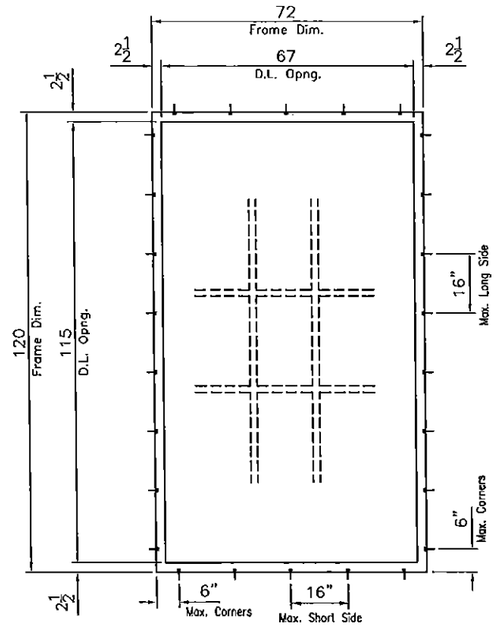

TYPICAL ELEVATION
FLANGE FRAME

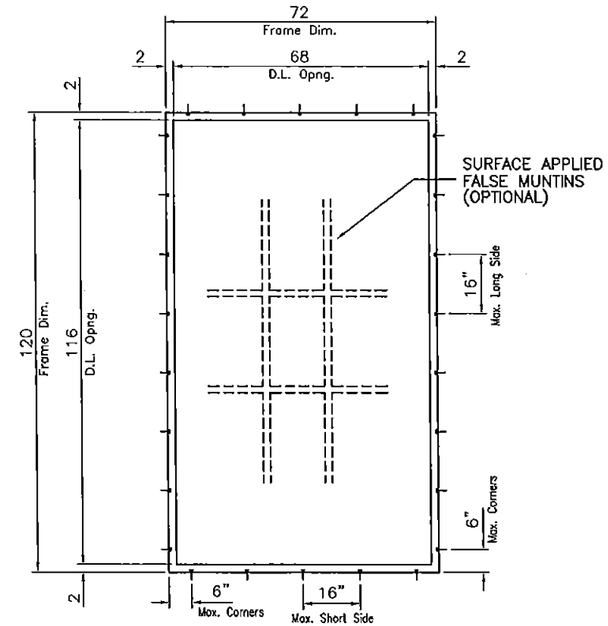

TYPICAL ELEVATION
EQUAL LEG FRAME

SERIES 410 FIXED WINDOWS

APPROVAL APPLIES TO SINGLE UNITS OR SIDE BY SIDE COMBINATIONS OF FIX./FIX. OR FIXED WITH OTHER MIAMI–DADE COUNTY APPROVED WINDOWS USING MIAMI–DADE COUNTY APPROVED MULLIONS IN BETWEEN.
LOWER DESIGN PRESSURE FROM WINDOWS OR MULLION APPROVAL WILL APPLY TO ENTIRE SYSTEM.

THIS PRODUCT HAS BEEN DESIGNED AND TESTED TO COMPLY WITH THE REQUIREMENTS OF THE FLORIDA BUILDING CODE INCLUDING HIGH VELOCITY HURRICANE ZONE (HVHZ).

WOOD BUCKS BY OTHERS, MUST BE ANCHORED PROPERLY TO TRANSFER LOADS TO THE STRUCTURE.

ANCHORS SHALL BE AS LISTED, SPACED AS SHOWN ON DETAILS, ANCHORS EMBEDMENT TO BASE MATERIAL SHALL BE BEYOND WALL DRESSING OR STUCCO.

ANCHORING OR LOADING CONDITIONS NOT SHOWN IN THESE DETAILS ARE NOT PART OF THIS APPROVAL.

A LOAD DURATION INCREASE IS USED IN DESIGN OF ANCHORS INTO WOOD ONLY.

MATERIALS INCLUDING BUT NOT LIMITED TO STEEL/METAL SCREWS, THAT COME INTO CONTACT WITH OTHER DISSIMILAR MATERIALS SHALL MEET THE REQUIREMENTS OF THE FLORIDA BLDG. CODE.

INSTRUCTIONS FOR USING CAPACITY CHARTS:

STEP 1 DETERMINE THE REQUIRED DESIGN PRESSURES FOR A GIVEN WINDOW OPENING.

STEP 2 DETERMINE THE CAPACITY OF THE WINDOW SIZE/CONFIGURATION/GLASS TYPE FROM CHARTS ON SHEETS 2 AND 3.
FOR INSTALLATION ANCHOR TYPES SEE SHEET 4.

STEP 3 IF ALUMINUM BUCKS ARE USED, VERIFY THE BUCK INSTALLATION CAPACITY FROM SHEET 8.

STEP 4 FOR UNCLIPPED MULLED WINDOWS DETERMINE MULLION CAPACITY FOR 1X4 AND 2X6 TUBES FROM CHARTS ON SHEETS 5 & 7.

STEP 5 FOR MULLION ANCHOR CAPACITY SEE CHART ON SHEET 6.

THE LOWEST SELECTED VALUE APPLY TO THE INSTALLATION AND MUST EQUAL OR EXCEED THE REQUIRED DESIGN PRESSURES OBTAINED FROM STEP 1.

THESE WINDOWS ARE RATED FOR LARGE & SMALL MISSILE IMPACT. SHUTTERS ARE NOT REQUIRED.

Engr: JAVAD AHMAD
CIVIL
FLA. PE # 70592
C.A.N. 3538

MAY 27 2015

PRODUCT REVISED
as complying with the Florida
Building Code
Acceptance No 15-0512.12
Expiration Date June 3, 2019
By Manuel Perez
Miami-Dade Product Control

AL-FAROOQ CORPORATION
ENGINEERS & PRODUCT DEVELOPMENT
1235 S.W. 87 AVE
MIAMI, FLORIDA 33174
TEL. (305) 264-8100 FAX. (305) 262-6978

COMP–ANL\W08–95CGI

SERIES 410 FIXED WINDOW (L.M.I.)

CGI WINDOWS & DOORS
10100 N.W. 25TH STREET
MIAMI, FL. 33172
TEL. (305) 593–6590 FAX. (305) 593–6592

revisions:

no	date	by	description
A	04.06.09		NO CHANGE THIS SHEET
B	12.29.11		UPDATED TO 2010 FBC
C	02.10.14		NO CHANGE THIS SHEET
D	06.03.14		REV. PER RER COMMENTS
E	05.01.15		NO CHANGE THIS SHEET

date: 12–04–08
scale: –
dr. by: –
chk. by:

drawing no.
W08–95

DESIGN LOAD CAPACITY – PSF									
		GLASS TYPE 1				GLASS TYPE 2			
		ANCHOR OPTION 1		ANCHOR OPTION 2		ANCHOR OPTION 1		ANCHOR OPTION 2	
DIM. 1 INCHES	DIM. 2 INCHES	EXT.(+)	INT.(–)	EXT.(+)	INT.(–)	EXT.(+)	INT.(–)	EXT.(+)	INT.(–)
30	48	120.0	150.0	120.0	150.0	133.0	150.0	133.0	150.0
36		120.0	150.0	120.0	150.0	133.0	150.0	133.0	150.0
42		120.0	128.4	120.0	128.4	133.0	150.0	133.0	150.0
48		116.5	116.5	116.5	116.5	133.0	150.0	133.0	150.0
51		110.4	110.4	110.4	110.4	133.0	150.0	133.0	150.0
54		105.9	105.9	105.9	105.9	133.0	137.6	133.0	150.0
57		100.6	100.6	100.6	100.6	125.1	125.1	133.0	150.0
60		95.7	95.7	95.7	95.7	114.7	114.7	133.0	150.0
63		91.1	91.1	91.1	91.1	132.3	132.3	133.0	150.0
66		86.8	86.8	86.8	86.8	122.9	122.9	130.6	147.3
69		82.8	82.8	82.8	82.8	114.7	114.7	127.5	143.8
72		77.3	77.3	77.3	77.3	107.5	107.5	124.7	140.6
30	54	120.0	150.0	120.0	150.0	133.0	150.0	133.0	150.0
36		120.0	132.3	120.0	132.3	133.0	150.0	133.0	150.0
42		115.5	115.5	115.5	115.5	133.0	143.0	133.0	150.0
48		105.9	105.9	105.9	105.9	133.0	137.6	133.0	150.0
51		101.5	101.5	101.5	101.5	133.0	136.3	133.0	150.0
54		97.3	97.3	97.3	97.3	133.0	135.9	133.0	150.0
57		92.7	92.7	92.7	92.7	122.3	122.3	133.0	150.0
60		88.5	88.5	88.5	88.5	111.2	111.2	133.0	150.0
63		84.4	84.4	84.4	84.4	127.4	127.4	129.3	145.8
66		80.6	80.6	80.6	80.6	117.6	117.6	125.0	141.0
69		77.1	77.1	77.1	77.1	109.2	109.2	118.9	118.9
72		73.9	73.9	73.9	73.9	101.9	101.9	118.9	118.9
30	60	120.0	146.8	120.0	150.0	133.0	146.8	133.0	150.0
36		120.0	121.1	120.0	121.1	131.0	131.0	133.0	150.0
42		104.8	104.8	104.8	104.8	121.0	121.0	133.0	150.0
48		95.7	95.7	95.7	95.7	114.7	114.7	133.0	150.0
51		91.9	91.9	91.9	91.9	112.6	112.6	133.0	150.0
54		88.5	88.5	88.5	88.5	111.2	111.2	133.0	150.0
57		85.8	85.8	85.8	85.8	110.4	110.4	133.0	150.0
60		82.8	82.8	82.8	82.8	110.1	110.1	133.0	150.0
63		79.4	79.4	79.4	79.4	107.0	107.0	107.0	107.0
66		76.2	76.2	76.2	76.2	107.0	107.0	107.0	107.0
69		75.0	75.0	75.0	75.0	105.8	105.8	107.0	107.0
72		72.0	72.0	72.0	72.0	98.3	98.3	107.0	107.0
30	66	120.0	145.8	120.0	145.8	133.0	150.0	133.0	150.0
36		111.2	111.2	111.2	111.2	133.0	143.3	133.0	150.0
42		95.6	95.6	95.6	95.6	131.0	131.0	133.0	150.0
48		86.8	86.8	86.8	86.8	122.9	122.9	130.6	147.3
51		82.7	82.7	82.7	82.7	119.9	119.9	127.5	143.8
54		80.6	80.6	80.6	80.6	117.6	117.6	125.0	141.0
57		78.4	78.4	78.4	78.4	112.6	112.6	112.8	112.8
60		76.2	76.2	76.2	76.2	107.0	107.0	107.0	107.0
63		75.2	75.2	75.2	75.2	101.9	101.9	101.9	101.9
66		72.4	72.4	72.4	72.4	97.3	97.3	97.3	97.3
69		69.8	69.8	69.8	69.8	97.3	97.3	97.3	97.3
72		67.4	67.4	67.4	67.4	96.2	96.2	97.3	97.3
30	72	120.0	138.1	120.0	138.1	133.0	144.8	133.0	150.0
38		103.2	103.2	103.2	103.2	127.4	127.4	133.0	150.0
42		87.2	87.2	87.2	87.2	115.6	115.6	133.0	150.0
48		77.3	77.3	77.3	77.3	107.5	107.5	124.7	140.6
51		75.6	75.6	75.6	75.6	104.4	104.4	125.9	125.9
54		73.9	73.9	73.9	73.9	101.9	101.9	118.9	118.9
57		74.5	74.5	74.5	74.5	99.9	99.9	112.6	112.6
60		72.0	72.0	72.0	72.0	98.3	98.3	107.0	107.0
63		69.6	69.6	69.6	69.6	97.1	97.1	101.9	101.9
66		67.4	67.4	67.4	67.4	96.2	96.2	97.3	97.3
69		66.0	66.0	66.0	66.0	93.0	93.0	93.0	93.0
72		63.4	63.4	63.4	63.4	89.2	89.2	89.2	89.2

DESIGN LOAD CAPACITY – PSF									
		GLASS TYPE 1				GLASS TYPE 2			
		ANCHOR OPTION 1		ANCHOR OPTION 2		ANCHOR OPTION 1		ANCHOR OPTION 2	
DIM. 1 INCHES	DIM. 2 INCHES	EXT.(+)	INT.(–)	EXT.(+)	INT.(–)	EXT.(+)	INT.(–)	EXT.(+)	INT.(–)
30	78	120.0	130.9	120.0	130.9	133.0	150.0	133.0	150.0
36		97.0	97.0	97.0	97.0	133.0	137.6	133.0	150.0
42		80.0	80.0	80.0	80.0	124.2	124.2	130.0	146.6
48		71.1	71.1	71.1	71.1	114.7	114.7	132.8	132.8
51		69.6	69.6	69.6	69.6	111.0	111.0	125.9	125.9
54		70.7	70.7	70.7	70.7	107.9	107.9	118.9	118.9
57		68.4	68.4	68.4	68.4	105.3	105.3	112.6	112.6
60		66.4	66.4	66.4	66.4	103.2	103.2	107.0	107.0
63		65.4	65.4	65.4	65.4	101.9	101.5	101.9	101.9
66		63.4	63.4	63.4	63.4	97.3	97.3	97.3	97.3
69		61.3	61.3	61.3	61.3	93.0	93.0	93.0	93.0
72		59.3	59.3	59.3	59.3	89.2	89.2	89.2	89.2
30	84	120.0	125.7	120.0	125.7	133.0	143.6	133.0	150.0
36		91.6	91.6	91.6	91.6	125.1	125.1	133.0	150.0
42		70.7	70.7	70.7	70.7	112.3	112.3	126.7	141.4
48		66.1	66.1	66.1	66.1	103.2	103.2	128.7	128.7
51		67.4	67.4	67.4	67.4	99.6	99.6	124.3	124.3
54		64.8	64.8	64.8	64.8	96.6	96.6	118.9	118.9
57		62.9	62.9	62.9	62.9	94.0	94.0	112.6	112.6
60		62.0	62.0	62.0	62.0	91.7	91.7	107.0	107.0
63		60.3	60.3	60.3	60.3	89.9	89.9	101.9	101.9
66		58.6	58.6	58.6	58.6	88.3	88.3	97.3	97.3
69		–	–	–	–	75.0	75.0	75.0	75.0
72		–	–	–	–	75.0	75.0	75.0	75.0
30	90	120.0	125.2	120.0	125.2	132.1	132.1	133.0	150.0
36		86.7	86.7	86.7	86.7	114.7	114.7	133.0	150.0
42		67.7	67.7	67.7	67.7	102.6	102.6	133.0	135.5
48		65.2	65.2	65.2	65.2	93.8	93.8	125.4	125.4
51		62.1	62.1	62.1	62.1	90.4	90.4	120.8	120.8
54		59.8	59.8	59.8	59.8	87.4	87.4	116.8	116.8
57		58.7	58.7	58.7	58.7	84.8	84.8	112.6	112.6
60		57.0	57.0	57.0	57.0	82.6	82.6	107.0	107.0
63		55.2	55.2	55.2	55.2	80.6	80.6	101.9	101.9
66		–	–	–	–	75.0	75.0	75.0	75.0
69		–	–	–	–	75.0	75.0	75.0	75.0
72		–	–	–	–	75.0	75.0	75.0	75.0
30	96	120.0	123.6	120.0	123.6	133.0	142.7	133.0	150.0
36		77.3	77.3	77.3	77.3	123.5	123.5	133.0	150.0
42		65.2	65.2	65.2	65.2	110.1	110.1	130.5	130.5
48		60.6	60.6	60.6	60.6	100.3	100.3	121.3	121.3
51		58.6	58.6	58.6	58.6	96.4	96.4	117.3	117.3
54		56.0	56.0	56.0	56.0	93.1	93.1	112.0	112.0
57		54.0	54.0	54.0	54.0	90.1	90.1	107.9	107.9
60		51.8	51.8	51.8	51.8	87.6	87.6	103.6	103.6
63		–	–	–	–	75.0	75.0	75.0	75.0
66		–	–	–	–	75.0	75.0	75.0	75.0
69		–	–	–	–	75.0	75.0	75.0	75.0
72		–	–	–	–	75.0	75.0	75.0	75.0
30	102	120.0	121.3	120.0	121.3	132.9	132.9	133.0	150.0
38		75.8	75.8	75.8	75.8	114.7	114.7	133.0	148.9
42		65.7	65.7	65.7	65.7	101.9	101.9	131.3	131.3
48		56.9	56.9	56.9	56.9	92.6	92.6	113.7	113.7
51		54.4	54.4	54.4	54.4	88.9	88.9	108.7	108.7
54		51.9	51.9	51.9	51.9	85.6	85.6	103.8	103.8
57		–	–	–	–	75.0	75.0	75.0	75.0
60		–	–	–	–	75.0	75.0	75.0	75.0
63		–	–	–	–	75.0	75.0	75.0	75.0
66		–	–	–	–	75.0	75.0	75.0	75.0
69		–	–	–	–	74.5	74.5	75.0	75.0
72		–	–	–	–	73.0	73.0	75.0	75.0

DESIGN LOAD CAPACITY – PSF									
		GLASS TYPE 1				GLASS TYPE 2			
		ANCHOR OPTION 1		ANCHOR OPTION 2		ANCHOR OPTION 1		ANCHOR OPTION 2	
DIM. 1 INCHES	DIM. 2 INCHES	EXT.(+)	INT.(–)	EXT.(+)	INT.(–)	EXT.(+)	INT.(–)	EXT.(+)	INT.(–)
30	108	118.2	118.2	118.2	118.2	124.3	124.3	133.0	150.0
36		76.1	76.1	76.1	76.1	107.0	107.0	133.0	147.1
42		62.4	62.4	62.4	62.4	94.9	94.9	124.8	124.8
48		54.0	54.0	54.0	54.0	86.0	86.0	108.0	108.0
51		50.8	50.8	50.8	50.8	82.4	82.4	101.7	101.7
54		–	–	–	–	75.0	75.0	75.0	75.0
57		–	–	–	–	75.0	75.0	75.0	75.0
60		–	–	–	–	74.1	74.1	75.0	75.0
63		–	–	–	–	71.9	71.9	75.0	75.0
66		–	–	–	–	70.1	70.1	75.0	75.0
69		–	–	–	–	68.4	68.4	75.0	75.0
72		–	–	–	–	66.9	66.9	75.0	75.0
30	114	114.6	114.6	114.6	114.6	133.0	133.4	133.0	150.0
36		76.0	76.0	76.0	76.0	114.7	114.7	133.0	145.6
42		59.6	59.6	59.6	59.6	101.5	101.5	119.2	119.2
48		51.1	51.1	51.1	51.1	91.7	91.7	102.2	102.2
51		–	–	–	–	75.0	75.0	75.0	75.0
54		–	–	–	–	75.0	75.0	75.0	75.0
57		–	–	–	–	75.0	75.0	75.0	75.0
60		–	–	–	–	75.0	75.0	75.0	75.0
63		–	–	–	–	75.0	75.0	75.0	75.0
66		–	–	–	–	74.1	74.1	75.0	75.0
69		–	–	–	–	72.2	72.2	75.0	75.0
72		–	–	–	–	70.6	70.6	75.0	75.0
30	120	110.9	110.9	110.9	110.9	125.8	125.8	133.0	150.0
36		75.8	75.8	75.8	75.8	107.9	107.9	133.0	144.2
42		57.5	57.5	57.5	57.5	95.3	95.3	115.0	115.0
48		48.5	48.5	48.5	48.5	86.0	86.0	97.0	97.0
51		–	–	–	–	75.0	75.0	75.0	75.0
54		–	–	–	–	75.0	75.0	75.0	75.0
57		–	–	–	–	75.0	75.0	75.0	75.0
60		–	–	–	–	73.4	73.4	75.0	75.0
63		–	–	–	–	71.1	71.1	75.0	75.0
66		–	–	–	–	69.0	69.0	75.0	75.0
69		–	–	–	–	67.2	67.2	75.0	75.0
72		–	–	–	–	65.5	65.5	75.0	75.0

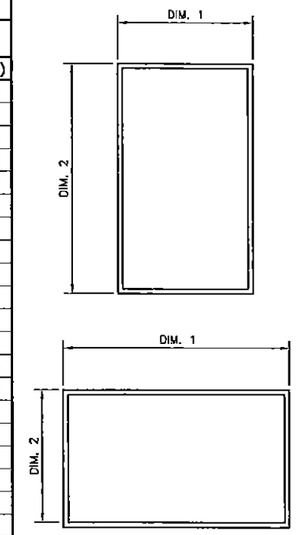

NOTE
LONG AND SHORT DIMENSIONS CAN BE ORIENTED VERICALLY OR HORIZONTALLY AS SHOWN.

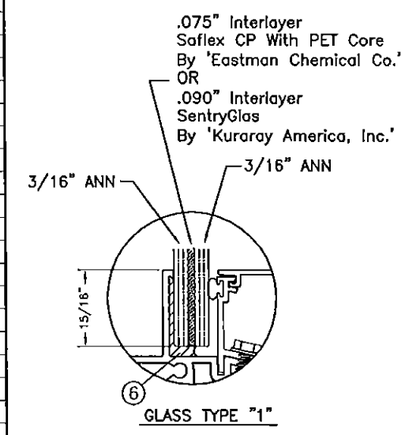

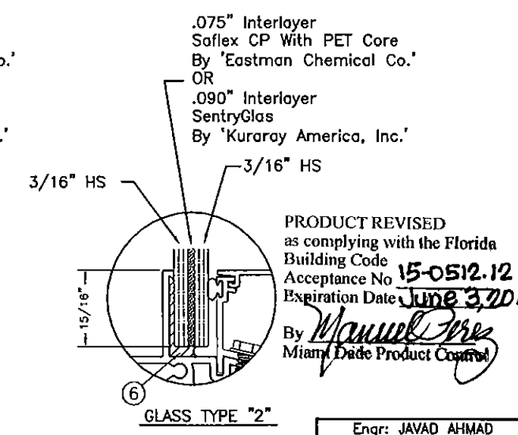

GLASS TYPES AVAILABLE

PRODUCT REVISED
as complying with the Florida Building Code
Acceptance No 15-0512.12
Expiration Date June 3, 2019
By Manuel Perez
Miami Dade Product Control

Engr: JAVAD AHMAD
CIVIL
FLA. PE # 70592
C.A.N. 3538

MAY 27 2015

NOTE:
GLASS CAPACITIES ON THIS SHEET ARE BASED ON ASTM E1300–09 (3 SEC. GUSTS).

FOR ANCHOR OPTIONS SEE SHEET 4

AL-FAROOQ CORPORATION
ENGINEERS & PRODUCT DEVELOPMENT
1235 S.W. 87 AVE
MIAMI, FLORIDA 33174
TEL (305) 264-8100 FAX. (305) 262-6978

COMP–ANL\W08–95CGI

SERIES 410 FIXED WINDOW (L.M.I.)

CGI WINDOWS & DOORS
10100 N.W. 25TH STREET
MIAMI, FL. 33172
TEL. (305) 593–6590 FAX. (305) 593–6592

revisions:

no	date	by	description
A	04.06.09		NO CHANGE THIS SHEET
B	12.29.11		UPDATED TO 2010 FBC
C	02.10.14		INTERLAYER NAMES REV.
D	06.03.14		REV. PER RER COMMENTS
E	05.01.15		NO CHANGE THIS SHEET

date: 12–04–08
scale: –
dr. by: –
chk. by:

drawing no.
W08–95

DESIGN LOAD CAPACITY – PSF

DIM. 1 INCHES	DIM. 2 INCHES	GLASS TYPE 1A ANCHOR OPTION 1 EXT.(+)	GLASS TYPE 1A ANCHOR OPTION 1 INT.(–)	GLASS TYPE 1A ANCHOR OPTION 2 EXT.(+)	GLASS TYPE 1A ANCHOR OPTION 2 INT.(–)	GLASS TYPE 2A ANCHOR OPTION 1 EXT.(+)	GLASS TYPE 2A ANCHOR OPTION 1 INT.(–)	GLASS TYPE 2A ANCHOR OPTION 2 EXT.(+)	GLASS TYPE 2A ANCHOR OPTION 2 INT.(–)
30		120.0	150.0	120.0	150.0	133.0	150.0	133.0	150.0
36		120.0	150.0	120.0	150.0	133.0	150.0	133.0	150.0
42		120.0	124.6	120.0	124.6	133.0	150.0	133.0	150.0
48		113.1	113.1	113.1	113.1	133.0	150.0	133.0	150.0
51		107.2	107.2	107.2	107.2	133.0	150.0	133.0	150.0
54	48	102.9	102.9	102.9	102.9	133.0	137.8	133.0	150.0
57		97.7	97.7	97.7	97.7	125.1	125.1	133.0	150.0
60		92.9	92.9	92.9	92.9	114.7	114.7	133.0	150.0
63		88.4	88.4	88.4	88.4	132.3	132.3	133.0	150.0
66		84.3	84.3	84.3	84.3	122.9	122.9	130.6	147.3
69		80.4	80.4	80.4	80.4	114.7	114.7	127.5	143.8
72		75.1	75.1	75.1	75.1	107.5	107.5	124.7	140.6
30		120.0	150.0	120.0	150.0	133.0	150.0	133.0	150.0
36		120.0	128.4	120.0	128.4	133.0	150.0	133.0	150.0
42		112.2	112.2	112.2	112.2	133.0	143.0	133.0	150.0
48		102.9	102.9	102.9	102.9	133.0	137.6	133.0	150.0
51		98.5	98.5	98.5	98.5	133.0	136.3	133.0	150.0
54	54	94.5	94.5	94.5	94.5	133.0	135.9	133.0	150.0
57		90.0	90.0	90.0	90.0	122.3	122.3	133.0	150.0
60		85.9	85.9	85.9	85.9	111.2	111.2	133.0	150.0
63		82.0	82.0	82.0	82.0	127.4	127.4	129.3	145.8
66		78.2	78.2	78.2	78.2	117.6	117.6	125.0	141.0
69		74.9	74.9	74.9	74.9	109.2	109.2	118.9	118.9
72		71.7	71.7	71.7	71.7	101.9	101.9	118.9	118.9
30		120.0	149.5	120.0	149.5	133.0	146.8	133.0	150.0
36		117.6	117.6	117.6	117.6	131.0	131.0	133.0	150.0
42		101.7	101.7	101.7	101.7	121.0	121.0	133.0	150.0
48		92.9	92.9	92.9	92.9	114.7	114.7	133.0	150.0
51		89.2	89.2	89.2	89.2	112.6	112.6	133.0	150.0
54	60	85.9	85.9	85.9	85.9	111.2	111.2	133.0	150.0
57		83.3	83.3	83.3	83.3	110.4	110.4	133.0	150.0
60		80.4	80.4	80.4	80.4	110.1	110.1	133.0	150.0
63		77.0	77.0	77.0	77.0	107.0	107.0	107.0	107.0
66		74.0	74.0	74.0	74.0	107.0	107.0	107.0	107.0
69		72.9	72.9	72.9	72.9	105.8	105.8	107.0	107.0
72		69.9	69.9	69.9	69.9	98.3	98.3	107.0	107.0
30		120.0	141.6	120.0	141.6	133.0	150.0	133.0	150.0
36		108.0	108.0	108.0	108.0	133.0	143.3	133.0	150.0
42		92.8	92.8	92.8	92.8	131.0	131.0	133.0	150.0
48		84.3	84.3	84.3	84.3	122.9	122.9	130.6	147.3
51		80.3	80.3	80.3	80.3	119.9	119.9	127.5	143.8
54	66	78.2	78.2	78.2	78.2	117.6	117.6	125.0	141.0
57		76.1	76.1	76.1	76.1	112.6	112.6	112.6	112.6
60		74.0	74.0	74.0	74.0	107.0	107.0	107.0	107.0
63		73.0	73.0	73.0	73.0	101.9	101.9	101.9	101.9
66		70.3	70.3	70.3	70.3	97.3	97.3	97.3	97.3
69		67.8	67.8	67.8	67.8	97.3	97.3	97.3	97.3
72		65.5	65.5	65.5	65.5	96.2	96.2	97.3	97.3
30		120.0	134.1	120.0	134.1	133.0	144.8	133.0	150.0
36		100.2	100.2	100.2	100.2	127.4	127.4	133.0	150.0
42		84.7	84.7	84.7	84.7	115.6	115.6	133.0	150.0
48		75.1	75.1	75.1	75.1	107.5	107.5	124.7	140.6
51		73.4	73.4	73.4	73.4	104.4	104.4	125.9	125.9
54	72	71.7	71.7	71.7	71.7	101.9	101.9	118.9	118.9
57		72.3	72.3	72.3	72.3	99.9	99.9	112.6	112.6
60		69.9	69.9	69.9	69.9	98.3	98.3	107.0	107.0
63		67.6	67.6	67.6	67.6	97.1	97.1	101.9	101.9
66		65.5	65.5	65.5	65.5	96.2	96.2	97.3	97.3
69		64.1	64.1	64.1	64.1	93.0	93.0	93.0	93.0
72		61.6	61.6	61.6	61.6	89.2	89.2	89.2	89.2

DESIGN LOAD CAPACITY – PSF

DIM. 1 INCHES	DIM. 2 INCHES	GLASS TYPE 1A ANCHOR OPTION 1 EXT.(+)	GLASS TYPE 1A ANCHOR OPTION 1 INT.(–)	GLASS TYPE 1A ANCHOR OPTION 2 EXT.(+)	GLASS TYPE 1A ANCHOR OPTION 2 INT.(–)	GLASS TYPE 2A ANCHOR OPTION 1 EXT.(+)	GLASS TYPE 2A ANCHOR OPTION 1 INT.(–)	GLASS TYPE 2A ANCHOR OPTION 2 EXT.(+)	GLASS TYPE 2A ANCHOR OPTION 2 INT.(–)
30		120.0	127.1	120.0	127.1	133.0	150.0	133.0	150.0
36		94.1	94.1	94.1	94.1	133.0	137.6	133.0	150.0
42		77.6	77.6	77.6	77.6	124.2	124.2	130.0	146.6
48		69.1	69.1	69.1	69.1	114.7	114.7	132.8	132.8
51		67.5	67.5	67.5	67.5	111.0	111.0	125.9	125.9
54	78	68.6	68.6	68.6	68.6	107.9	107.9	118.9	118.9
57		66.4	66.4	66.4	66.4	105.3	105.3	112.6	112.6
60		64.4	64.4	64.4	64.4	103.2	103.2	107.0	107.0
63		63.5	63.5	63.5	63.5	101.5	101.5	101.9	101.9
66		61.6	61.6	61.6	61.6	97.3	97.3	97.3	97.3
69		59.5	59.5	59.5	59.5	93.0	93.0	93.0	93.0
72		57.6	57.6	57.6	57.6	89.2	89.2	89.2	89.2
30		120.0	122.1	120.0	122.1	133.0	143.6	133.0	150.0
36		88.9	88.9	88.9	88.9	125.1	125.1	133.0	150.0
42		68.7	68.7	68.7	68.7	112.3	112.3	126.7	142.9
48		64.2	64.2	64.2	64.2	103.2	103.2	128.3	128.3
51		65.4	65.4	65.4	65.4	99.6	99.6	124.3	124.3
54	84	62.9	62.9	62.9	62.9	96.6	96.6	118.9	118.9
57		61.1	61.1	61.1	61.1	94.0	94.0	112.6	112.6
60		60.2	60.2	60.2	60.2	91.7	91.7	107.0	107.0
63		58.5	58.5	58.5	58.5	89.9	89.9	101.9	101.9
66		56.9	56.9	56.9	56.9	88.3	88.3	97.3	97.3
69		–	–	–	–	75.0	75.0	75.0	75.0
72		–	–	–	–	75.0	75.0	75.0	75.0
30		120.0	121.6	120.0	121.6	132.1	132.1	133.0	150.0
36		84.1	84.1	84.1	84.1	114.7	114.7	133.0	150.0
42		65.8	65.8	65.8	65.8	102.6	102.6	131.5	131.5
48		63.3	63.3	63.3	63.3	93.8	93.8	125.4	125.4
51		60.3	60.3	60.3	60.3	90.4	90.4	120.6	120.6
54	90	58.1	58.1	58.1	58.1	87.4	87.4	116.8	116.8
57		57.0	57.0	57.0	57.0	84.8	84.8	112.6	112.6
60		55.3	55.3	55.3	55.3	82.6	82.6	107.0	107.0
63		53.6	53.6	53.6	53.6	80.6	80.6	101.9	101.9
66		–	–	–	–	75.0	75.0	75.0	75.0
69		–	–	–	–	75.0	75.0	75.0	75.0
72		–	–	–	–	75.0	75.0	75.0	75.0
30		120.0	120.0	120.0	120.0	133.0	142.7	133.0	150.0
36		75.1	75.1	75.1	75.1	123.5	123.5	133.0	150.0
42		63.3	63.3	63.3	63.3	110.1	110.1	126.7	126.7
48		58.9	58.9	58.9	58.9	100.3	100.3	120.0	120.0
51		56.9	56.9	56.9	56.9	96.4	96.4	117.8	117.8
54	96	54.4	54.4	54.4	54.4	93.1	93.1	113.7	113.7
57		52.4	52.4	52.4	52.4	90.1	90.1	110.1	110.1
60		50.3	50.3	50.3	50.3	87.6	87.6	106.2	106.2
63		–	–	–	–	75.0	75.0	75.0	75.0
66		–	–	–	–	75.0	75.0	75.0	75.0
69		–	–	–	–	75.0	75.0	75.0	75.0
72		–	–	–	–	75.0	75.0	75.0	75.0
30		117.7	117.7	117.7	117.7	132.9	132.9	133.0	150.0
36		73.6	73.8	73.6	73.6	114.7	114.7	133.0	147.2
42		63.8	63.8	63.8	63.8	101.9	101.9	127.5	127.5
48		55.2	55.2	55.2	55.2	92.6	92.6	116.5	116.5
51		52.8	52.8	52.8	52.8	88.9	88.9	111.4	111.4
54	102	50.4	50.4	50.4	50.4	85.6	85.6	106.4	106.4
57		–	–	–	–	75.0	75.0	75.0	75.0
60		–	–	–	–	75.0	75.0	75.0	75.0
63		–	–	–	–	75.0	75.0	75.0	75.0
66		–	–	–	–	75.0	75.0	75.0	75.0
69		–	–	–	–	74.5	74.5	75.0	75.0
72		–	–	–	–	73.0	73.0	75.0	75.0

DESIGN LOAD CAPACITY – PSF

DIM. 1 INCHES	DIM. 2 INCHES	GLASS TYPE 1A ANCHOR OPTION 1 EXT.(+)	GLASS TYPE 1A ANCHOR OPTION 1 INT.(–)	GLASS TYPE 1A ANCHOR OPTION 2 EXT.(+)	GLASS TYPE 1A ANCHOR OPTION 2 INT.(–)	GLASS TYPE 2A ANCHOR OPTION 1 EXT.(+)	GLASS TYPE 2A ANCHOR OPTION 1 INT.(–)	GLASS TYPE 2A ANCHOR OPTION 2 EXT.(+)	GLASS TYPE 2A ANCHOR OPTION 2 INT.(–)
30		114.8	114.8	114.8	114.8	124.3	124.3	133.0	150.0
36		73.8	73.8	73.8	73.8	107.0	107.0	133.0	147.1
42		60.6	60.6	60.6	60.6	94.9	94.9	121.1	121.1
48		52.4	52.4	52.4	52.4	86.0	86.0	110.6	110.6
51		49.3	49.3	49.3	49.3	82.4	82.4	104.2	104.2
54	108	–	–	–	–	75.0	75.0	75.0	75.0
57		–	–	–	–	75.0	75.0	75.0	75.0
60		–	–	–	–	74.1	74.1	75.0	75.0
63		–	–	–	–	71.9	71.9	75.0	75.0
66		–	–	–	–	70.1	70.1	75.0	75.0
69		–	–	–	–	68.4	68.4	75.0	75.0
72		–	–	–	–	66.9	66.9	75.0	75.0
30		111.3	111.3	111.3	111.3	133.0	133.4	133.0	150.0
36		73.8	73.8	73.8	73.8	114.7	114.7	133.0	145.6
42		57.9	57.9	57.9	57.9	101.5	101.5	120.0	120.0
48		49.6	49.6	49.6	49.6	91.7	91.7	104.7	104.7
51		–	–	–	–	75.0	75.0	75.0	75.0
54	114	–	–	–	–	75.0	75.0	75.0	75.0
57		–	–	–	–	75.0	75.0	75.0	75.0
60		–	–	–	–	75.0	75.0	75.0	75.0
63		–	–	–	–	75.0	75.0	75.0	75.0
66		–	–	–	–	74.1	74.1	75.0	75.0
69		–	–	–	–	72.2	72.2	75.0	75.0
72		–	–	–	–	70.6	70.6	75.0	75.0
30		107.7	107.7	107.7	107.7	125.8	125.8	133.0	150.0
36		73.6	73.6	73.6	73.6	107.9	107.9	133.0	144.2
42		55.8	55.8	55.8	55.8	95.3	95.3	117.8	117.8
48		47.1	47.1	47.1	47.1	86.0	86.0	99.5	99.5
51		–	–	–	–	75.0	75.0	75.0	75.0
54	120	–	–	–	–	75.0	75.0	75.0	75.0
57		–	–	–	–	75.0	75.0	75.0	75.0
60		–	–	–	–	73.4	73.4	75.0	75.0
63		–	–	–	–	71.1	71.1	75.0	75.0
66		–	–	–	–	69.0	69.0	75.0	75.0
69		–	–	–	–	67.2	67.2	75.0	75.0
72		–	–	–	–	65.5	65.5	75.0	75.0

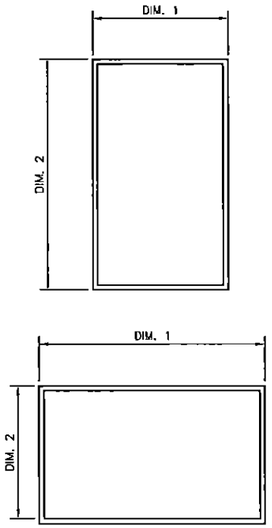

NOTE
LONG AND SHORT DIMENSIONS CAN BE ORIENTED VERICALLY OR HORIZONTALLY AS SHOWN.

PRODUCT REVISED
as complying with the Florida Building Code
Acceptance No 15-0512.12
Expiration Date June 3, 2019
By Manuel Perez
Miami-Dade Product Control

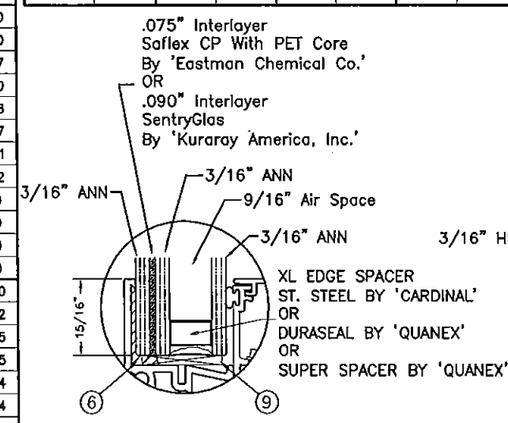

GLASS TYPE "1A"

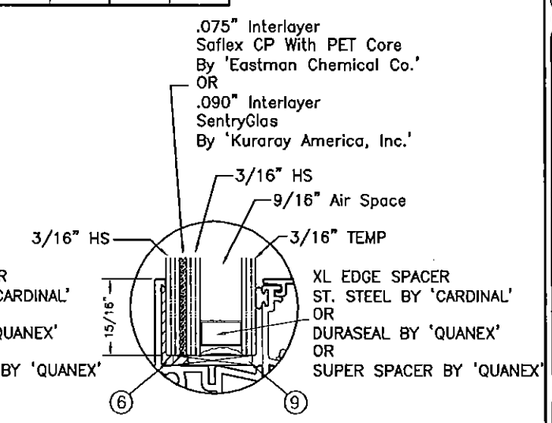

GLASS TYPE "2A"

GLASS TYPES AVAILABLE

NOTE:
GLASS CAPACITIES ON THIS SHEET ARE BASED ON ASTM E1300–09 (3 SEC. GUSTS).

FOR ANCHOR OPTIONS SEE SHEET 4

Engr: JAVAD AHMAD
CML
FLA. PE # 70592
C.A.N. 2538

MAY 27 2015

AL-FAROOQ CORPORATION
ENGINEERS & PRODUCT DEVELOPMENT
1235 S.W. 87 AVE
MIAMI, FLORIDA 33174
TEL. (305) 264-8100 FAX. (305) 262-6978

COMP–ANL\W08–95CGI

SERIES 410 FIXED WINDOW (L.M.I.)

CGI WINDOWS & DOORS
10100 N.W. 25TH STREET
MIAMI, FL. 33172
TEL. (305) 593–6590 FAX. (305) 593–6592

revisions:

no	date	by	description
A	04.06.09		NO CHANGE THIS SHEET
B	12.29.11		UPDATED TO 2010 FBC
C	02.10.14		INTERLAYER NAMES REV.
D	06.03.14		REV. PER RER COMMENTS
E	05.01.15		SPACER REV.

date: 12–04–08
scale: –
dr. by: –
chk. by:

drawing no.
W08–95

TYPICAL INSTALLATION DETAILS

THESE DETAILS ARE TYPICAL ON ALL FOUR SIDES OF WINDOW

INSTALLATION DETAILS THRU 1X WOOD BUCKS INTO CONCRETE

FLANGE

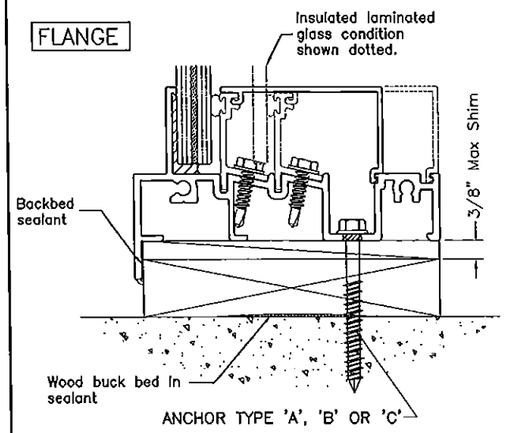

EQUAL LEG

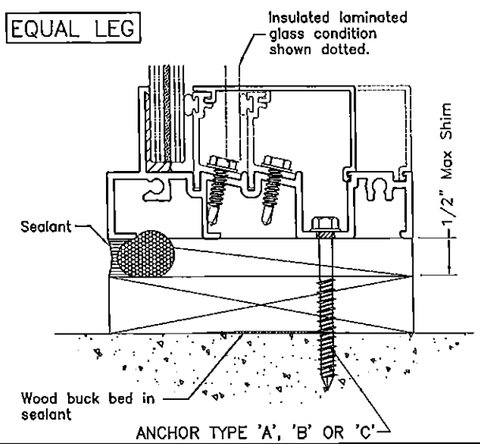

INSTALLATION DETAILS INTO 2X WOOD BUCKS OR INTO WOOD STRUCTURES

FLANGE

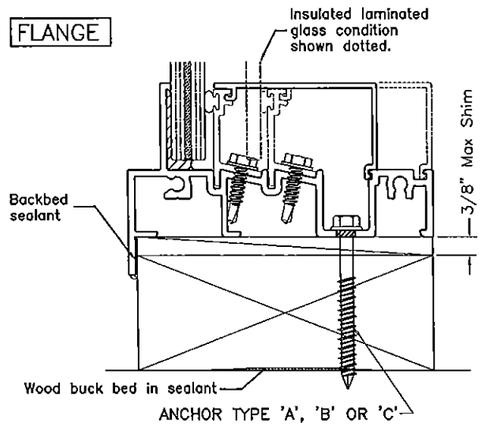

EQUAL LEG

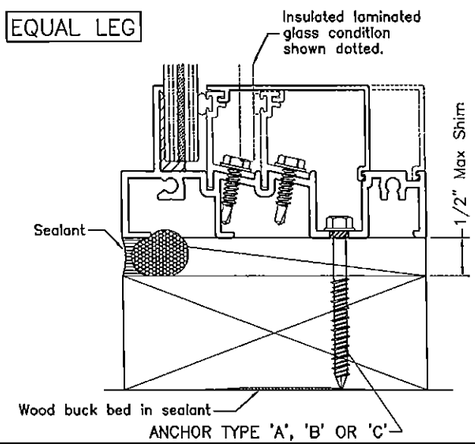

INSTALLATION DETAILS DIRECTLY INTO CONCRETE

FLANGE

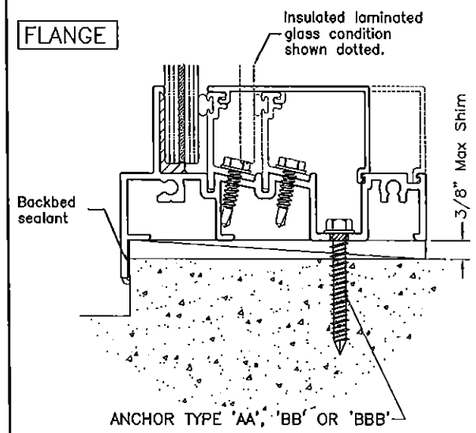

EQUAL LEG

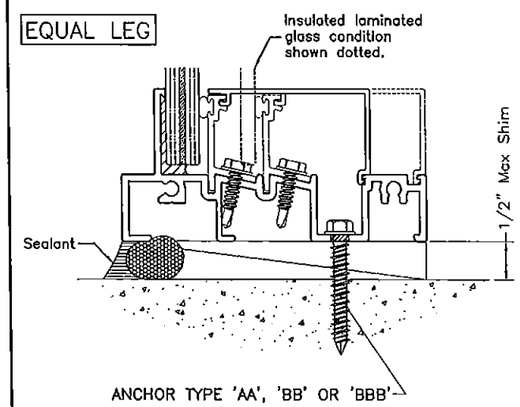

INSTALLATION DETAILS INTO METAL STRUCTURES OR INTO APPROVED MULLIONS

FLANGE

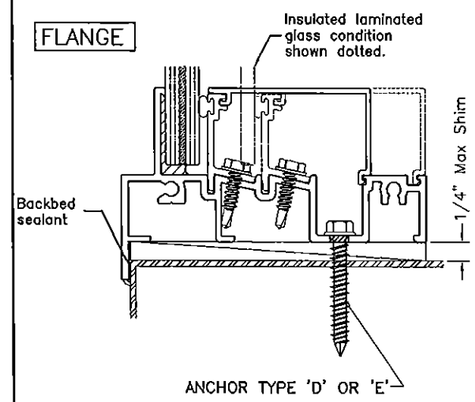

EQUAL LEG

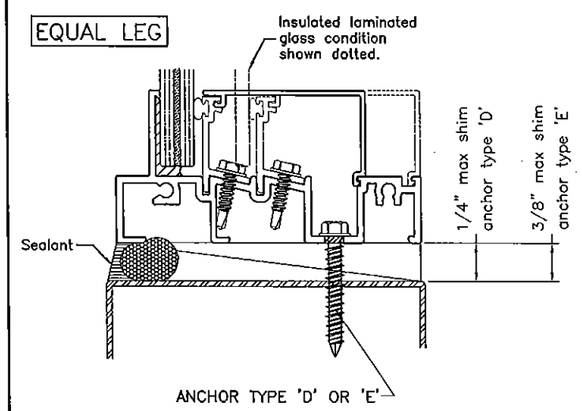

TYPICAL ANCHORS: SEE ELEV. FOR SPACING

TYPE 'A'

1/4" DIA. HILTI KWIK-CON II (Fu=163 KSI, Fy=157 KSI)

INTO 2BY WOOD BUCKS OR WOOD STRUCTURES
1-1/2" MIN. PENETRATION INTO WOOD

THRU 1BY BUCKS INTO CONC. OR MASONRY
1-1/2" MIN. EMBED INTO CONC. OR MASONRY

TYPE 'AA'

1/4" DIA. HILTI KWIK-CON II (Fu=163 KSI, Fy=157 KSI)

DIRECTLY INTO CONCRETE
1-1/2" MIN. EMBED INTO CONCRETE

TYPE 'B'

1/4" DIA. ULTRACON BY 'ELCO' (Fu=177 KSI, Fy=155 KSI)

INTO 2BY WOOD BUCKS OR WOOD STRUCTURES
1-1/2" MIN. PENETRATION INTO WOOD

THRU 1BY BUCKS INTO CONC. OR MASONRY
1-1/4" MIN. EMBED INTO CONC. OR MASONRY

TYPE 'BB'

1/4" DIA. ULTRACON BY 'ELCO' (Fu=177 KSI, Fy=155 KSI)

DIRECTLY INTO CONC. OR MASONRY
1-1/2" MIN. EMBED INTO CONC. OR MASONRY

TYPE 'BBB'

1/4" DIA. ULTRACON BY 'ELCO' (Fu=177 KSI, Fy=155 KSI)

DIRECTLY INTO MASONRY BLOCK
1-1/2" MIN. EMBED INTO MASONRY

TYPE 'C'

5/16" DIA. ULTRACON BY 'ELCO' (Fu=177 KSI, Fy=155 KSI)

INTO 2BY WOOD BUCKS OR WOOD STRUCTURES
1-1/2" MIN. PENETRATION INTO WOOD

THRU 1BY BUCKS INTO CONC. OR MASONRY
1-1/2" MIN. EMBED INTO CONC. OR MASONRY

TYPE 'D'

#14 SMS (GRADE 2 CRS)

INTO METAL STRUCTURES
STEEL : 12 GA. MIN. (Fy = 36 KSI MIN.)
ALUMINUM : 1/8" THK. MIN. (6063-T5 MIN.)

TYPE 'E'

1/4" DRIL-FLEX SELF DRILLING SCREWS (GRADE 2 CRS)

INTO METAL STRUCTURES
STEEL : 12 GA. MIN. (Fy = 36 KSI MIN.)
ALUMINUM : 1/8" THK. MIN. (6063-T5 MIN.)

(STEEL IN CONTACT WITH ALUMINUM TO BE PLATED OR PAINTED)
INTO MIAMI-DADE COUNTY APPROVED MULLIONS (MIN. THK. = .090")

ANCHOR OPTION I:

ALL ANCHORS AS SHOWN ABOVE.

ANCHOR OPTION II:

ANCHOR TYPES 'A', 'AA' & 'C' WITH 1/2" SHIM SPACE
ANCHOR TYPES 'B', 'BB', 'BBB', 'D' & 'E' WITH 1/4" SHIM SPACE

TYPICAL EDGE DISTANCE

INTO CONCRETE AND MASONRY = 2-1/2" MIN.
INTO WOOD STRUCTURE = 1" MIN.
INTO METAL STRUCTURE = 3/4" MIN.

CONCRETE f'c = 3000 PSI MIN.
MASONRY f'm = 1924 PSI MIN.

Engr: JAVAD AHMAD
CIVIL
FLA. PE # 70592
C.A.N. 3538

MAY 27 2015

PRODUCT REVISED
as complying with the Florida Building Code
Acceptance No 15-0512.12
Expiration Date June 3, 2019
By Manuel Perez
Miami-Dade Product Control

AL-FAROOQ CORPORATION
ENGINEERS & PRODUCT DEVELOPMENT
1235 S.W. 87 AVE
MIAMI, FLORIDA 33174
TEL. (305) 264-8100 FAX. (305) 262-6978
COMP-ANL\W08-95CGI

SERIES 410 FIXED WINDOW (L.M.I.)

CGI WINDOWS & DOORS
10100 N.W. 25TH STREET
MIAMI, FL. 33172
TEL. (305) 593-6590 FAX. (305) 593-6592

revisions:

no	date	by	description
A	04.05.09		NO CHANGE THIS SHEET
B	12.29.11		NO CHANGE THIS SHEET
C	02.10.14		NO CHANGE THIS SHEET
D	06.03.14		REV. PER RER COMMENTS
E	05.01.15		NO CHANGE THIS SHEET

date: 12-04-08
scale: -
dr. by: -
chk. by:

drawing no.
W08-95

DESIGN LOAD CAPACITY – PSF (MULLION)			
WINDOW DIMS.		1" X 4" X 1/8" ALUM TUBE	2" X 6" X 1/8" ALUM TUBE
WIDTH	LENGTH	EXT.(+) & INT.(–)	EXT.(+) & INT.(–)
36"	72"	150.0	150.0
42"		150.0	150.0
48"		150.0	150.0
54"		148.1	150.0
60"		133.3	150.0
66"		121.2	136.4
72"		111.1	125.0
36"	84"	150.0	150.0
42"		142.1	150.0
48"		127.9	150.0
54"		117.6	142.9
60"		110.0	128.6
66"		103.9	116.9
72"		–	107.1
36"	96"	116.8	150.0
42"		102.3	150.0
48"		91.8	140.6
54"		83.9	125.0
60"		78.1	112.5
66"		–	102.3
72"		–	93.8
36"	102"	–	150.0
42"		–	150.0
48"		–	132.4
54"		–	117.6
60"		–	105.9
66"		–	96.3
72"		–	88.2
36"	108"	–	150.0
42"		–	134.5
48"		–	119.6
54"		–	108.3
60"		–	99.6
66"		–	90.9
72"		–	83.3
36"	114"	–	137.5
42"		–	119.3
48"		–	105.9
54"		–	95.7
60"		–	87.8
66"		–	81.5
72"		–	76.6
36"	120"	–	122.3
42"		–	106.2
48"		–	94.4
54"		–	85.2
60"		–	78.0
66"		–	72.2
72"		–	67.7

ANY SIZE OR DESIGN LOAD LESS THAN CHART IS ALLOWED.

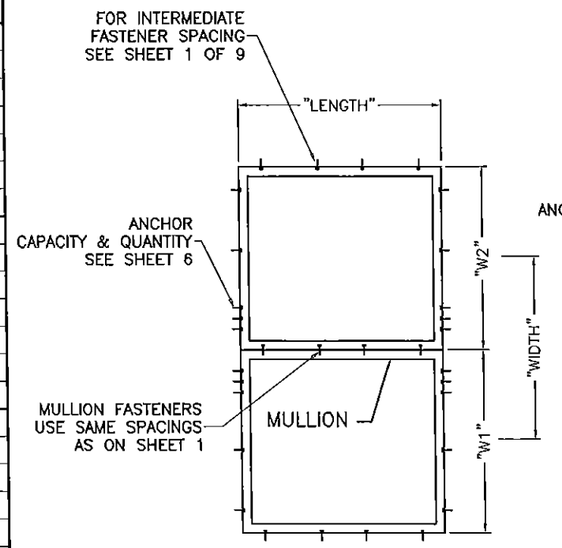

TYPICAL ELEVATION

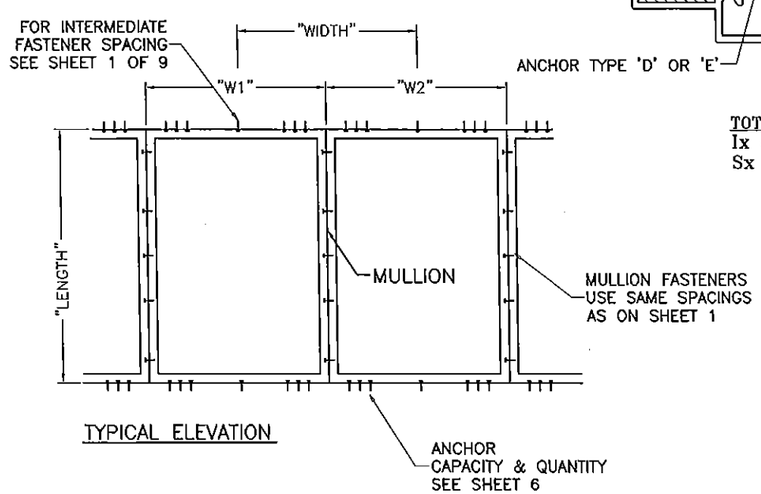

TYPICAL ELEVATION

$$\text{Width} = \frac{W1 + W2}{2}$$

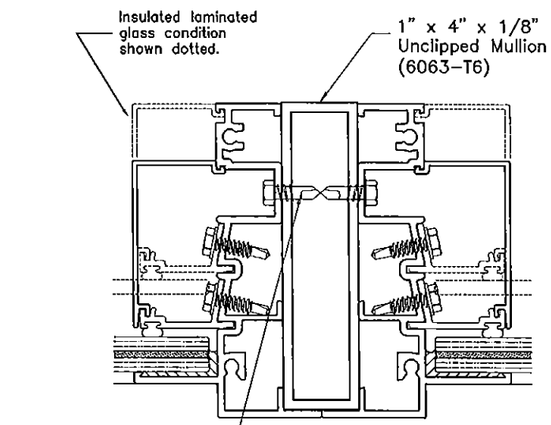

TOTAL PRPERTIES
Ix = 6.0368 IN\4
Sx = 2.6884 IN\3

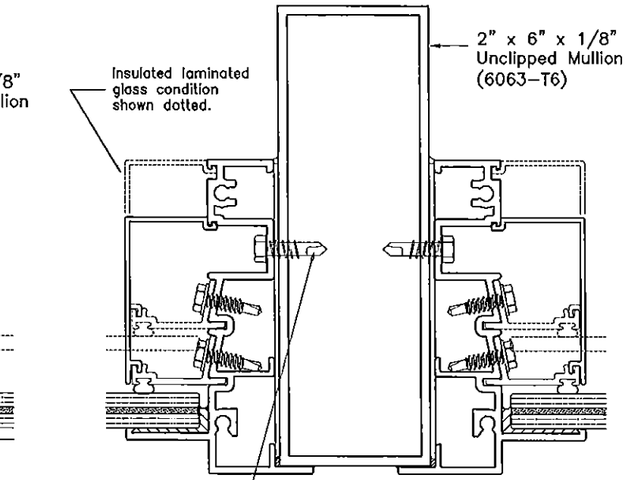

TOTAL PRPERTIES
Ix = 12.2758 IN\4
Sx = 4.0919 IN\3

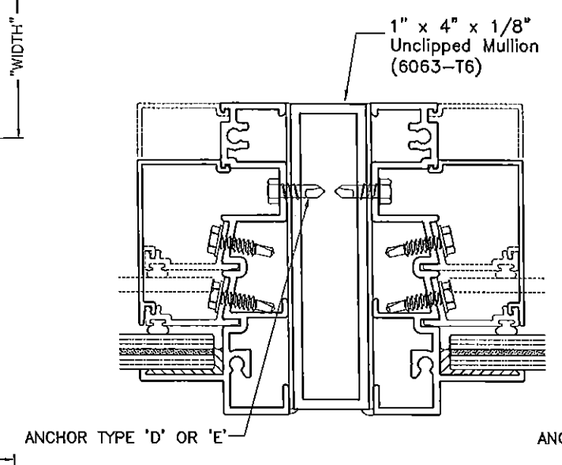

TOTAL PRPERTIES
Ix = 5.7328 IN\4
Sx = 2.6455 IN\3

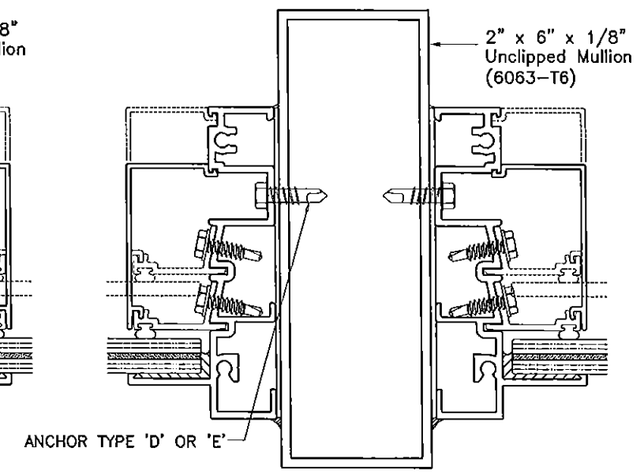

TOTAL PRPERTIES
Ix = 11.9718 IN\4
Sx = 3.9906 IN\3

Engr: JAVAD AHMAD
CIVIL
FLA. PE # 70592
C.A.N. 3538

MAY 27 2015

PRODUCT REVISED
as complying with the Florida Building Code
Acceptance No 15-0512.12
Expiration Date June 3, 2019
By Manuel Perez
Miami Dade Product Control

AL-FAROOQ CORPORATION
ENGINEERS & PRODUCT DEVELOPMENT
1235 S.W. 87 AVE
MIAMI, FLORIDA 33174
TEL. (305) 264-8100 FAX. (305) 262-6978
COMP-ANL\W08-95CGI

SERIES 410 FIXED WINDOW (L.M.I.)

CGI WINDOWS & DOORS
10100 N.W. 25TH STREET
MIAMI, FL. 33172
TEL. (305) 593-6590 FAX. (305) 593-6592

revisions:

no	date	by	description
A	04.06.09		REV. PER BCCO COMMENTS
B	12.29.11		UPDATED TO 2010 FBC
C	02.10.14		PROPERTIES ADDED
D	06.03.14		NO CHANGE THIS SHEET
E	05.01.15		NO CHANGE THIS SHEET

date: 12-04-08
scale: –
dr. by: –
chk. by:

drawing no.
W08-95

DESIGN LOAD CAPACITY - PSF (ANCHORS AT EACH SIDE OF MULLION)

WINDOW DIMS.		ANCHOR TYPE 'A'			ANCHORS 'A', 'AA', 'B'			ANCHORS 'AA', 'BB'		ANCHOR TYPE 'AA'		ANCHOR TYPE 'B'			ANCHORS 'B', 'BB', 'BBB'			ANCHORS 'B', 'BB', 'BBB'			ANCHORS 'D', 'E'		ANCHOR TYPE 'E'			ANCHOR TYPE 'BBB'		
		3/8" SHIM			1/2" SHIM			1/4" SHIM		3/8" SHIM		1/4" SHIM			3/8" SHIM			1/2" SHIM			1/4" SHIM		3/8" SHIM			1/4" SHIM		
WIDTH	LENGTH	2/ SIDE	3/ SIDE	4/ SIDE	2/ SIDE	3/ SIDE	4/ SIDE	2/ SIDE	3/ SIDE	2/ SIDE	3/ SIDE	2/ SIDE	3/ SIDE	4/ SIDE	2/ SIDE	3/ SIDE	4/ SIDE	2/ SIDE	3/ SIDE	4/ SIDE	2/ SIDE	3/ SIDE	2/ SIDE	3/ SIDE	4/ SIDE	2/ SIDE	3/ SIDE	4/ SIDE
36"	72"	150.0	150.0	150.0	143.4	150.0	150.0	150.0	150.0	150.0	150.0	150.0	150.0	150.0	126.8	150.0	150.0	101.9	150.0	150.0	150.0	150.0	147.6	150.0	150.0	150.0	150.0	150.0
42"		150.0	150.0	150.0	130.2	150.0	150.0	150.0	150.0	150.0	150.0	137.7	150.0	150.0	115.1	150.0	150.0	92.5	138.8	150.0	150.0	150.0	133.9	150.0	150.0	150.0	150.0	150.0
48"		141.5	150.0	150.0	121.0	150.0	150.0	150.0	150.0	149.0	150.0	128.0	150.0	150.0	107.0	150.0	150.0	86.0	129.0	150.0	150.0	150.0	124.5	150.0	150.0	148.5	150.0	150.0
54"		134.2	150.0	150.0	114.7	150.0	150.0	150.0	150.0	141.3	150.0	121.4	150.0	150.0	101.5	150.0	150.0	81.5	122.3	150.0	150.0	150.0	118.0	150.0	150.0	140.8	150.0	150.0
60"		129.4	150.0	150.0	110.6	150.0	150.0	150.0	150.0	138.2	150.0	117.0	150.0	150.0	97.8	146.7	150.0	78.6	117.9	150.0	150.0	150.0	113.8	150.0	150.0	135.8	150.0	150.0
66"		126.7	150.0	150.0	108.3	150.0	150.0	150.0	150.0	133.4	150.0	114.6	150.0	150.0	95.8	143.7	150.0	77.0	115.5	150.0	150.0	150.0	111.4	150.0	150.0	132.9	150.0	150.0
72"		125.8	150.0	150.0	107.6	150.0	150.0	150.0	150.0	132.4	150.0	113.8	150.0	150.0	95.1	142.7	150.0	76.4	114.7	150.0	150.0	150.0	110.7	150.0	150.0	132.0	150.0	150.0
36"	84"	137.2	150.0	150.0	117.3	150.0	150.0	150.0	150.0	144.5	150.0	124.1	150.0	150.0	103.8	150.0	150.0	83.4	125.1	150.0	150.0	150.0	120.7	150.0	150.0	144.0	150.0	150.0
42"		123.2	150.0	150.0	105.4	150.0	150.0	150.0	150.0	129.7	150.0	111.5	150.0	150.0	93.2	139.8	150.0	74.9	112.3	149.8	150.0	150.0	108.4	150.0	150.0	129.3	150.0	150.0
48"		113.2	150.0	150.0	96.8	145.2	150.0	138.8	150.0	119.2	150.0	102.4	150.0	150.0	85.6	128.4	150.0	68.8	103.2	137.6	138.8	150.0	99.6	149.4	150.0	118.8	150.0	150.0
54"		105.9	150.0	150.0	90.6	135.9	150.0	129.9	150.0	111.5	150.0	95.8	143.7	150.0	80.1	120.1	150.0	64.4	96.6	128.7	129.9	150.0	93.2	139.8	150.0	111.2	150.0	150.0
60"		100.6	150.0	150.0	86.0	129.1	150.0	123.4	150.0	106.0	150.0	91.0	136.5	150.0	76.1	114.1	150.0	61.2	91.7	122.3	123.4	150.0	88.5	132.8	150.0	105.6	150.0	150.0
66"		96.9	145.3	150.0	82.8	124.2	150.0	118.8	150.0	102.0	150.0	87.6	131.4	150.0	73.2	109.9	146.5	58.9	88.3	117.7	118.8	150.0	85.2	127.8	150.0	101.6	150.0	150.0
72"		94.3	141.5	150.0	80.7	121.0	150.0	115.7	150.0	99.3	149.0	85.3	128.0	150.0	71.3	107.0	142.7	57.3	86.0	114.7	115.7	150.0	83.0	124.5	150.0	99.0	148.5	150.0
36"	96"	116.1	150.0	150.0	99.3	148.9	150.0	142.4	150.0	122.3	150.0	105.0	150.0	150.0	87.8	131.7	150.0	70.6	105.8	141.1	142.4	150.0	102.2	150.0	150.0	121.8	150.0	150.0
42"		103.5	150.0	150.0	88.5	132.8	150.0	126.9	150.0	109.0	150.0	93.6	140.4	150.0	78.3	117.4	150.0	62.9	94.4	125.8	126.9	150.0	91.1	136.6	150.0	108.6	150.0	150.0
48"		94.3	141.5	150.0	80.7	121.0	150.0	115.7	150.0	99.3	149.0	85.3	128.0	150.0	71.3	107.0	142.7	57.3	86.0	114.7	115.7	150.0	83.0	124.5	150.0	99.0	148.5	150.0
54"		87.5	131.2	150.0	74.8	112.2	149.6	107.3	150.0	92.1	138.2	79.1	118.7	150.0	66.2	99.2	132.3	53.2	79.8	106.4	107.3	150.0	77.0	115.5	148.4	91.8	137.7	150.0
60"		82.3	123.5	150.0	70.4	105.6	140.8	100.9	150.0	86.7	130.0	74.5	111.7	148.9	62.3	93.4	124.5	50.0	75.1	100.1	100.9	150.0	72.4	108.7	139.6	86.4	129.6	150.0
66"		78.4	117.6	150.0	67.0	100.6	134.1	96.1	144.2	82.6	123.8	70.9	106.4	141.9	59.3	88.9	118.6	47.7	71.5	95.3	96.1	144.2	69.0	103.5	133.0	82.3	123.4	150.0
72"		75.5	113.2	150.0	64.5	96.8	129.1	92.5	138.8	79.5	119.2	68.3	102.4	136.5	57.1	85.6	114.1	45.9	68.8	91.7	92.5	138.8	66.4	99.6	128.0	79.2	118.8	150.0
36"	102"	107.8	150.0	150.0	92.2	138.3	150.0	132.2	150.0	113.5	150.0	97.5	146.3	150.0	81.5	122.3	150.0	65.5	98.3	131.0	132.2	150.0	94.9	142.3	150.0	113.1	150.0	150.0
42"		95.8	143.7	150.0	81.9	122.9	150.0	117.5	150.0	100.9	150.0	86.7	130.0	150.0	72.5	108.7	144.9	58.2	87.4	116.5	117.5	150.0	84.3	126.5	150.0	100.6	150.0	150.0
48"		87.1	130.6	150.0	74.5	111.7	148.9	106.8	150.0	91.7	137.5	78.8	118.2	150.0	65.8	98.8	131.7	52.9	79.4	105.8	106.8	150.0	76.6	114.9	147.7	91.4	137.1	150.0
54"		80.5	120.7	150.0	68.8	103.3	137.7	98.7	148.1	84.8	127.1	72.8	109.2	145.6	60.9	91.3	121.7	48.9	73.4	97.8	98.7	148.1	70.8	106.2	136.5	84.5	126.7	150.0
60"		75.5	113.2	150.0	64.5	96.8	129.1	92.5	138.8	79.5	119.2	68.3	102.4	136.5	57.1	85.6	114.1	45.9	68.8	91.7	92.5	138.8	66.4	99.6	128.0	79.2	118.8	150.0
66"		71.6	107.4	143.2	61.2	91.8	122.4	87.8	131.7	75.4	113.1	64.8	97.1	129.5	54.1	81.2	108.3	43.5	65.3	87.0	87.8	131.7	63.0	94.5	121.4	75.1	112.7	150.0
72"		68.6	102.9	137.2	58.7	88.0	117.3	84.1	126.2	72.2	108.4	62.1	93.1	124.1	51.9	77.8	103.8	41.7	62.5	83.4	84.1	126.2	60.4	90.5	116.4	72.0	108.0	144.0
36"	108"	100.6	150.0	150.0	86.0	129.1	150.0	123.4	150.0	106.0	150.0	91.0	136.5	150.0	76.1	114.1	150.0	61.2	91.7	122.3	123.4	150.0	88.5	132.8	150.0	105.6	150.0	150.0
42"		89.2	133.8	150.0	76.3	114.4	150.0	109.4	150.0	94.0	140.9	80.7	121.1	150.0	67.5	101.2	134.9	54.2	81.3	108.5	109.4	150.0	78.5	117.8	150.0	93.6	140.5	150.0
48"		80.9	121.3	150.0	69.1	103.7	138.3	99.1	148.7	85.1	127.7	73.1	109.7	146.3	61.1	91.7	122.3	49.1	73.7	98.3	99.1	148.7	71.1	106.7	137.1	84.9	127.3	150.0
54"		74.5	111.8	149.1	63.7	95.6	127.5	91.4	137.1	78.5	117.7	67.4	101.1	134.8	56.4	84.5	112.7	45.3	68.0	90.6	91.4	137.1	65.6	98.4	126.4	78.2	117.3	150.0
60"		69.7	104.5	139.3	59.6	89.4	119.1	85.4	128.1	73.4	110.0	63.0	94.5	126.0	52.7	79.0	105.4	42.3	63.5	84.7	85.4	128.1	61.3	91.9	118.2	73.1	109.7	146.2
66"		65.9	98.8	131.7	56.3	84.5	112.6	80.8	121.1	69.4	104.0	59.6	89.4	119.2	49.8	74.7	99.6	40.0	60.0	80.1	80.8	121.1	57.9	86.9	111.7	69.1	103.7	138.2
72"		62.9	94.3	125.8	53.8	80.7	107.6	77.1	115.7	66.2	99.3	56.9	85.3	113.8	47.6	71.3	95.1	38.2	57.3	76.4	77.1	115.7	55.3	83.0	106.7	66.0	99.0	132.0
36"	114"	94.3	141.5	150.0	80.7	121.0	150.0	115.7	150.0	99.3	149.0	85.3	128.0	150.0	71.3	107.0	142.7	57.3	86.0	114.7	115.7	150.0	83.0	124.5	150.0	99.0	148.5	150.0
42"		83.5	125.2	150.0	71.4	107.1	142.7	102.3	150.0	87.9	131.8	75.5	113.3	150.0	63.1	94.7	126.2	50.7	76.1	101.5	102.3	150.0	73.4	110.2	141.6	87.6	131.4	150.0
48"		75.5	113.2	150.0	64.5	96.8	129.1	92.5	138.8	79.5	119.2	68.3	102.4	136.5	57.1	85.6	114.1	45.9	68.8	91.7	92.5	138.8	66.4	99.6	128.0	79.2	118.8	150.0
54"		69.4	104.1	138.8	59.3	89.0	118.7	85.1	127.6	73.1	109.6	62.8	94.2	125.5	52.5	78.7	105.0	42.2	63.3	84.4	85.1	127.6	61.1	91.6	117.7	72.8	109.2	145.7
60"		64.7	97.0	129.4	55.3	83.0	110.6	79.3	119.0	68.1	102.2	58.5	87.8	117.0	48.9	73.4	97.8	39.3	59.0	78.6	79.3	119.0	56.9	85.4	109.7	67.9	101.8	135.8
66"		61.0	91.5	122.0	52.1	78.2	104.3	74.8	112.2	64.2	96.3	55.2	82.7	110.3	46.1	69.2	92.2	37.1	55.6	74.1	74.8	112.2	53.7	80.5	103.4	64.0	96.0	128.0
72"		58.1	87.1	116.1	49.6	74.5	99.3	71.2	106.8	61.1	91.7	52.5	78.8	105.0	43.9	65.8	87.8	35.3	52.9	70.6	71.2	106.8	51.1	76.6	98.5	60.9	91.4	121.8
36"	120"	88.8	133.2	150.0	75.9	113.9	150.0	108.9	150.0	93.5	140.2	80.3	120.5	150.0	67.1	100.7	134.3	54.0	80.9	107.9	108.9	150.0	78.1	117.2	150.0	93.2	139.8	150.0
42"		78.4	117.6	150.0	67.0	100.6	134.1	96.1	144.2	82.6	123.8	70.9	106.4	141.9	59.3	88.9	118.6	47.7	71.5	95.3	96.1	144.2	69.0	103.5	133.0	82.3	123.4	150.0
48"		70.8	106.1	141.5	60.5	90.8	121.0	86.8	130.1	74.5	111.8	64.0	96.0	128.0	53.5	80.3	107.0	43.0	64.5	86.0	86.8	130.1	62.3	93.4	120.0	74.3	111.4	148.5
54"		64.9	97.4	129.8	55.5	83.3	111.0	79.6	119.4	68.4	102.5	58.7	88.1	117.4	49.1	73.6	98.2	39.5	59.2	78.9	79.6	119.4	57.1	85.7	110.1	68.1	102.2	136.3
60"		60.4	90.6	120.7	51.6	77.4	103.3	74.0	111.0	63.6	95.4	54.6	81.9	109.2	45.7	68.5	91.3	36.7	55.0	73.4	74.0	111.0	53.1	79.7	102.4	63.4	95.0	126.7
66"		56.8	85.2	113.6	48.6	72.8	97.1	69.6	104.4	59.8	89.7	51.4	77.0	102.7	42.9	64.4	85.9	34.5	51.8	69.0	69.6	104.4	50.0	74.9	96.3	59.6	89.4	119.2
72"		53.9	80.9	107.8	46.1	69.1	92.2	66.1	99.1	56.8	85.1	48.8	73.1	97.5	40.8	61.1	81.5	32.8	49.1	65.5	66.1	99.1	47.4	71.1	91.4	56.6	84.9	113.1

INTERPOLATION FROM THESE CHARTS IS ALLOWED.

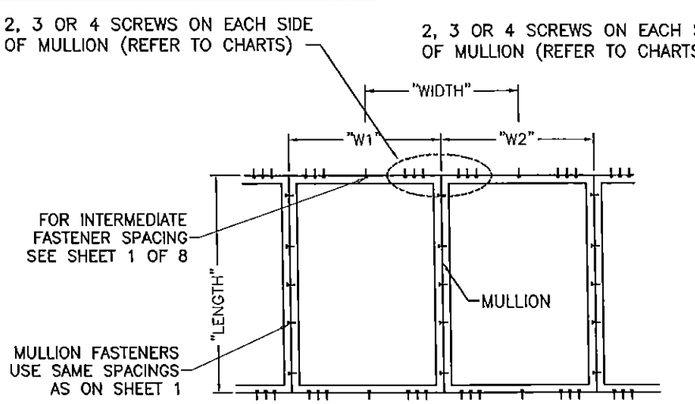

TYPICAL ELEVATION

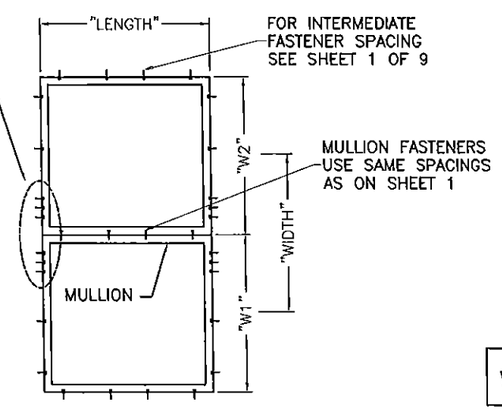

TYPICAL ELEVATION

$$\text{Width} = \frac{W1 + W2}{2}$$

Engr: JAVAD AHMAD
CIVIL
FLA. PE # 70592
C.A.N. 3538

MAY 2015

PRODUCT REVISED
as complying with the Florida Building Code
Acceptance No 15-0512.12
Expiration Date June 3, 2019
By Manuel Perez
Miami Dade Product Control

AL-FAROOQ CORPORATION
ENGINEERS & PRODUCT DEVELOPMENT
1235 S.W. 87 AVE
MIAMI, FLORIDA 33174
TEL. (305) 264-8100 FAX. (305) 262-6978
COMP-ANL\W08-95CGI

SERIES 410 FIXED WINDOW (L.M.I.)

CGI WINDOWS & DOORS
10100 N.W. 25TH STREET
MIAMI, FL. 33172
TEL. (305) 593-6590 FAX. (305) 593-6592

revisions:

no	date	by	description
A	04.06.09		REV. PER BCCO COMMENTS
B	12.29.11		CHART REV.
C	02.10.14		NO CHANGE THIS SHEET
D	06.03.14		REV. PER RER COMMENTS
E	05.01.15		NO CHANGE THIS SHEET

date: 12-04-08
scale: -
dr. by: -
chk. by:

drawing no.
W08-95

sheet 6 of 9

DESIGN LOAD CAPACITY – PSF (MULLION) 1" X 4" X 1/8" ALUM TUBE			
WINDOW DIMS.		LAMINATED GLASS	INSUL. LAM. GLASS
WIDTH	LENGTH	EXT.(+) & INT.(–)	EXT.(+) & INT.(–)
72"	72"	100.0	80.0
36"	84"	100.0	100.0
48"		90.0	57.0
68"		59.0	37.0

ANY SIZE OR DESIGN LOAD LESS THAN CHART IS ALLOWED.

DESIGN LOAD CAPACITY – PSF (MULLION) 2" X 6" X 1/8" ALUM TUBE			
WINDOW DIMS.		LAMINATED GLASS	INSUL. LAM. GLASS
WIDTH	LENGTH	EXT.(+) & INT.(–)	EXT.(+) & INT.(–)
84"	72"	100.0	100.0
60"	96"	100.0	100.0
84"		75.0	75.0
60"	108"	75.0	72.0
72"		68.0	58.0
48"	120"	75.0	68.0
60"		60.0	51.0
72"		49.0	36.0

ANY SIZE OR DESIGN LOAD LESS THAN CHART IS ALLOWED.

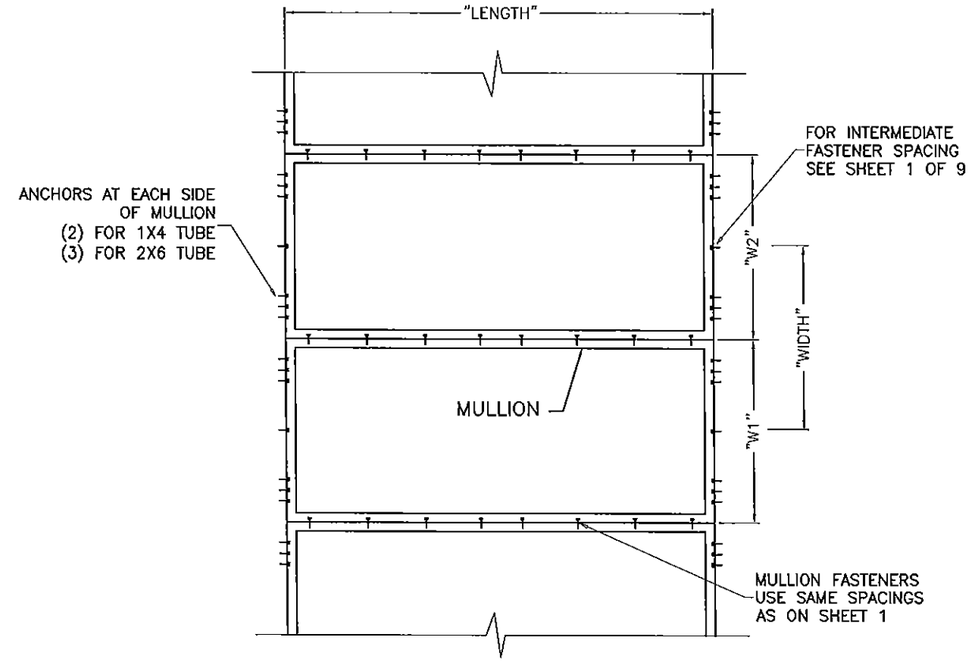

TYPICAL ELEVATION

$$\text{Width} = \frac{W1 + W2}{2}$$

$$W2 \leq W1$$

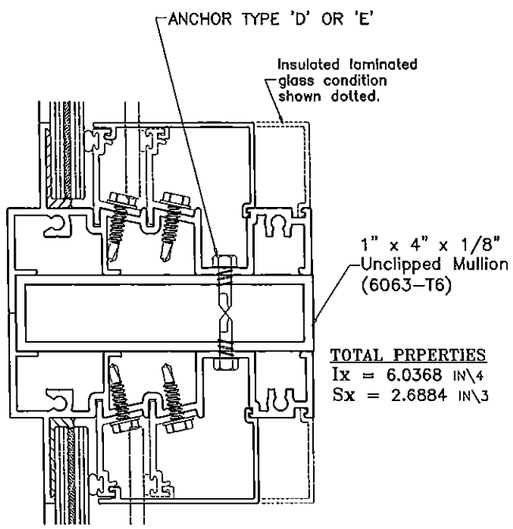

TOTAL PRPERTIES
Ix = 6.0368 IN\4
Sx = 2.6884 IN\3

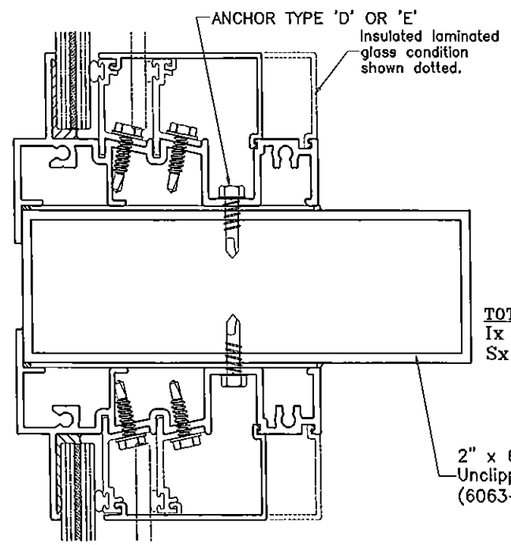

TOTAL PRPERTIES
Ix = 12.2758 IN\4
Sx = 4.0919 IN\3

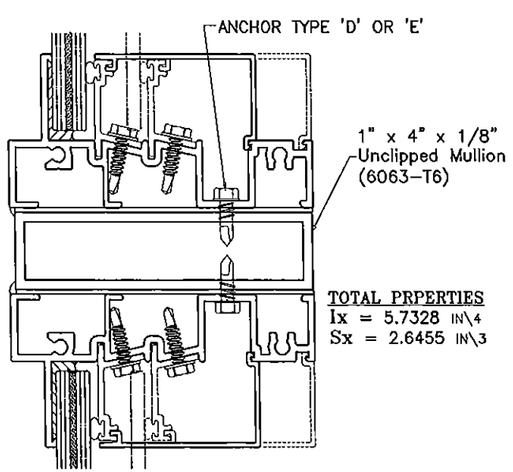

TOTAL PRPERTIES
Ix = 5.7328 IN\4
Sx = 2.6455 IN\3

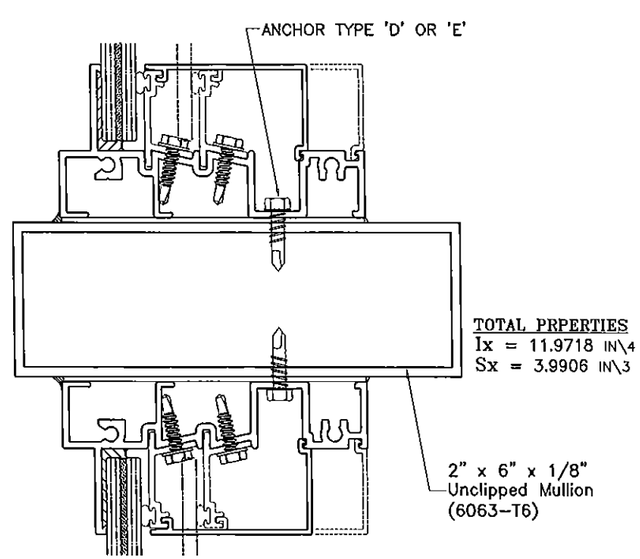

TOTAL PRPERTIES
Ix = 11.9718 IN\4
Sx = 3.9906 IN\3

Engr: JAVAD AHMAD
CIVIL
FLA. PE # 70592
C.A.N. 3538

MAY 27 2015

PRODUCT REVISED
as complying with the Florida Building Code
Acceptance No 15-0512.12
Expiration Date June 3, 2019
By Maurel Fox
Miami Dade Product Control

AL-FAROOQ CORPORATION
ENGINEERS & PRODUCT DEVELOPMENT
1235 S.W. 87 AVE
MIAMI, FLORIDA 33174
TEL. (305) 264-8100 FAX. (305) 262-6978

COMP–ANL\W08–95CGI

SERIES 410 FIXED WINDOW (L.M.I.)

CGI WINDOWS & DOORS
10100 N.W. 25TH STREET
MIAMI, FL. 33172
TEL. (305) 593–6590 FAX. (305) 593–6592

revisions:

no	date	by	description
A	04.06.09		REV. PER BCCO COMMENTS
B	12.29.11		UPDATED TO 2010 FBC
C	02.10.14		PROPERTIES ADDED
D	06.03.14		NO CHANGE THIS SHEET
E	05.01.15		NO CHANGE THIS SHEET

date: 12–04–08
scale: –
dr. by: –
chk. by:

drawing no.
W08–95

DESIGN LOAD CAPACITY – PSF				
WINDOW DIMS.		ANCHOR TYPES 'A', 'B', 'AA', 'BB'		ANCHOR TYPE 'BBB'
DIM. 1	DIM. 2	AT 16" O.C.	AT 8" O.C.	AT 16" O.C.
30"	48"	150.0	150.0	150.0
36"		150.0	150.0	139.7
42"		150.0	150.0	133.1
48"		150.0	150.0	131.0
51"		150.0	150.0	116.4
57"		150.0	150.0	95.3
60"		150.0	150.0	87.3
63"		150.0	150.0	100.8
66"		150.0	150.0	93.6
69"		150.0	150.0	87.3
72"		150.0	150.0	81.9
30"	54"	150.0	150.0	129.0
36"		150.0	150.0	116.4
42"		150.0	150.0	108.9
48"		150.0	150.0	104.8
51"		150.0	150.0	103.8
57"		150.0	150.0	93.2
60"		150.0	150.0	84.7
63"		150.0	150.0	97.0
66"		150.0	150.0	89.6
69"		150.0	150.0	83.2
72"		150.0	150.0	77.6
30"	60"	150.0	150.0	111.8
36"		150.0	150.0	99.8
42"		142.8	150.0	92.1
48"		135.3	150.0	87.3
51"		132.9	150.0	85.8
57"		130.2	150.0	84.1
60"		129.9	150.0	83.8
63"		129.9	150.0	95.3
66"		129.9	150.0	87.3
69"		129.9	150.0	80.6
72"		129.9	150.0	74.9
30"	66"	150.0	150.0	123.3
36"		150.0	150.0	109.2
42"		150.0	150.0	99.8
48"		145.0	150.0	93.6
51"		141.5	150.0	91.3
57"		136.8	150.0	88.3
60"		135.3	150.0	87.3
63"		134.5	150.0	86.8
66"		134.2	150.0	86.6
69"		134.2	150.0	79.4
72"		134.2	150.0	73.3
30"	72"	150.0	150.0	110.3
36"		150.0	150.0	97.0
42"		136.5	150.0	88.1
48"		126.9	150.0	81.9
51"		123.3	150.0	79.5
57"		117.9	150.0	76.1
60"		116.0	150.0	74.9
63"		114.6	150.0	73.9
66"		113.6	150.0	73.3
69"		113.0	150.0	72.9
72"		112.8	150.0	72.8

DESIGN LOAD CAPACITY – PSF				
WINDOW DIMS.		ANCHOR TYPES 'A', 'B', 'AA', 'BB'		ANCHOR TYPE 'BBB'
DIM. 1	DIM. 2	AT 16" O.C.	AT 8" O.C.	AT 16" O.C.
30"	78"	150.0	150.0	119.8
36"		150.0	150.0	104.8
42"		146.5	150.0	94.6
48"		135.3	150.0	87.3
51"		131.0	150.0	84.5
57"		124.3	150.0	80.2
60"		121.8	150.0	78.6
63"		119.7	150.0	77.3
66"		118.1	150.0	76.2
69"		116.0	150.0	75.4
72"		116.0	150.0	74.9
30"	84"	150.0	150.0	109.4
36"		147.6	150.0	95.3
42"		132.6	150.0	85.6
48"		121.8	150.0	78.6
51"		117.6	150.0	75.9
57"		110.9	150.0	71.6
60"		108.3	150.0	69.9
63"		106.1	150.0	68.4
66"		104.2	150.0	67.3
69"		102.7	150.0	66.3
72"		101.5	150.0	65.5
30"	90"	150.0	150.0	100.6
36"		135.3	150.0	87.3
42"		121.0	150.0	78.1
48"		110.7	150.0	71.5
51"		106.6	150.0	68.8
57"		100.1	150.0	64.6
60"		97.4	150.0	62.9
63"		95.2	150.0	61.4
66"		93.2	150.0	60.2
69"		91.6	150.0	59.1
72"		90.2	150.0	58.2
30"	96"	150.0	150.0	108.7
36"		145.7	150.0	94.1
42"		129.9	150.0	83.8
48"		118.4	150.0	76.4
51"		113.8	150.0	73.5
57"		106.4	150.0	68.6
60"		103.3	150.0	66.7
63"		100.7	150.0	65.0
66"		98.4	150.0	63.5
69"		96.4	150.0	62.2
72"		94.7	150.0	61.1
30"	102"	150.0	150.0	101.2
36"		135.3	150.0	87.3
42"		120.3	150.0	77.6
48"		109.3	150.0	70.5
51"		104.9	150.0	67.7
57"		97.7	150.0	63.0
60"		94.7	150.0	61.1
63"		92.1	150.0	59.5
66"		89.9	150.0	58.0
69"		87.9	150.0	56.7
72"		86.1	150.0	55.6

DESIGN LOAD CAPACITY – PSF				
WINDOW DIMS.		ANCHOR TYPES 'A', 'B', 'AA', 'BB'		ANCHOR TYPE 'BBB'
DIM. 1	DIM. 2	AT 16" O.C.	AT 8" O.C.	AT 16" O.C.
30"	108"	146.7	150.0	94.7
36"		126.3	150.0	81.5
42"		112.0	150.0	72.3
48"		101.5	150.0	65.5
51"		97.3	150.0	62.8
57"		90.3	150.0	58.3
60"		87.4	150.0	56.4
63"		84.9	150.0	54.8
66"		82.7	150.0	53.4
69"		80.7	149.9	52.1
72"		78.9	146.6	50.9
30"	114"	150.0	150.0	101.6
36"		135.3	150.0	87.3
42"		119.7	150.0	77.3
48"		108.3	150.0	69.9
51"		103.6	150.0	66.9
57"		96.0	150.0	61.9
60"		92.8	150.0	59.9
63"		90.0	150.0	58.1
66"		87.5	150.0	56.5
69"		85.3	149.2	55.0
72"		83.3	145.7	53.7
30"	120"	148.5	150.0	95.8
36"		127.4	150.0	82.2
42"		112.5	150.0	72.6
48"		101.5	150.0	65.5
51"		97.0	150.0	62.6
57"		89.7	150.0	57.9
60"		86.6	150.0	55.9
63"		83.9	150.0	54.1
66"		81.5	150.0	52.6
69"		79.3	148.6	51.2
72"		77.3	145.0	49.9

INTERPOLATION FROM THESE CHARTS IS ALLOWED

ALUMINUM BUCK FRAMING DETAILS

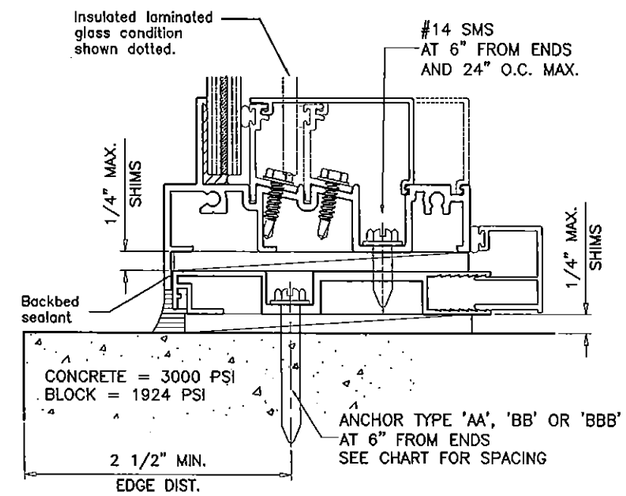

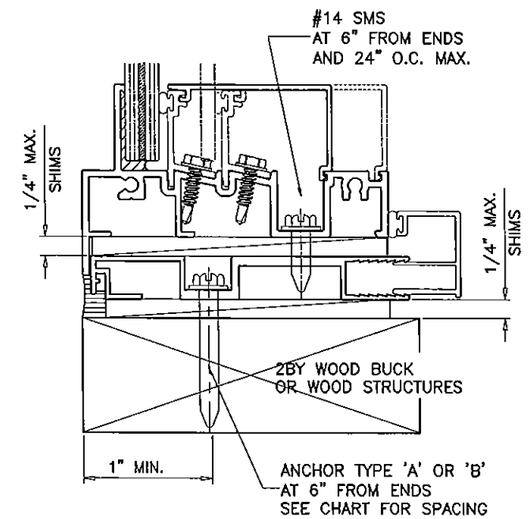

TYPICAL INSTALLATION DETAIL
ON ALL FOUR SIDES

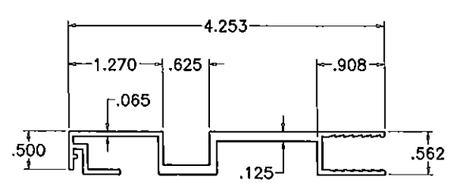

ALUMINUM BUCK
6063–T6

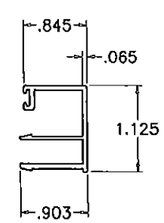

OPTIONAL COVER
6063–T6

Engr: JAVAD AHMAD
CIVIL
FLA. PE # 70592
C.A.N. 3538

MAY 27 2015

PRODUCT REVISED
as complying with the Florida Building Code
Acceptance No 15-0512.12
Expiration Date June 3, 2019
By Manuel Perez
Miami Dade Product Control

AL-FAROOQ CORPORATION
ENGINEERS & PRODUCT DEVELOPMENT
1235 S.W. 87 AVE
MIAMI, FLORIDA 33174
TEL. (305) 264-8100 FAX. (305) 262-6978

COMP–ANL\W08–95CGI

SERIES 410 FIXED WINDOW (L.M.I.)

CGI WINDOWS & DOORS
10100 N.W. 25TH STREET
MIAMI, FL. 33172
TEL. (305) 593–6590 FAX. (305) 593–6592

revisions:

no	date	by	description
A	04.06.09		NO CHANGE THIS SHEET
B	12.29.11		CHART REV.
C	02.10.14		NO CHANGE THIS SHEET
D	06.03.14		REV. PER RER COMMENTS
E	05.01.15		NO CHANGE THIS SHEET

date: 12–04–08
scale: –
dr. by: –
chk. by:

drawing no.
W08–95

sheet 8 of 9

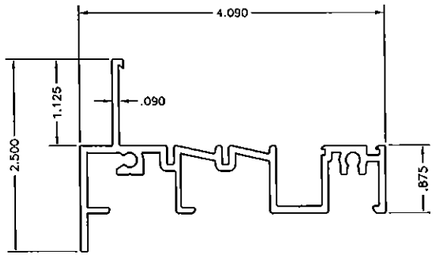

① Flange Frame

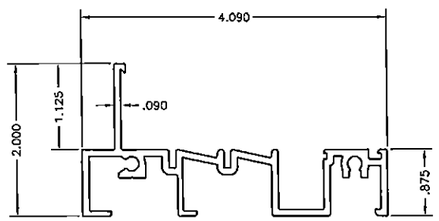

② Equal Leg Frame

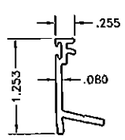

③ Glass Stop

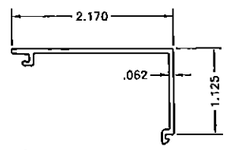

④ Standard Cover

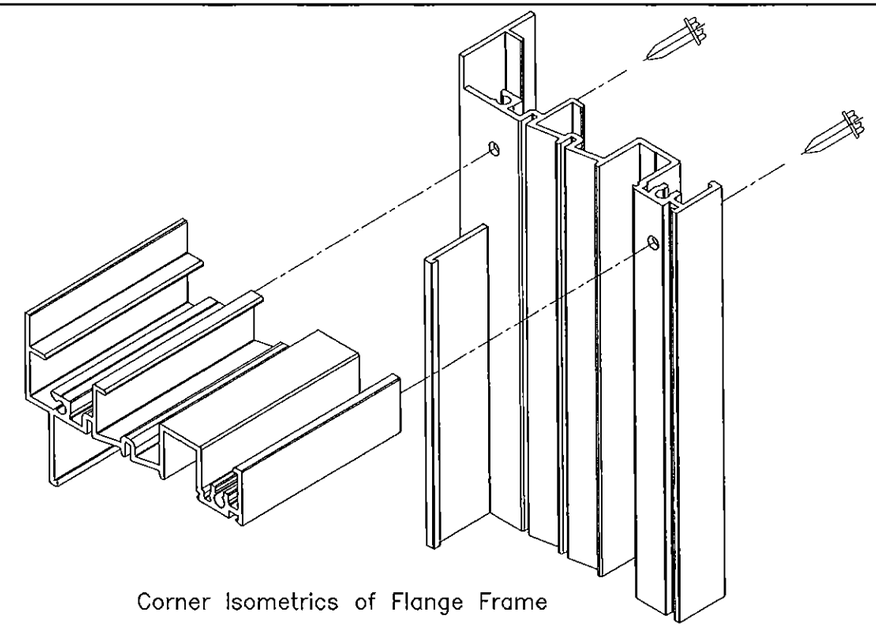

Corner Isometrics of Flange Frame

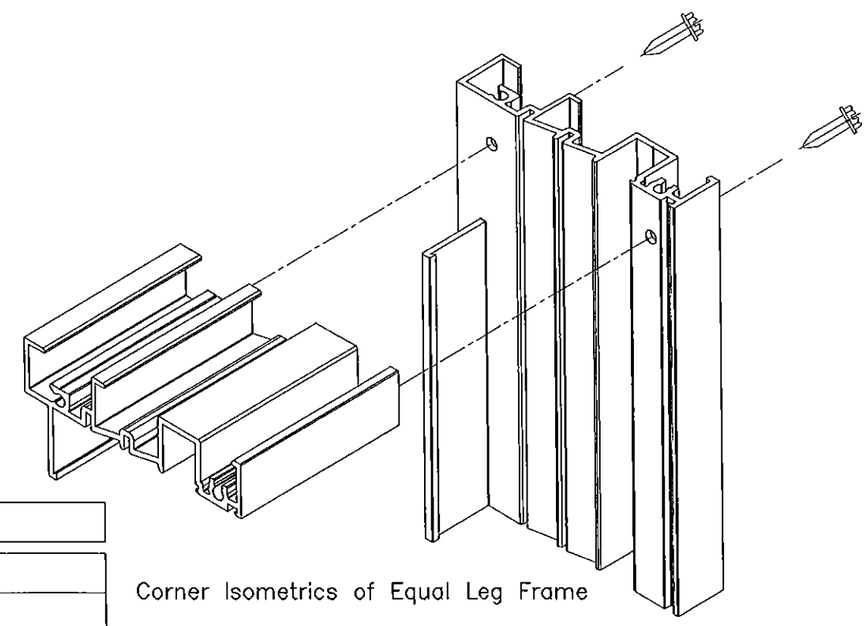

Corner Isometrics of Equal Leg Frame

Bill of Materials

Item	Part No. or Name	Qty.	Description	Material	Manufacturer / Supplier	Remarks
①	CGI–700	Varies	Main Frame (Flange)	Aluminum 6063–T6	Custom Extruded for CGI	Continuous on 4 sides
②	CGI–703	Varies	Main Frame (Equal Leg)	Aluminum 6063–T6	Custom Extruded for CGI	Continuous on 4 sides
③	CGI–701	Varies	Glass Stop	Aluminum 6063–T6	Custom Extruded for CGI	Continuous on 4 sides
④	CGI–702	Varies	Standard Cover	Aluminum 6063–T5	Custom Extruded for CGI	Continuous on 4 sides
⑤	Glass Stop Screw	Varies	#10 x 3/4" Hex Hd Self Drilling	Steel	Varies	at 6" from ends and 12" on center
⑥	Varies	Varies	GE–1200 or GE–2000 or DOW–995	Silicone	General Electric or Dow Corning	Structural Silicone
⑦	CGI–382V	Varies	Glass Stop Bulb	Vinyl	Custom Extruded	
⑧	Frame Screw	8	#12 x 1 1/4" Hex Hd SMS	S/S	Varies	2 per corner
⑨	–	2	Setting Block	Epdm	Varies	Durometer 85±5 Shore A

Engr: JAVAD AHMAD
CIVIL
FLA. PE # 70592
C.A.N. 3538

MAY 27 2015

PRODUCT REVISED
as complying with the Florida
Building Code
Acceptance No 15-0512.12
Expiration Date June 3, 2019
By
Miami-Dade Product Control

AL-FAROOQ CORPORATION
ENGINEERS & PRODUCT DEVELOPMENT
1235 S.W. 87 AVE
MIAMI, FLORIDA 33174
TEL. (305) 264-8100 FAX. (305) 262-6978

COMP–ANL\W08–95CGI

SERIES 410 FIXED WINDOW (L.M.I.)

CGI WINDOWS & DOORS
10100 N.W. 25TH STREET
MIAMI, FL. 33172
TEL. (305) 593–6590 FAX. (305) 593–6592

revisions:

no	date	by	description
A	04.06.09		NO CHANGE THIS SHEET
B	12.29.11		NO CHANGE THIS SHEET
C	02.10.14		NO CHANGE THIS SHEET
D	06.03.14		REV. PER RER COMMENTS
E	05.01.15		NO CHANGE THIS SHEET

date: 12–04–08
scale: –
dr. by: –
chk. by:

drawing no.
W08–95

sheet 9 of 9