MIAMI-DADE COUNTY
PRODUCT CONTROL SECTION
11805 SW 26 Street, Room 208
Miami, Florida 33175-2474
T (786) 315-2590 F (786) 315-2599
www.miamidade.gov/economy

DEPARTMENT OF REGULATORY AND ECONOMIC RESOURCES (RER)
BOARD AND CODE ADMINISTRATION DIVISION

NOTICE OF ACCEPTANCE (NOA)

Universal Impact Windows & Doors, Inc.
1675 W. 31ST Place
Hialeah, FL 33012

SCOPE:

This NOA is being issued under the applicable rules and regulations governing the use of construction materials. The documentation submitted has been reviewed and accepted by Miami-Dade County RER - Product Control Section to be used in Miami Dade County and other areas where allowed by the Authority Having Jurisdiction (AHJ).

This NOA shall not be valid after the expiration date stated below. The Miami-Dade County Product Control Section (In Miami Dade County) and/or the AHJ (in areas other than Miami Dade County) reserve the right to have this product or material tested for quality assurance purposes. If this product or material fails to perform in the accepted manner, the manufacturer will incur the expense of such testing and the AHJ may immediately revoke, modify, or suspend the use of such product or material within their jurisdiction. RER reserves the right to revoke this acceptance, if it is determined by Miami-Dade County Product Control Section that this product or material fails to meet the requirements of the applicable building code.

This product is approved as described herein, and has been designed to comply with the Florida Building Code, including the High Velocity Hurricane Zone.

DESCRIPTION: Series "Rebecca" Aluminum Outswing French Door w/wo Sidelites – L.M.I.

APPROVAL DOCUMENT: Drawing No. **W04-81, Rev G** titled "Series Rebecca Alum. Outswing French Door (L.M.I.)", sheets 1, 2, 3, 4, 4.1 & 4.2 through 11 of 11, dated 09/13/04 and last revised on OCT 14, 2015, prepared by Al-Farooq Corporation, signed and sealed by Javad Ahmad, P. E., bearing the Miami-Dade County Product Control Revision stamp with the Notice of Acceptance number and Expiration date by the Miami-Dade County Product Control Section.

MISSILE IMPACT RATING: Large and Small Missile Impact Resistant

Limitations:

1. See sheets **2**, **3** & **4** for applicable Design Pressure (DP) ratings. Lower DP ratings shall apply for entire assembly, when doors are mulled w/ Sidelites. See sheet **4.2** for approved configurations w/ Sidelites.
2. Two (2) manually operated Flush Bolts item #22 (top/bottom) are required at Single (active leaf) and Double doors (both active and in-active leaves). Steel substrate structural capacity to be reviewed by AHJ.

LABELING: Each unit shall bear a permanent label with the manufacturer's name or logo, city, state and series and following statement: "Miami-Dade County Product Control Approved", noted herein.

RENEWAL of this NOA shall be considered after a renewal application has been filed and there has been no change in the applicable building code negatively affecting the performance of this product.

TERMINATION of this NOA will occur after the expiration date or if there has been a revision or change in the materials, use, and/or manufacture of the product or process. Misuse of this NOA as an endorsement of any product, for sales, advertising or any other purposes shall automatically terminate this NOA. Failure to comply with any section of this NOA shall be cause for termination and removal of NOA.

ADVERTISEMENT: The NOA number preceded by the words Miami-Dade County, Florida, and followed by the expiration date may be displayed in advertising literature. If any portion of the NOA is displayed, then it shall be done in its entirety.

INSPECTION: A copy of this entire NOA shall be provided to the user by the manufacturer or its distributors and shall be available for inspection at the job site at the request of the Building Official.

This NOA **revises NOA # 12-0524.09** and consists of this page 1 and evidence pages E-1, as well as approval document mentioned above.

The submitted documentation was reviewed by **Ishaq I. Chanda, P.E.**

MIAMI-DADE COUNTY APPROVED

10/15/15

NOA No. 15-0512.22
Expiration Date: May 19, 2020
Approval Date: October 22, 2015

NOTICE OF ACCEPTANCE: EVIDENCE SUBMITTED

A. DRAWINGS

1. Manufacturer's die drawings and sections (Submitted under file # **see below**)
2. Drawing No. **W04–81, Rev G** titled "Series Rebecca Alum. Outswing French Door (L.M.I.)", sheets 1, 2, 3, 4, 4.1 & 4.2 through 11 of 11, dated 09/13/04 and last revised on OCT 14, 2015, prepared by Al–Farooq Corporation, signed and sealed by Javad Ahmad, P.E.

B. TESTS (Submitted under files **#12-0524.09/ #11-0308.01/ #10-0518.06/ #08-0418.02)**

1. Test reports on: 1) Air Infiltration Test, per FBC, TAS 202-94
   2) Uniform Static Air Pressure Test, Loading per FBC TAS 202-94
   3) Water Resistance Test, per FBC, TAS 202-94
   4) Large Missile Impact Test per FBC, TAS 201-94
   5) Cyclic Wind Pressure Loading per FBC, TAS 203-94
   6) Forced Entry Test, per FBC 2411 3.2.1, TAS 202-94

   along with marked–up drawings and installation diagram of an aluminum French door w/ sidelites, issued by Fenestration Testing Laboratory, Inc., Test Report No. **FTL–6240**, dated 10/13/10, signed and sealed by Jorge A. Causo, P. E.
2. Test reports on: 1) Air Infiltration Test, per FBC, TAS 202–94
   2) Uniform Static Air Pressure Test, Loading per FBC, TAS 202–94
   3) Water Resistance Test, per FBC, TAS 202–94
   4) Forced Entry Test, per FBC 2411 3.2.1, TAS 202–94
   5) Large Missile Impact Test per FBC, TAS 201–94
   6) Cyclic Wind Pressure Loading per FBC, TAS 203–94

   along with marked–up drawings and installation diagram of an outswing double French doors, prepared by Fenestration Testing Laboratory, Inc., Test Report No. **FTL–4145**, dated 09/14/04, signed and sealed by Edmundo Largaespada, P. E.

C. CALCULATIONS

1. Anchor verification calculations & structural analysis, complying with FBC-2014 (**5th Edition**), prepared by Al Farooq Corporation, dated 02/11/15, signed and sealed by Javad Ahmad, P.E.
2. Glazing complies w/ ASTME-1300-02, -04 & -09.

D. QUALITY ASSURANCE

1. Miami Dade Department of Regulatory and Economic Resources (RER).

E. MATERIAL CERTIFICATIONS

1. Notice of Acceptance No. **14-0916.11** issued to **Kuraray America, Inc.** (Former E.I. DuPont De Nemours & Co., Inc. for the "**Sentry Glass ® (Clear and White) Glass Interlayers**", expiring on 07/04/18.
2. Notice of Acceptance No. **12–1231.10** issued to **Eastman Chemical Company (MA)** (former Solutia, Inc.) for the "Saflex: Saflex Clear & Color glass interlayer", expiring on 05/21/16.

F. STATEMENTS

1. Statement letter of conformance to FBC 2014 and letter of no financial interest, prepared by Al Farooq Corporation, dated 01/13/15, signed and sealed by Javad Ahmad, P.E.
2. Lab compliance as part of the above referenced test report.

G. OTHER

1. This NOA **revises & renews** NOA # **12-0524.09**, expired on 05/19/15.

Ishaq I. Chanda

Ishaq I. Chanda, P.E.
Product Control Examiner
NOA No. 15-0512.22
Expiration Date: May 19, 2020
Approval Date: October 22, 2015

PRODUCT REVISED
as complying with the Florida
Building Code
Acceptance No. 15-05 12.22
Expiration Date MAY 19, 2020
By [signature]
Miami Dade Product Control

THESE DOORS ARE RATED FOR LARGE & SMALL MISSILE IMPACT.
SHUTTERS ARE NOT REQUIRED.

SERIES REBECCA
ALUMINUM OUTSWING FRENCH DOOR

SINGLE (X) AND DOUBLE (XX) LEAF DOORS WITH GLASS TYPES CAPACITIES SEE SHEET 2.
SINGLE AND DOUBLE LEAF DOORS WITH SIDELITES SEE SHEETS 3 & 4.
LOWER VALUES FROM SIDELITE (NARROW/WIDE STILE) CAPACITY CHART OR DOOR CAPACITY CHART WILL APPLY TO ENTIRE SYSTEM.

DOORS APPROVED FOR INSTALLATIONS WHERE WATER INFILTRATION RESISTANCE IS REQUIRED.

THIS PRODUCT HAS BEEN DESIGNED AND TESTED TO COMPLY WITH THE REQUIREMENTS OF THE FLORIDA BUILDING CODE INCLUDING HIGH VELOCITY HURRICANE ZONE (HVHZ).

1BY OR 2BY WOOD BUCKS BY OTHERS, MUST BE ANCHORED PROPERLY TO TRANSFER LOADS TO THE STRUCTURE.

ANCHORS SHALL BE AS LISTED, SPACED AS SHOWN ON DETAILS, ANCHORS EMBEDMENT TO BASE MATERIAL SHALL BE BEYOND WALL DRESSING OR STUCCO.

ANCHORING OR LOADING CONDITIONS NOT SHOWN IN THESE DETAILS ARE NOT PART OF THIS APPROVAL.

A LOAD DURATION INCREASE IS USED IN DESIGN OF ANCHORS INTO WOOD ONLY.

MATERIALS INCLUDING BUT NOT LIMITED TO STEEL/METAL SCREWS, THAT COME INTO CONTACT WITH OTHER DISSIMILAR MATERIALS SHALL MEET THE REQUIREMENTS OF THE FLORIDA BLDG. CODE.

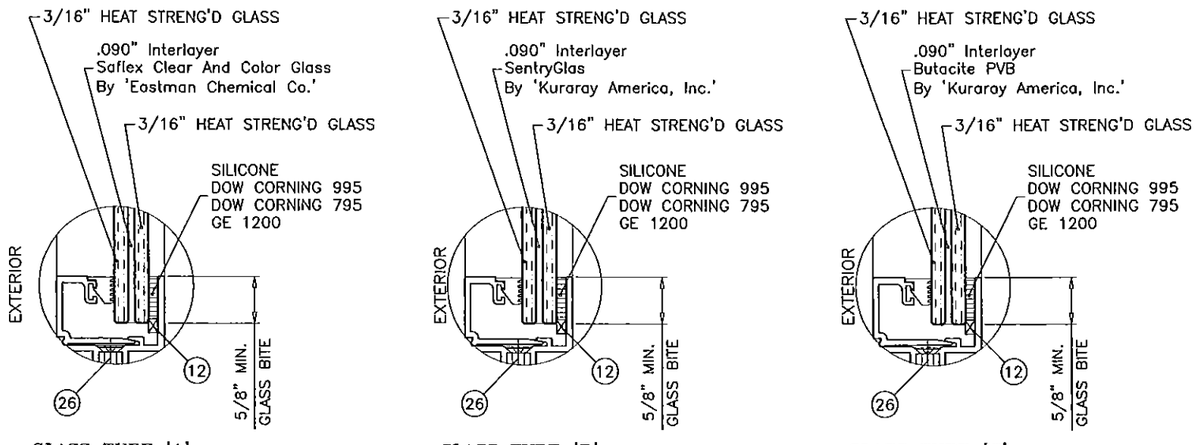

GLASS TYPE 'A'
7/16" OVERALL LAM. GLASS

GLASS TYPE 'B'
7/16" OVERALL LAM. GLASS

GLASS TYPE 'C'
7/16" OVERALL LAM. GLASS

GLAZING OPTIONS

Engr: JAVAD AHMAD
CIVIL
FLA. PE # 70592
C.A.N. 3538
OCT 14 2015

AL-FAROOQ CORPORATION
ENGINEERS & PRODUCT DEVELOPMENT
1235 S.W. 87 AVE
MIAMI, FLORIDA 33174
TEL (305) 264-8100 FAX. (305) 262-6978
COMP-ANL\W04-81UAW

SERIES REBECCA ALUM OUTSWING FRENCH DOOR (L.M.I.)

UNIVERSAL IMPACT WINDOWS & DOORS
1675 W. 31ST PLACE
HIALEAH, FL. 33012
TEL. (305) 825-7900 FAX (305) 825-5805

revisions:

no	date	by	description
C	10.21.10		GENERAL REVISION
D	05.18.11		REV. PER BNC COMMENTS
E	02.14.12		UPDATED TO 2010 FBC
F	01.09.15		UPDATED TO 2014 FBC
G	10.15.15		REV. PER RER COMMENTS

date: 09-13-04
scale: 3/8" = 1"
dr. by: HAMID
chk. by:

drawing no.
W04-81

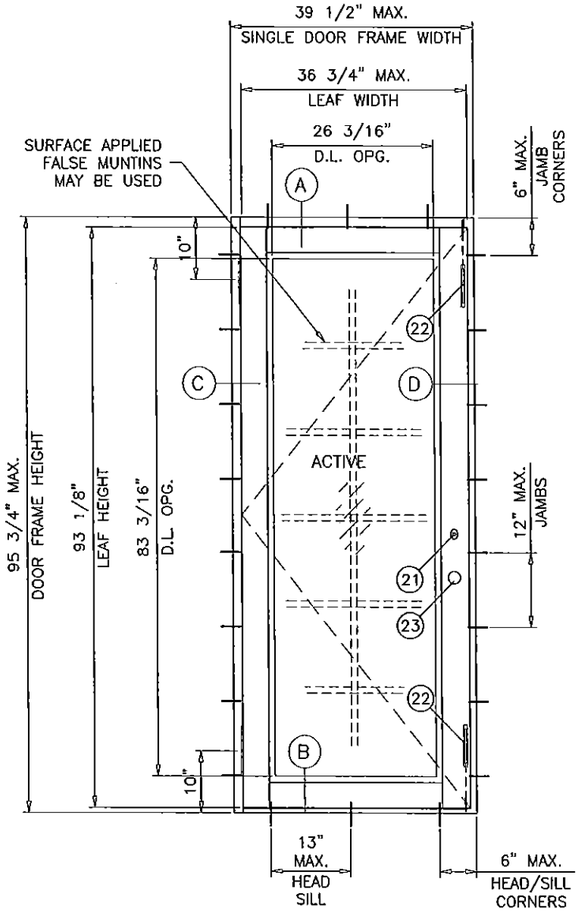

(X)

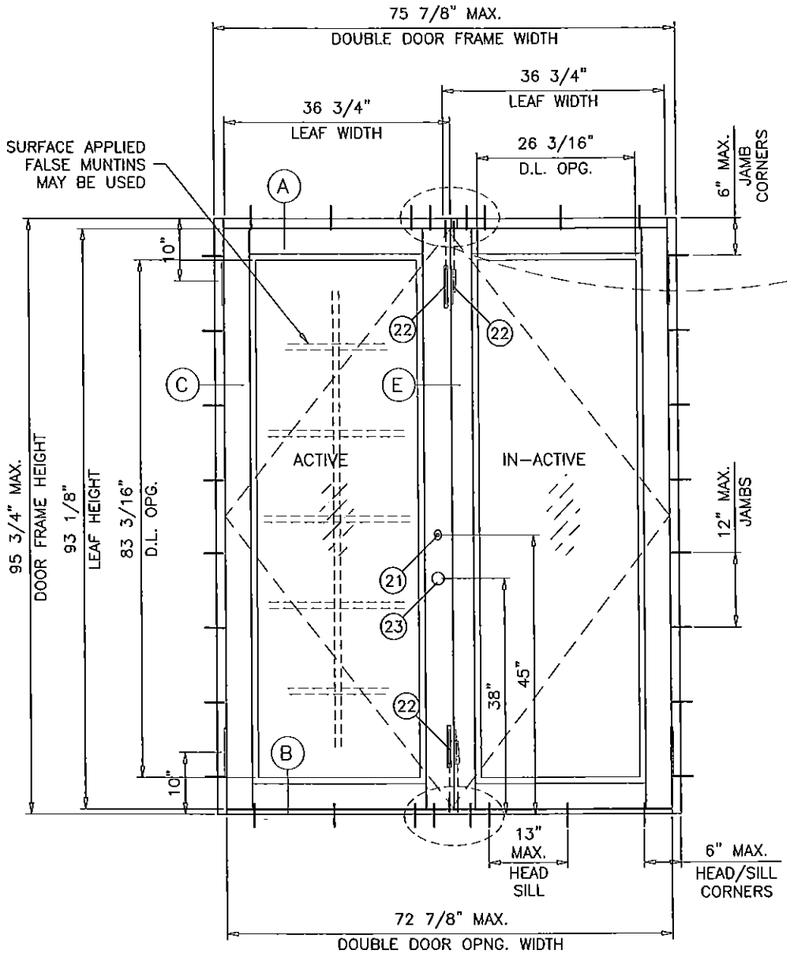

(XX)

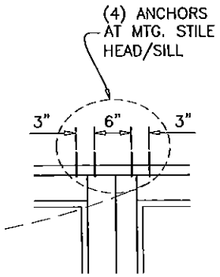

NOTE:
TOP & BOTTOM FLUSH BOLTS OF ACTIVE AND INACTIVE LEAF TO BE ENGAGED DURING PERIODS OF HURRICANE WARNING.

PRODUCT REVISED
as complying with the Florida Building Code
Acceptance No 15-0512.22
Expiration Date 5/19/20
By [signature]
Miami-Dade Product Control

DOORS LOAD CAPACITY – PSF SINGLE DOORS (X)							
DOOR DIMS.		GLASS TYPE 'A'		GLASS TYPE 'B'		GLASS TYPE 'C'	
FRAME WIDTH	FRAME HEIGHT	EXT.(+)	INT.(–)	EXT.(+)	INT.(–)	EXT.(+)	INT.(–)
37–1/2"	95–3/4"	85.0	85.0	85.0	85.0	65.0	75.0
39–1/2"	95–3/4"	65.0	75.0	65.0	75.0	65.0	75.0

DOORS LOAD CAPACITY – PSF DOUBLE DOORS (XX)							
DOOR DIMS.		GLASS TYPE 'A'		GLASS TYPE 'B'		GLASS TYPE 'C'	
FRAME WIDTH	FRAME HEIGHT	EXT.(+)	INT.(–)	EXT.(+)	INT.(–)	EXT.(+)	INT.(–)
71–7/8"	95–3/4"	85.0	85.0	85.0	85.0	65.0	75.0
75–7/8"	95–3/4"	65.0	75.0	65.0	75.0	65.0	75.0

GLASS D.L.O. DIMS.
D.L.O. HEIGHT = FRAME HEIGHT – 12.562"
D.L.O. WIDTH (X DOORS) = FRAME WIDTH – 13.312"
D.L.O. WIDTH (XX DOORS) = (FRAME WIDTH – 23.5")/2
LEAF HEIGHT = DOOR FRAME HEIGHT – 2.625"

NOTE:
GLASS CAPACITIES ON THIS SHEET ARE BASED ON ASTM E1300–09 (3 SEC. GUSTS) AND FLORIDA BUILDING COMMISSION DECLARATORY STATEMENT DCA05–DEC–219

Engr: JAVAD AHMAD
CIVIL
FLA. PE # 70592
C.A.N. 3538
OCT 14 2015

AL-FAROOQ CORPORATION
ENGINEERS & PRODUCT DEVELOPMENT
1235 S.W. 87 AVE
MIAMI, FLORIDA 33174
TEL. (305) 264-8100 FAX. (305) 262-6978
COMP-ANL\W04-81UAW

SERIES REBECCA ALUM OUTSWING FRENCH DOOR (L.M.I.)

UNIVERSAL IMPACT WINDOWS & DOORS
1675 W. 31ST PLACE
HIALEAH, FL. 33012
TEL (305) 825-5805 FAX (305) 825-7900

revisions:

no	date	by	description
C	10.21.10		GENERAL REVISION
D	05.18.11		REV. PER BNC COMMENTS
E	02.14.12		NO CHANGE THIS SHEET
F	01.09.15		UPDATED TO 2014 FBC
G	10.15.15		REV. PER RER COMMENTS

date: 09-13-04
scale: 3/8" = 1"
dr. by: HAMID
chk. by:

drawing no.
W04-81

sheet 2 of 11

DESIGN LOAD CAPACITY – PSF SIDELITES WITH SINGLE OR DOUBLE LEAF DOORS			
NOM. SIDELITE WIDTH INCHES	FRAME HEIGHT INCHES	NARROW/WIDE STILE SIDELITE WITH DOOR	
		EXT.(+)	INT.(–)
32	82–1/4	65.0	75.0
34		65.0	75.0
36		65.0	75.0
37		65.0	75.0
39		61.8	71.3
42		57.4	66.2
44		54.8	63.2
32	84	65.0	75.0
34		65.0	75.0
36		65.0	75.0
37		65.0	75.0
39		61.8	71.3
42		57.4	66.2
32	90	65.0	75.0
34		65.0	75.0
36		65.0	75.0
37		65.0	75.0
39		61.8	71.3
32	95–3/4	65.0	75.0
34		65.0	75.0
36		65.0	75.0
37		65.0	75.0

NOTE:
FOR DOOR CAPACITIES SEE SHEET 2.
FOR SIDELITE WITH DOOR CAPACITIES SEE CHART ABOVE.
LOWER VALUES FROM DOOR OR SIDELITE CHART
WILL APPLY TO ENTIRE SYSTEM.
SEE SHEET 4.1 FOR SIDELITE WIDTHS.

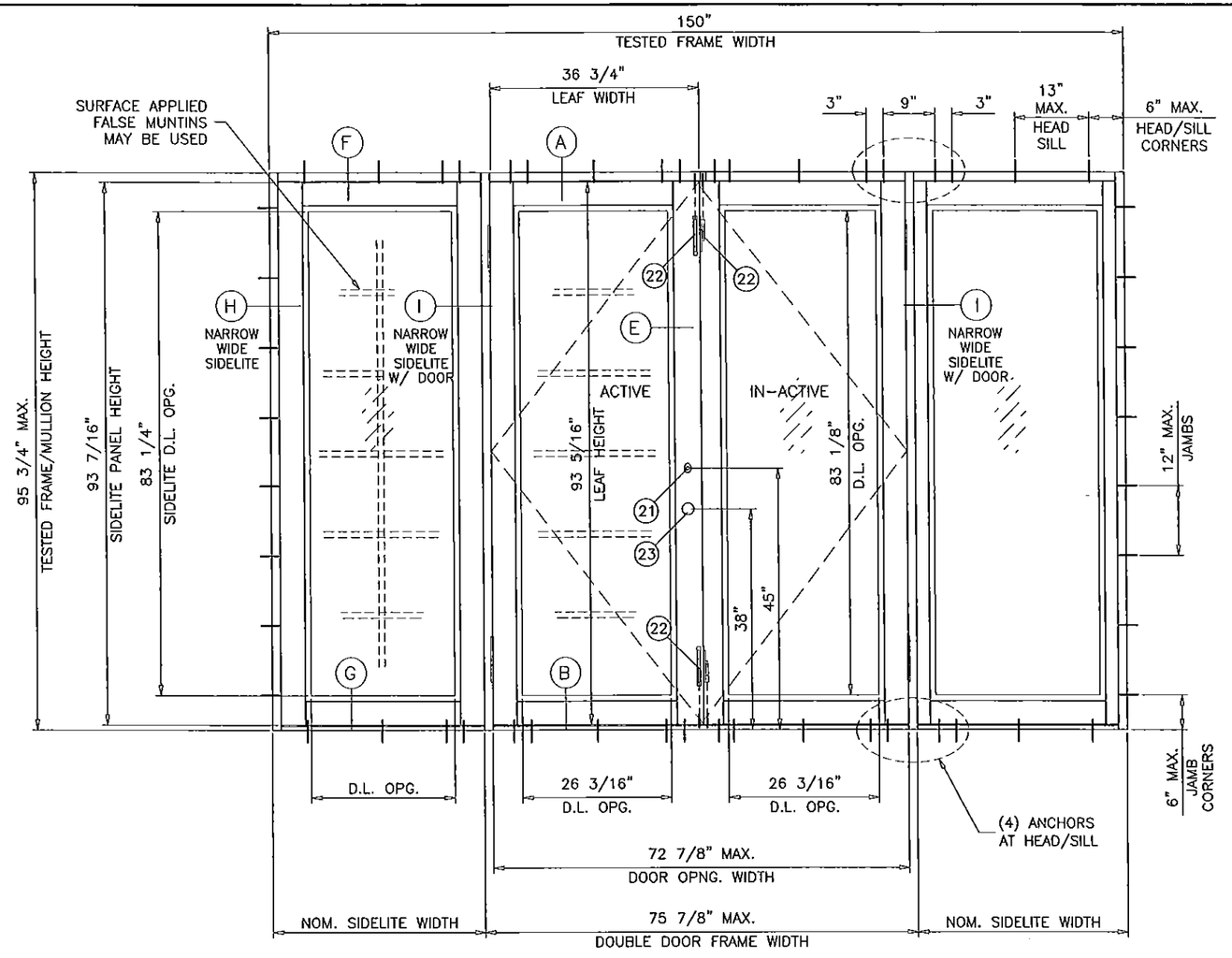

(OXXO)

ALTERNATE UNIT FRAME AREA MUST NOT EXCEED TESTED FRAME AREA 99.7 SQ. FT.

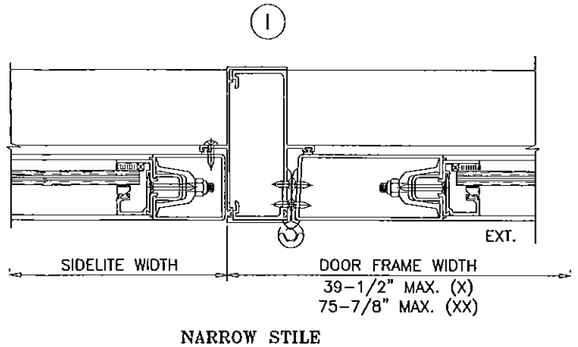

NARROW STILE
SIDELITE WITH DOOR

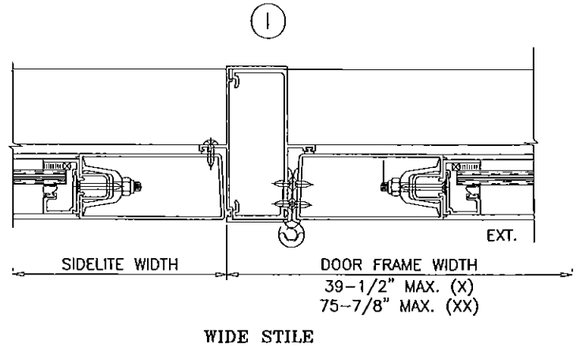

WIDE STILE
SIDELITE WITH DOOR

PRODUCT REVISED
as complying with the Florida
Building Code
Acceptance No 15-0512.22
Expiration Date 5/19/20
By Ishaq I. Hamid
Miami-Dade Product Control

Engr: JAVAD AHMAD
CIVIL
FLA. PE # 70592
C.A.N. 3538
OCT 14 2015

afc
AL-FAROOQ CORPORATION
ENGINEERS & PRODUCT DEVELOPMENT
1235 S.W. 87 AVE
MIAMI, FLORIDA 33174
TEL. (305) 264-8100 FAX. (305) 262-6978
COMP-ANL\W04-81UAW

SERIES REBECCA ALUM. OUTSWING FRENCH DOOR (L.M.I.)

UNIVERSAL IMPACT WINDOWS & DOORS
1675 W. 31ST PLACE
HIALEAH, FL. 33012
TEL (305) 825-7900 FAX (305) 825-5805

revisions:			
no	date	by	description
C	10.21.10		GENERAL REVISION
D	05.18.11		REV. PER BNC COMMENTS
E	02.14.12		NO CHANGE THIS SHEET
F	01.09.15		NO CHANGE THIS SHEET
G	10.15.15		REV. PER RER COMMENTS

date: 09-13-04
scale: 3/8" = 1"
dr. by: HAMID
chk. by:

drawing no.
W04-81

sheet 3 of 11

DESIGN LOAD CAPACITY – PSF SIDELITES WITH SIDELITES					
NOM. SIDELITE WIDTH INCHES	FRAME HEIGHT INCHES	NARROW STILE SIDELITE WITH SIDELITE		WIDE STILE SIDELITE WITH SIDELITE	
		EXT.(+)	INT.(–)	EXT.(+)	INT.(–)
32	82–1/4	65.0	75.0	65.0	75.0
34		65.0	75.0	65.0	75.0
36		65.0	75.0	65.0	75.0
37		65.0	75.0	65.0	75.0
39		61.8	71.3	61.8	71.3
42		57.4	66.2	57.4	66.2
44		54.8	63.2	54.8	63.2
32	84	65.0	75.0	65.0	75.0
34		65.0	75.0	65.0	75.0
36		65.0	75.0	65.0	75.0
37		65.0	75.0	65.0	75.0
39		61.8	71.3	61.8	71.3
42		57.4	66.2	57.4	66.2
32	90	65.0	75.0	65.0	75.0
34		65.0	75.0	65.0	75.0
36		65.0	75.0	65.0	75.0
37		65.0	75.0	65.0	75.0
39		61.8	71.3	61.8	71.3
32	95–3/4	65.0	75.0	65.0	75.0
34		65.0	73.7	65.0	75.0
36		65.0	71.9	65.0	75.0
37		65.0	71.1	65.0	75.0

NOTE:
FOR DOOR CAPACITIES SEE SHEET 2.
FOR SIDELITE WITH DOOR CAPACITIES SEE SHEET 3.
FOR SIDELITE WITH SIDELITE CAPACITIES SEE CHART ABOVE.
LOWER VALUES FROM DOOR OR SIDELITE CHARTS
WILL APPLY TO ENTIRE SYSTEM.
SEE SHEET 4.1 FOR SIDELITE WIDTHS.

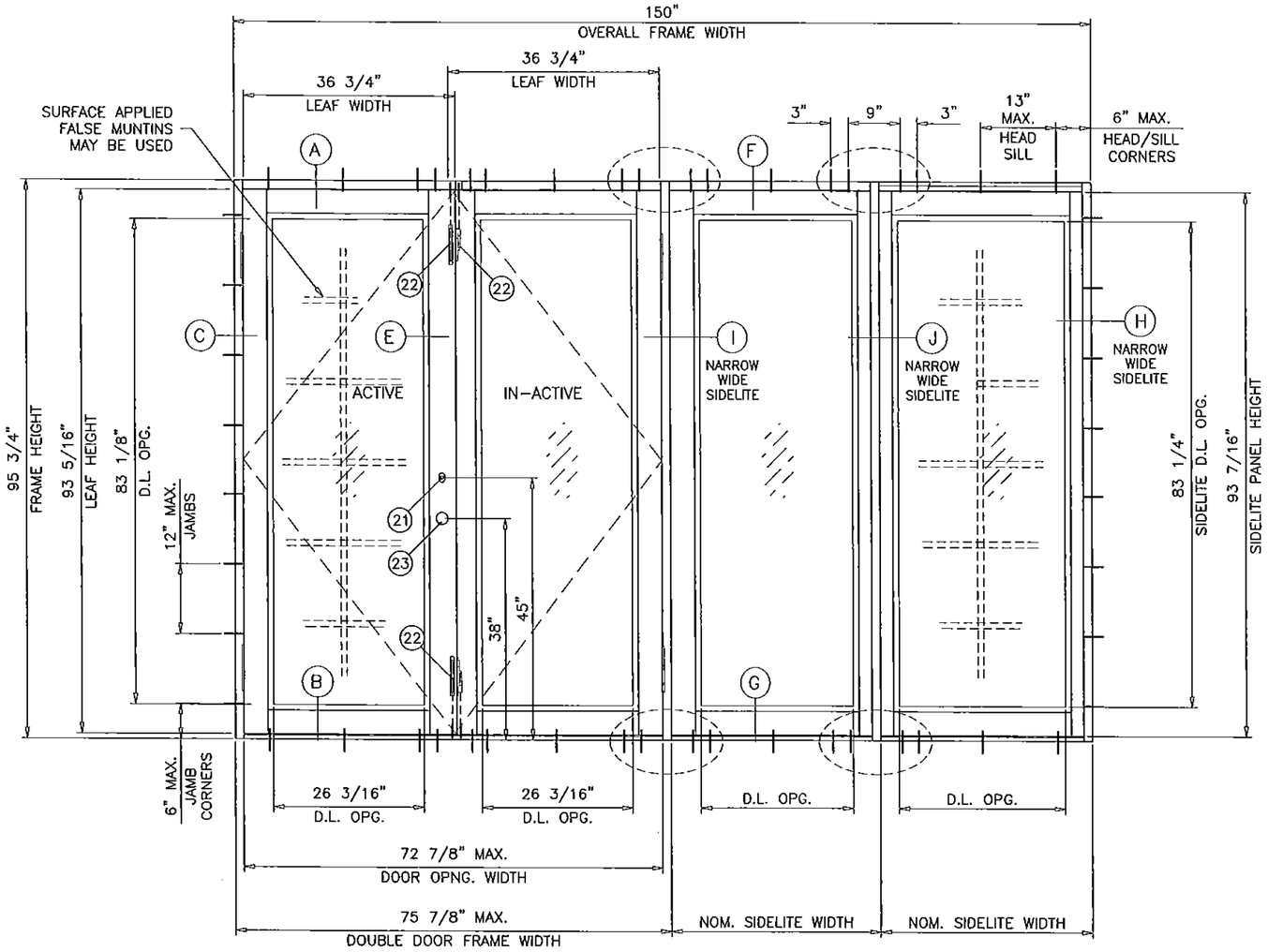

(XXOO)

ALTERNATE UNIT FRAME AREA MUST NOT EXCEED TESTED FRAME AREA 99.7 SQ. FT.

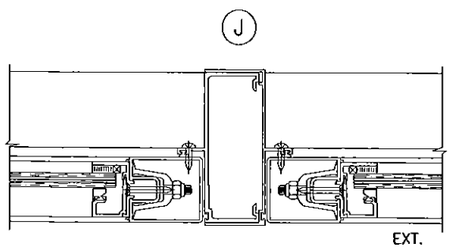

NARROW STILE
SIDELITE WITH SIDELITE

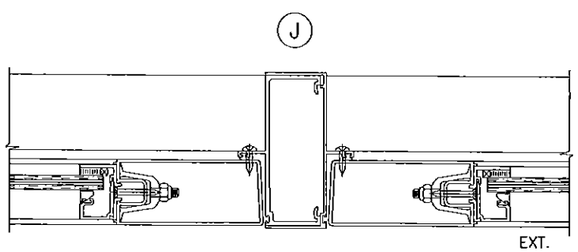

WIDE STILE
SIDELITE WITH SIDELITE

PRODUCT REVISED
as complying with the Florida Building Code
Acceptance No 15-0512.22
Expiration Date 5/19/20
By Product Control

Engr: JAVAD AHMAD
CIVIL
FLA. PE # 70592
C.A.N. 3538
OCT 14 2015

AL-FAROOQ CORPORATION
ENGINEERS & PRODUCT DEVELOPMENT
1235 S.W. 87 AVE
MIAMI, FLORIDA 33174
TEL (305) 264-8100 FAX (305) 262-6978

COMP–ANL\W04–81UAW

SERIES REBECCA ALUM. OUTSWING FRENCH DOOR (L.M.I.)

UNIVERSAL IMPACT WINDOWS & DOORS
1675 W. 31ST PLACE
HIALEAH, FL. 33012
TEL. (305) 825–7900 FAX (305) 825–5805

revisions:			
no	date	by	description
C	10.21.10		GENERAL REVISION
D	05.18.11		REV. PER BNC COMMENTS
E	02.14.12		NO CHANGE THIS SHEET
F	01.09.15		NO CHANGE THIS SHEET
G	10.15.15		REV. PER RER COMMENTS

date: 09–13–04
scale: 3/8" = 1"
dr. by: HAMID
chk. by:

drawing no.
W04–81

sheet 4 of 11

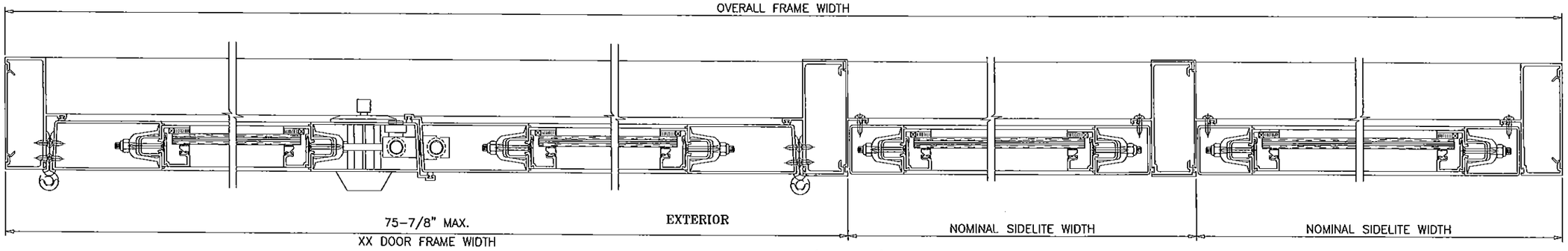

(XXOO)

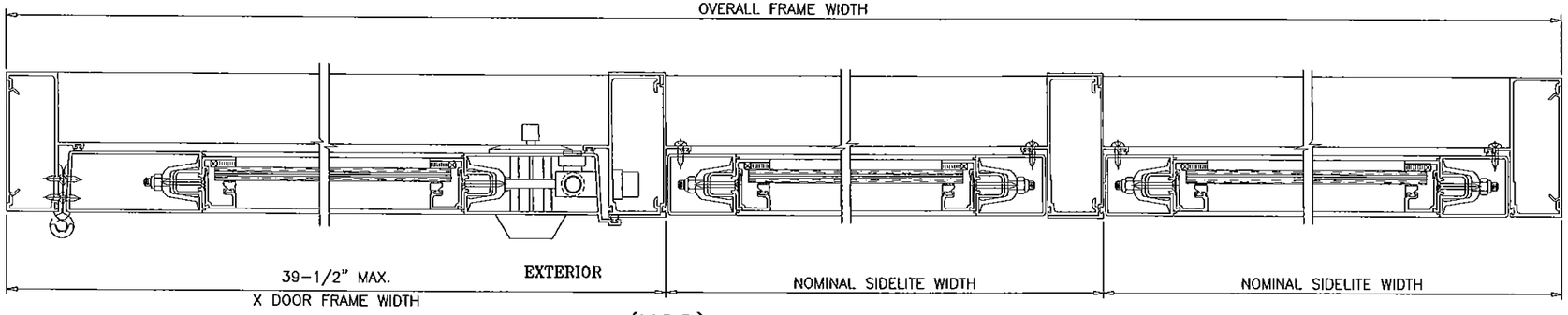

(XOO)

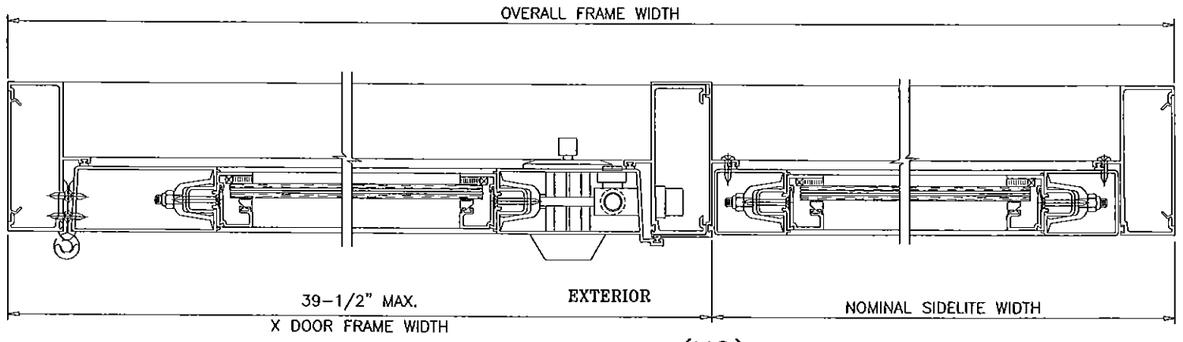

(XO)

SIDELITES MAY BE WIDE OR NARROW STILE WITHIN NOM. SIDELITE WIDTH PER CHART.
(NARROW STILE SHOWN)

PRODUCT REVISED
to complying with the Florida
Building Code
Acceptance No. 15-0512.22
Expiration Date 5/19/20
By Ishaq Ahmad
Miami Dade Product Control

Engr: JAVAD AHMAD
CIVIL
FLA. PE # 70592
C.A.No. 3538
OCT 14 2015

AL-FAROOQ CORPORATION
ENGINEERS & PRODUCT DEVELOPMENT
1235 S.W. 87 AVE
MIAMI, FLORIDA 33174
TEL (305) 264-8100 FAX. (305) 262-6978

COMP-ANL\W04-81UAW

SERIES REBECCA ALUM OUTSWING FRENCH DOOR (L.M.I.)

UNIVERSAL IMPACT WINDOWS & DOORS
1675 W. 31ST PLACE
HIALEAH, FL. 33012
TEL. (305) 825-7900 FAX (305) 825-5805

revisions:

no	date	by	description
C	10.21.10		GENERAL REVISION
D	05.18.11		REV. PER BNC COMMENTS
E	02.14.12		NO CHANGE THIS SHEET
F	01.09.15		NO CHANGE THIS SHEET
G	10.15.15		REV. PER RER COMMENTS

date: 09-13-04
scale: 3/8" = 1"
dr. by: HAMID
chk. by:

drawing no.
W04-81

sheet 4.1 of 11

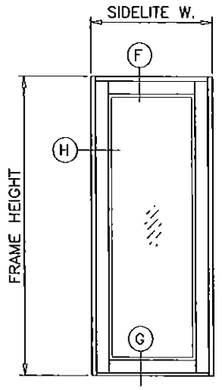

(O)

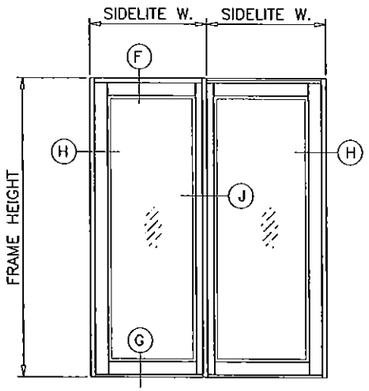

(OO)

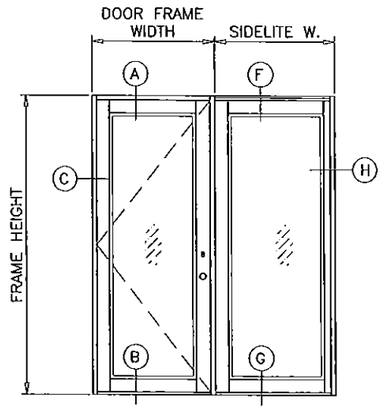

(XO)
(OX)

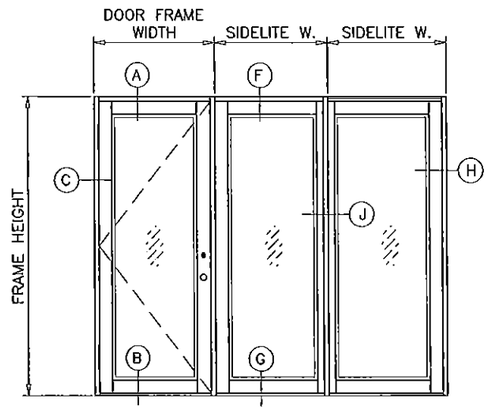

(XOO)
(OOX)

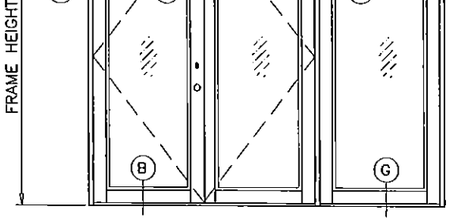

(XXO)
(OXX)

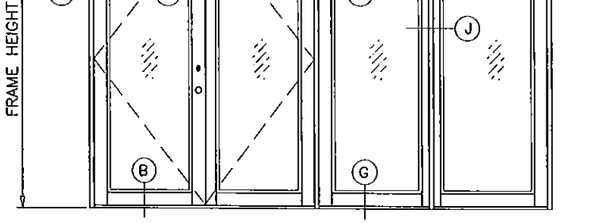

(XXOO)
(OOXX)

APPROVED SIDELITE CONFIGURATIONS

SIDELITES MAY BE NARROW OR WIDE STILES

PRODUCT REVISED
as complying with the Florida Building Code
Acceptance No 15-0512.22
Expiration Date 5/19/20
By Miami Dade Product Control

Engr: JAVAD AHMAD
CIVIL
FLA. PE # 70592
C.A.N. 3538
OCT 14 2015

AL-FAROOQ CORPORATION
ENGINEERS & PRODUCT DEVELOPMENT
1235 S.W. 87 AVE
MIAMI, FLORIDA 33174
TEL. (305) 264-8100 FAX. (305) 262-6978
COMP-ANL\W04-81UAW

SERIES REBECCA ALUM OUTSWING FRENCH DOOR (L.M.I.)

UNIVERSAL IMPACT WINDOWS & DOORS
1675 W. 31ST PLACE
HIALEAH, FL. 33012
TEL (305) 825-7900 FAX (305) 825-5805

revisions:

no	date	by	description
G	10.15.15		REV. PER RER COMMENTS

date: 09-13-04
scale: 3/8" = 1"
dr. by: HAMID
chk. by:

drawing no.
W04-81

sheet 4.2 of 11

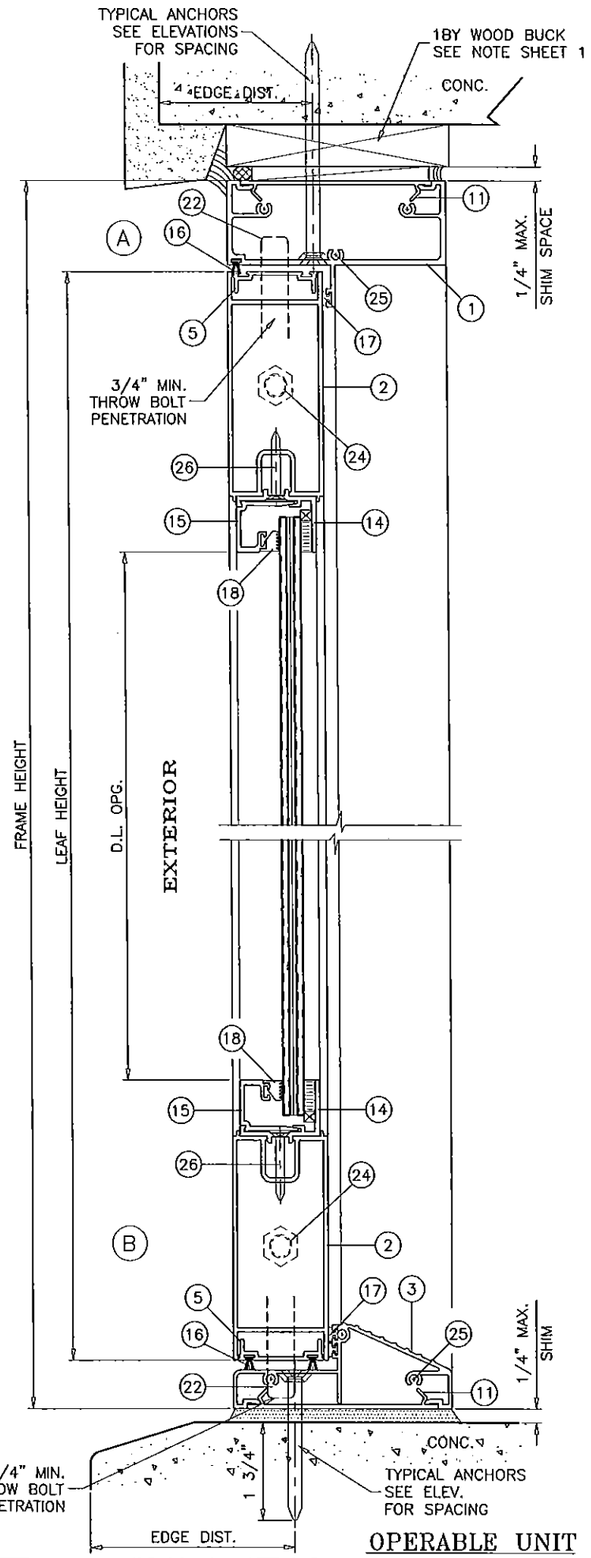

OPERABLE UNIT

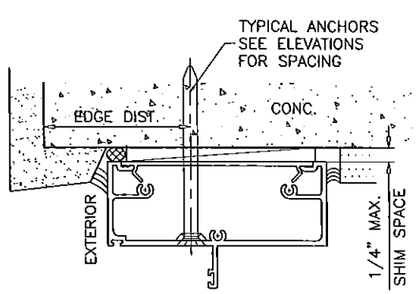

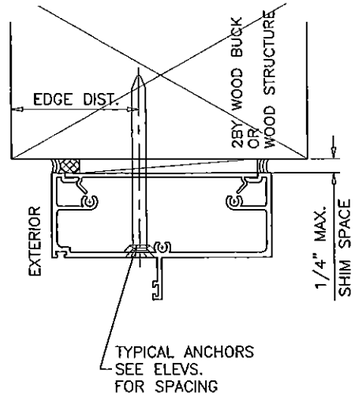

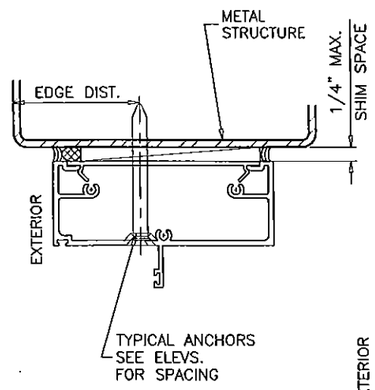

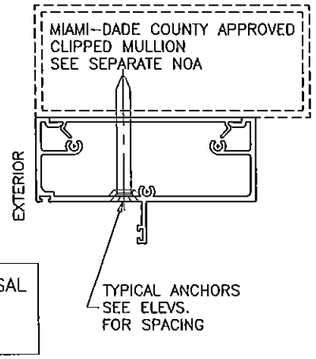

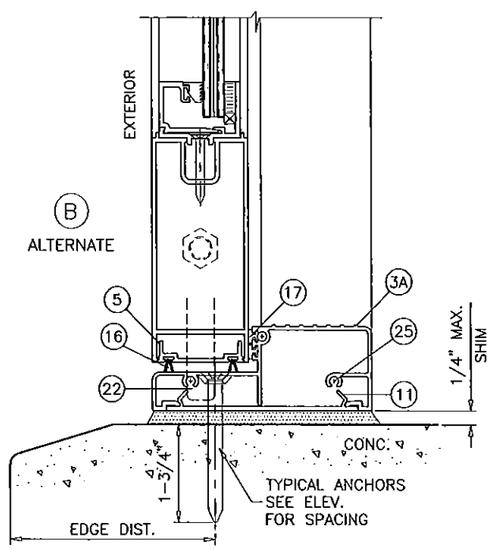

1BY OR 2BY WOOD BUCKS AND METAL STRUCTURE NOT BY UNIVERSAL MUST SUSTAIN LOADS IMPOSED BY GLAZING SYSTEM AND TRANSFER THEM TO THE BUILDING STRUCTURE.

TYPICAL ANCHORS: SEE ELEV. FOR SPACING

1/4" DIA. ULTRACON BY 'ELCO' (Fu=177 KSI, Fy=155 KSI)

INTO 2BY WOOD BUCKS OR WOOD STRUCTURES
1-1/2" MIN. PENETRATION INTO WOOD (HEAD/JAMBS)

THRU 1BY BUCKS INTO CONC. OR MASONRY
1-1/4" MIN. EMBED INTO CONCRETE (HEAD)
1-1/4" MIN. EMBED INTO CONC. OR MASONRY (JAMBS)

DIRECTLY INTO CONC. OR MASONRY
1-1/4" MIN. EMBED INTO CONCRETE (HEAD)
1-3/4" MIN. EMBED INTO CONCRETE (SILL)
1-1/4" MIN. EMBED INTO CONC. OR MASONRY (JAMBS)

#14 SMS OR SELF DRILLING SCREWS (GRADE 2 CRS)

INTO METAL STRUCTURES (HEAD/SILL)
STEEL : 1/8" THK. MIN. (Fy = 36 KSI MIN.)
(STEEL IN CONTACT WITH ALUMINUM TO BE PLATED OR PAINTED)

INTO MIAMI-DADE COUNTY APPROVED MULLIONS
ALUMINUM : 1/8" THK. MIN. (6063-T5 MIN.)
(NO SHIM SPACE)

TYPICAL EDGE DISTANCE

INTO CONCRETE AND MASONRY = 2-1/2" MIN.
INTO WOOD STRUCTURE = 1" MIN.
INTO METAL STRUCTURE = 3/4" MIN.

WOOD AT HEAD, SILL OR JAMBS SG = 0.55 MIN.
CONCRETE AT HEAD, SILL OR JAMBS f'c = 3000 PSI MIN.
C-90 HOLLOW/FILLED BLOCK AT JAMBS f'm = 2000 PSI MIN.

PRODUCT REVISED
as complying with the Florida Building Code
Acceptance No. 15-0512.22
Expiration Date 5/19/20
Miami-Dade Product Control

Engr: JAVAD AHMAD
CIVIL
FLA. PE # 70592
C.A.N. 3538
OCT 14 2015

DOOR DETAILS

AL-FAROOQ CORPORATION
ENGINEERS & PRODUCT DEVELOPMENT
1235 S.W. 87 AVE
MIAMI, FLORIDA 33174
TEL. (305) 264-8100 FAX. (305) 262-6978

COMP-ANL\W04-81UAW

SERIES REBECCA ALUM OUTSWING FRENCH DOOR (L.M.I.)

UNIVERSAL IMPACT WINDOWS & DOORS
1675 W. 31ST PLACE
HIALEAH, FL. 33012
TEL (305) 825-5900 FAX (305) 825-5805

revisions:

no	date	by	description
C	10.21.10		GENERAL REVISION
D	05.18.11		REV. PER BNC COMMENTS
E	02.14.12		NO CHANGE THIS SHEET
F	01.09.15		UPDATED TO 2014 FBC
G	10.15.15		REV. PER RER COMMENTS

date: 09-13-04
scale: 3/8" = 1"
dr. by: HAMID
chk. by:

drawing no.
W04-81

sheet 5 of 11

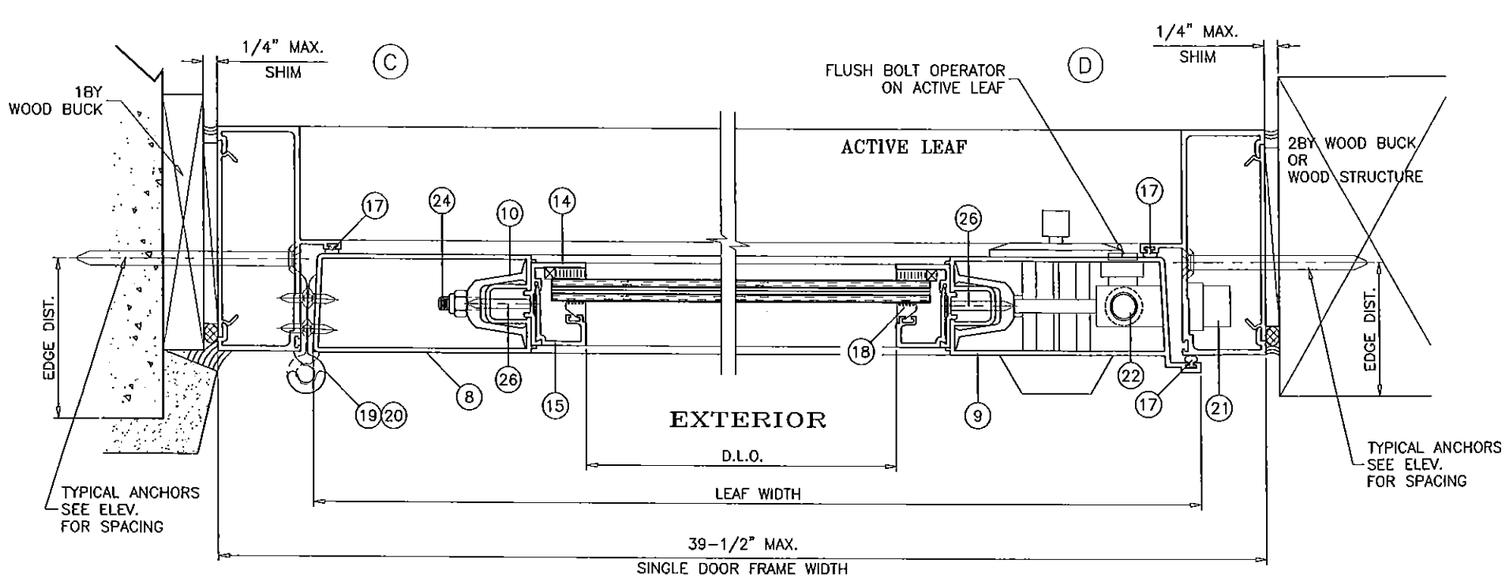

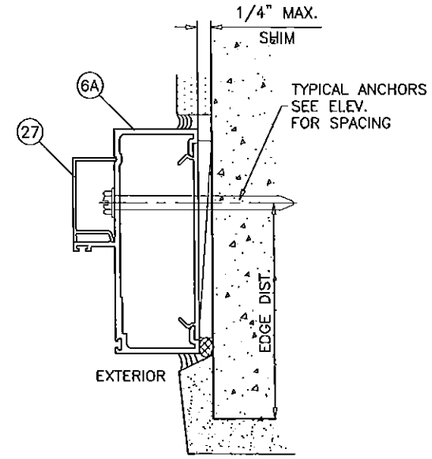

ALT. DOOR FRAME JAMB

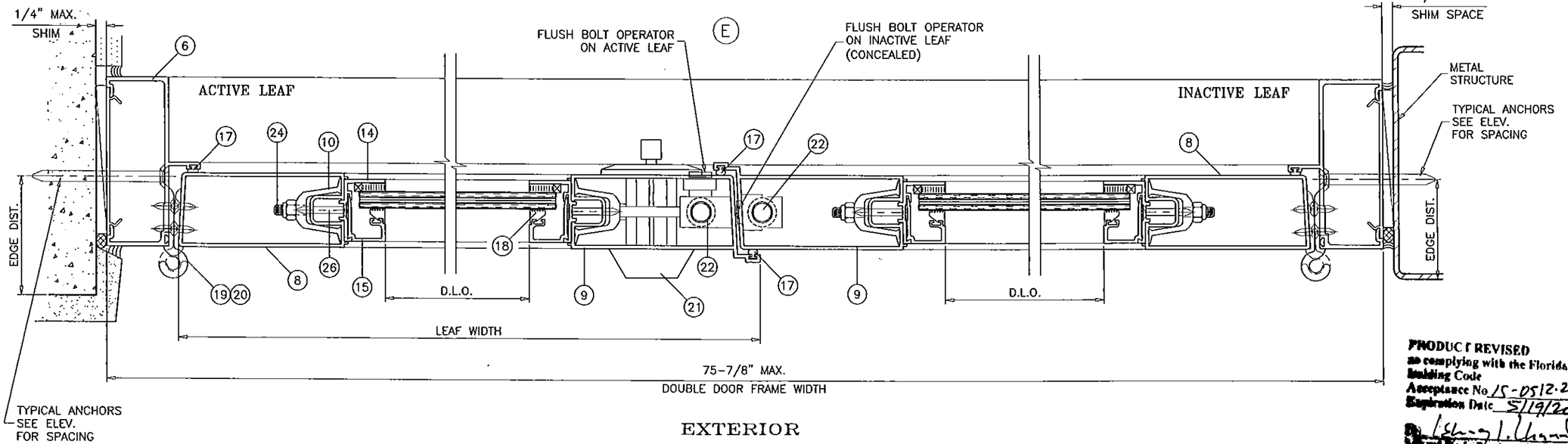

EXTERIOR

PRODUCT REVISED
as complying with the Florida Building Code
Acceptance No. 15-0512.22
Expiration Date 5/19/20
By [signature]
Miami-Dade Product Control

Engr: JAVAD AHMAD
CIVIL
FLA. PE # 70592
C.A.N. 3538
OCT 4 2015

DOOR DETAILS

AL-FAROOQ CORPORATION
ENGINEERS & PRODUCT DEVELOPMENT
1235 S.W. 87 AVE
MIAMI, FLORIDA 33174
TEL. (305) 264-8100 FAX. (305) 262-6978
COMP-ANL\W04-81UAW

SERIES REBECCA ALUM OUTSWING FRENCH DOOR (L.M.I.)

UNIVERSAL IMPACT WINDOWS & DOORS
1675 W. 31ST PLACE
HIALEAH, FL. 33012
TEL. (305) 825-7900 FAX (305) 825-5805

revisions:

no	date	by	description
C	10.21.10		GENERAL REVISION
D	05.18.11		REV. PER BNC COMMENTS
E	02.14.12		NO CHANGE THIS SHEET
F	01.09.15		NO CHANGE THIS SHEET
G	10.15.15		NO CHANGE THIS SHEET

date: 09-13-04
scale: 3/8" = 1"
dr. by: HAMID
chk. by:

drawing no.
W04-81

sheet 6 of 11

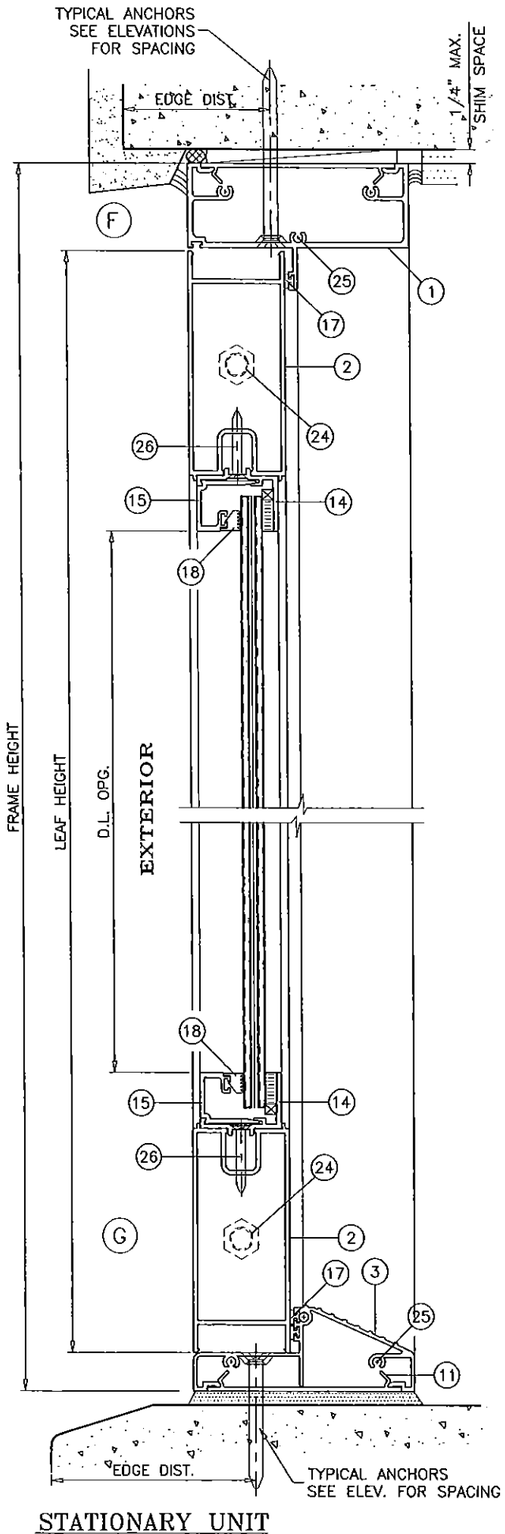

STATIONARY UNIT

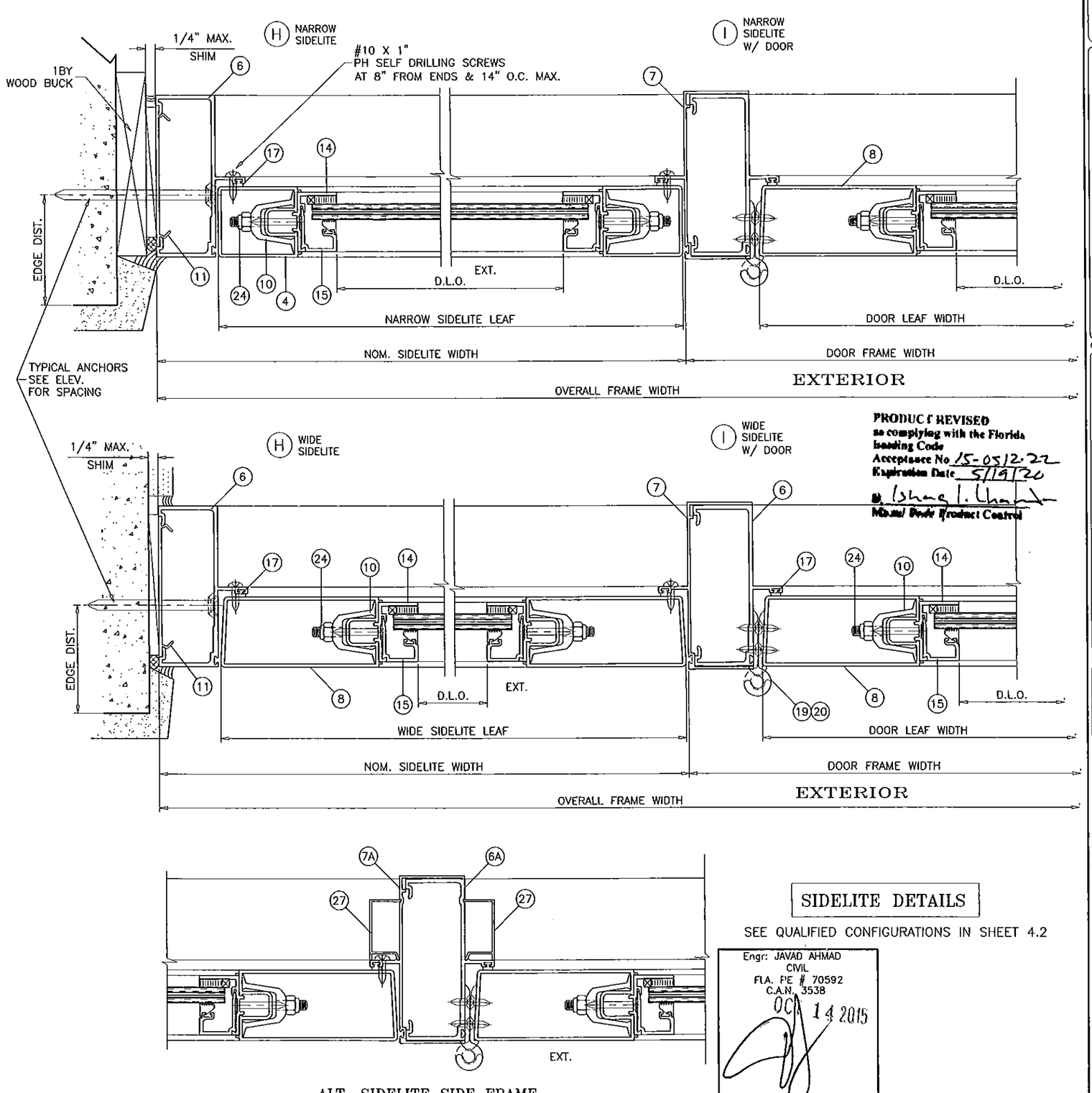

PRODUCT REVISED
as complying with the Florida Building Code
Acceptance No 15-05.12.22
Expiration Date 5/19/20
Miami-Dade Product Control

ALT. SIDELITE SIDE FRAME

SIDELITE DETAILS

SEE QUALIFIED CONFIGURATIONS IN SHEET 4.2

Engr: JAVAD AHMAD
CIVIL
FLA. PE # 70592
C.A.N. 3538
OCT 14 2015

AL-FAROOQ CORPORATION
ENGINEERS & PRODUCT DEVELOPMENT
1235 S.W. 87 AVE
MIAMI, FLORIDA 33174
TEL. (305) 264-8100 FAX. (305) 262-6978
COMP-ANL\W04-81UAW

SERIES REBECCA ALUM OUTSWING FRENCH DOOR (L.M.I.)

UNIVERSAL IMPACT WINDOWS & DOORS
1675 W. 31ST PLACE
HIALEAH, FL. 33012
TEL (305) 825-5805 FAX (305) 825-7900

revisions:			
no	date	by	description
C	10.21.10		GENERAL REVISION
D	05.18.11		REV. PER BNC COMMENTS
E	02.14.12		NO CHANGE THIS SHEET
F	01.09.15		NO CHANGE THIS SHEET
G	10.15.15		REV. PER RER COMMENTS

date: 09-13-04
scale: 3/8" = 1"
dr. by: HAMID
chk. by:

drawing no.
W04-81

(J) NARROW–NARROW SIDELITE

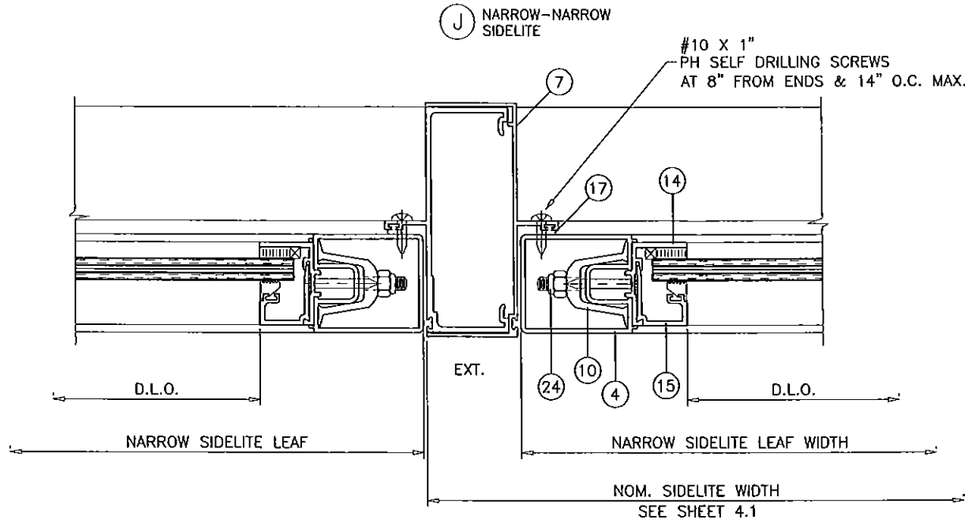

(J) WIDE–WIDE SIDELITE

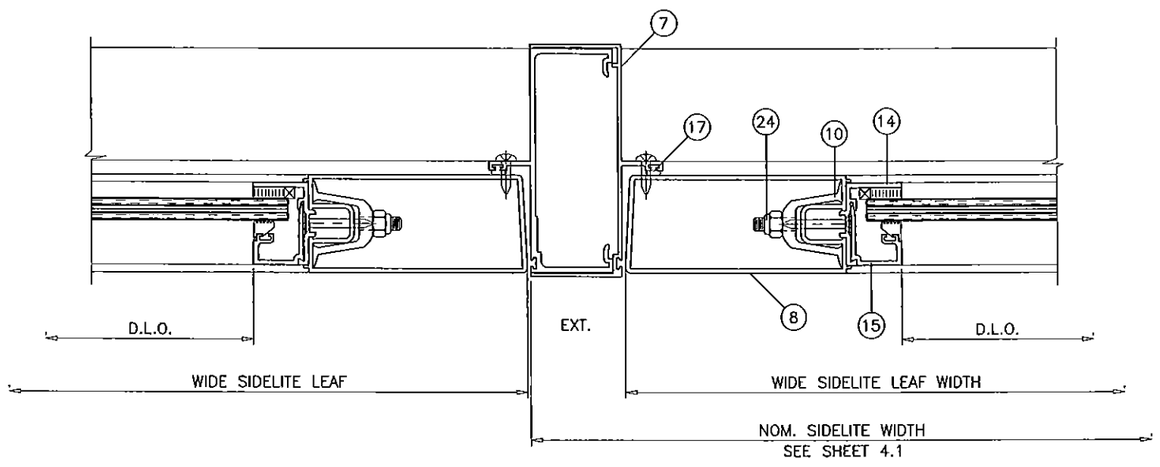

SEE QUALIFIED CONFIGURATIONS IN SHEET 4.2

PRODUCT REVISED
as complying with the Florida Building Code
Acceptance No 15-0512.22
Expiration Date 5/19/20
By Ishaq I. Ahmad
Miami Dade Product Control

Engr: JAVAD AHMAD
CIVIL
FLA. PE # 70592
C.A.N. 3538
OCT 14 2015

SIDELITE DETAILS

AL-FAROOQ CORPORATION
ENGINEERS & PRODUCT DEVELOPMENT
1235 S.W. 87 AVE
MIAMI, FLORIDA 33174
TEL. (305) 264-8100 FAX. (305) 262-6978
COMP-ANL\W04-81UAW

SERIES REBECCA ALUM OUTSWING FRENCH DOOR (L.M.I.)

UNIVERSAL IMPACT WINDOWS & DOORS
1675 W. 31ST PLACE
HIALEAH, FL. 33012
TEL. (305) 825-5805 FAX (305) 825-7900

revisions:			
no	date	by	description
C	10.21.10		GENERAL REVISION
D	05.18.11		REV. PER BNC COMMENTS
E	02.14.12		NO CHANGE THIS SHEET
F	01.09.15		NO CHANGE THIS SHEET
G	10.15.15		REV. PER RER COMMENTS

date: 09-13-04
scale: 3/8" = 1"
dr. by: HAMID
chk. by:

drawing no.
W04-81

sheet 8 of 11

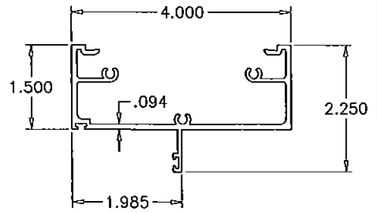

(1) FRAME HEAD

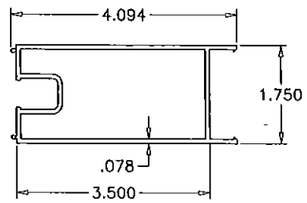

(2) DOOR LEAF HEAD & SILL

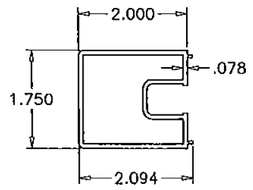

(4) NARROW SIDELITE STILE

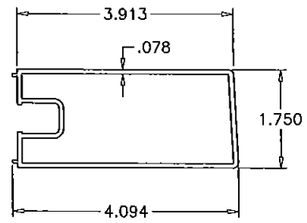

(8) DOOR LEAF JAMB SIDE

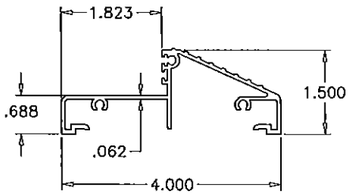

(3) THRESHOLD TYPE 1

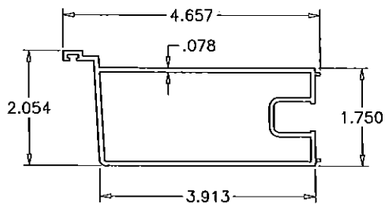

(9) DOOR LEAF LOCK SIDE

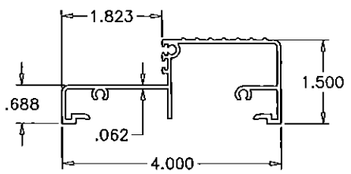

(3A) THRESHOLD TYPE 2

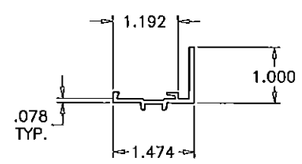

(14) GLASS ADAPTER

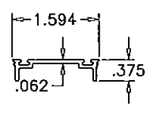

(5) COVER TOP & BOTTOM RAIL

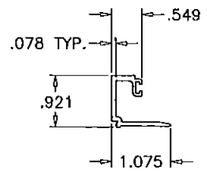

(15) GLASS STOP

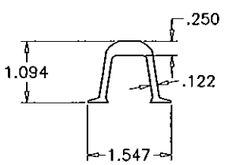

(10) JAMB STIFFENER

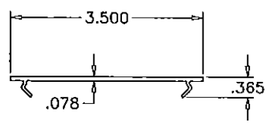

(11) SHEAR PLATE

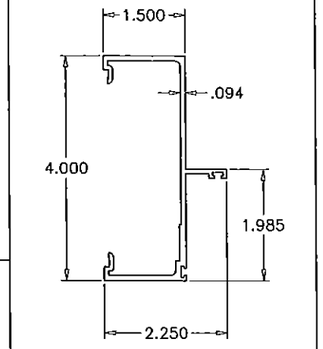

(6) DOOR FRAME JAMB

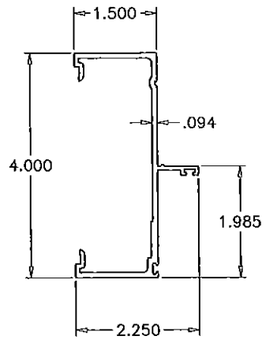

(6A) ALT. DOOR FRAME JAMB

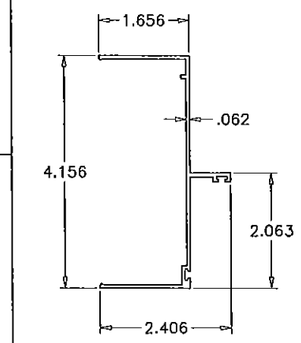

(7) SIDELITE SIDE FRAME

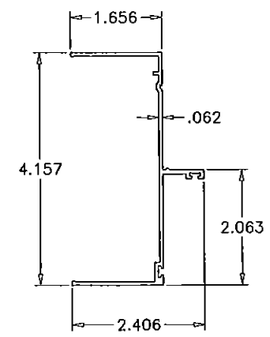

(7A) ALT. SIDELITE SIDE FRAME

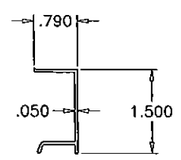

(27) FRAME SCREW COVER

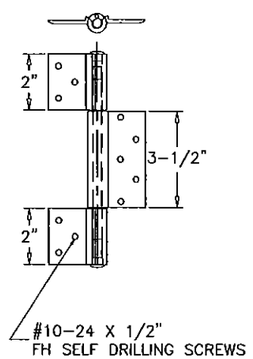

(19) (20) 3 PIECE HINGE

PRODUCT REVISED
as complying with the Florida
Building Code
Acceptance No. 15-0512.22
Expiration Date 5/19/20
By
Miami-Dade Product Control

Engr: JAVAD AHMAD
CIVIL
FLA. PE # 70592
C.A.N. 3538
OCT 14 2015

AL-FAROOQ CORPORATION
ENGINEERS & PRODUCT DEVELOPMENT
1235 S.W. 87 AVE
MIAMI, FLORIDA 33174
TEL (305) 264-8100 FAX. (305) 262-6978
COMP-ANL\W04-81UAW

SERIES REBECCA ALUM. OUTSWING FRENCH DOOR (L.M.I.)

UNIVERSAL IMPACT WINDOWS & DOORS
1675 W. 31ST PLACE
HIALEAH, FL. 33012
TEL. (305) 825-7900 FAX (305) 825-5805

revisions:			
no	date	by	description
C	10.21.10		GENERAL REVISION
D	05.18.11		REV. PER BNC COMMENTS
E	02.14.12		NO CHANGE THIS SHEET
F	01.09.15		NO CHANGE THIS SHEET
G	10.15.15		NO CHANGE THIS SHEET

date: 09-13-04
scale: 3/8" = 1"
dr. by: HAMID
chk. by:

drawing no.
W04-81

sheet 9 of 11

ITEM #	PART #	QUANTITY	DESCRIPTION	MATERIAL	MANF./SUPPLIER/REMARKS
1	UA-1089	AS REQD.	FRAME HEAD	6063-T6	
2	UA-1092	2/ LEAF	TOP AND BOTTOM RAIL	6063-T6	-
3	UA-1094	1	DOOR FRAME SILL TYPE 1	6063-T6	-
3A	UA-1094B	1	DOOR FRAME SILL TYPE 2	6063-T6	-
4	UA-1105	AS REQD.	NARROW SIDELITE STILE	6063-T6	-
5	UA-1096	2/ LEAF	SNAP COVER TOP & BOTTOM RAIL	6063-T5	-
6	UA-1091	2	DOOR FRAME JAMB	6063-T6	-
6A	UA-1091B	2	ALT. DOOR FRAME JAMB	6063-T6	-
7	UA-1099	AS REQD.	SIDELITE SIDE FRAME	6063-T6	-
7A	UA-1099B	AS REQD.	ALT. SIDELITE SIDE FRAME	6063-T6	-
8	UA-1090	1/ LEAF	DOOR LEAF JAMB - HINGE SIDE	6063-T6	-
9	UA-1093	1/ LEAF	DOOR LEAF - LOCK SIDE	6063-T6	-
10	UA-1095	4/ LEAF	JAMB STIFFENER	6063-T6	4" LONG
11	A-4008	AS REQD.	SHEAR PLATE @ ANCHOR LOCATIONS	6063-T6	6-7/8" LONG
12	-	AS REQD.	GLAZING TAPE SPACER (1/8" X 3/8" X 1" LONG)	-	4" FROM CORNERS & AT MIDSPAN OF VERTICALS
13	-	AS REQD.	WEDGE GASKET	VINYL	-
14	UA-1102	AS REQD.	GLASS ADAPTER	6063-T6	-
15	UA-1101	AS REQD.	GLASS STOP	6063-T6	-
16	S-7800	AS REQD.	FIN-SEAL WEATHERSTRIPPING	-	.187 X .330
17	TP-463	AS REQD.	BULB WEATHERSTRIPPING, DUROMETER 75	VINYL	TEAM PLASTICS INC.
18	UA-1103	AS REQD.	GLAZING WEDGE, DUROMETER 70	EPDM	TREMCO
19	UA-1097	2/ LEAF	CENTER HINGE WITH SS PIN	6063-T6	10" FROM TOP & BOTTOM
20	UA-1098	2/ LEAF	TOP & BOTTOM HINGE WITH SS PIN	6063-T6	10" FROM TOP & BOTTOM
21	-	1	DEAD BOLT LOCK SET	-	WESLOCK INTL. & SCHLAGE LOCK CO.
22	-	2/ LEAF	MANUALLY OPERATED FLUSH BOLT (ACTIVE/INACTIVE)	ZINC CAST	DELTA IND.
23	-	1	CONVENTIONAL DOOR KNOB SET	-	WESLOCK INTL. & SCHLAGE LOCK CO.
24	-	2/ LEAF	3/8" DIA. THREADED ROD	STEEL	-
25	#10 X 1"	AS REQD.	FRAME ASSY. SCREWS	-	PAN HEAD SMS
26	#8 X 1-1/4"	AS REQD.	GLAZING ADAPTER SCREWS, AT 6" FROM ENDS & 12" O.C.	-	FH SELF DRILLING
27	UA-1104	AS REQD.	FRAME SCREW COVER	6063-T5	-

SEALANTS:

FRAME AND LEAF CORNERS, INSTALLATION SCREWS AT SILL AND ALL METAL PARTS CONNECTIONS SEALED WITH WHITE/ALUMINUM COLORED SEALANT.

LOCKS:

ITEM# (22) MANUALLY OPERATED FLUSH BOLTS AT TOP AND BOTTOM OF EACH ACTIVE AND INACTIVE LEAF LOCK STILE WITH OPERATORS AT 12" AND 76" FROM BOTTOM.

ITEM# (21) DEAD BOLT LOCK BY WESLOCK INTL. OR HARLOCK WITH ALUM STRIKE PLATE AT ACTIVE LEAF LOCK STILE 45" FROM BOTTOM KEY OPERATED ON EXT. AND THUMB TURN ON INTERIOR.

ITEM# (23) CONVENTIONAL DOOR KNOB BY WESLOCK INTL. OR HARLOC WITH ALUM STRIKE PLATE AT ACTIVE LEAF LOCK STILE 38" FROM BOTTOM.

NOTE: FLUSH BOLTS ON ACTIVE & INACTIVE LEAF MUST BE ENGAGED DURING PERIODS OF HURRICANE WARNING.

PRODUCT REVISED
as complying with the Florida Building Code
Acceptance No 15-0512.22
Expiration Date 5/19/20
By [signature]
Miami Dade Product Control

Engr: JAVAD AHMAD
CIVIL
FLA. PE # 70592
C.A.N. 3538
OCT 14 2015
[signature]

AL-FAROOQ CORPORATION
ENGINEERS & PRODUCT DEVELOPMENT
1235 S.W. 87 AVE
MIAMI, FLORIDA 33174
TEL. (305) 264-8100 FAX. (305) 262-6978
COMP-ANL\W04-81UAW

SERIES REBECCA ALUM OUTSWING FRENCH DOOR (L.M.I.)

UNIVERSAL IMPACT WINDOWS & DOORS
1675 W. 31ST PLACE
HIALEAH, FL. 33012
TEL. (305) 825-7900 FAX (305) 825-5805

revisions:			
no	date	by	description
C	10.21.10		GENERAL REVISION
D	05.18.11		REV. PER BNC COMMENTS
E	02.14.12		NO CHANGE THIS SHEET
F	01.09.15		UPDATED TO 2014 FBC
G	10.15.15		NO CHANGE THIS SHEET

date: 09-13-04
scale: 3/8" = 1"
dr. by: HAMID
chk. by:

drawing no.
W04-81

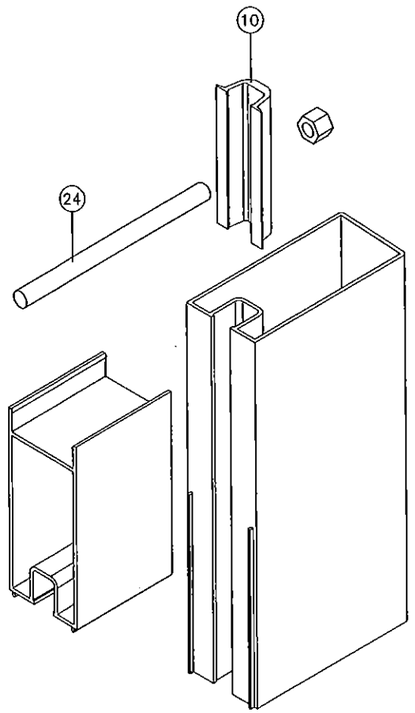

LEAF CORNER

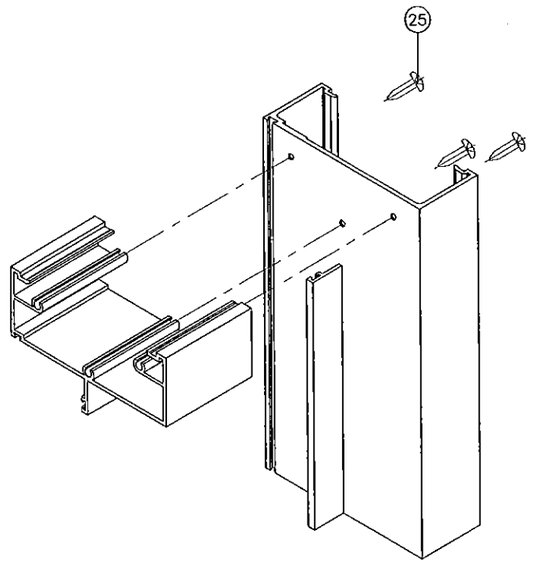

DOOR CORNER

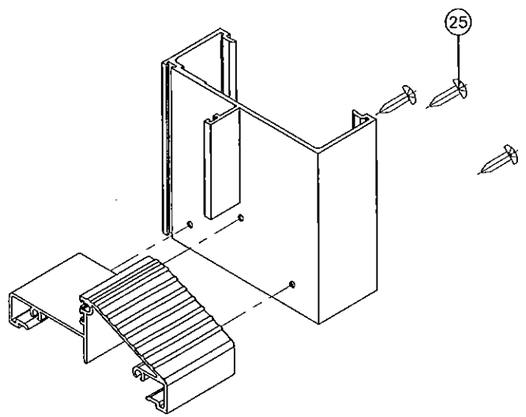

DOOR SILL CORNER

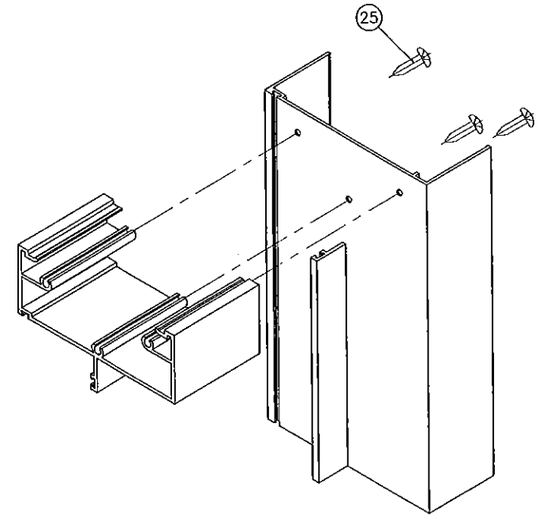

SIDELITE STILE TOP CORNER

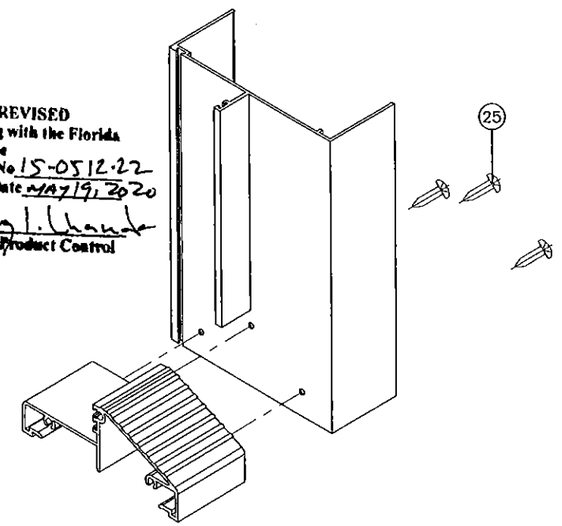

SIDELITE STILE BOTTOM CORNER

PRODUCT REVISED
as complying with the Florida
Building Code
Acceptance No. 15-0512.22
Expiration Date MAY 19, 2020
[signature]
National Code Product Control

Engr: JAVAD AHMAD
CIVIL
FLA. PE # 70592
C.A.N. 3538
OCT 14 2015

AL-FAROOQ CORPORATION
ENGINEERS & PRODUCT DEVELOPMENT
1235 S.W. 87 AVE
MIAMI, FLORIDA 33174
TEL (305) 264-8100 FAX. (305) 262-6978
COMP-ANL\W04-81UAW

SERIES REBECCA ALUM OUTSWING FRENCH DOOR (L.M.I.)

UNIVERSAL IMPACT WINDOWS & DOORS
1675 W. 31ST PLACE
HIALEAH, FL. 33012
TEL. (305) 825-5805 FAX (305) 825-5805

revisions:			
no	date	by	description
C	10.21.10		GENERAL REVISION
D	05.18.11		REV. PER BNC COMMENTS
E	02.14.12		NO CHANGE THIS SHEET
F	01.09.15		NO CHANGE THIS SHEET
G	10.15.15		NO CHANGE THIS SHEET

date: 09-13-04
scale: 3/8" = 1"
dr. by: HAMID
chk. by:

drawing no.
W04-81

sheet 11 of 11