MIAMI-DADE COUNTY
DEPARTMENT OF REGULATORY AND ECONOMIC RESOURCES (RER)
BOARD AND CODE ADMINISTRATION DIVISION

MIAMI-DADE COUNTY
PRODUCT CONTROL SECTION
11805 SW 26 Street, Room 208
T (786) 315-2590 F (786) 315-2599
www.miamidade.gov/economy

NOTICE OF ACCEPTANCE (NOA)

RC Home Showcase, Inc.
16115 NW 52nd Avenue
Miami Gardens, FL 33014

SCOPE:

This NOA is being issued under the applicable rules and regulations governing the use of construction materials. The documentation submitted has been reviewed and accepted by Miami-Dade County RER - Product Control Section to be used in Miami Dade County and other areas where allowed by the Authority Having Jurisdiction (AHJ).

This NOA shall not be valid after the expiration date stated below. The Miami–Dade County Product Control Section (In Miami–Dade County) and/or the AHJ (in areas other than Miami–Dade County) reserve the right to have this product or material tested for quality assurance purposes. If this product or material fails to perform in the accepted manner, the manufacturer will incur the expense of such testing and the AHJ may immediately revoke, modify, or suspend the use of such product or material within their jurisdiction. RER reserves the right to revoke this acceptance, if it is determined by Miami–Dade County Product Control Section that this product or material fails to meet the requirements of the applicable building code.

This product is approved as described herein, and has been designed to comply with the Florida Building Code, including the High Velocity Hurricane Zone.-

DESCRIPTION: Series "ML-100" Aluminum Tube Mullion – L.M.I.

APPROVAL DOCUMENT: Drawing No. **W04-05**, titled "Aluminum Tube Mullions", sheets 1 through 7 of 7, dated 05/02/04 with revision **F** dated 04/16/15, prepared by Al-Farooq Corporation, signed and sealed by Javad Ahmad, P.E., bearing the Miami-Dade County Product Control Revision stamp with the Notice of Acceptance number and expiration date by the Miami-Dade County Product Control Section.

MISSILE IMPACT RATING: Large and Small Missile Impact Resistant

LABELING: Each unit shall bear a permanent label with the manufacturer's name or logo, city, state, model/series, and following statement: "Miami-Dade County Product Control Approved", unless otherwise noted herein.

RENEWAL of this NOA shall be considered after a renewal application has been filed and there has been no change in the applicable building code negatively affecting the performance of this product.

TERMINATION of this NOA will occur after the expiration date or if there has been a revision or change in the materials, use, and/or manufacture of the product or process. Misuse of this NOA as an endorsement of any product, for sales, advertising or any other purposes shall automatically terminate this NOA. Failure to comply with any section of this NOA shall be cause for termination and removal of NOA.

ADVERTISEMENT: The NOA number preceded by the words Miami-Dade County, Florida, and followed by the expiration date may be displayed in advertising literature. If any portion of the NOA is displayed, then it shall be done in its entirety.

INSPECTION: A copy of this entire NOA shall be provided to the user by the manufacturer or its distributors and shall be available for inspection at the job site at the request of the Building Official.

This NOA **revises NOA# 13-1112.16** and consists of this page 1 and evidence pages E-1 and E-2, as well as approval document mentioned above.

The submitted documentation was reviewed by **Manuel Perez, P.E.**

MIAMI-DADE COUNTY APPROVED

2/3/16

RC Home Showcase, Inc.

NOTICE OF ACCEPTANCE: EVIDENCE SUBMITTED

A. DRAWINGS

1. Manufacturer's die drawings and sections.
   (Submitted under NOA No. 04-0608.05 and 09-0128.14)
2. Drawing No. **W04-05**, titled "Aluminum Tube Mullions", sheets 1 through 7 of 7, dated 05/02/04, with revision **F** dated 04/16/15, prepared by Al-Farooq Corporation, signed and sealed by Javad Ahmad, P.E.

B. TESTS

1. Test reports on: 1) Air Infiltration Test, per FBC, TAS 202-94
   2) Uniform Static Air Pressure Test, Loading per FBC, TAS 202-94
   3) Water Resistance Test, per FBC, TAS 202-94
   4) Large Missile Impact Test per FBC, TAS 201-94
   5) Cyclic Wind Pressure Loading per FBC, TAS 203-94

   along with marked-up drawings and installation diagram of aluminum single hung windows mulled together, prepared by Fenestration Testing Laboratory, Inc., Test Report No. **FTL-4024**, dated 01/14/04, signed and sealed by Edmundo J. Largaespada, P.E.
   (Submitted under NOA No. 04-0608.05)
2. Test reports on: 1) Air Infiltration Test, per FBC, TAS 202-94
   2) Uniform Static Air Pressure Test, Loading per FBC, TAS 202-94
   3) Water Resistance Test, per FBC, TAS 202-94
   4) Forced Entry Test, per FBC 2411.3.2.1, and TAS 202-94

   along with marked-up drawings and installation diagram of aluminum fixed and casement windows mulled together, prepared by Hurricane Engineering & Testing Inc., Test Report No. **HETI-03-1346**, dated 09/16/03, signed and sealed by Rafael E. Droz-Seda, P.E.
   (Submitted under NOA No. 04-0608.05)

C. CALCULATIONS

1. Anchor verification calculations and structural analysis, complying with **FBC 5th Edition (2014)**, dated 04/13/15, prepared by Al-Farooq Corp., signed and sealed by Javad Ahmad, P.E.

D. QUALITY ASSURANCE

1. Miami-Dade Department of Regulatory and Economic Resources (RER).

Manuel Perez, P.E.
Product Control Examiner
NOA No. 15-0512.23
Expiration Date: August 19, 2019
Approval Date: February 11, 2016

NOTICE OF ACCEPTANCE: EVIDENCE SUBMITTED

E MATERIAL CERTIFICATIONS

1. None.

F. STATEMENTS

1. Statement letter of conformance, complying with **FBC-5th Edition (2014)**, and of no financial interest, dated April 13, 2015, issued by Al-Farooq Corporation, signed and sealed by Javad Ahmad, P.E.
2. Laboratory compliance letters for Test Report No. **FTL-4024**, dated 01/14/04, issued by Fenestration Testing Laboratory, Inc., signed and sealed by Edmundo J. Largaespada, P.E.
   (Submitted under NOA No. 04-0608.05)
3. Laboratory compliance letters for Test Report No. **HETI-03-1346**, dated 09/16/03, issued by Hurricane Engineering & Testing, Inc., signed and sealed by Rafael E. Droz-Seda, P.E.
   (Submitted under NOA No. 04-0608.05)

G. OTHER

1. Notice of Acceptance No. **13-1112.16**, issued to R.C. Home Showcase, Inc. for their Series "**ML-100" Aluminum Tube Mullion – L.M.I.**, approved on 12/25/13 and expiring on 08/19/19.

Manuel Perez, P.E.
Product Control Examiner
NOA No. 15-0512.23
Expiration Date: August 19, 2019
Approval Date: February 11, 2016

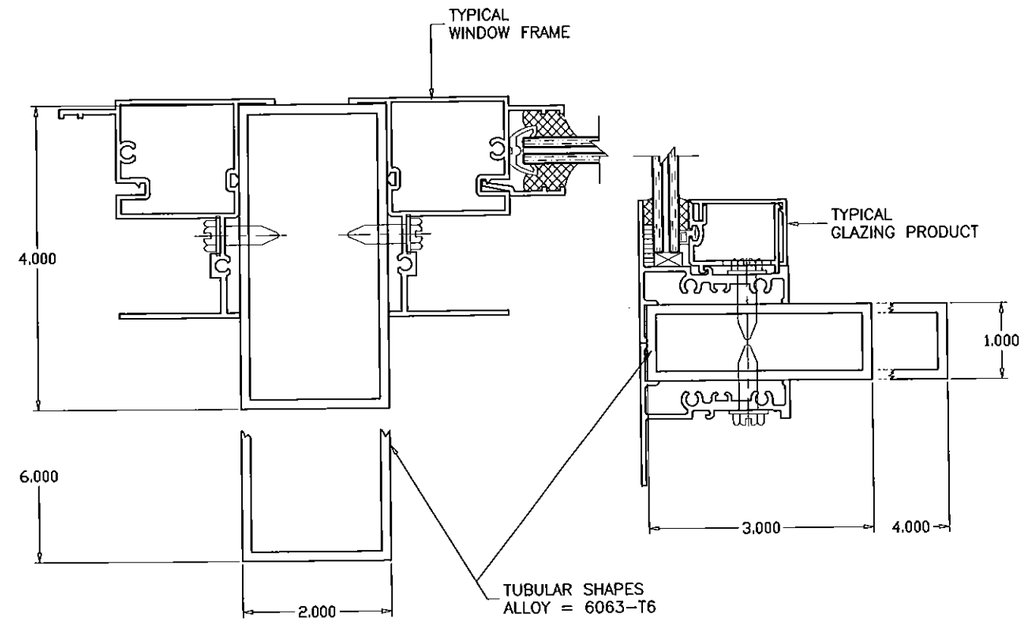

MULLION SYSTEM IS RATED FOR LARGE MISSILE IMPACT. AND CAN BE USED WITH ALL MIAMI-DADE COUNTY APPROVED IMPACT AND NON-IMPACT RESISTANT PRODUCTS.

RECTANGULAR ALUMINUM TUBE MULLIONS USING MULLION PROPERTIES ONLY

MULLIONS CONTAINING TYPICAL GLAZING PRODUCTS HORIZONTAL OR VERTICAL

SEE WINDOW OR DOOR APPROVAL FOR FASTENERS SIZES AND SPACING

NOTES:

THIS PRODUCT HAS BEEN DESIGNED AND TESTED TO COMPLY WITH THE REQUIREMENTS OF THE 2014 (5TH EDITION) FLORIDA BUILDING CODE INCLUDING HIGH VELOCITY HURRICANE ZONE (HVHZ).

ALL GLAZING PRODUCTS USED WITH THESE MULLIONS MUST MEET THE APPLICABLE BUILDING CODE REQUIREMENTS I.E: WIND LOAD, WATER INFILTRATION, FORCED ENTRY RESISTANCE, SAFEGUARDS ETC.

WOOD BUCKS BY OTHERS, MUST BE ANCHORED PROPERLY TO TRANSFER LOADS TO THE STRUCTURE.

ANCHORS SHALL BE AS LISTED, SPACED AS SHOWN ON DETAILS, EMBEDMENT TO BASE MATERIAL SHALL BE BEYOND WALL COVERING (STUCCO, TILE ETC.).

ANCHORING CONDITIONS OTHER THAN THOSE SHOWN IN THESE DETAILS ARE NOT PART OF THIS APPROVAL.

A LOAD DURATION INCREASE IS USED IN DESIGN OF ANCHORS INTO WOOD ONLY.

MATERIALS INCLUDING BUT NOT LIMITED TO STEEL/METAL SCREWS, THAT COME INTO CONTACT WITH OTHER DISSIMILAR MATERIALS SHALL MEET THE REQUIREMENTS OF THE 2014 FLORIDA BLDG. CODE.

INSTRUCTIONS:

USE CHARTS AND GRAPHS AS FOLLOWS.

STEP 1 DETERMINE DESIGN LOAD REQUIRED PER ASCE 7 FOR PARTICULAR OPENING.

STEP 2 USE APPROVED GLAZING PRODUCTS MEETING ABOVE LOAD REQUIREMENTS.

STEP 3 USE CONNECTION TO MULLION AS PER PRODUCT APPROVAL.

STEP 4 USING CHARTS ON SHEET 3 SELECT MULLION SIZE WITH DESIGN RATING MORE THAN DESIGN LOAD SPECIFIED IN STEP 1 ABOVE.

STEP 5 USING ANCHOR TYPES ON SHEET 5 THRU 7 AND ANCHOR CHARTS ON SHEET 4, SELECT ANCHOR TYPE WITH DESIGN RATING MORE THAN THE DESIGN LOADS SPECIFIED IN STEP 1 ABOVE.

Engr: JAVAD AHMAD
CIVIL
FLA. PE # 70592
C.A.N. 3538

NOV 20 2015

PRODUCT REVISED
as complying with the Florida
Building Code
Acceptance No. 15-0512.23
Expiration Date Aug. 19, 2019
By Manuel Perez
Miami-Dade Product Control

AL-FAROOQ CORPORATION
ENGINEERS & PRODUCT DEVELOPMENT
9360 SUNSET DRIVE, SUITE 220
MIAMI, FLORIDA 33173
TEL. (305) 264-8100 FAX. (305) 262-6978

MULLION\M04-05RC

ALUMINUM TUBE MULLIONS

RC HOME SHOWCASE, INC.
16115 NW 52nd AVE.
MIAMI, FL. 33014
TEL. (305) 392-6214 FAX. (305) 260-6432

revisions:

no	date	by	description
C	09.22.08		UPDATED FOR 2007 FBC
D	03.21.12		UPDATED TO 2010 FBC
E	10.10.13		MANUF. NAME REV.
F	04.16.15		UPDATED TO 2014 FBC

date: 05-02-04
scale: 1/2" = 1"
dr. by: HAMID
chk. by:

drawing no.
M04-05

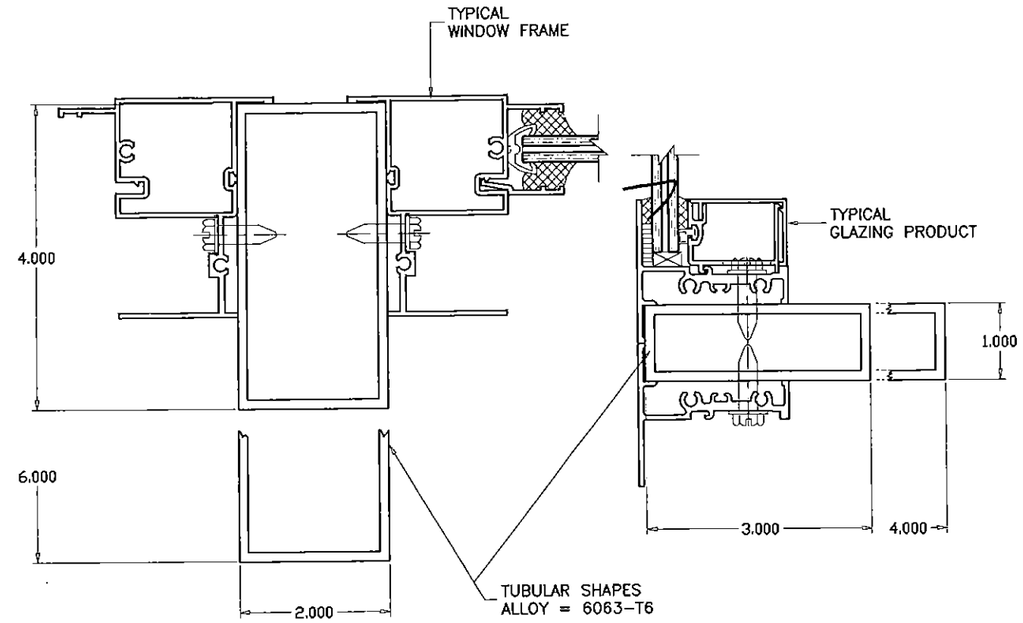

MULLIONS CONTAINING TYPICAL GLAZING PRODUCTS
HORIZONTAL OR VERTICAL

SEE WINDOW OR DOOR APPROVAL FOR FASTENERS SIZES AND SPACING

MULLION SYSTEM IS RATED FOR LARGE MISSILE IMPACT. AND CAN BE USED WITH ALL MIAMI-DADE COUNTY APPROVED IMPACT AND NON-IMPACT RESISTANT PRODUCTS.

RECTANGULAR ALUMINUM TUBE MULLIONS USING MULLION PROPERTIES ONLY

NOTES:

THIS PRODUCT HAS BEEN DESIGNED AND TESTED TO COMPLY WITH THE REQUIREMENTS OF THE FLORIDA BUILDING CODE INCLUDING HIGH VELOCITY HURRICANE ZONE (HVHZ). 5th Edition (2014)

ALL GLAZING PRODUCTS USED WITH THESE MULLIONS MUST MEET THE APPLICABLE BUILDING CODE REQUIREMENTS I.E: WIND LOAD, WATER INFILTRATION, FORCED ENTRY RESISTANCE, SAFEGUARDS ETC.

WOOD BUCKS BY OTHERS, MUST BE ANCHORED PROPERLY TO TRANSFER LOADS TO THE STRUCTURE.

ANCHORS SHALL BE AS LISTED, SPACED AS SHOWN ON DETAILS, EMBEDMENT TO BASE MATERIAL SHALL BE BEYOND WALL COVERING (STUCCO, TILE ETC.).

ANCHORING CONDITIONS OTHER THAN THOSE SHOWN IN THESE DETAILS ARE NOT PART OF THIS APPROVAL.

A LOAD DURATION INCREASE IS USED IN DESIGN OF ANCHORS INTO WOOD ONLY.

MATERIALS INCLUDING BUT NOT LIMITED TO STEEL/METAL SCREWS, THAT COME INTO CONTACT WITH OTHER DISSIMILAR MATERIALS SHALL MEET THE REQUIREMENTS OF THE FLORIDA BLDG. CODE.

INSTRUCTIONS:

USE CHARTS AND GRAPHS AS FOLLOWS.

STEP 1 DETERMINE DESIGN LOAD REQUIRED PER ASCE 7 FOR PARTICULAR OPENING.

STEP 2 USE APPROVED GLAZING PRODUCTS MEETING ABOVE LOAD REQUIREMENTS.

STEP 3 USE CONNECTION TO MULLION AS PER PRODUCT APPROVAL.

STEP 4 USING CHARTS ON SHEET 3 SELECT MULLION SIZE WITH DESIGN RATING MORE THAN DESIGN LOAD SPECIFIED IN STEP 1 ABOVE.

STEP 5 USING ANCHOR TYPES ON SHEET 5 THRU 7 AND ANCHOR CHARTS ON SHEET 4, SELECT ANCHOR TYPE WITH DESIGN RATING MORE THAN THE DESIGN LOADS SPECIFIED IN STEP 1 ABOVE.

Engr: JAVAD AHMAD
CIVIL
FI.A. PE # 70592
C.A.N. 3538

APR 20 2015

PRODUCT REVISED
as complying with the Florida
Building Code
Acceptance No 15-0512.23
Expiration Date Aug. 19, 2019
By Manuel Perez
Miami-Dade Product Control

AL-FAROOQ CORPORATION
ENGINEERS & PRODUCT DEVELOPMENT
1235 S.W. 87 AVE
MIAMI, FLORIDA 33174
TEL (305) 264-8100 FAX. (305) 262-6978

MULLION\M04-05RC

ALUMINUM TUBE MULLIONS

RC HOME SHOWCASE
2970 N.W. 75TH AVENUE
MIAMI, FL. 33122
TEL. (305) 392-6214 FAX. (786) 464-1582

revisions:

no	date	by	description
C	09.22.08		UPDATED FOR 2007 FBC
D	03.21.12		UPDATED TO 2010 FBC
E	10.10.13		MANUF. NAME REV.
F	04.16.15		UPDATED TO 2014 FBC

date: 05-02-04
scale: 1/2" = 1"
dr. by: HAMID
chk. by:

drawing no.
M04-05

sheet 1 of 7

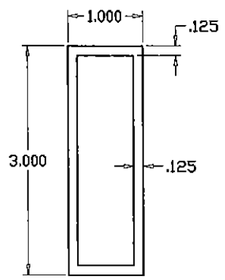

Ix IN^4	Sx IN^3
0.950	0.634

1 X 3
STD. MULLION
6063-T6

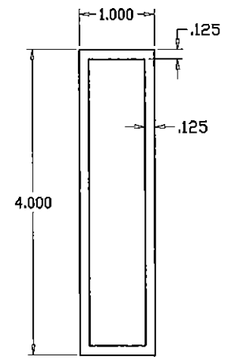

Ix IN^4	Sx IN^3
2.037	1.019

1 X 4
STD. MULLION
6063-T6

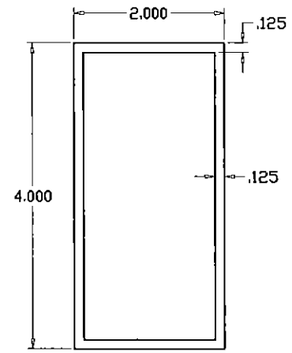

Ix IN^4	Sx IN^3
2.976	1.488

2 X 4
STD. MULLION
6063-T6

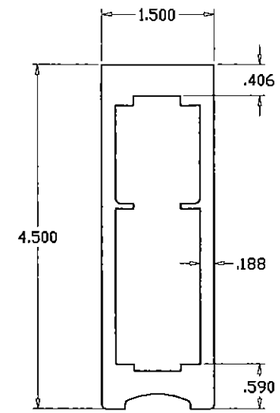

Ix IN^4	Sx IN^3
6.659	2.878

1-1/2 X 4-1/2
CUSTOM MULLION
6063-T6

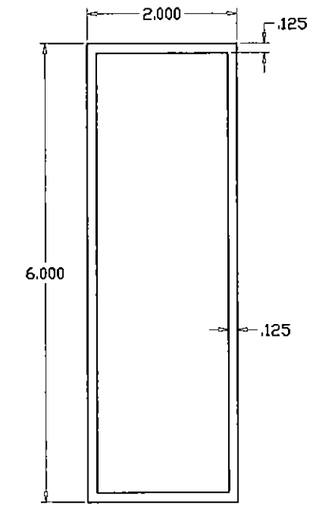

Ix IN^4	Sx IN^3
8.276	2.759

2 X 6
STD. MULLION
6063-T6

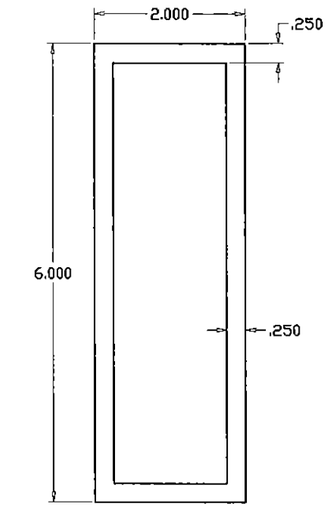

Ix IN^4	Sx IN^3
15.203	5.068

2 X 6
HEAVY MULLION
6063-T6

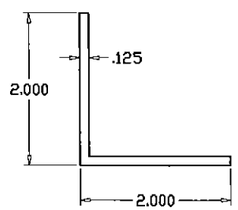

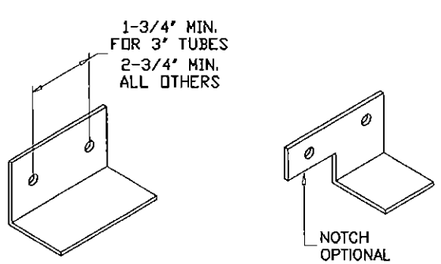

ANGLE CLIP
6063-T6

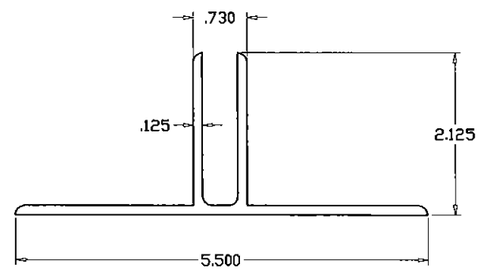

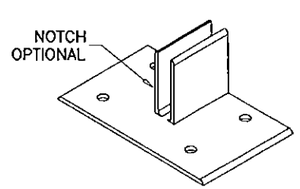

MULLION CLIP
6063-T6

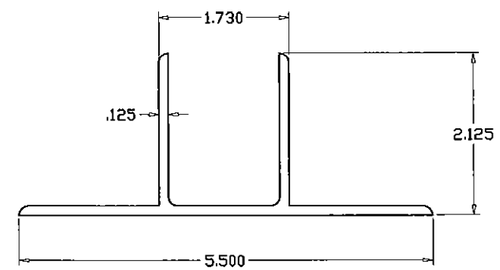

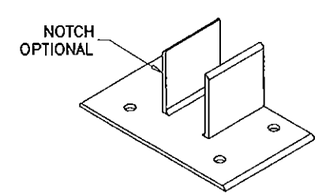

MULLION CLIP
6063-T6

Engr: JAVAD AHMAD
CIVIL
FLA. PE # 70592
C.A.N. 3538

APR 20 2015

PRODUCT REVISED
as complying with the Florida
Building Code
Acceptance No 15-0512.23
Expiration Date Aug. 19, 2019
By Manuel Perez
Miami Dade Product Control

AL-FAROOQ CORPORATION
ENGINEERS & PRODUCT DEVELOPMENT
1235 S.W. 87 AVE
MIAMI, FLORIDA 33174
TEL. (305) 264-8100 FAX. (305) 262-6978

MULLION\M04-05RC

ALUMINUM TUBE MULLIONS

RC HOME SHOWCASE
2970 N.W. 75TH AVENUE
MIAMI, FL. 33122
TEL (305) 392-6214 FAX. (786) 464-1582

revisions:

no	date	by	description
C	09.22.08		NO CHANGE THIS SHEET
D	03.21.12		UPDATED TO 2010 FBC
E	10.10.13		MANUF. NAME REV.
F	04.16.15		NO CHANGE THIS SHEET

date: 05-02-04
scale: 1/2" = 1"
dr. by: HAMID
chk. by:

drawing no.
M04-05

DESIGN LOAD CAPACITY – PSF (TUBE MULLIONS)

WINDOW DIMS. WIDTH (W)	MULL SPAN	1 X 3 STD.	1 X 4 STD.	2 X 4 STD.	1-1/2 X 4-1/2 CUSTOM	2 X 6 STD.	2 X 6 HEAVY
19-1/8"	38-3/8"	150.0	150.0	150.0	150.0	150.0	150.0
26-1/2"		150.0	150.0	150.0	150.0	150.0	150.0
30"		150.0	150.0	150.0	150.0	150.0	150.0
37"		150.0	150.0	150.0	150.0	150.0	150.0
42"		150.0	150.0	150.0	150.0	150.0	150.0
48"		150.0	150.0	150.0	150.0	150.0	150.0
54"		137.8	150.0	150.0	150.0	150.0	150.0
60"		124.0	150.0	150.0	150.0	150.0	150.0
66"		112.7	150.0	150.0	150.0	150.0	150.0
72"		103.3	150.0	150.0	150.0	150.0	150.0
19-1/8"	50-5/8"	150.0	150.0	150.0	150.0	150.0	150.0
26-1/2"		150.0	150.0	150.0	150.0	150.0	150.0
30"		142.5	150.0	150.0	150.0	150.0	150.0
37"		115.5	150.0	150.0	150.0	150.0	150.0
42"		101.8	150.0	150.0	150.0	150.0	150.0
48"		89.1	143.1	150.0	150.0	150.0	150.0
54"		79.2	127.2	150.0	150.0	150.0	150.0
60"		71.2	114.5	150.0	150.0	150.0	150.0
66"		64.8	104.1	150.0	150.0	150.0	150.0
72"		59.4	95.4	139.3	150.0	150.0	150.0
19-1/8"	60"	141.3	150.0	150.0	150.0	150.0	150.0
26-1/2"		102.0	150.0	150.0	150.0	150.0	150.0
30"		90.1	150.0	150.0	150.0	150.0	150.0
37"		73.0	132.2	150.0	150.0	150.0	150.0
42"		64.3	116.5	150.0	150.0	150.0	150.0
48"		56.3	101.9	148.8	150.0	150.0	150.0
54"		50.0	90.6	132.3	150.0	150.0	150.0
60"		45.0	81.5	119.0	150.0	150.0	150.0
66"		40.9	74.1	108.2	150.0	150.0	150.0
72"		37.5	67.9	99.2	150.0	150.0	150.0
19-1/8"	63"	122.1	150.0	150.0	150.0	150.0	150.0
26-1/2"		88.1	150.0	150.0	150.0	150.0	150.0
30"		77.8	147.9	150.0	150.0	150.0	150.0
37"		63.1	119.9	150.0	150.0	150.0	150.0
42"		55.6	105.6	150.0	150.0	150.0	150.0
48"		48.6	92.4	135.0	150.0	150.0	150.0
54"		43.2	82.2	120.0	150.0	150.0	150.0
60"		38.9	73.9	108.0	150.0	150.0	150.0
66"		35.4	67.2	98.2	150.0	150.0	150.0
72"		32.4	61.6	90.0	150.0	150.0	150.0

DESIGN LOAD CAPACITY – PSF (TUBE MULLIONS)

WINDOW DIMS. WIDTH (W)	MULL SPAN	1 X 3 STD.	1 X 4 STD.	2 X 4 STD.	1-1/2 X 4-1/2 CUSTOM	2 X 6 STD.	2 X 6 HEAVY
19-1/8"	74-1/4"	74.6	150.0	150.0	150.0	150.0	150.0
26-1/2"		53.8	115.4	150.0	150.0	150.0	150.0
30"		47.5	101.9	148.9	150.0	150.0	150.0
37"		38.5	82.6	120.7	150.0	150.0	150.0
42"		33.9	72.8	106.4	150.0	150.0	150.0
48"		29.7	63.7	93.1	150.0	150.0	150.0
54"		26.4	56.6	82.7	150.0	150.0	150.0
60"		23.8	51.0	74.4	150.0	144.1	150.0
66"		21.6	46.3	67.7	136.7	131.0	150.0
72"		–	42.5	62.0	125.3	120.1	150.0
19-1/8"	84"	51.5	110.4	150.0	150.0	150.0	150.0
26-1/2"		37.2	79.7	116.4	150.0	150.0	150.0
30"		32.8	70.4	102.8	150.0	150.0	150.0
37"		26.6	57.1	83.4	150.0	150.0	150.0
42"		23.4	50.3	73.5	150.0	150.0	150.0
48"		20.5	44.0	64.3	143.8	140.8	150.0
54"		–	39.1	57.1	127.8	125.1	150.0
60"		–	35.2	51.4	115.0	112.6	150.0
66"		–	32.0	46.7	104.6	102.4	150.0
72"		–	29.3	42.8	95.9	93.8	150.0
19-1/8"	96"	34.5	74.0	108.1	150.0	150.0	150.0
26-1/2"		24.9	53.4	78.0	150.0	150.0	150.0
30"		22.0	47.2	68.9	150.0	150.0	150.0
37"		–	38.2	55.9	125.0	139.8	150.0
42"		–	33.7	49.2	110.1	123.2	150.0
48"		–	29.5	43.1	96.3	107.8	150.0
54"		–	26.2	38.3	85.6	95.8	150.0
60"		–	23.6	34.4	77.1	86.2	150.0
66"		–	21.4	31.3	70.1	78.4	144.0
72"		–	–	28.7	64.2	71.8	132.0
19-1/8"	108"	24.2	51.9	75.9	150.0	150.0	150.0
26-1/2"		–	37.5	54.8	122.6	150.0	150.0
30"		–	33.1	48.4	108.3	134.5	150.0
37"		–	26.9	39.2	87.8	109.1	150.0
42"		–	23.7	34.6	77.3	96.1	150.0
48"		–	20.7	30.2	67.7	84.1	150.0
54"		–	–	26.9	60.1	74.7	137.3
60"		–	–	24.2	54.1	67.3	123.6
66"		–	–	22.0	49.2	61.2	112.3
72"		–	–	20.2	45.1	56.1	103.0

DESIGN LOAD CAPACITY – PSF (TUBE MULLIONS)

WINDOW DIMS. WIDTH (W)	MULL SPAN	1 X 3 STD.	1 X 4 STD.	2 X 4 STD.	1-1/2 X 4-1/2 CUSTOM	2 X 6 STD.	2 X 6 HEAVY
19-1/8"	120"	–	37.9	55.3	123.8	150.0	150.0
26-1/2"		–	27.3	39.9	89.3	111.0	150.0
30"		–	24.1	35.3	78.9	98.1	150.0
37"		–	–	28.6	64.0	79.5	146.1
42"		–	–	25.2	56.4	70.1	128.7
48"		–	–	22.0	49.3	61.3	112.6
54"		–	–	–	43.8	54.5	100.1
60"		–	–	–	39.5	49.0	90.1
66"		–	–	–	35.9	44.6	81.9
72"		–	–	–	32.9	40.9	75.1
19-1/8"	132"	–	28.5	41.6	93.0	115.6	150.0
26-1/2"		–	20.5	30.0	67.1	83.4	150.0
30"		–	–	26.5	59.3	73.7	135.4
37"		–	–	21.5	48.1	59.8	109.8
42"		–	–	–	42.4	52.6	96.7
48"		–	–	–	37.1	46.1	84.6
54"		–	–	–	32.9	40.9	75.2
60"		–	–	–	29.6	36.8	67.7
66"		–	–	–	27.0	33.5	61.5
72"		–	–	–	24.7	30.7	56.4
19-1/8"	144"	–	21.9	32.0	71.6	89.0	150.0
26-1/2"		–	–	23.1	51.7	64.3	118.0
30"		–	–	20.4	45.7	56.8	104.3
37"		–	–	–	37.0	46.0	84.5
42"		–	–	–	32.6	40.5	74.5
48"		–	–	–	28.5	35.5	65.2
54"		–	–	–	25.4	31.5	57.9
60"		–	–	–	22.8	28.4	52.1
66"		–	–	–	20.8	25.8	47.4
72"		–	–	–	–	23.7	43.4

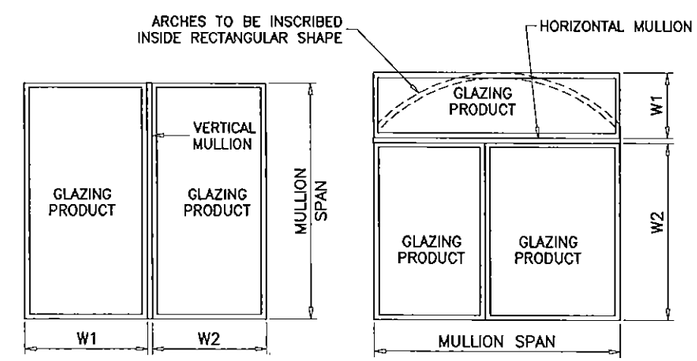

NOTE:
MULLIONS RATED IN THESE CHARTS MAY BE ORIENTED VERTICALLY OR HORIZONTALLY.
(INTERPOLATION BETWEEN WIDTHS ALLOWED)

TYPICAL MULLION ARRANGEMENTS

$$\text{WIDTH (W)} = \frac{W1 + W2}{2}$$

MULLIONS

Engr: JAVAD AHMAD
CML
FLA. PE # 70592
C.A.N. 3538

APR 20 2015

PRODUCT REVISED
as complying with the Florida Building Code
Acceptance No 15-0512.23
Expiration Date Aug. 19, 2019
By Manuel Perez
Miami Dade Product Control

AL-FAROOQ CORPORATION
ENGINEERS & PRODUCT DEVELOPMENT
1235 S.W. 87 AVE
MIAMI, FLORIDA 33174
TEL. (305) 264-8100 FAX. (305) 262-6978

MULLION\M04-05RC

ALUMINUM TUBE MULLIONS

RC HOME SHOWCASE
2970 N.W. 75TH AVENUE
MIAMI, FL. 33122
TEL (305) 392-6214 FAX. (786) 464-1582

revisions:

no	date	by	description
C	09.22.08		NO CHANGE THIS SHEET
D	03.21.12		NO CHANGE THIS SHEET
E	10.10.13		MANUF. NAME REV.
F	04.16.15		NO CHANGE THIS SHEET

date: 05-02-04
scale:
dr. by: HAMID
chk. by:

drawing no.
M04-05

DESIGN LOAD CAPACITY - PSF							
WINDOW DIMS.		ANCHORS TYPE					
WIDTH (W)	MULL SPAN	A2	A4	AA2	AA4	B2	B4
19-1/8"	38-3/8"	150.0	150.0	150.0	150.0	150.0	150.0
26-1/2"		150.0	150.0	150.0	150.0	150.0	150.0
30"		150.0	150.0	150.0	150.0	150.0	150.0
37"		122.9	150.0	150.0	150.0	150.0	150.0
42"		108.3	150.0	150.0	150.0	150.0	150.0
48"		94.7	150.0	150.0	150.0	143.2	150.0
54"		84.2	150.0	150.0	150.0	127.3	150.0
60"		75.8	150.0	145.1	150.0	114.6	150.0
66"		68.9	137.8	131.9	150.0	104.2	150.0
72"		63.2	126.3	120.9	150.0	95.5	150.0
19-1/8"	50-5/8"	150.0	150.0	150.0	150.0	150.0	150.0
26-1/2"		130.1	150.0	150.0	150.0	150.0	150.0
30"		114.9	150.0	150.0	150.0	150.0	150.0
37"		93.2	150.0	150.0	150.0	121.6	150.0
42"		82.1	150.0	150.0	150.0	107.1	150.0
48"		71.8	143.6	137.5	150.0	93.7	150.0
54"		63.8	127.7	122.2	150.0	83.3	150.0
60"		57.5	114.9	110.0	150.0	75.0	150.0
66"		52.2	104.5	100.0	150.0	68.2	136.4
72"		47.9	95.8	91.7	150.0	62.5	125.0
19-1/8"	60"	150.0	150.0	150.0	150.0	150.0	150.0
26-1/2"		109.8	150.0	150.0	150.0	150.0	150.0
30"		97.0	150.0	150.0	150.0	146.6	150.0
37"		78.6	150.0	150.0	150.0	118.8	150.0
42"		69.3	138.5	132.6	150.0	104.7	150.0
48"		60.6	121.2	116.0	150.0	91.6	150.0
54"		53.9	107.7	103.1	150.0	81.4	150.0
60"		48.5	97.0	92.8	150.0	73.3	146.6
66"		44.1	88.1	84.4	150.0	66.6	133.2
72"		40.4	80.8	77.3	150.0	61.1	122.1
19-1/8"	63"	144.9	150.0	150.0	150.0	150.0	150.0
26-1/2"		104.5	150.0	150.0	150.0	150.0	150.0
30"		92.3	150.0	150.0	150.0	139.6	150.0
37"		74.9	149.7	143.3	150.0	113.2	150.0
42"		66.0	131.9	126.3	150.0	99.7	150.0
48"		57.7	115.4	110.5	150.0	87.2	150.0
54"		51.3	102.6	98.2	150.0	77.5	150.0
60"		46.2	92.3	88.4	150.0	69.8	139.6
66"		42.0	83.9	80.3	150.0	63.4	126.9
72"		38.5	77.0	73.7	147.3	58.2	116.3

DESIGN LOAD CAPACITY - PSF							
WINDOW DIMS.		ANCHORS TYPE					
WIDTH (W)	MULL SPAN	A2	A4	AA2	AA4	B2	B4
19-1/8"	74-1/4"	122.9	150.0	150.0	150.0	150.0	150.0
26-1/2"		88.7	150.0	150.0	150.0	134.1	150.0
30"		78.4	150.0	150.0	150.0	118.4	150.0
37"		63.5	127.1	121.6	150.0	96.0	150.0
42"		56.0	111.9	107.1	150.0	84.6	150.0
48"		49.0	97.9	93.7	150.0	74.0	148.0
54"		43.5	87.1	83.3	150.0	65.8	131.6
60"		39.2	78.4	75.0	150.0	59.2	118.4
66"		35.6	71.2	68.2	136.3	53.8	107.7
72"		32.6	65.3	62.5	125.0	49.3	98.7
19-1/8"	84"	108.6	150.0	150.0	150.0	150.0	150.0
26-1/2"		78.4	150.0	150.0	150.0	118.5	150.0
30"		69.3	138.5	132.6	150.0	104.7	150.0
37"		56.2	112.3	107.5	150.0	84.9	150.0
42"		49.5	98.9	94.7	150.0	74.8	149.6
48"		43.3	86.6	82.9	150.0	65.4	130.9
54"		38.5	77.0	73.7	147.3	58.2	116.3
60"		34.6	69.3	66.3	132.6	52.3	104.7
66"		31.5	63.0	60.3	120.5	47.6	95.2
72"		28.9	57.7	55.2	110.5	43.6	87.2
19-1/8"	96"	95.1	150.0	150.0	150.0	143.7	150.0
26-1/2"		68.6	137.2	131.3	150.0	103.7	150.0
30"		60.6	121.2	116.0	150.0	91.6	150.0
37"		49.1	98.3	94.1	150.0	74.3	148.5
42"		43.3	86.6	82.9	150.0	65.4	130.9
48"		37.9	75.8	72.5	145.0	57.3	114.5
54"		33.7	67.3	64.4	128.9	50.9	101.8
60"		30.3	60.6	58.0	116.0	45.8	91.6
66"		27.5	55.1	52.7	105.5	41.6	83.3
72"		25.3	50.5	48.3	96.7	38.2	76.3
19-1/8"	108"	84.5	150.0	150.0	150.0	127.7	150.0
26-1/2"		61.0	122.0	116.7	150.0	92.2	150.0
30"		53.9	107.7	103.1	150.0	81.4	150.0
37"		43.7	87.4	83.6	150.0	66.0	132.0
42"		38.5	77.0	73.7	147.3	58.2	116.3
48"		33.7	67.3	64.4	128.9	50.9	101.8
54"		29.9	59.9	57.3	114.6	45.2	90.5
60"		26.9	53.9	51.6	103.1	40.7	81.4
66"		24.5	49.0	46.9	93.7	37.0	74.0
72"		22.4	44.9	43.0	85.9	33.9	67.9

DESIGN LOAD CAPACITY - PSF							
WINDOW DIMS.		ANCHORS TYPE					
WIDTH (W)	MULL SPAN	A2	A4	AA2	AA4	B2	B4
19-1/8"	120"	76.0	150.0	145.6	150.0	114.9	150.0
26-1/2"		54.9	109.8	105.1	150.0	83.0	150.0
30"		48.5	97.0	92.8	150.0	73.3	146.6
37"		39.3	78.6	75.2	150.0	59.4	118.8
42"		34.6	69.3	66.3	132.6	52.3	104.7
48"		30.3	60.6	58.0	116.0	45.8	91.6
54"		26.9	53.9	51.6	103.1	40.7	81.4
60"		24.2	48.5	46.4	92.8	36.6	73.3
66"		22.0	44.1	42.2	84.4	33.3	66.6
72"		20.2	40.4	38.7	77.3	30.5	61.1
19-1/8"	132"	69.1	138.3	132.3	150.0	104.5	150.0
26-1/2"		49.9	99.8	95.5	150.0	75.4	150.0
30"		44.1	88.1	84.4	150.0	66.6	133.2
37"		35.7	71.5	68.4	136.8	54.0	108.0
42"		31.5	63.0	60.3	120.5	47.6	95.2
48"		27.5	55.1	52.7	105.5	41.6	83.3
54"		24.5	49.0	46.9	93.7	37.0	74.0
60"		22.0	44.1	42.2	84.4	33.3	66.6
66"		20.0	40.1	38.3	76.7	30.3	60.6
72"		18.4	36.7	35.2	70.3	27.8	55.5
19-1/8"	144"	63.4	126.7	121.3	150.0	95.8	150.0
26-1/2"		45.7	91.5	87.5	150.0	69.1	138.3
30"		40.4	80.8	77.3	150.0	61.1	122.1
37"		32.8	65.5	62.7	125.4	49.5	99.0
42"		28.9	57.7	55.2	110.5	43.6	87.2
48"		25.3	50.5	48.3	96.7	38.2	76.3
54"		22.4	44.9	43.0	85.9	33.9	67.9
60"		20.2	40.4	38.7	77.3	30.5	61.1
66"		18.4	36.7	35.2	70.3	27.8	55.5
72"		16.8	33.7	32.2	64.4	25.4	50.9

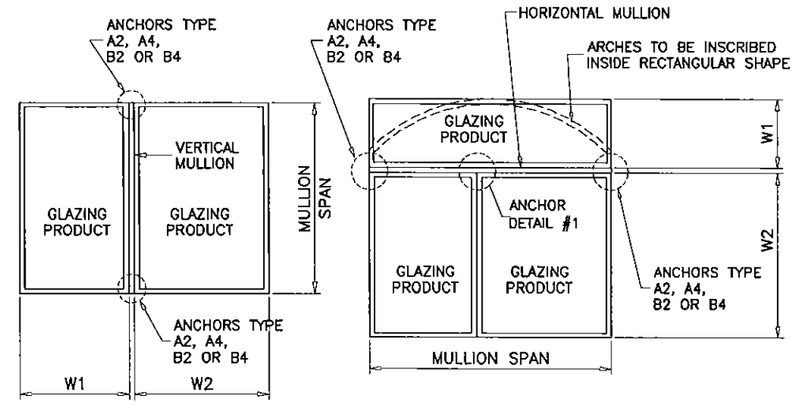

NOTE:
ANY ANCHOR CONDITION SHOWN HEREIN MAY COVER LOCATIONS AT HEAD, SILL OR JAMB ENDS.

FOR ANCHORS DESCRIPTION SEE SHEETS 5 THRU 7.
(INTERPOLATION BETWEEN WIDTHS OR SPANS ALLOWED)

TYPICAL MULLION ARRANGEMENTS

$$\text{WIDTH (W)} = \frac{W1 + W2}{2}$$

Engr: JAVAD AHMAD
CML
FLA. PE # 70592
C.A.N. 3538

APR 2 0 2015

PRODUCT REVISED
as complying with the Florida
Building Code
Acceptance No 15-0512.23
Expiration Date Aug 19, 2019
By Manuel Perez
Miami/Dade Product Control

ANCHORS

AL-FAROOQ CORPORATION
ENGINEERS & PRODUCT DEVELOPMENT
1235 S.W. 87 AVE
MIAMI, FLORIDA 33174
TEL. (305) 264-8100 FAX. (305) 262-6978

MULLION\M04-05RC

ALUMINUM TUBE MULLIONS

RC HOME SHOWCASE
2970 N.W. 75TH AVENUE
MIAMI, FL. 33122
TEL. (305) 392-6214 FAX. (786) 464-1582

revisions:

no	date	by	description
C	09.22.08		UPDATED FOR 2007 FBC
D	03.21.12		UPDATED TO 2010 FBC
E	10.10.13		MANUF. NAME REV.
F	04.16.15		UPDATED TO 2014 FBC

date: 05-02-04
scale:
dr. by: HAMID
chk. by:

drawing no.
M04-05

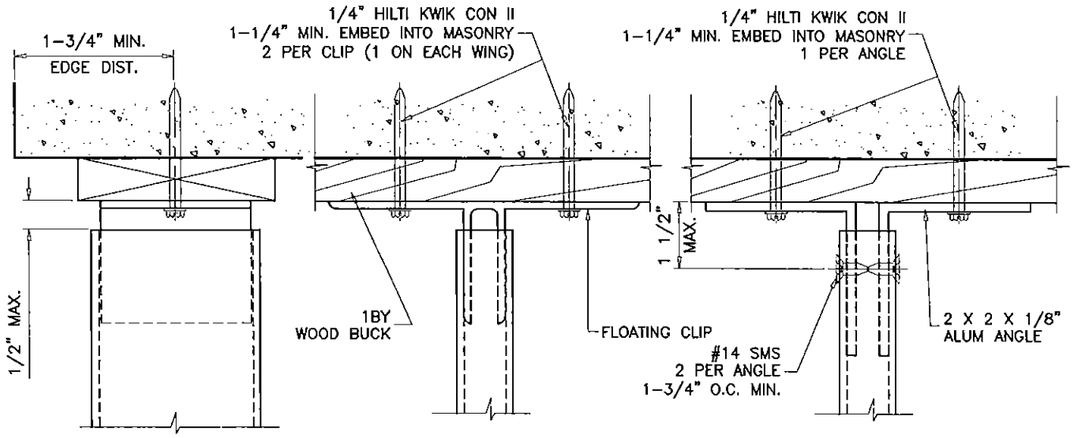

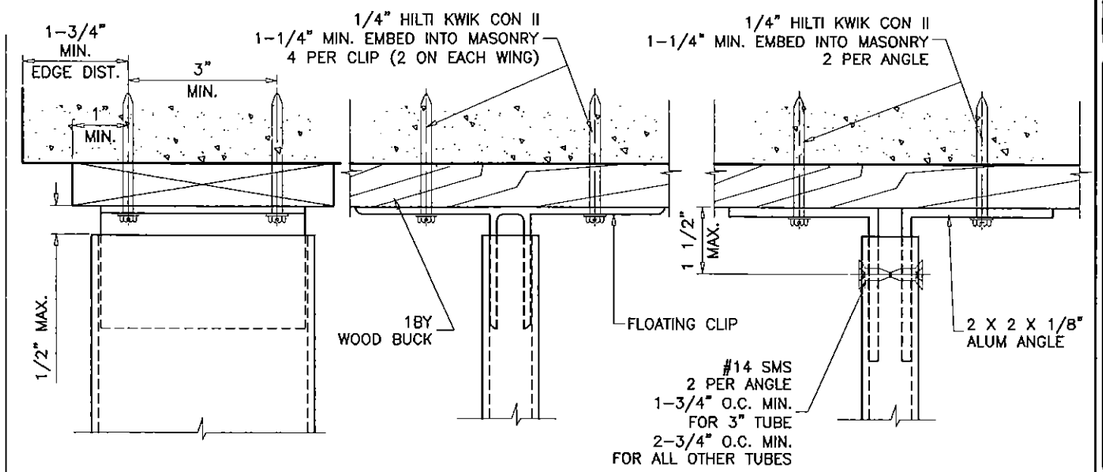

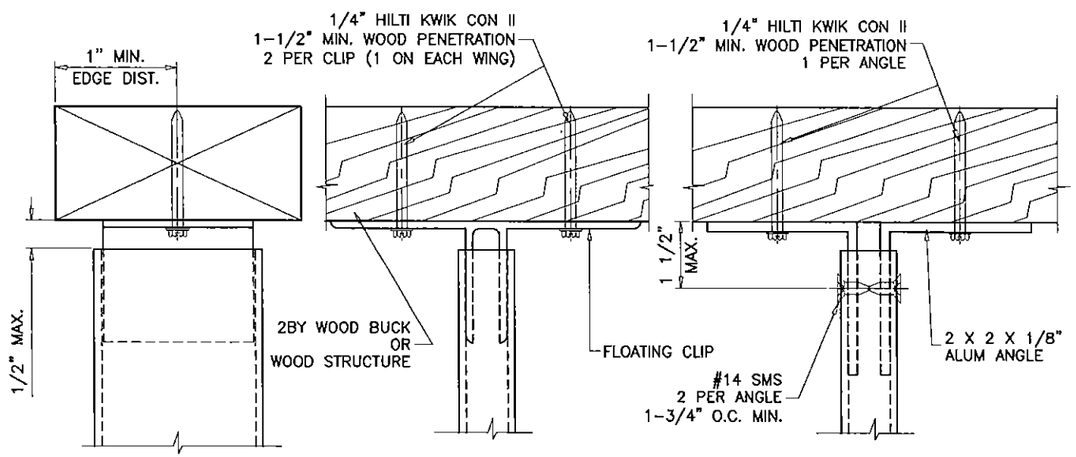

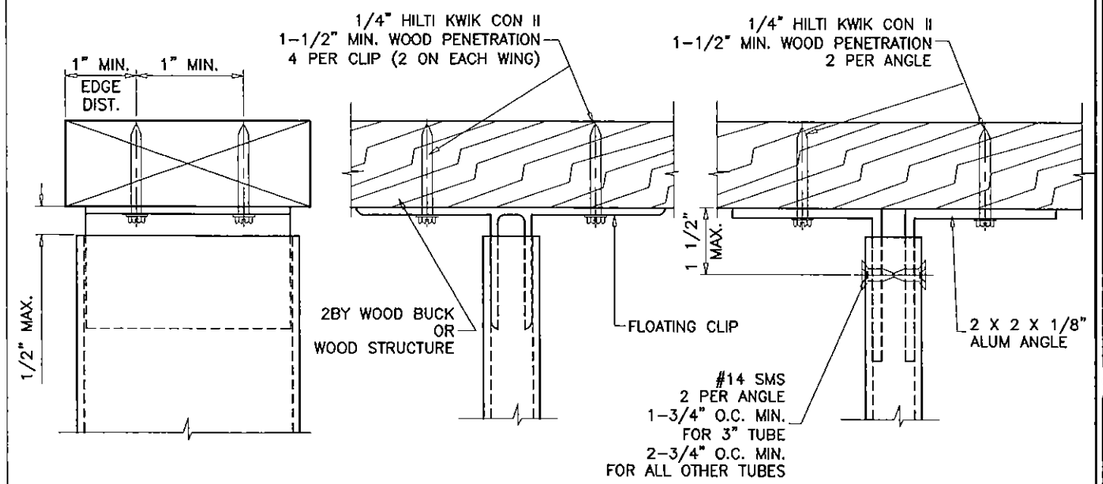

ANCHORS TYPE 'A4'

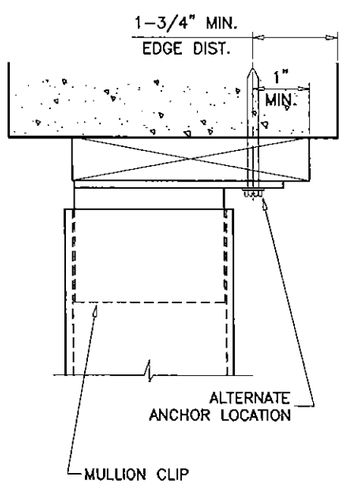

ANCHORS TYPE 'A2'

ALL CLIPS TO FIT SNUG INTO TUBE MULLIONS.
TAPCONS MAY BE HEX OR FLAT HEAD.

Engr: JAVAD AHMAD
CIVIL
FLA. PE # 70592
C.A.N. 3538

APR 20 2015

PRODUCT REVISED
as complying with the Florida
Building Code
Acceptance No 15-0512.23
Expiration Date Aug. 19, 2019
By Manuel Perez
Miami Dade Product Control

AL-FAROOQ CORPORATION
ENGINEERS & PRODUCT DEVELOPMENT
1235 S.W. 87 AVE
MIAMI, FLORIDA 33174
TEL. (305) 264-8100 FAX. (305) 262-6978

MULLION\M04-05RC

ALUMINUM TUBE MULLIONS

RC HOME SHOWCASE
2970 N.W. 75TH AVENUE
MIAMI, FL. 33122
TEL. (305) 392-6214 FAX. (786) 464-1582

revisions:

no	date	by	description
C	09.22.08		UPDATED FOR 2007 FBC
D	03.21.12		NO CHANGE THIS SHEET
E	10.10.13		MANUF. NAME REV.
F	04.16.15		NO CHANGE THIS SHEET

date: 05-02-04
scale: 3/8" = 1"
dr. by: HAMID
chk. by:

drawing no.
M04-05

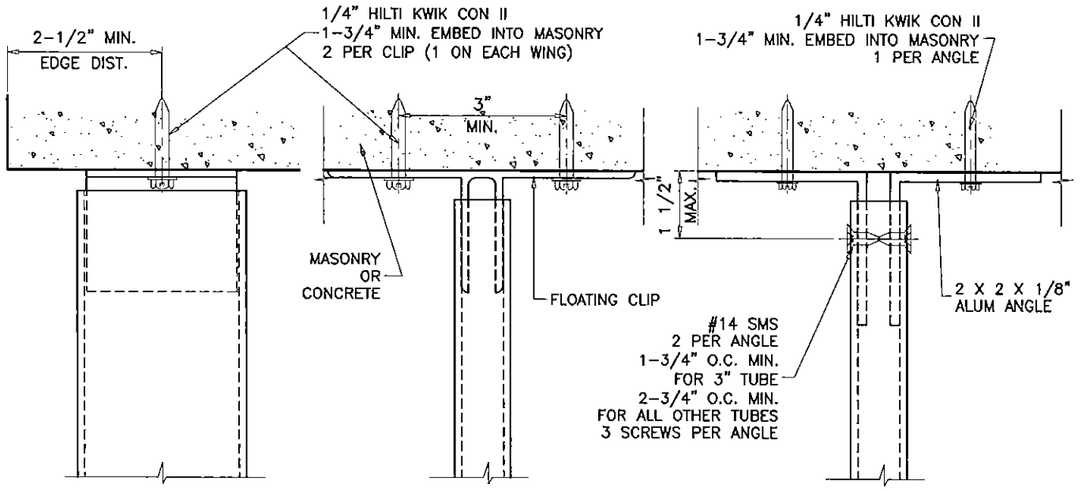

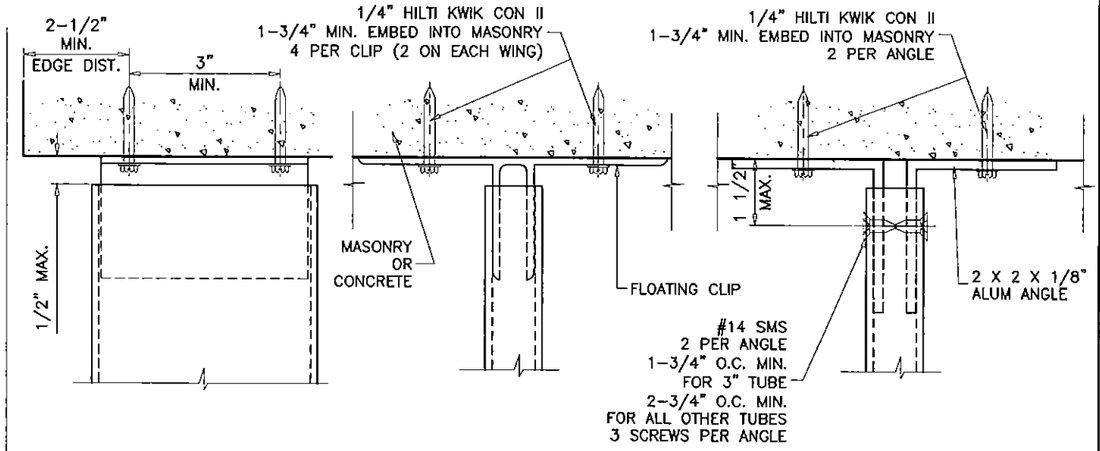

ANCHORS TYPE 'AA4'

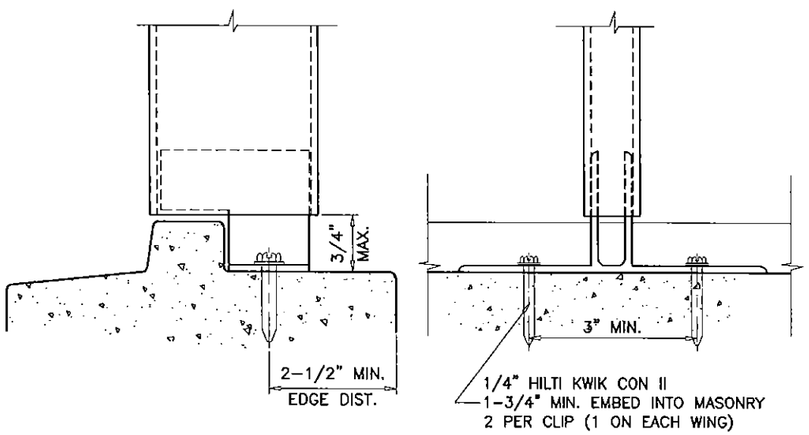

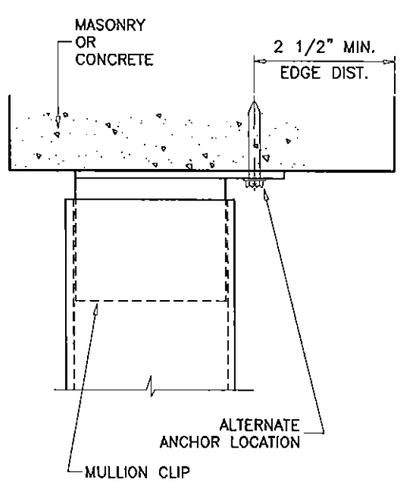

ANCHORS TYPE 'AA2'

ALL CLIPS TO FIT SNUG INTO TUBE MULLIONS.
TAPCONS MAY BE HEX OR FLAT HEAD.

CLIPS OR ANGLES CONNECTED DIRECTLY TO MASONRY TO BE PROTECTED WITH ALKALI-RESISTANT COATINGS, SUCH AS BITUMINOUS PAINT OR WATER-WHITE METHACRYLATE LACQUER.

Engr: JAVAD AHMAD
CIVIL
FLA. PE # 70592
C.A.N. 3538

APR 20 2015

PRODUCT REVISED
as complying with the Florida
Building Code 15-0512.23
Acceptance No
Expiration Date Aug. 19, 2019
By
Miami-Dade Product Control

AL-FAROOQ CORPORATION
ENGINEERS & PRODUCT DEVELOPMENT
1235 S.W. 87 AVE
MIAMI, FLORIDA 33174
TEL. (305) 264-8100 FAX. (305) 262-6978

MULLION\M04-05RC

ALUMINUM TUBE MULLIONS

RC HOME SHOWCASE
2970 N.W. 75TH AVENUE
MIAMI, FL. 33122
TEL. (305) 392-6214 FAX. (786) 464-1582

revisions:

no	date	by	description
C	09.22.08		UPDATED FOR 2007 FBC
D	03.21.12		NO CHANGE THIS SHEET
E	10.10.13		MANUF. NAME REV.
F	04.16.15		NO CHANGE THIS SHEET

date: 05-02-04
scale: 3/8" = 1"
dr. by: HAMID
chk. by:

drawing no.
M04-05

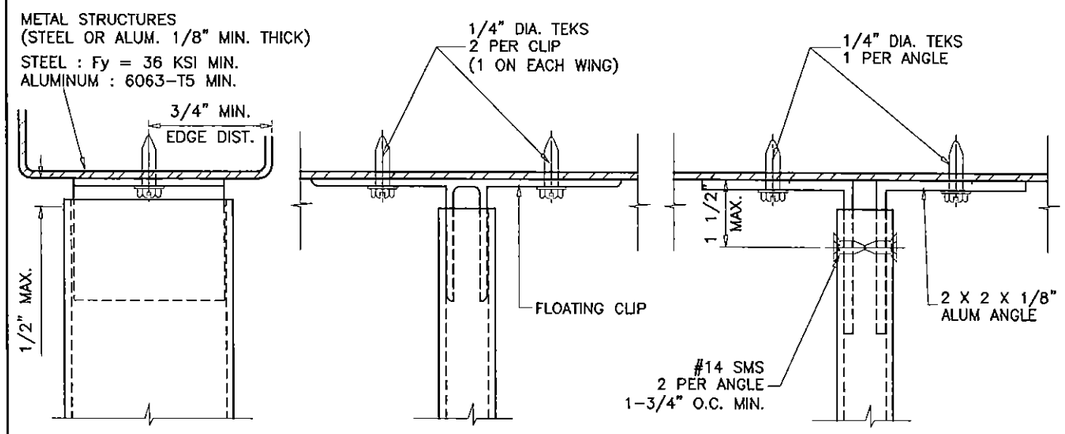

ANCHORS TYPE 'B2'

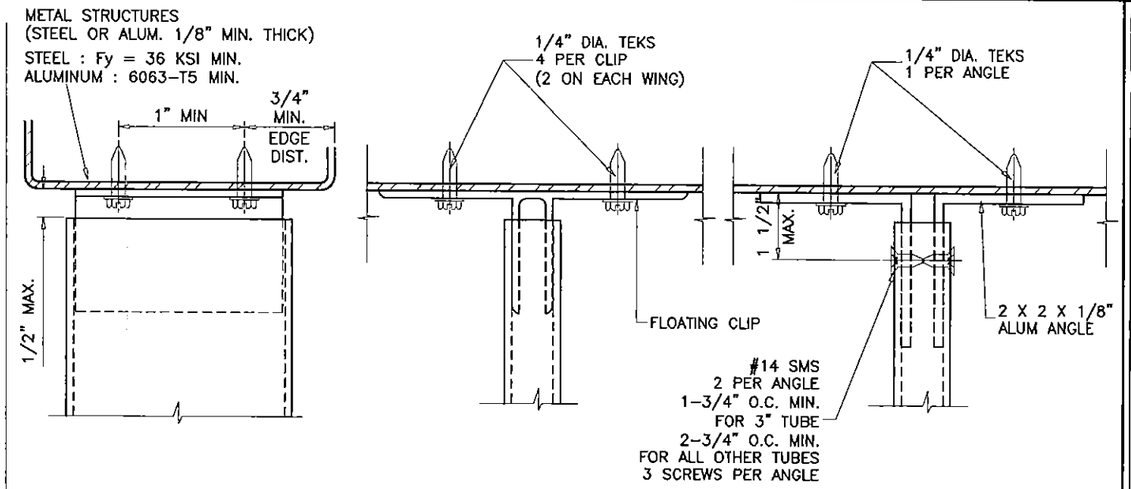

ANCHORS TYPE 'B4'

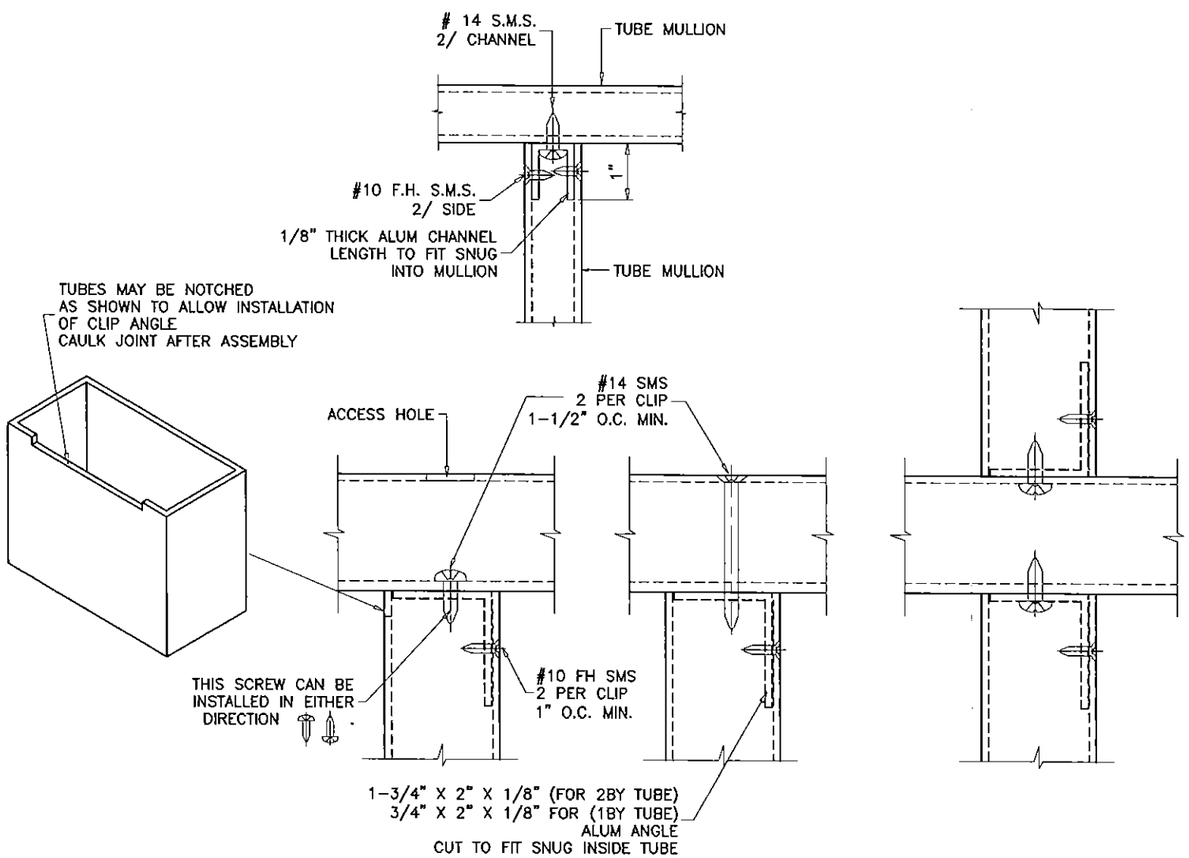

ANCHOR DETAIL #1

METAL TO METAL CONNECTION

USE CHARTS FOR ANCHOR TYPE 'B4' TO VERIFY CAPACITY OF CONNECTION

SEE SHEET 4 OF 7 FOR ANCHOR CHARTS

Engr: JAVAD AHMAD
CML
FLA. PE # 70592
C.A.N. 3538

APR 20 2015

PRODUCT REVISED
as complying with the Florida
Building Code
Acceptance No 15-0512.23
Expiration Date Aug. 19, 2019
By Manuel Perez
Miami Dade Product Control

AL-FAROOQ CORPORATION
ENGINEERS & PRODUCT DEVELOPMENT
1235 S.W. 87 AVE
MIAMI, FLORIDA 33174
TEL. (305) 264-8100 FAX. (305) 262-6978

MULLION\M04-05RC

ALUMINUM TUBE MULLIONS

RC HOME SHOWCASE
2970 N.W. 75TH AVENUE
MIAMI, FL. 33122
TEL. (305) 392-6214 FAX. (786) 464-1582

revisions:

no	date	by	description
C	09.22.08		NO CHANGE THIS SHEET
D	03.21.12		NO CHANGE THIS SHEET
E	10.10.13		MANUF. NAME REV.
F	04.16.15		UPDATED TO 2014 FBC

date: 05-02-04
scale: 3/8" = 1"
dr. by: HAMID
chk. by:

drawing no.
M04-05