MIAMI-DADE COUNTY
DEPARTMENT OF REGULATORY AND ECONOMIC RESOURCES (RER)
BOARD AND CODE ADMINISTRATION DIVISION

MIAMI-DADE COUNTY
PRODUCT CONTROL SECTION
11805 SW 26 Street, Room 208
T (786) 315-2590 F (786) 315-2599
www.miamidade.gov/economy

NOTICE OF ACCEPTANCE (NOA)

RC Home Showcase, Inc.
2970 NW 75th Avenue
Miami, FL 33122

SCOPE:

This NOA is being issued under the applicable rules and regulations governing the use of construction materials. The documentation submitted has been reviewed and accepted by Miami-Dade County RER-Product Control Section to be used in Miami-Dade County and other areas where allowed by the Authority Having Jurisdiction (AHJ).

This NOA shall not be valid after the expiration date stated below. The Miami-Dade County Product Control Section (In Miami-Dade County) and/ or the AHJ (in areas other than Miami-Dade County) reserve the right to have this product or material tested for quality assurance purposes. If this product or material fails to perform in the accepted manner, the manufacturer will incur the expense of such testing and the AHJ may immediately revoke, modify, or suspend the use of such product or material within their jurisdiction. RER reserves the right to revoke this acceptance, if it is determined by Miami-Dade County Product Control Section that this product or material fails to meet the requirements of the applicable building code.

This product is approved as described herein, and has been designed to comply with the Florida Building Code, including the High Velocity Hurricane Zone.

DESCRIPTION: Series "FX370" Aluminum Window Wall System - L.M.I.

APPROVAL DOCUMENT: Drawing No. **14 406**, titled "Series FX370 (L.M.I.)", sheets 1 through 7 of 7, dated 11/04/15, prepared by Eastern Engineering Group, signed and sealed by Gonzalo A. Paz, P.E., bearing the Miami-Dade County Product Control Approval stamp with the Notice of Acceptance number and approval date by the Miami-Dade County Product Control Section.

MISSILE IMPACT RATING: Large and Small Missile Impact Resistant

LABELING: Each unit shall bear a permanent label with the manufacturer's name or logo, city, state, series, and following statement: "Miami-Dade County Product Control Approved", unless otherwise noted herein.

RENEWAL of this NOA shall be considered after a renewal application has been filed and there has been no change in the applicable building code negatively affecting the performance of this product.

TERMINATION of this NOA will occur after the expiration date or if there has been a revision or change in the materials, use, and/ or manufacture of the product or process. Misuse of this NOA as an endorsement of any product, for sales, advertising or any other purposes shall automatically terminate this NOA. Failure to comply with any section of this NOA shall be cause for termination and removal of NOA.

ADVERTISEMENT: The NOA number preceded by the words Miami-Dade County, Florida, and followed by the expiration date may be displayed in advertising literature. If any portion of the NOA is displayed, then it shall be done in its entirety.

INSPECTION: A copy of this entire NOA shall be provided to the user by the manufacturer or its distributors and shall be available for inspection at the job site at the request of the Building Official.

This NOA consists of this page 1 and evidence pages E-1 and E-2, as well as approval document mentioned above.

The submitted documentation was reviewed by **Manuel Perez, P.E.**

MIAMI-DADE COUNTY APPROVED

MP 12/04/15

RC Home Showcase, Inc.

NOTICE OF ACCEPTANCE: EVIDENCE SUBMITTED

A. DRAWINGS

1. Manufacturer's die drawings and sections.
2. Drawing No. **14 406**, titled "Series FX370 (L.M.I.)", sheets 1 through 7 of 7, dated 11/04/15, prepared by Eastern Engineering Group, signed and sealed by Gonzalo A. Paz, P.E.

B. TESTS

1. Test reports on: 1) Air Infiltration Test, per FBC, TAS 202-94
   2) Uniform Static Air Pressure Test, Loading per FBC, TAS 202-94
   3) Water Resistance Test, per FBC, TAS 202-94

   along with marked-up drawings and installation diagram of an aluminum window wall system, prepared by Hurricane Engineering & Testing, Inc., Test Report No. **HETI-15-5035**, dated 04/20/15, signed and sealed by Rafael E. Droz-Seda, P.E.
2. Test reports on: 1) Large Missile Impact Test per FBC, TAS 201-94
   2) Cyclic Wind Pressure Loading per FBC, TAS 203-94

   along with marked-up drawings and installation diagram of an aluminum window wall system, prepared by Hurricane Engineering & Testing, Inc., Test Reports No. **HETI-15-5036** and **HETI-15-5038**, both dated 04/20/15, signed and sealed by Rafael E. Droz-Seda, P.E.
3. Test reports on: 1) Drop Load Test (400 Ft. Lb.), per ANSI Z97.1-09 Category A
   CPSC 16 CFR, Part 1201.4 Category II and per FBC, Ch. 2406

   along with marked-up drawings and installation diagram of aluminum window wall system, prepared by Hurricane Engineering & Testing, Inc., Test Reports No.'s **HETI-15-5036A** and **HETI-15-5038A**, both dated 04/20/15, signed and sealed by Rafael E. Droz-Seda, P.E.

C. CALCULATIONS

1. Anchor verification calculations and structural analysis, complying with **FBC 5th Edition (2014)**, dated 08/18/15 and revised on 11/04/15, prepared by Eastern Engineering Group, signed and sealed by Gonzalo A. Paz, P.E.
2. Glazing complies with **ASTM E1300-09**

D. QUALITY ASSURANCE

1. Miami-Dade Department of Regulatory and Economic Resources (RER).

Manuel Perez

Manuel Perez, P.E.
Product Control Examiner
NOA No. 15-0515.02
Expiration Date: December 10, 2020
Approval Date: December 10, 2015

NOTICE OF ACCEPTANCE: EVIDENCE SUBMITTED

E. MATERIAL CERTIFICATIONS

1. Notice of Acceptance No. **14-0916.11** issued to **Kuraray America, Inc.** for their **"SentryGlas® (Clear and White) Glass Interlayers"** dated 06/25/15, expiring on 07/04/18.

F. STATEMENTS

1. Statement letters of conformance, complying with **FBC 5th Edition (2014)**, and of no financial interest, dated 07/17/15, issued by Eastern Engineering Group, signed and sealed by Gonzalo A. Paz, P.E.
2. Laboratory compliance letters for Test Reports No. **HETI-15-5035**, **HETI-15-5036**, **HETI-15-5036A**, **HETI-15-5038** and **HETI-15-5038A**, all issued by Hurricane Engineering & Testing, Inc., all signed and sealed by Rafael E. Droz-Seda, P.E.
3. Proposal issued by the Product Control Section, dated 11/13/14, signed by Jaime D. Gascon, P.E.

G. OTHERS

1. None.

Manuel Perez

Manuel Perez, P.E.
Product Control Examiner
NOA No. 15-0515.02
Expiration Date: December 10, 2020
Approval Date: December 10, 2015

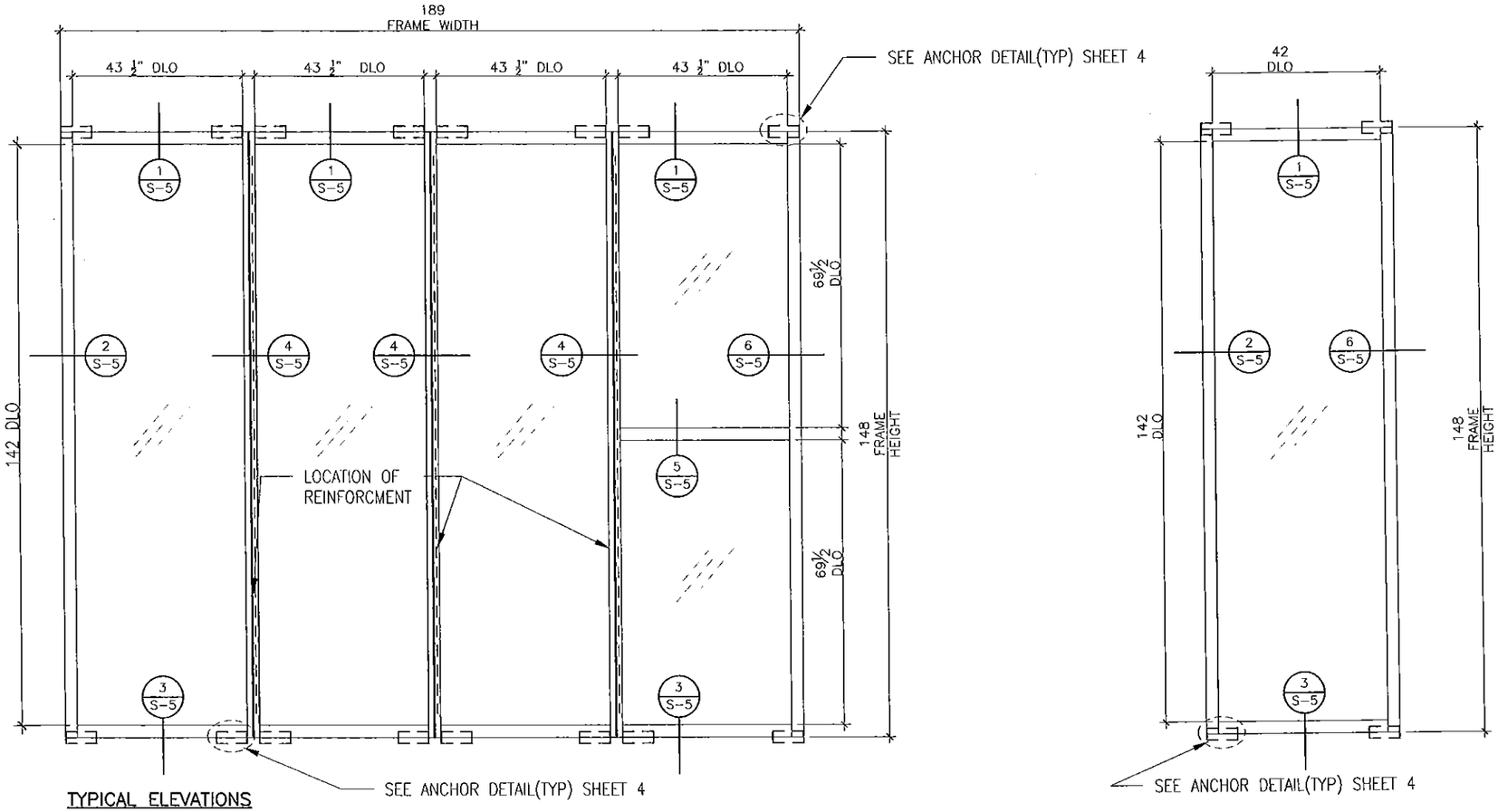

TYPICAL ELEVATIONS

GENERAL NOTES

1. THIS WINDOWS SYSTEM IS DESIGNED AND TESTED TO COMPLY W/ THE REQUIREMENTS OF THE FLORIDA BUILDING CODE INCLUDING HIGH VELOCITY HURRICANE ZONE VELOCITY (HVHZ) AND ASTM 1300-09 THESE WINDOWS ARE RATE FOR LARGE MISSILE IMPACT. (SHUTTERS ARE NOT REQUIRED)
2. ANCHORS SHOWN IN DRAWINGS ARE AS PER TEST UNITS. ANCHORS ON ALL PANEL SIZES ARE NOT TO EXCEED THESE MAXIMUM SPACING ON CENTER (O.C.) AND AS TABULATED ON SHEET 4
3. ANCHOR CONDITIONS NOT DESCRIBED IN THESE DRAWING'S ARE TO BE ENGINEERED ON A SITE SPECIFIC BASIS, UNDER A SEPARATE APPROVAL AND TO BE REVIEWED BY BUILDING OFFICIAL.
4. ANCHORS EMBEDMENT TO BASE MATERIAL SHALL BE BEYOND WALL DRESSING OR STUCCO.
5. ALL METAL/STEEL IN CONTACT WITH ALUMINUM OR OTHER DISSIMILAR MATERIALS TO BE PAINTED OR PLATED AND SHALL MEET THE FLORIDA BLDG. CODE & ADOPTED STANDARDS.
6. USE RATING GREATER THAN DESIGN LOADS REQUIRED
7. LOWER DESIGN PRESSURES FROM MULLION AND GLASS WILL APPLY TO ENTIRE SYSTEM.
8. EXISTING STRUCTURE TO SUPPORT THE LOADS IMPOSED BY THE WINDOW OR WINDOW WALL SYSTEM. ENGINEER ON RECORD OF THE BUILDING SHALL VERIFY THE STRUCTURE FOR SUCH LOADINGS.
9. SYSTEM COMPLIES WITH REQUIREMENTS OF ANSI Z-97.1-04/09

DESIGN SEQUENCE

STEP 1: DETERMINE DESIGN WIND LOAD REQUIREMENT BASED ON WIND VELOCITY,BLDG. HEIGHT, WIND ZONE USING APPLICABLE ASCE 7 STANDARD.

STEP 2: SEE SHEET 2 FOR GLASS DESIGN LOAD. CAPACITY SHOULD EXCEED THE DESIGN LOAD.

STEP 3: CHECK MULLION CAPACITY FOR A GIVEN SPACING AND HEIGHT USING SHEET 3. THE CAPACITY SHOULD EXCEED THE DESIGN LOAD.

STEP 4: THE LOWEST VALUE RESULTING FROM STEPS 2 AND 3 SHALL APPLY TO ENTIRE SYSTEM.

Approved as complying with the Florida Building Code
Date 12/10/2015
NOA# 15-0515.02
Miami Dade Product Control
By Manuel Perez

GONZALO A. PAZ
LICENSE No 60734
STATE OF FLORIDA
PROFESSIONAL ENGINEER
NOV 04 2015

EASTERN ENGINEERING GROUP
3401 NW 82 AVE SUITE 370 Miami, Florida 33122
Tel. (305) 599-8133 Fax. (305) 599-8076
www.easterneg.com
☐ RAISSA R. LOPEZ, PE (Lic No-59399)
☐ GONZALO A. PAZ, PE (Lic No-60734)
CERT. OF AUTHORIZATION No. 26655

REVISIONS

No.	DATE	DESCRIPTION

JOB No. 14 406
DESIGNED & DRAWN:
SCALE : AS SHOWN

Product: SERIES FX370 (L.M.I.)

RC HOME SHOWCASE
ALUMINUM WINDOWS AND DOORS
16115 NW 52nd Ave.
Miami Gardens, FL 33014
Phone: (305) 392 - 6214
Fax: (305) 260 - 6432

11/4/2015

SHEET: 1 OF 7

Glass Design Load Capacity(PSF)			
D.L.O Witdh	D.L.O Height	Design Load Capacity (psf)	
(in)	(in)	(+)	(-)
30.0	60.0	125.0	125.0
	66.0	125.0	125.0
	72.0	125.0	125.0
	78.0	125.0	125.0
	84.0	125.0	125.0
	90.0	125.0	125.0
	96.0	125.0	125.0
	102.0	125.0	125.0
	108.0	125.0	125.0
	114.0	125.0	125.0
	120.0	125.0	125.0
	126.0	125.0	125.0
	132.0	125.0	125.0
	138.0	125.0	125.0
	142.0	125.0	125.0
36.0	60.0	125.0	125.0
	66.0	125.0	125.0
	72.0	125.0	125.0
	78.0	125.0	125.0
	84.0	125.0	125.0
	90.0	125.0	125.0
	96.0	125.0	125.0
	102.0	125.0	125.0
	108.0	125.0	125.0
	114.0	125.0	125.0
	120.0	125.0	125.0
	126.0	125.0	125.0
	132.0	125.0	125.0
	138.0	125.0	125.0
	142.0	125.0	125.0

Glass Design Load Capacity(PSF)			
D.L.O Witdh	D.L.O Height	Design Load Capacity (psf)	
(in)	(in)	(+)	(-)
43 1/2"	60.0	125.0	125.0
	66.0	125.0	125.0
	72.0	125.0	125.0
	78.0	125.0	125.0
	84.0	125.0	125.0
	90.0	125.0	125.0
	96.0	125.0	125.0
	102.0	125.0	125.0
	108.0	125.0	125.0
	114.0	125.0	125.0
	120.0	125.0	125.0
	126.0	125.0	125.0
	132.0	125.0	125.0
	138.0	125.0	125.0
	142.0	125.0	125.0
48.0	60.0	125.0	125.0
	66.0	125.0	125.0
	72.0	125.0	125.0
	78.0	125.0	125.0
	84.0	125.0	125.0
	90.0	125.0	125.0
	96.0	125.0	125.0
	102.0	125.0	125.0
	108.0	125.0	125.0
	114.0	125.0	125.0
	120.0	125.0	125.0
	126.0	125.0	125.0
	132.0	125.0	125.0
	138.0	125.0	125.0
	142.0	125.0	125.0

Glass Design Load Capacity(PSF)			
D.L.O Witdh	D.L.O Height	Design Load Capacity (psf)	
(in)	(in)	(+)	(-)
54.0	60.0	125.0	125.0
	66.0	125.0	125.0
	72.0	125.0	125.0
	78.0	125.0	125.0
	84.0	125.0	125.0
	90.0	125.0	125.0
	96.0	125.0	125.0
	102.0	125.0	125.0
	108.0	125.0	125.0
	114.0	125.0	125.0
	120.0	125.0	125.0
	126.0	125.0	125.0
	132.0	125.0	125.0
57.0	60.0	125.0	125.0
	66.0	125.0	125.0
	72.0	125.0	125.0
	78.0	125.0	125.0
	84.0	125.0	125.0
	90.0	125.0	125.0
	96.0	125.0	125.0
	102.0	125.0	125.0
	108.0	125.0	125.0
	114.0	125.0	125.0
	120.0	125.0	125.0
	126.0	124.0	124.0
	132.0	120.0	120.0

Glass Design Load Capacity(PSF)			
D.L.O Witdh	D.L.O Height	Design Load Capacity (psf)	
(in)	(in)	(+)	(-)
63.0	60.0	125.0	125.0
	66.0	125.0	125.0
	72.0	125.0	125.0
	78.0	125.0	125.0
	84.0	125.0	125.0
	90.0	125.0	125.0
	96.0	125.0	125.0
	102.0	125.0	125.0
	108.0	125.0	125.0
	114.0	125.0	125.0
69.0	60.0	125.0	125.0
	66.0	125.0	125.0
	72.0	125.0	125.0
	78.0	125.0	125.0
	84.0	125.0	125.0
	90.0	125.0	125.0
	96.0	125.0	125.0
	102.0	124.0	124.0
	108.0	119.0	119.0
	114.0	114.0	114.0

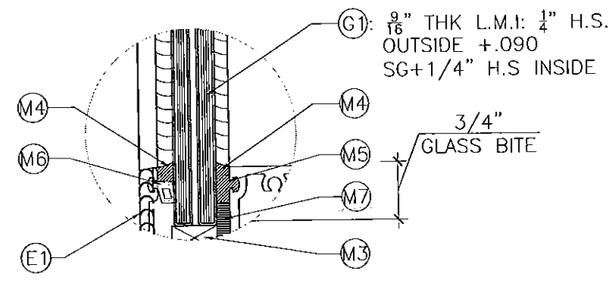

GLASS TYPE "G1" DETAIL

SCALE: 6"=1'-0"

NOTE
-GLASS CAPACITIES ON THIS SHEET ARE BASED ASTM E1300-09 (3 SEC. GUSTS)

INTERLAYER NOTE
0.09" INTERLAYER SENTRYGLASS BY KURARAY AMERICA, INC.

Approved as complying with the Florida Building Code
Date 12/10/2015
NOA# 15-0515.02
Miami Dade Product Control
By Manuel Perez

GONZALO A. PAZ
LICENSE
No 60734
STATE OF FLORIDA
PROFESSIONAL ENGINEER

EASTERN ENGINEERING GROUP
3401 NW 82 AVE SUITE 370 Miami, Florida 33122
Tel. (305) 599-8133 Fax. (305) 599-8076
www.easteneg.com
☐ RAISSA R. LOPEZ, PE (Lic No-59399)
☐ GONZALO A. PAZ, PE (Lic No-60734)
CERT. OF AUTHORIZATION No. 26655

REVISIONS

No.	DATE	DESCRIPTION

JOB No. 14 406
DESIGNED & DRAWN:
SCALE : AS SHOWN

Product: SERIES FX370 (L.M.I.)

ARC HOME SHOWCASE
ALUMINUM WINDOWS AND DOORS
16115 NW 52nd Ave.
Miami Gardens, FL 33014
Phone: (305) 392 - 6214
Fax: (305) 280 - 6432

11/4/2015

SHEET: 2 OF 7

Mullion/Jamb Load Capacity			
Panel Width (in)	Panel Height (in)	System Capacity (psf) (+)	(-)
30	66	125.0	125.0
36		125.0	125.0
42		125.0	125.0
48		115.5	115.5
54		64.1	64.1
60		37.9	37.9
66		23.5	23.5
72		18.3	18.3
30	72	125.0	125.0
36		125.0	125.0
42		125.0	125.0
48		115.5	115.5
54		64.1	64.1
60		37.9	37.9
66		23.5	23.5
72		15.2	15.2
30	78	125.0	125.0
36		125.0	125.0
42		125.0	125.0
48		115.5	115.5
54		64.1	64.1
60		37.9	37.9
66		23.5	23.5
72		15.2	15.2
30	84	125.0	125.0
36		125.0	125.0
42		125.0	125.0
48		115.5	115.5
54		64.1	64.1
60		37.9	37.9
66		23.5	23.5
72		15.2	15.2

Mullion/Jamb Load Capacity			
Panel Width (in)	Panel Height (in)	System Capacity (psf) (+)	(-)
30	90	125.0	125.0
36		125.0	125.0
42		125.0	125.0
48		115.5	115.5
54		64.1	64.1
60		37.9	37.9
66		23.5	23.5
72		15.2	15.2
30	96	125.0	125.0
36		125.0	125.0
42		125.0	125.0
48		115.5	115.5
54		64.1	64.1
60		37.9	37.9
66		23.5	23.5
72		15.2	15.2
30	102	125.0	125.0
36		125.0	125.0
42		125.0	125.0
48		115.5	115.5
54		64.1	64.1
60		37.9	37.9
66		23.5	23.5
30	108	125.0	125.0
36		125.0	125.0
42		125.0	125.0
48		115.5	115.5
54		64.1	64.1
60		37.9	37.9
30	114	125.0	125.0
36		125.0	125.0
42		125.0	125.0
48		115.5	115.5
54		64.1	64.1
60		37.9	37.9

Mullion/Jamb Load Capacity			
Panel Width (in)	Panel Height (in)	System Capacity (psf) (+)	(-)
30	120	125.0	125.0
36		125.0	125.0
42		125.0	125.0
48		115.5	115.5
54		64.1	64.1
30	126	125.0	125.0
36		125.0	125.0
42		125.0	125.0
48		115.5	115.5
54		64.1	64.1
30	132	125.0	125.0
36		125.0	125.0
42		125.0	125.0
48		115.5	115.5
54		64.1	64.1
30	138	125.0	125.0
36		125.0	125.0
42		125.0	125.0
48		115.5	115.5
30	144	125.0	125.0
36		125.0	125.0
42		125.0	125.0
48		115.5	115.5
30	148	125.0	125.0
36		125.0	125.0
42		125.0	125.0
47.25		125.0	125.0

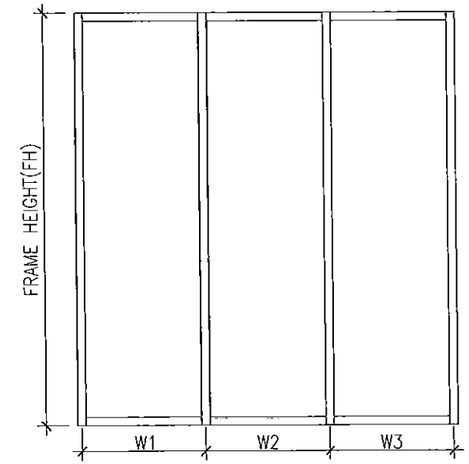

WIDTH(W)=W1
AT FRAME JAMB

WIDTH(W)= $\frac{W2+W3}{2}$
AT FRAME MULLION

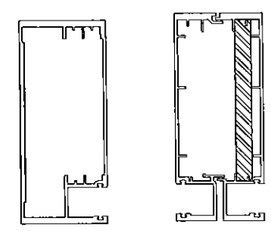

Approved as complying with the
Florida Building Code
Date 12/10/2015
NOA# 15-0515.02
Miami Dade Product Control
By

GONZALO A. PAZ
LICENSE
No 60734
STATE OF
FLORIDA
PROFESSIONAL ENGINEER

/2015

EASTERN ENGINEERING GROUP
3401 NW 82 AVE SUITE 370 Miami, Florida 33122
Tel. (305) 599-8133 Fax. (305) 599-8076
www.easterneg.com
☐ RAISSA R. LOPEZ, PE (Lic No-59399)
☐ GONZALO A. PAZ, PE (Lic No-60734)
CERT. OF AUTHORIZATION No. 26655

REVISIONS

No.	DATE	DESCRIPTION

JOB No. 14 406
DESIGNED & DRAWN:
SCALE : AS SHOWN

SERIES FX370 (L.M.I.)

16115 NW 52nd Ave.
Miami Gardens, FL 33014
Phone: (305) 392 - 6214
Fax: (305) 260 - 6432

ARC HOME SHOWCASE
ALUMINUM WINDOWS AND DOORS

SHEET: 3 OF 7

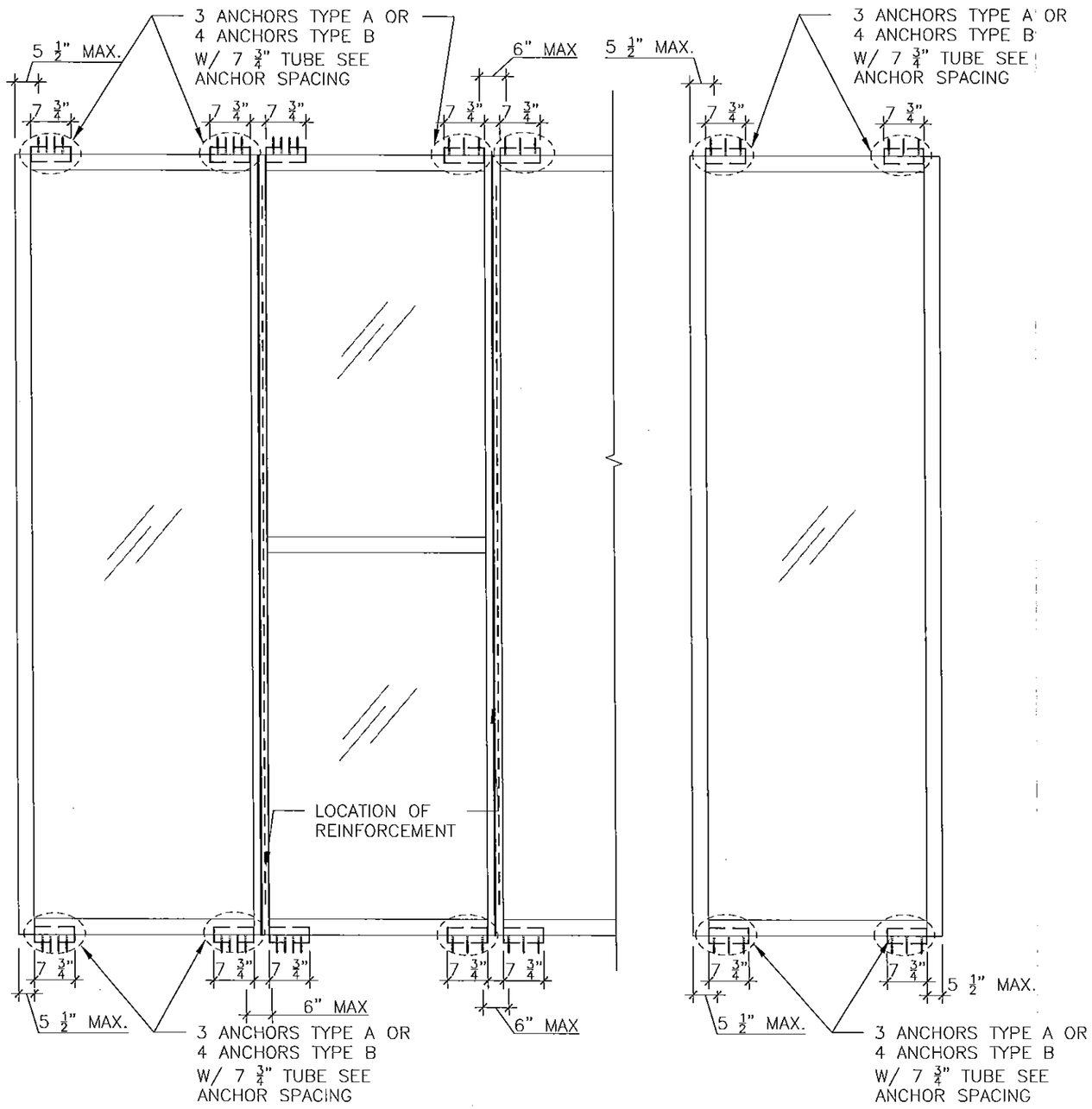

ANCHOR TYPE "B" DETAIL

SCALE: 3"=1'-0"

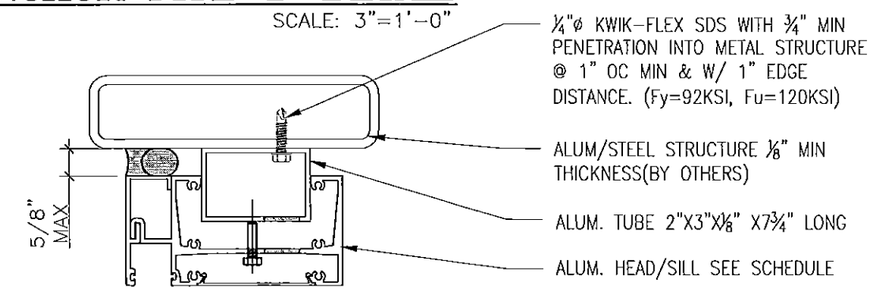

ANCHOR TYPE "A" DETAIL

SCALE: 3"=1'-0"

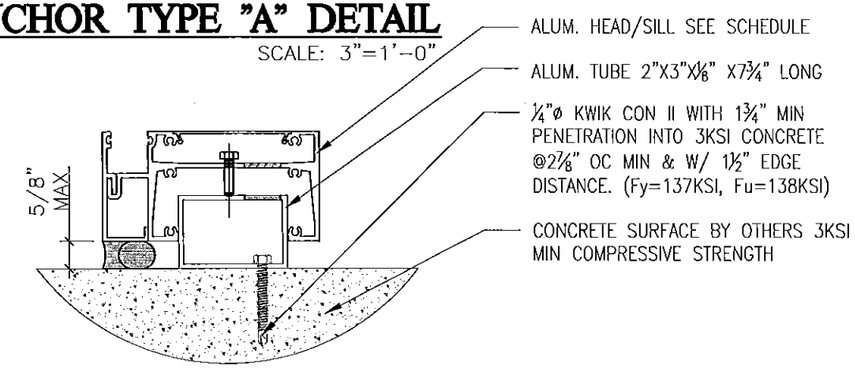

ANCHOR SPACING

SCALE: 3"=1'-0"

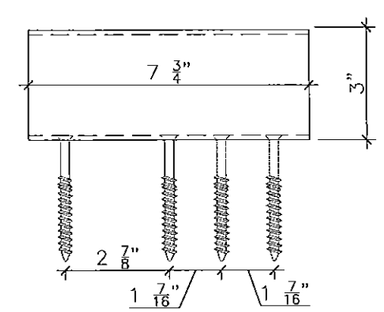

TYPE B

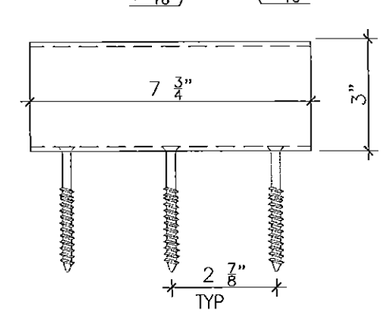

TYPE A

ANCHOR TYPE	ANCHOR CAPACITY RECAP
A	¼"ø KWIK CON II WITH 1¾" MIN PENETRATION INTO 3KSI CONCRETE @2⅞" OC MIN & W/ 1½" EDGE DISTANCE. (Fy=137KSI, Fu=138KSI). S4 @BILL OF MATERIALS
B	¼"ø KWIK-FLEX SDS WITH ¾" MIN PENETRATION INTO METAL STRUCTURE @ 1" OC MIN & W/ 1" EDGE DISTANCE. (Fy=92KSI, Fu=120KSI) S3 @BILL OF MATERIALS

Approved as complying with the Florida Building Code
Date 12/18/2015
NOA# 15-0515.02
Miami Dade Product Control
By Manuel Perez

GONZALO A. PAZ
LICENSE
No 60734
STATE OF FLORIDA
PROFESSIONAL ENGINEER
12/18/2015

EASTERN ENGINEERING GROUP
3401 NW 82 AVE SUITE 370 Miami, Florida 33122
Tel. (305) 599-8133 Fax. (305) 599-8076
www.easternegg.com
☐ RAISSA R. LOPEZ, PE (Lic No-59399)
☐ GONZALO A. PAZ, PE (Lic No-60734)
CERT. OF AUTHORIZATION No. 26655

REVISIONS

No.	DATE	DESCRIPTION

JOB No. 14 406
DESIGNED & DRAWN:
SCALE : AS SHOWN

SERIES FX370 (L.M.I.)

16115 NW 52nd Ave.
Miami Gardens, FL 33014
Phone: (305) 392 - 6214
Fax: (305) 260 - 6432

HRC HOME SHOWCASE ALUMINUM WINDOWS AND DOORS

SHEET: 4 OF 7

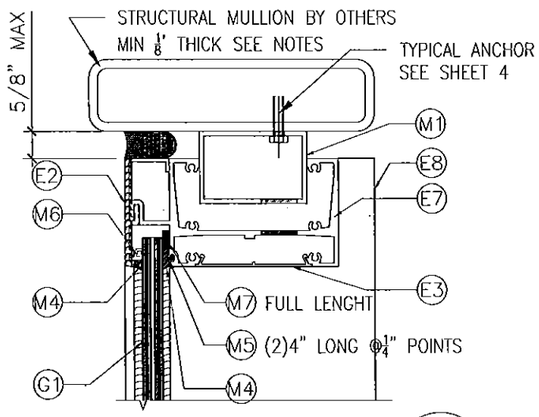

1 S-5 **DETAIL**
SCALE: 3"=1'-0"

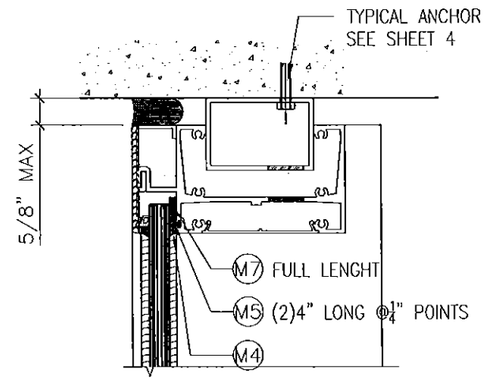

NOTE:
- SEE SHEET 4 FOR ANCHORS SPEC.
- ALL JOINTS AND FRAME CONNECTIONS SEALED WITH DOW CORNING 795 SEALANT
- METAL STRUCT./MULLION BY OTHERS MUST SUSTAIN LOAD IMPOSED BY GLAZING SYSTEM AND TRANSFER THEM TO THE BUILDING STRUCTURE.
- SETTING BLOCK TO BE SARLINK TPV 5775B By TECKNOR APEX CO. W/ HARDNESS 75±5 SHORE A (M3 @ BILL OF MATERIALS)

GAP DIMENSIONS
1/4" MIN FOR UP TO 9'-0" HIGH FRAME
3/8" MIN FOR UP TO 10'-0" HIGH FRAME
3/4" MIN FOR UP TO 13'-0" HIGH FRAME
1" MAX
SILICONE DOW CORNING 795 OR 790 W/ BACKER ROD

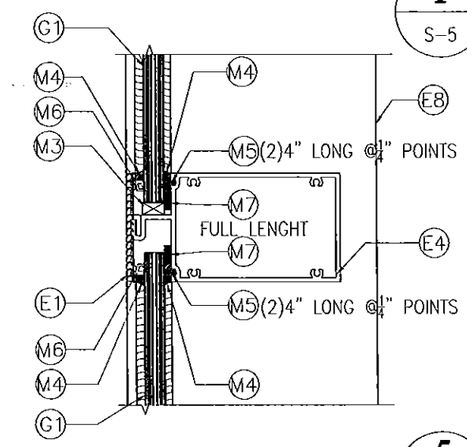

5 S-5 **DETAIL**
SCALE: 3"=1'-0"

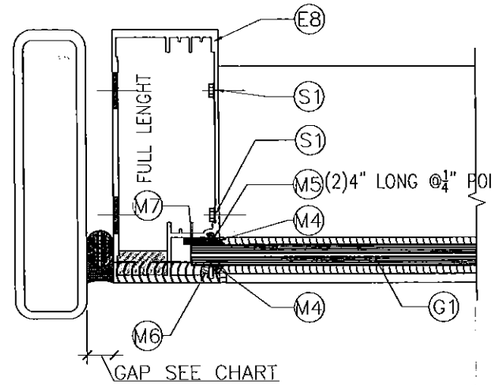

2 S-5 **DETAIL**
SCALE: 3"=1'-0"

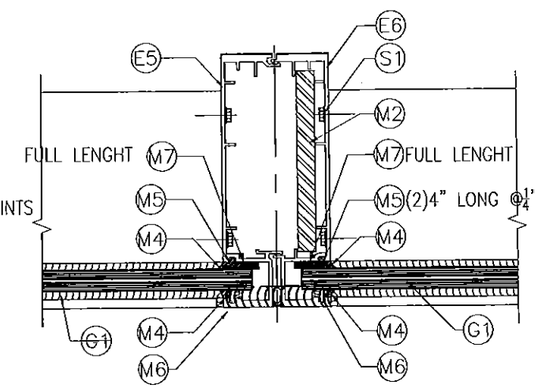

4 S-5 **DETAIL**
SCALE: 3"=1'-0"

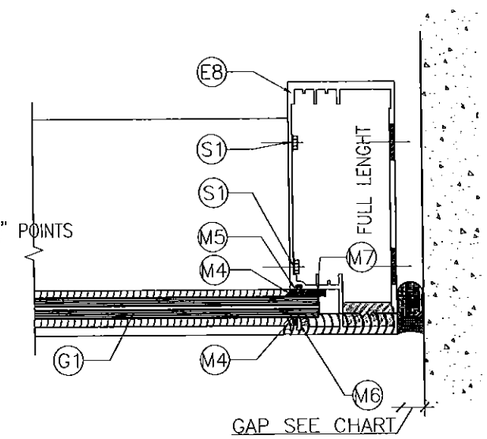

DETAIL 6 S-5
SCALE: 3"=1'-0"

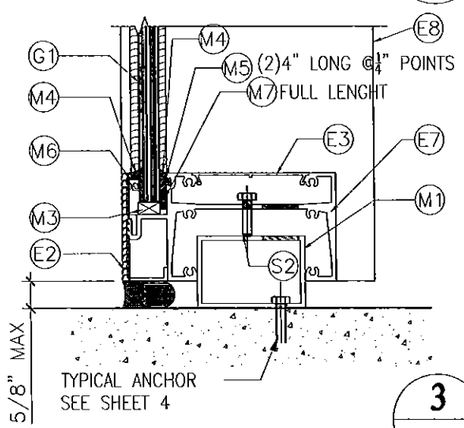

3 S-5 **DETAIL**
SCALE: 3"=1'-0"

Approved as complying with the Florida Building Code
Date 12/16/2015
NOA# 15-0515.02
Miami Dade Product Control
By Manuel Perez

GONZALO A. PAZ
LICENSE
No 6073
STATE OF FLORIDA
PROFESSIONAL ENGINEER

EASTERN ENGINEERING GROUP
3401 NW 82 AVE SUITE 370 Miami, Florida 33122
Tel. (305) 599-8133 Fax. (305) 599-8076
www.easterneg.com
☐ RAISSA R. LOPEZ, PE (Lic No-59399)
☐ GONZALO A. PAZ, PE (Lic No-60734)
CERT. OF AUTHORIZATION No. 26655

REVISIONS

No.	DATE	DESCRIPTION

JOB No. 14 406
DESIGNED & DRAWN:
SCALE : AS SHOWN

Product: SERIES FX370 (L.M.I.)

RC HOME SHOWCASE ALUMINUM WINDOWS AND DOORS
16115 NW 52nd Ave.
Miami Gardens, FL 33014
Phone: (305) 392 - 6214
Fax: (305) 260 - 6432

11/4/2015

SHEET: 5 OF 7

SERIES FX370 EXTRUSIONS

SCALE: 6"=1'-0"

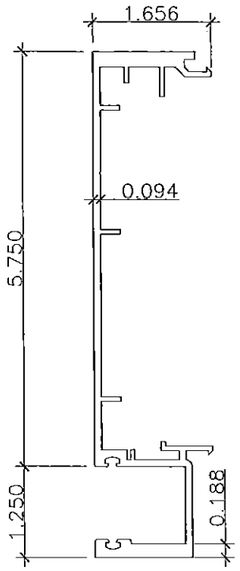

(E5) FX370-042 MALE MULLION

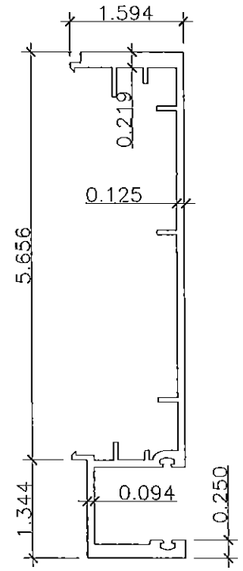

(E6) FX370-043 FEMALE MULLION

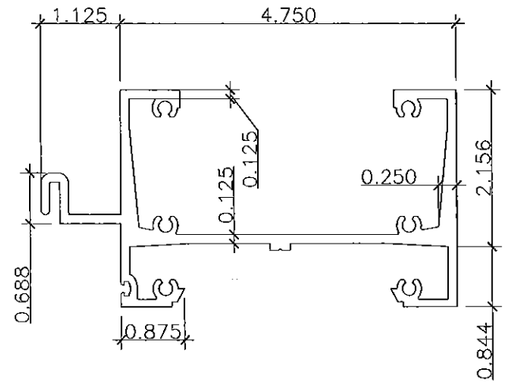

(E7) FX370-051 HEAD & SILL

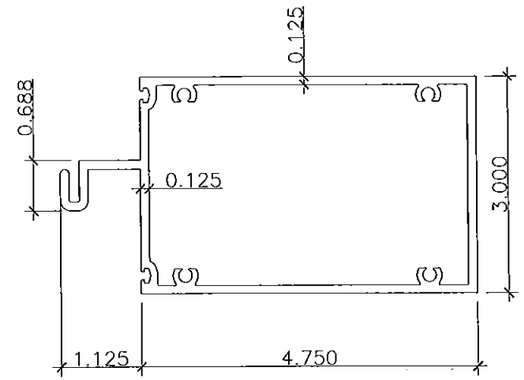

(E4) FX370-041 HORIZ. INTERMEDIATE

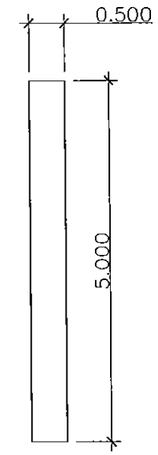

(M2) STEEL REINF. BAR 5"X½" (OPTIONAL)

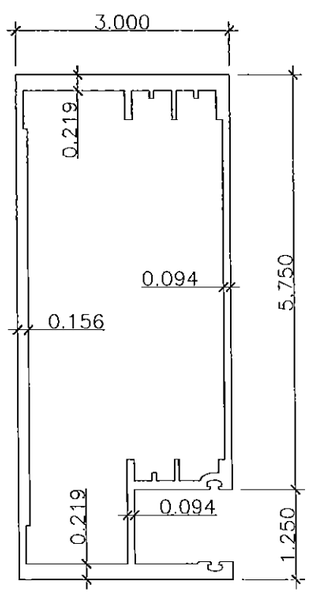

(E8) FX370-066 JAMB

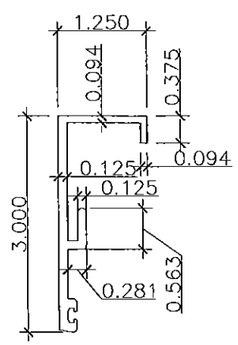

(E3) FX370-011 INT. SNAP COVER

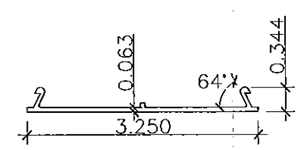

(E2) FX370-006 HEAD/SILL GLAZING COVER

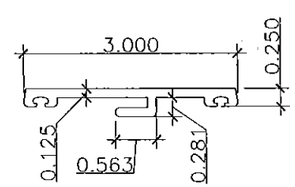

(E2) FX370-005 INTERM. GLAZING COVER

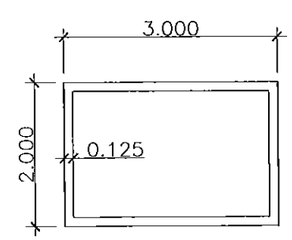

(M1) ALUM. TUBE 3"X2"X⅛"

Approved as complying with the Florida Building Code
Date 12/10/2015
NOA# 15-0515.02
Miami Dade Product Control
By Manuel Perez

GONZALO A. PAZ
LICENSE
No 60734
STATE OF FLORIDA
PROFESSIONAL ENGINEER

11/4/2015

EASTERN ENGINEERING GROUP
3401 NW 82 AVE SUITE 370 Miami, Florida 33122
Tel. (305) 599-8133 Fax. (305) 599-8076
www.easterneg.com
☐ RAISSA R. LOPEZ, PE (Lic No-59399)
☐ GONZALO A. PAZ, PE (Lic No-60734)
CERT. OF AUTHORIZATION No. 26655

REVISIONS

No.	DATE	DESCRIPTION

JOB No. 14 406
DESIGNED & DRAWN:
SCALE : AS SHOWN

Product: SERIES FX370 (L.M.I.)

RC HOME SHOWCASE
ALUMINUM WINDOWS AND DOORS
16115 NW 52nd Ave.
Miami Gardens, FL 33014
Phone: (305) 392 - 6214
Fax: (305) 260 - 6432

CODE	PART No.	DESCRIPTION (MATERIAL)	MANUFACTURER
		EXTRUSIONS	
E1	FX345-005	INTERMEDIATE GLAZING COVER (ALLOY 6063-T6)	FISA
E2	FX345-006	HEAD & SILL GLAZING COVER (ALLOY 6063-T6)	FISA
E3	FX370-011	INTERIOR SNAP COVER (ALLOY 6063-T6)	FISA
E4	FX370-041	HORIZONTAL INTERMEDIATE (ALLOY 6063-T5)	FISA
E5	FX370-042	7" MALE MULLION (ALLOY 6063-T6)	FISA
E6	FX370-043	7" FEMALE MULLION (ALLOY 6063-T6)	FISA
E7	FX370-051	HEAD & SILL (ALLOY 6063-T6)	FISA
E8	FX370-066	7" CLOSED JAMB EXTRUSION (ALLOY 6063-T6)	FISA
		MISCELANEOUS	
M1		2"X3"X1/8" THK. ALUM TUBE, 7 3/4" LONG (A. 6063-T6)	FISA
M2		REINFORCING BAR (1/2" X 5") FULL LENGTH (STEEL A-36)	
M3		5/8"x3/8"x4"LG SETTING BLOCK SEE NOTE @SHEET 5 OF 7	MELTPOINT
M4		DC995 / DC983 SILICONE.	
M5	V-088	3/8" OFFSET GASKET.	
M6	V-038	BACK-UP VINIL.	
M7	V-2100	3/16" X 1/2" SINGLE FACE TAPE NORTON THERMAL BOND	
		SCREWS	
S1		#12 X 1 1/4" LG. HH. SMS FRAME ASSEMBLY SCREW	
S2		1/4"-20 X 1" LG. HX. HD. MACHINE SCREW ST/ST	
S3		1/4"ø-20 X 2 1/2" LG. HD. HX. KWIK-FLEX Gr 5 INSTALLATION SCREWS	
S4		1/4" DIA. HX. HD. KWIK-CON II PLUS	
		GLASS	
G1	9/16" THK. LMI	1/4" H.S. OUTSIDE + 0.090 SG + 1/4" H.S. INSIDE BY KURARAY AMERICA, INC.	

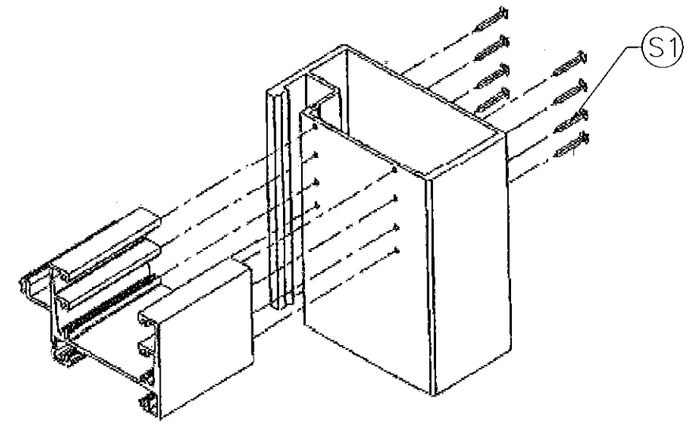

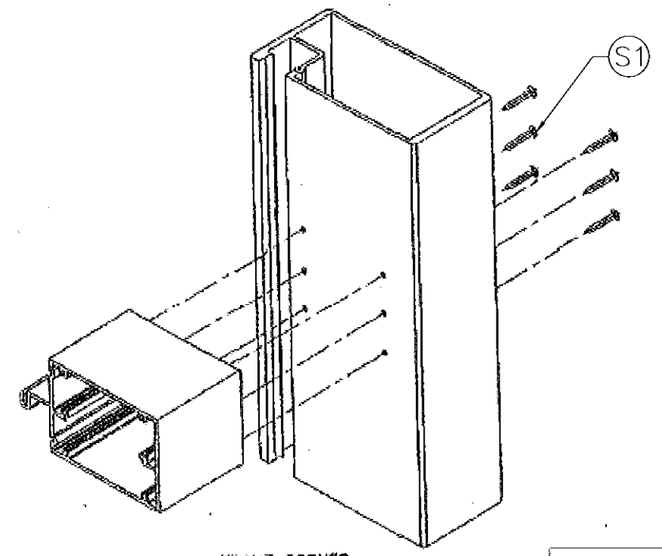

FRAME CORNER

Approved as complying with the
Florida Building Code
Date 12/10/2015
NOA# 15-0515.02
Miami Dade Product Control
By Manuel Perez

GONZALO A. PAZ
LICENSE
No 60734
STATE OF
FLORIDA
PROFESSIONAL ENGINEER

EASTERN ENGINEERING GROUP
3401 NW 82 AVE SUITE 370 Miami, Florida 33122
Tel. (305) 599-8133 Fax. (305) 599-8076
www.easteneg.com
☐ RAISSA R. LOPEZ, PE (Lic No-59399)
☐ GONZALO A. PAZ, PE (Lic No-60734)
CERT. OF AUTHORIZATION No. 26655

REVISIONS

No.	DATE	DESCRIPTION

JOB No. 14 406
DESIGNED & DRAWN:
SCALE : AS SHOWN

Product: SERIES FX370 (L.M.I.)

ARC HOME SHOWCASE
ALUMINUM WINDOWS AND DOORS
16115 NW 52nd Ave.
Miami Gardens, FL 33014
Phone: (305) 392 - 6214
Fax: (305) 260 - 6432

11/4/2015

SHEET: 7 OF 7