MIAMI-DADE COUNTY
DEPARTMENT OF REGULATORY AND ECONOMIC RESOURCES (RER)
BOARD AND CODE ADMINISTRATION DIVISION

MIAMI-DADE COUNTY
PRODUCT CONTROL SECTION
11805 SW 26 Street, Room 208
T (786) 315-2590 F (786) 315-2599
www.miamidade.gov/economy

# NOTICE OF ACCEPTANCE (NOA)

**PGT Industries, Inc.**
**1070 Technology Drive**
**North Venice, FL 34275**

**SCOPE:**

This NOA is being issued under the applicable rules and regulations governing the use of construction materials. The documentation submitted has been reviewed and accepted by Miami-Dade County RER - Product Control Section to be used in Miami Dade County and other areas where allowed by the Authority Having Jurisdiction (AHJ).

This NOA shall not be valid after the expiration date stated below. The Miami-Dade County Product Control Section (In Miami-Dade County) and/or the AHJ (in areas other than Miami-Dade County) reserve the right to have this product or material tested for quality assurance purposes. If this product or material fails to perform in the accepted manner, the manufacturer will incur the expense of such testing and the AHJ may immediately revoke, modify, or suspend the use of such product or material within their jurisdiction. RER reserves the right to revoke this acceptance, if it is determined by Miami–Dade County Product Control Section that this product or material fails to meet the requirements of the applicable building code.

This product is approved as described herein, and has been designed to comply with the Florida Building Code, including the High Velocity Hurricane Zone.-

**DESCRIPTION: Series "CA-640F Fixed Casement" Aluminum Fixed Window - N.I.**

**APPROVAL DOCUMENT:** Drawing No. **MD-CA640F-NI**, titled "Fixed Casement Window Details - NI", sheets 1 through 10 of 10, dated 08/08/12, with revision **A** dated 05/15/15, prepared by manufacturer, signed and sealed by Anthony Lynn Miller, P.E., bearing the Miami–Dade County Product Control Revision stamp with the Notice of Acceptance number and expiration date by the Miami-Dade County Product Control Section.

**MISSILE IMPACT RATING: None.**

**LABELING:** Each unit shall bear a permanent label with the manufacturer's name or logo, city, state, model/series, and following statement: "Miami-Dade County Product Control Approved", unless otherwise noted herein.

**RENEWAL** of this NOA shall be considered after a renewal application has been filed and there has been no change in the applicable building code negatively affecting the performance of this product.

**TERMINATION** of this NOA will occur after the expiration date or if there has been a revision or change in the materials, use, and/or manufacture of the product or process. Misuse of this NOA as an endorsement of any product, for sales, advertising or any other purposes shall automatically terminate this NOA. Failure to comply with any section of this NOA shall be cause for termination and removal of NOA.

**ADVERTISEMENT:** The NOA number preceded by the words Miami-Dade County, Florida, and followed by the expiration date may be displayed in advertising literature. If any portion of the NOA is displayed, then it shall be done in its entirety.

**INSPECTION:** A copy of this entire NOA shall be provided to the user by the manufacturer or its distributors and shall be available for inspection at the job site at the request of the Building Official.

This NOA **revises NOA# 12-1218.12** and consists of this page 1 and evidence pages E-1 and E-2, as well as approval document mentioned above.

The submitted documentation was reviewed by **Manuel Perez, P.E.**

MIAMI-DADE COUNTY APPROVED

8/13/15

## NOTICE OF ACCEPTANCE: EVIDENCE SUBMITTED

**A. DRAWINGS**

1. Manufacturer's die drawings and sections.
   ***(Submitted under previous NOA No. 12-1218.12)***
2. Drawing No. **MD-CA640F-NI**, titled "Fixed Casement Window Details - NI", sheets 1 through 10 of 10, dated 08/08/12, with revision A dated 05/15/15, prepared by manufacturer, signed and sealed by Anthony Lynn Miller, P.E.

**B. TESTS**

1. Test reports on: 1) Air Infiltration Test, per FBC, TAS 202-94
   2) Uniform Static Air Pressure Test, Loading per FBC TAS 202-94
   3) Water Resistance Test, per FBC, TAS 202-94

   along with marked-up drawings and installation diagram of a series CA640F aluminum fixed window, prepared by Fenestration Testing Laboratory, Inc. Test Report No. **FTL-7060**, dated 09/07/12, signed and sealed by Marlin D. Brinson, P.E.
   ***(Submitted under previous NOA No. 12-1218.12)***
2. Test reports on: 1) Air Infiltration Test, per FBC, TAS 202-94
   2) Uniform Static Air Pressure Test, Loading per FBC, TAS 202-94
   3) Water Resistance Test, per FBC, TAS 202-94
   4) Forced Entry Test, per FBC 2411.3.2.1, and TAS 202-94

   along with marked-up drawings and installation diagram of a series CA-740 outswing aluminum casement window mulled to a fixed window, prepared by Fenestration Testing Laboratory, Inc., Test Report No. **FTL-3579**, dated 10/03/02, signed and sealed by Joseph Chan, P.E.
   ***(Submitted under previous NOA No. 12-1218.12)***
3. Test reports on: 1) Air Infiltration Test, per FBC, TAS 202-94
   2) Uniform Static Air Pressure Test, Loading per FBC, TAS 202-94
   3) Water Resistance Test, per FBC, TAS 202-94
   4) Large Missile Impact Test per FBC, TAS 201-94
   5) Cyclic Wind Pressure Loading per FBC, TAS 203-94
   6) Forced Entry Test, per FBC 2411.3.2.1, and TAS 202-94

   along with marked-up drawings and installation diagram of a series CA-740 outswing aluminum casement window mulled to a fixed window, prepared by Fenestration Testing Laboratory, Inc., Test Report No. **FTL-3580**, dated 10/03/02, signed and sealed by Joseph Chan, P.E.
   ***(Submitted under previous NOA No. 12-1218.12)***

Manuel Perez

**Manuel Perez, P.E.**
**Product Control Examiner**
**NOA No. 15-0519.16**
**Expiration Date: April 11, 2018**
**Approval Date: August 20 2015**

## NOTICE OF ACCEPTANCE: EVIDENCE SUBMITTED

**B. TESTS** (CONTINUED)

**3.** Test reports on: 1) Air Infiltration Test, per FBC, TAS 202-94
2) Uniform Static Air Pressure Test, Loading per FBC, TAS 202-94
3) Water Resistance Test, per FBC, TAS 202-94
4) Large Missile Impact Test per FBC, TAS 201-94
5) Cyclic Wind Pressure Loading per FBC, TAS 203-94
6) Forced Entry Test, per FBC 2411.3.2.1, and TAS 202-94

along with marked-up drawings and installation diagram of a series CA-740 aluminum fixed window mulled to a projected window, prepared by Fenestration Testing Laboratory, Inc., Test Report No. **FTL-3724**, dated 02/28/02, signed and sealed by Joseph Chan, P.E.
***(Submitted under previous NOA No. 12-1218.12)***

**C. CALCULATIONS**

**1.** Anchor verification calculations and structural analysis, complying with **FBC-5th Edition (2014)**, dated 05/16/15, prepared by manufacturer, signed and sealed by Anthony Lynn Miller, P.E.

**2.** Glazing complies with **ASTM E1300-04**

**D. QUALITY ASSURANCE**

**1.** Miami-Dade Department of Regulatory and Economic Resources (RER).

**E. MATERIAL CERTIFICATIONS**

**1.** None.

**F. STATEMENTS**

**1.** Statement letter of conformance, complying with **FBC-5th Edition (2014)**, dated May 16, 2015, issued by manufacturer, signed and sealed by Anthony Lynn Miller, P.E.

**2.** Statement letter of no financial interest, dated May 16, 2015, issued by manufacturer, signed and sealed by Anthony Lynn Miller, P.E.

**G. OTHERS**

**1.** Notice of Acceptance No. **12-1218.12**, issued to PGT Industries for their Series "CA-640F Fixed Casement" Aluminum Fixed Window - N.I." approved on 04/11/13 and expiring on 04/11/18.

**Manuel Perez, P.E.**
**Product Control Examiner**
**NOA No. 15-0519.16**
**Expiration Date: April 11, 2018**
**Approval Date: August 20 2015**

## GENERAL NOTES: SERIES 640
## NON-IMPACT FIXED CASEMENT WINDOW

1) THIS PRODUCT HAS BEEN DESIGNED & TESTED TO COMPLY WITH THE REQUIREMENTS OF THE FLORIDA BUILDING CODE, INCLUDING THE HIGH VELOCITY HURRICANE ZONE (HVHZ).

2) SHUTTERS ARE REQUIRED WHEN USED IN WIND-BORNE DEBRIS REGIONS.

3) FOR MASONRY APPLICATIONS IN MIAMI-DADE COUNTY, USE ONLY MIAMI-DADE COUNTY APPROVED MASONRY ANCHORS. MATERIALS USED FOR ANCHOR EVALUATIONS WERE SOUTHERN PINE, ASTM C90 CONCRETE MASONRY UNITS AND CONCRETE WITH MIN. KSI PER ANCHOR TYPE, SEE TABLE 3, SHEET 4.

4) ALL WOOD BUCKS LESS THAN 1-1/2" THICK ARE TO BE CONSIDERED 1X INSTALLATIONS. 1X WOOD BUCKS ARE OPTIONAL IF UNIT IS INSTALLED DIRECTLY TO SUBSTRATE. WOOD BUCKS DEPICTED AS 2X ARE 1-1/2" THICK OR GREATER. 1X AND 2X BUCKS (WHEN USED) SHALL BE DESIGNED TO PROPERLY TRANSFER LOADS TO THE STRUCTURE. WOOD BUCK DESIGN AND INSTALLATION IS THE RESPONSIBILITY OF THE ENGINEER OR ARCHITECT OF RECORD.

5) ANCHOR EMBEDMENT TO BASE MATERIAL SHALL BE BEYOND WALL DRESSING OR STUCCO. USE ANCHORS OF SUFFICIENT EMBEDMENT AS SPECIFIED ON TABLE 3, SHEET 4. NARROW JOINT SEALANT IS USED ON ALL FOUR CORNERS OF THE FRAME. INSTALLATION ANCHORS SHOULD BE SEALED. OVERALL SEALING/FLASHING STRATEGY FOR WATER RESISTANCE OF INSTALLATION SHALL BE DONE BY OTHERS AND IS BEYOND THE SCOPE OF THESE INSTRUCTIONS.

6) SHIMS ARE REQUIRED AT EACH ANCHOR LOCATION WHERE THE PRODUCT IS NOT FLUSH TO THE SUBSTRATE. USE SHIMS CAPABLE OF TRANSFERRING APPLIED LOADS. WOOD BUCKS, BY OTHERS, MUST BE SUFFICIENTLY ANCHORED TO RESIST LOADS IMPOSED ON THEM BY THE WINDOW.

7) DESIGN PRESSURES:
A. NEGATIVE DESIGN LOADS BASED ON STRUCTURAL TEST PRESSURE, FRAME ANALYSIS AND GLASS PER ASTM E1300.
B. POSITIVE DESIGN LOADS BASED ON WATER TEST PRESSURE, STRUCTURAL TEST PRESSURE, FRAME ANALYSIS AND GLASS PER ASTM E1300.

8) THE ANCHORAGE METHODS SHOWN HAVE BEEN DESIGNED TO RESIST THE WINDLOADS CORRESPONDING TO THE REQUIRED DESIGN PRESSURE. THE 33-1/3% STRESS INCREASE HAS NOT BEEN USED IN THE DESIGN OF THIS PRODUCT. THE 1.6 LOAD DURATION FACTOR WAS USED FOR THE EVALUATION OF ANCHORS INTO WOOD. ANCHORS THAT COME INTO CONTACT WITH OTHER DISSIMILAR MATERIALS SHALL MEET THE REQUIREMENTS OF THE FLORIDA BUILDING CODE FOR CORROSION RESISTANCE.

9) REFERENCES: TEST REPORTS FTL-7060, 3579, 3580, 3724; ELCO ULTRACON NOA; ELCO CRETEFLEX NOA; ANSI/AF&PA NDS FOR WOOD CONSTRUCTION AND ADM ALUMINUM DESIGN MANUAL.

| DESIGN PRESSURE RATING | IMPACT RATING |
|---|---|
| VARIES, SEE SHEETS 6-9 | NON-IMPACT RESISTANT |

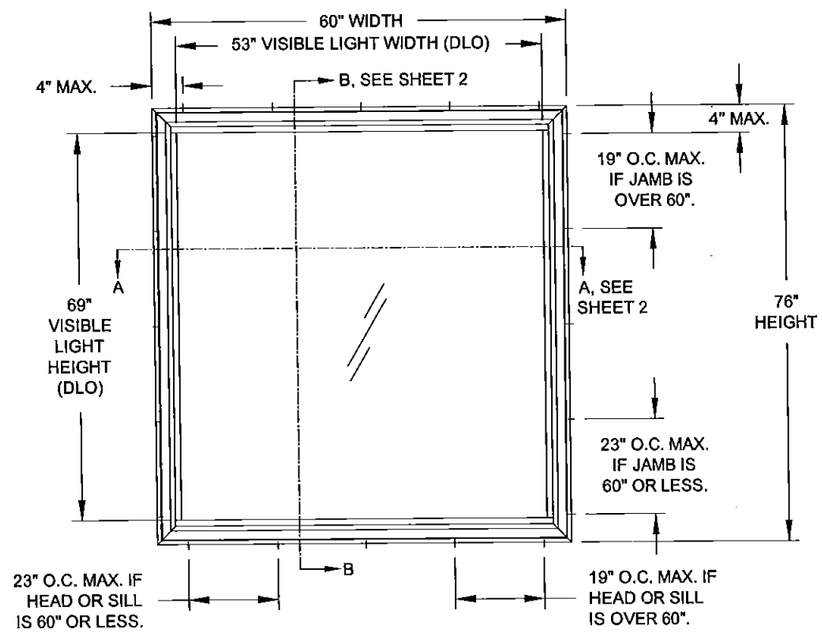


## TYP. ELEVATION OF FIXED CASEMENT WINDOW

TABLE 1:

| | Glass Types | Sheet # |
|---|---|---|
| 1 | 1/8" Annealed | 6 |
| 2 | 1/8" Tempered | 6 |
| 3 | 3/16" Annealed | 7 |
| 4 | 3/16" Tempered | 9 |
| 5 | 1/4" Annealed | 7 |
| 6 | 1/4" Tempered | 9 |
| 7 | 9/16" IG: (1/8" An - 5/16" Air - 1/8" An) | 7 |
| 8 | 9/16" IG: (1/8" T - 5/16" Air - 1/8" T) | 7 |
| 9 | 7/8" IG: (3/16" An - 1/2" Air - 3/16" An) | 8 |
| 10 | 7/8" IG: (3/16" T - 1/2" Air - 3/16" T) | 9 |

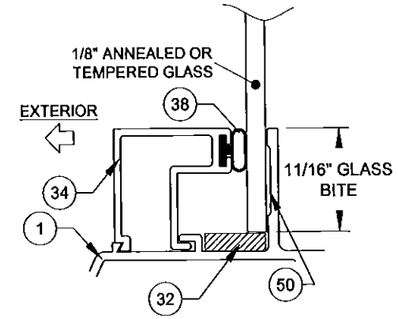


GLASS TYPES 1 & 2

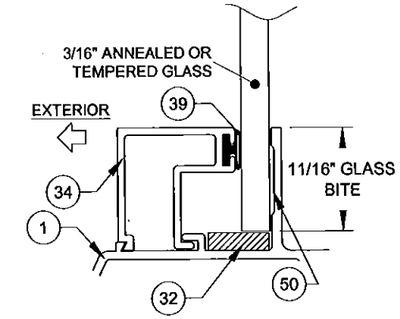


GLASS TYPES 3 & 4

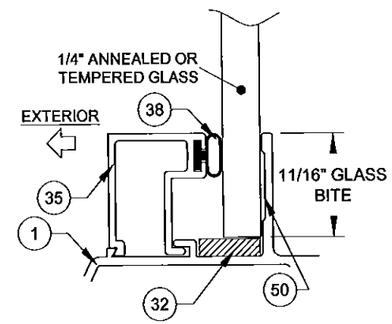


GLASS TYPES 5 & 6

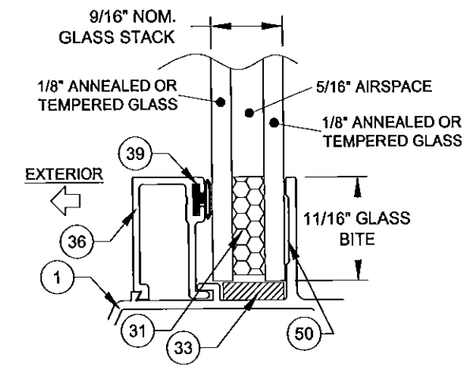


GLASS TYPES 7 & 8

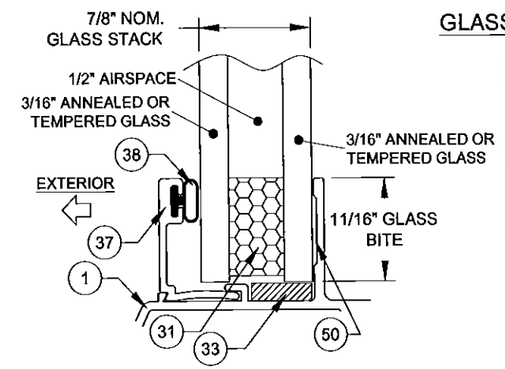


GLASS TYPES 9 & 10


GENERAL NOTES.....1
ELEVATION.....1
GLAZING DETAILS.....1
INSTALLATION.....2
ASSEMBLY TUBE DETAILS.....3
ANCHOR SPECIFICATIONS.....4
ANCHOR QUANTITIES.....4-5
DESIGN PRESSURES.....6-9
ASSEMBLY DETAILS/BOM.....10


ANTHONY LYNN MILLER
LICENSE
No. 58705
STATE OF FLORIDA
PROFESSIONAL ENGINEER
5/16/15
A. LYNN MILLER, P.E.
P.E.# 58705


PGT®
1070 TECHNOLOGY DRIVE
N. VENICE, FL 34275
P.O. BOX 1529
NOKOMIS, FL 34274
CERT. OF AUTH. #29296


PRODUCT REVISED
as complying with the Florida Building Code
Acceptance No 15-0519.16
Expiration Date April 11, 2018
By Manuel Cruz
Miami-Dade Product Control

| Revised By: | Date: | Revision B: |
|---|---|---|
| | | |
| **Revised By:** | **Date:** | **Revision A:** |
| LM | 5/15/15 | 5TH EDITION (2014) FBC UPDATE |

| Description: | Drawn By: |
|---|---|
| GENERAL NOTES & ELEVATION | J ROSOWSKI |

| Title: | Date: |
|---|---|
| FIXED CASEMENT WINDOW DETAILS - NI | 08/08/12 |

| Series/Model: | Scale: | Sheet: | Drawing No. | Rev: |
|---|---|---|---|---|
| CA-640 | NTS | 1 OF 10 | MD-CA640F-NI | A |

## INSTALLATION OPTION 1

INSTALLATION ANCHORS INTO 2X WOOD.

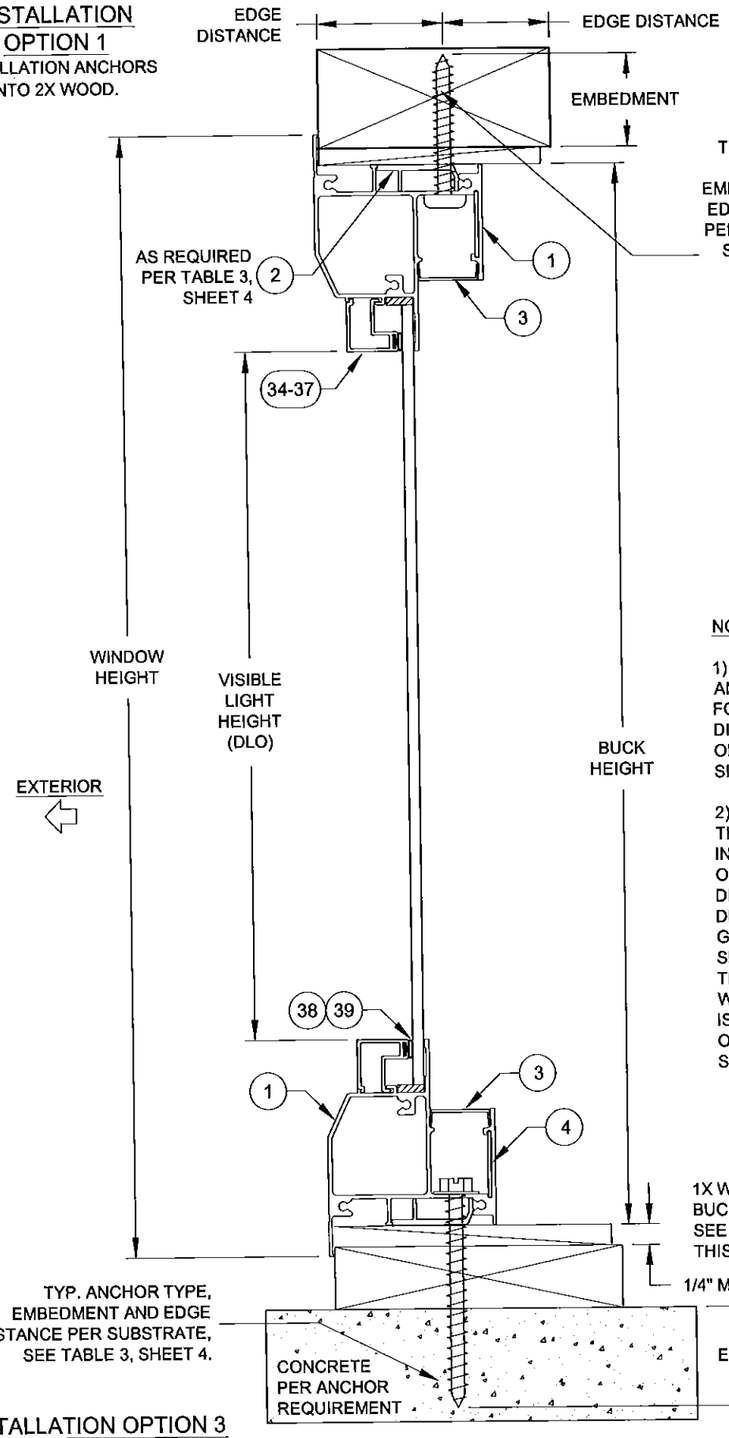


## INSTALLATION OPTION 3

INSTALLATION ANCHORS THROUGH 1X BUCKSTRIP INTO MASONRY.

## VERTICAL SECTION B-B

## INSTALLATION OPTION 2

INSTALLATION ANCHORS DIRECTLY INTO MASONRY.

## INSTALLATION OPTION 4

INSTALLATION ANCHORS DIRECTLY INTO METAL.

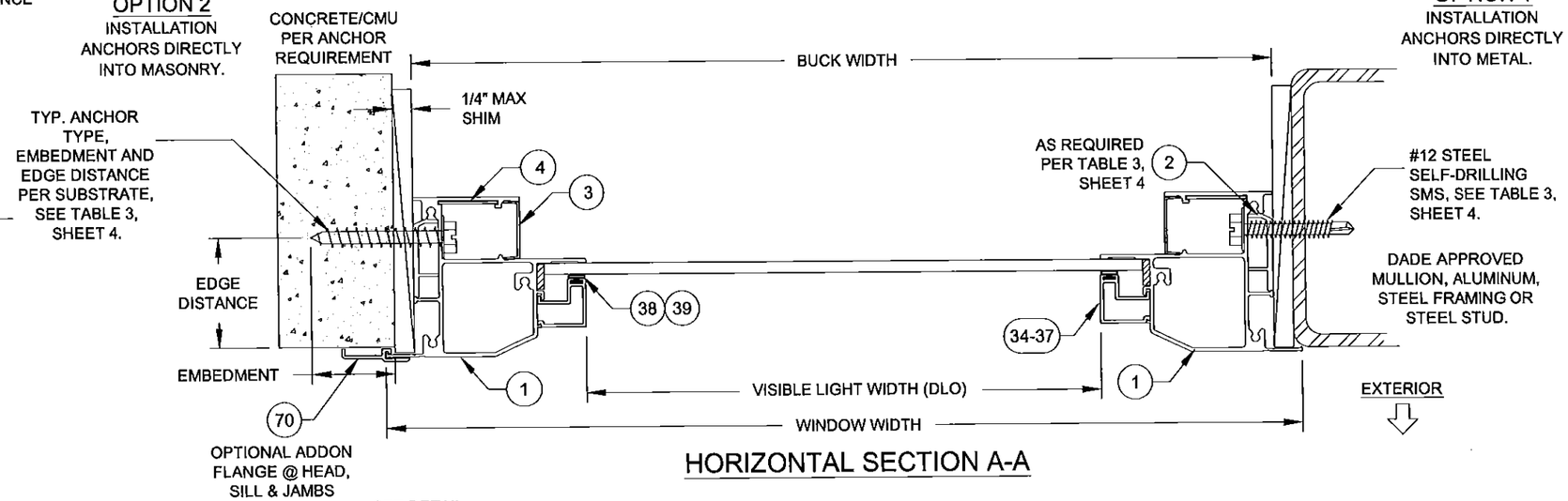


## HORIZONTAL SECTION A-A

NOTES:

1) USE ONLY SUBSTRATE-APPROPRIATE ANCHORS LISTED ON TABLE 3, SHEET 4. FOLLOW EMBEDMENT AND EDGE DISTANCE LIMITS. ANY INSTALLATION OPTION SHOWN MAY BE USED ON ANY SIDE OF THE WINDOW.

2) ALL WOOD BUCKS LESS THAN 1-1/2" THICK ARE TO BE CONSIDERED 1X INSTALLATIONS. 1X WOOD BUCKS ARE OPTIONAL. UNIT MAY BE INSTALLED DIRECTLY TO SUBSTRATE. WOOD BUCKS DEPICTED AS 2X ARE 1-1/2" THICK OR GREATER. 1X AND 2X BUCKS (WHEN USED) SHALL BE DESIGNED TO PROPERLY TRANSFER LOADS TO THE STRUCTURE. WOOD BUCK DESIGN AND INSTALLATION IS THE RESPONSIBILITY OF THE ENGINEER OR ARCHITECT OF RECORD. MAXIMUM SHIM THICKNESS TO BE 1/4".

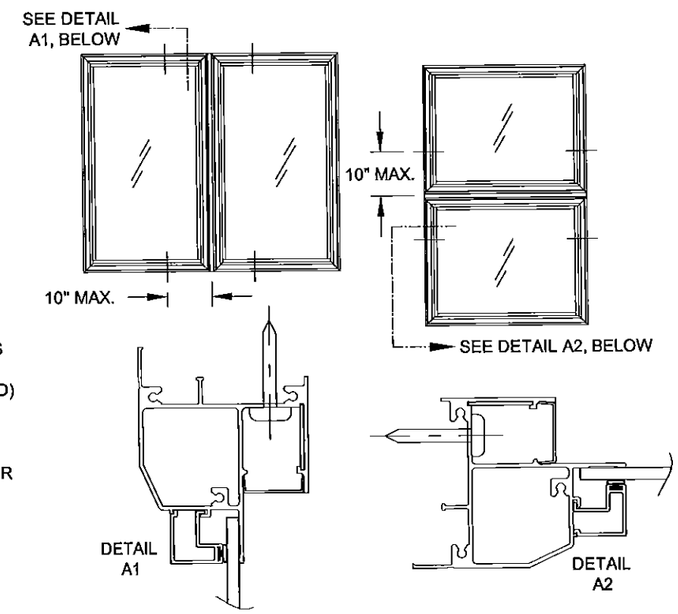


NOTES:

1) WHEN INSTALLING COMBINATION UNITS, ADDITIONAL INSTALLATION ANCHORS MAY NEED TO BE INSTALLED THROUGH THE WINDOW FRAMES AT 10" MAX. FROM EACH SIDE OF THE FRAME ASSEMBLY TUBE CENTERLINE. SEE TABLE BELOW:

| Additional Anchors Required on each Side of the Frame Assembly Tube (FAT) | | | |
|---|---|---|---|
| Vertical FAT | Window Width | Anchor Type | |
| | | A | B, C & D |
| | 17" - 22.9" | 0 | 0 |
| | 23" - 25.9" | 0 | 1 |
| | 26"+ | 1 | 1 |
| Horizontal FAT | Window Height | Anchor Type | |
| | | A | B, C & D |
| | 17" - 22.9" | 0 | 0 |
| | 23" - 25.9" | 0 | 1 |
| | 26"+ | 1 | 1 |

VISIBLE LIGHT FORMULAS

WIDTH: WINDOW WIDTH - 7

HEIGHT: WINDOW HEIGHT - 7

PRODUCT REVISED as complying with the Florida Building Code Acceptance No 15-0519.16 Expiration Date April 11, 2018 By Manuel Perez Miami Dade Product Control

ANTHONY LYNN MILLER LICENSE No. 58705 STATE OF FLORIDA PROFESSIONAL ENGINEER 5/16/15

A. LYNN MILLER, P.E. P.E.# 58705

PGT®

1070 TECHNOLOGY DRIVE
N. VENICE, FL 34275
P.O. BOX 1529
NOKOMIS, FL 34274

CERT. OF AUTH. #29296

| Revised By: | Date: | Revision B: |
|---|---|---|
| Revised By: LM | Date: 5/15/15 | Revision A: NO CHANGE THIS SHEET |

| | | | | |
|---|---|---|---|---|
| Description: GENERAL NOTES & ELEVATION | | | Drawn By: J ROSOWSKI | |
| Title: FIXED CASEMENT WINDOW DETAILS - NI | | | | Date: 08/08/12 |
| Series/Model: CA-640 | Scale: NTS | Sheet: 2 OF 10 | Drawing No. MD-CA640F-NI | Rev: A |

## FIXED CASEMENT (O)

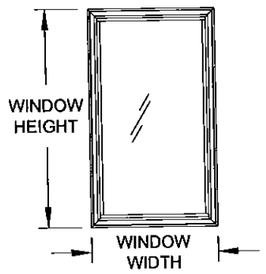


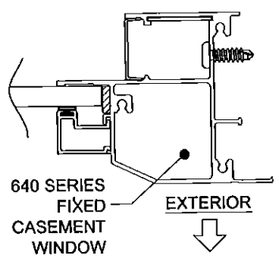


FOR SINGLE UNITS:

1) DETERMINE YOUR WINDOW SIZE AND GLASS.

2) KNOWING YOUR ANCHOR TYPE AND SUBSTRATE, DETERMINE YOUR ANCHOR GROUP FROM TABLE 3, SHEET 4.

3) FROM SHEETS 6-9, FIND THE SHEET FOR YOUR GLASS TYPE. FIND THE PRODUCT'S DESIGN PRESSURE FROM THE TABLE LABELED *"DESIGN PRESSURE (PSF) FOR SINGLE WINDOWS, ALL ANCHOR GROUPS"*.

4) DIMENSIONS SHOWN ARE TIP-TO-TIP. FOR SIZES NOT SHOWN, ROUND UP TO THE NEXT AVAILABLE WIDTH OR HEIGHT DIMENSION SHOWN ON THE TABLES.

5) USING THE TABLES LABELED *"WINDOW ANCHORS REQUIRED"* (TABLES 2A & 2B, SHEETS 4 & 5), DETERMINE THE NUMBER OF ANCHORS NEEDED IN THE HEAD, SILL AND JAMBS OF YOUR WINDOW.

6) INSTALL AS PER THE INSTRUCTIONS ON SHEET 2.

## FIXED CASEMENT / CASEMENT (OX)

FIGURE 1:

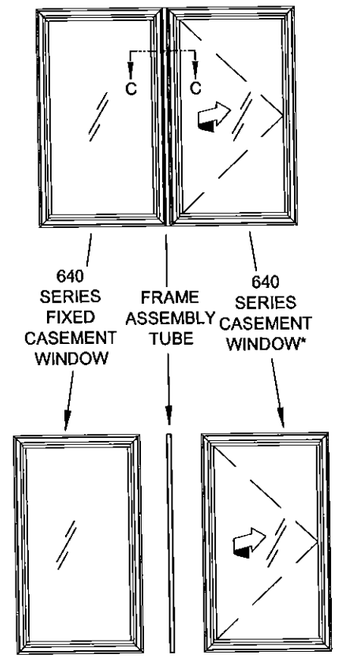


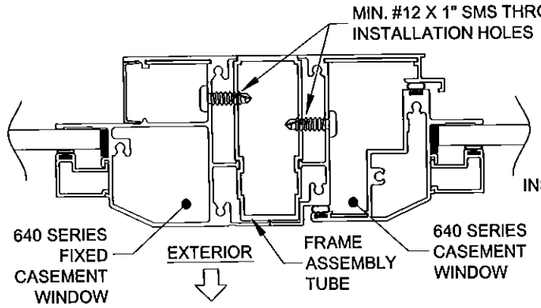


HORIZONTAL SECTION C-C

## AWNING / CASEMENT / FIXED CASEMENT (XXO)

FIGURE 2:

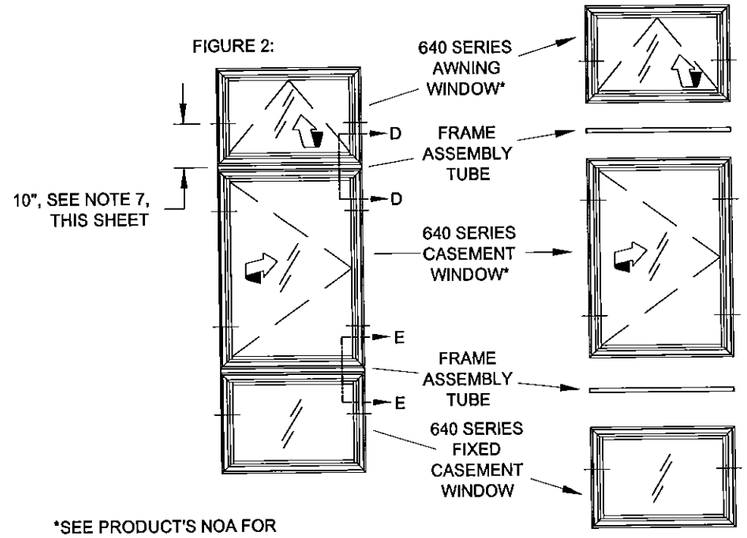


*SEE PRODUCT'S NOA FOR INSTALLATION SPECS

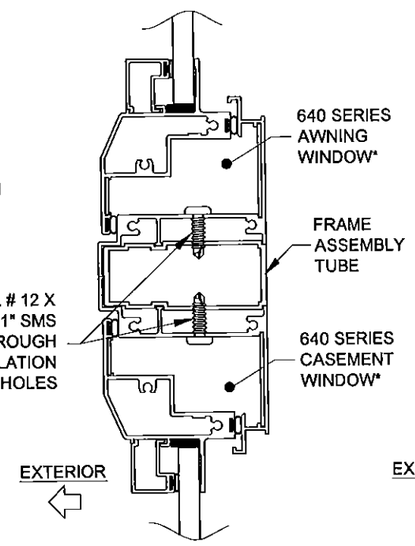


VERTICAL SECTION D-D

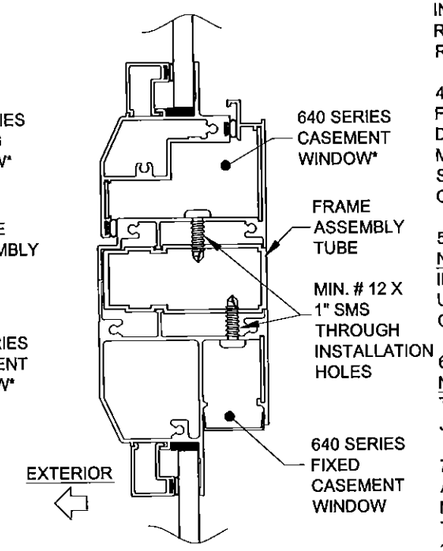


VERTICAL SECTION E-E

FOR EACH WINDOW IN A COMBINED ASSEMBLY:

1) DETERMINE EACH INDIVIDUAL WINDOW TYPE, SIZE AND GLASS MAKEUP, SEE FIGURES 1 & 2, THIS SHEET. DETERMINE YOUR ANCHOR GROUP FROM TABLE 3, SHEET 4.

2) FROM SHEETS 6-9, FIND THE SHEET FOR YOUR GLASS TYPE.

3) FIND THE DESIGN PRESSURE FROM THE TABLES LABELED *"WINDOW ANCHORS REQUIRED"* (TABLES 2A & 2B, SHEETS 4 & 5). THIS MUST BE DONE FOR EACH WINDOW IN THE ASSEMBLY, AND THE LOWEST DESIGN PRESSURE APPLIES TO THE ENTIRE ASSEMBLY. DIMENSIONS SHOWN ARE TIP-TO-TIP. FOR SIZES NOT SHOWN, ROUND UP TO THE NEXT AVAILABLE WIDTH OR HEIGHT DIMENSION SHOWN ON THE TABLES.

4) USING THE TABLE LABELED *"WINDOW ANCHORS REQUIRED"* (TABLES 2A & 2B, SHEETS 4 & 5), DETERMINE THE NUMBER OF ANCHORS NEEDED IN THE HEAD, SILL AND JAMBS OF YOUR WINDOW.

5) INSTALL AS PER THE INSTRUCTIONS ON SHEETS 2-3. NOTE THAT ADDITIONAL ANCHORS THROUGH THE WINDOW FRAME INTO THE SUBSTRATE MAY BE REQUIRED (SEE SHEET 2), AND THAT MIN. # 12 X 1" ANCHORS ARE TO BE USED THROUGH THE FRAME INTO THE FRAME ASSEMBLY TUBE (SEE DETAILS ON THIS SHEET).

FRAME ASSEMBLY TUBE NOTES:

1) DIMENSIONS SHOWN ARE TIP-TO-TIP DIMENSIONS FOR EACH INDIVIDUAL WINDOW. FOR SIZES NOT SHOWN, ROUND UP TO THE NEXT AVAILABLE WIDTH OR HEIGHT DIMENSION SHOWN ON THE TABLES.

2) ANY 640-SERIES PRODUCT (CASEMENT, AWNING OR FIXED CASEMENT) MAY BE ATTACHED TO THE FRAME ASSEMBLY TUBE. FOR ALL WINDOWS, USE THE WINDOW'S NOA FOR ANCHORAGE, SIZE AND DESIGN PRESSURE LIMITATIONS.

3) ALL WINDOWS IN THE COMBINATION UNIT MUST BE ABLE TO INDIVIDUALLY COMPLY WITH THE REQUIREMENTS OF THEIR RESPECTIVE NOA.

4) FRAME ASSEMBLY TUBE TO BE FASTENED TO WINDOW, AS SHOW IN DETAILS, WITH MIN. #12 X 1" SHEET METAL SCREWS. USE THE SAME SPACING AND QUANTITY AS THE OPPOSITE FRAME MEMBER.

5) THE FRAME ASSEMBLY TUBE MAY NOT EXCEED 62" IN LENGTH (AS USED IN A 63" FLANGED WINDOW) OR BE USED IN TEE OR CROSS CONFIGURATIONS.

6) THE FRAME ASSEMBLY TUBE IS NOT REQUIRED TO BE CLIPPED TO THE SUBSTRATE. ALL EXTERIOR JOINTS TO BE SEALED BY INSTALLER.

7) FOR ALL COMBINATION UNITS, ADDITIONAL INSTALLATION ANCHORS MAY NEED TO BE INSTALLED THROUGH THE WINDOW FRAMES AT 10" MAX. FROM EACH SIDE OF THE FRAME ASSEMBLY TUBE CENTERLINE. SEE TABLE BELOW:

| Additional Anchors Required on each Side of the Frame Assembly Tube (FAT) | | | |
|---|---|---|---|
| Vertical FAT | Window Width | Anchor Type | |
| | | A | B, C & D |
| | 17" - 22.9" | 0 | 0 |
| | 23" - 25.9" | 0 | 1 |
| | 26"+ | 1 | 1 |
| Horizontal FAT | Window Height | Anchor Type | |
| | | A | B, C & D |
| | 17" - 22.9" | 0 | 0 |
| | 23" - 25.9" | 0 | 1 |
| | 26"+ | 1 | 1 |

PRODUCT REVISED
as complying with the Florida Building Code
Acceptance No 15-0519.16
Expiration Date April 11, 2018
By Manuel Perez
Miami-Dade Product Control

| | | | |
|---|---|---|---|
| Revised By: L MILLER | Revision A: NO CHANGE THIS SHEET | | |
| Drawn By: J ROSOWSKI | Date: 5/15/15 | Date: 08/08/12 | |
| Description: FRAME ASSEMBLY TUBE DETAILS | | | |
| Title: FIXED CASEMENT WINDOW DETAILS - NI | | | |
| Series/Model: CA-640 | Scale: NTS | Sheet: 3 OF 10 | Drawing No. MD-CA640F-NI |
| | | | Rev: A |


1070 TECHNOLOGY DRIVE
N. VENICE, FL 34275
P.O. BOX 1529
NOKOMIS, FL 34274
CERT. OF AUTH. #29296


ANTHONY LYNN MILLER
LICENSE
No. 58705
5/16/15
STATE OF FLORIDA
PROFESSIONAL ENGINEER
A. LYNN MILLER, P.E.
P.E.# 58705

TABLE 2A:

## Window Anchors Required (37" and Less on Short Side Dimension)

| Long Side | | Short Side: under 23" | | | | 25-15/16" | | | | 27-3/4 | | | | 29" | | | | 31-1/2" | | | | 33-1/2" | | | | 34" | | | | 37" | | | |
|---|---|---|---|---|---|---|---|---|---|---|---|---|---|---|---|---|---|---|---|---|---|---|---|---|---|---|---|---|---|---|---|---|---|
| Anchor Type → | | A | B | C | D | A | B | C | D | A | B | C | D | A | B | C | D | A | B | C | D | A | B | C | D | A | B | C | D | A | B | C | D |
| under 23" | Long Side | 2 | 2 | 2 | 2 | 2 | 2 | 2 | 2 | 2 | 2 | 2 | 2 | 2 | 2 | 2 | 2 | 2 | 2 | 2 | 2 | 2 | 2 | 2 | 2 | 2 | 2 | 2 | 2 | 2 | 2 | 2 | 2 |
| | Short Side | 2 | 2 | 2 | 2 | 2 | 2 | 2 | 2 | 2 | 2 | 2 | 2 | 2 | 2 | 2 | 2 | 3 | 3 | 3 | 3 | 3 | 3 | 3 | 3 | 3 | 3 | 3 | 3 | 3 | 3 | 3 | 3 |
| 25-15/16" | Long Side | 2 | 2 | 2 | 2 | 2 | 2 | 2 | 2 | 2 | 2 | 2 | 2 | 2 | 2 | 2 | 2 | 2 | 2 | 2 | 2 | 2 | 2 | 2 | 2 | 2 | 2 | 2 | 2 | 2 | 2 | 2 | 2 |
| | Short Side | 2 | 2 | 2 | 2 | 2 | 2 | 2 | 2 | 2 | 2 | 2 | 2 | 2 | 2 | 2 | 2 | 3 | 3 | 3 | 3 | 3 | 3 | 3 | 3 | 3 | 3 | 3 | 3 | 3 | 3 | 3 | 3 |
| 35" | Long Side | 3 | 3 | 3 | 3 | 3 | 3 | 3 | 3 | 3 | 3 | 3 | 3 | 3 | 3 | 3 | 3 | 3 | 3 | 3 | 3 | 3 | 3 | 3 | 3 | 3 | 3 | 3 | 3 | 3 | 3 | 3 | 3 |
| | Short Side | 2 | 2 | 2 | 2 | 2 | 2 | 2 | 2 | 2 | 2 | 2 | 2 | 2 | 2 | 2 | 2 | 3 | 3 | 3 | 3 | 3 | 3 | 3 | 3 | 3 | 3 | 3 | 3 | 3 | 4 | 3 | 3 |
| 37" | Long Side | 3 | 3 | 3 | 3 | 3 | 3 | 3 | 3 | 3 | 4 | 3 | 3 | 3 | 4 | 3 | 3 | 3 | 4 | 3 | 3 | 3 | 4 | 3 | 3 | 3 | 4 | 3 | 3 | 3 | 4 | 3 | 3 |
| | Short Side | 2 | 2 | 2 | 2 | 2 | 2 | 2 | 2 | 2 | 2 | 2 | 2 | 2 | 2 | 2 | 2 | 3 | 3 | 3 | 3 | 3 | 3 | 3 | 3 | 3 | 3 | 3 | 3 | 3 | 4 | 3 | 3 |
| 44" | Long Side | 3 | 4 | 3 | 3 | 3 | 4 | 3 | 3 | 4 | 4 | 3 | 3 | 4 | 5 | 3 | 3 | 4 | 5 | 3 | 3 | 4 | 5 | 3 | 3 | 4 | 5 | 3 | 3 | 4 | 5 | 3 | 3 |
| | Short Side | 2 | 2 | 2 | 2 | 2 | 2 | 2 | 2 | 2 | 2 | 2 | 2 | 2 | 2 | 2 | 2 | 3 | 3 | 3 | 3 | 3 | 3 | 3 | 3 | 3 | 3 | 3 | 3 | 3 | 4 | 3 | 3 |
| 44-1/4" | Long Side | 4 | 5 | 3 | 3 | 4 | 5 | 3 | 3 | 4 | 5 | 3 | 3 | 4 | 5 | 3 | 3 | 4 | 5 | 3 | 3 | 4 | 6 | 3 | 3 | 4 | 6 | 3 | 3 | 5 | 6 | 3 | 3 |
| | Short Side | 2 | 2 | 2 | 2 | 2 | 2 | 2 | 2 | 2 | 2 | 2 | 2 | 2 | 2 | 2 | 2 | 3 | 3 | 3 | 3 | 3 | 3 | 3 | 3 | 3 | 3 | 3 | 3 | 3 | 4 | 3 | 3 |
| 53-1/8" | Long Side | 4 | 5 | 3 | 3 | 4 | 5 | 3 | 3 | 5 | 6 | 3 | 3 | 5 | 6 | 3 | 3 | 5 | 6 | 4 | 3 | 5 | 6 | 4 | 3 | 5 | 6 | 4 | 3 | 5 | 7 | 4 | 3 |
| | Short Side | 2 | 2 | 2 | 2 | 2 | 2 | 2 | 2 | 2 | 2 | 2 | 2 | 2 | 2 | 2 | 2 | 3 | 3 | 3 | 3 | 3 | 3 | 3 | 3 | 3 | 3 | 3 | 3 | 3 | 4 | 3 | 3 |
| 58" | Long Side | 4 | 6 | 4 | 4 | 5 | 6 | 4 | 4 | 5 | 6 | 4 | 4 | 5 | 6 | 4 | 4 | 5 | 7 | 4 | 4 | 6 | 7 | 4 | 4 | 6 | 7 | 4 | 4 | 6 | 7 | 4 | 4 |
| | Short Side | 2 | 2 | 2 | 2 | 2 | 2 | 2 | 2 | 2 | 2 | 2 | 2 | 2 | 2 | 2 | 2 | 3 | 3 | 3 | 3 | 3 | 3 | 3 | 3 | 3 | 3 | 3 | 3 | 3 | 4 | 3 | 3 |
| 63" | Long Side | 5 | 6 | 4 | 4 | 5 | 7 | 4 | 4 | 6 | 7 | 4 | 4 | 6 | 7 | 4 | 4 | 6 | 8 | 4 | 4 | 6 | 8 | 4 | 4 | 6 | 8 | 5 | 4 | 7 | 8 | 5 | 4 |
| | Short Side | 2 | 2 | 2 | 2 | 2 | 2 | 2 | 2 | 2 | 2 | 2 | 2 | 2 | 2 | 2 | 2 | 3 | 3 | 3 | 3 | 3 | 3 | 3 | 3 | 3 | 3 | 3 | 3 | 3 | 4 | 3 | 3 |
| 66-13/16" | Long Side | 5 | 7 | 5 | 5 | 6 | 7 | 5 | 5 | 6 | 7 | 5 | 5 | 6 | 8 | 5 | 5 | 6 | 8 | 5 | 5 | 7 | 8 | 5 | 5 | 7 | 9 | 5 | 5 | 7 | 9 | 5 | 5 |
| | Short Side | 2 | 2 | 2 | 2 | 2 | 2 | 2 | 2 | 2 | 2 | 2 | 2 | 2 | 2 | 2 | 2 | 3 | 3 | 3 | 3 | 3 | 3 | 3 | 3 | 3 | 3 | 3 | 3 | 3 | 4 | 3 | 3 |
| 67-1/2" | Long Side | 5 | 7 | 5 | 5 | 6 | 7 | 5 | 5 | 6 | 8 | 5 | 5 | 6 | 8 | 5 | 5 | 7 | 8 | 5 | 5 | 7 | 9 | 5 | 5 | 7 | 9 | 5 | 5 | 7 | 9 | 5 | 5 |
| | Short Side | 2 | 2 | 2 | 2 | 2 | 2 | 2 | 2 | 2 | 2 | 2 | 2 | 2 | 2 | 2 | 2 | 3 | 3 | 3 | 3 | 3 | 3 | 3 | 3 | 3 | 3 | 3 | 3 | 3 | 4 | 3 | 3 |
| 68" | Long Side | 5 | 7 | 5 | 5 | 6 | 7 | 5 | 5 | 6 | 8 | 5 | 5 | 6 | 8 | 5 | 5 | 7 | 8 | 5 | 5 | 7 | 9 | 5 | 5 | 7 | 9 | 5 | 5 | 7 | 9 | 5 | 5 |
| | Short Side | 2 | 2 | 2 | 2 | 2 | 2 | 2 | 2 | 2 | 2 | 2 | 2 | 2 | 2 | 2 | 2 | 3 | 3 | 3 | 3 | 3 | 3 | 3 | 3 | 3 | 3 | 3 | 3 | 3 | 4 | 3 | 3 |
| 70" | Long Side | 6 | 7 | 5 | 5 | 6 | 8 | 5 | 5 | 6 | 8 | 5 | 5 | 6 | 8 | 5 | 5 | 7 | 9 | 5 | 5 | 7 | 9 | 5 | 5 | 7 | 9 | 5 | 5 | 8 | 10 | 5 | 5 |
| | Short Side | 2 | 2 | 2 | 2 | 2 | 2 | 2 | 2 | 2 | 2 | 2 | 2 | 2 | 2 | 2 | 2 | 3 | 3 | 3 | 3 | 3 | 3 | 3 | 3 | 3 | 3 | 3 | 3 | 3 | 4 | 3 | 3 |
| 72" | Long Side | 6 | 7 | 5 | 5 | 6 | 8 | 5 | 5 | 7 | 8 | 5 | 5 | 7 | 8 | 5 | 5 | 7 | 9 | 5 | 5 | 7 | 9 | 5 | 5 | 7 | 9 | 5 | 5 | 8 | 10 | 6 | 5 |
| | Short Side | 2 | 2 | 2 | 2 | 2 | 2 | 2 | 2 | 2 | 2 | 2 | 2 | 2 | 2 | 2 | 2 | 3 | 3 | 3 | 3 | 3 | 3 | 3 | 3 | 3 | 3 | 3 | 3 | 3 | 4 | 3 | 3 |
| 74" | Long Side | 6 | 7 | 5 | 5 | 6 | 8 | 5 | 5 | 7 | 8 | 5 | 5 | 7 | 9 | 5 | 5 | 7 | 9 | 5 | 5 | 8 | 10 | 5 | 5 | 8 | 10 | 5 | 5 | 8 | 10 | 6 | 5 |
| | Short Side | 2 | 2 | 2 | 2 | 2 | 2 | 2 | 2 | 2 | 2 | 2 | 2 | 2 | 2 | 2 | 2 | 3 | 3 | 3 | 3 | 3 | 3 | 3 | 3 | 3 | 3 | 3 | 3 | 3 | 4 | 3 | 3 |
| 76" | Long Side | 6 | 8 | 5 | 5 | 7 | 8 | 5 | 5 | 7 | 9 | 5 | 5 | 7 | 9 | 5 | 5 | 8 | 9 | 5 | 5 | 8 | 10 | 6 | 5 | 8 | 10 | 6 | 5 | 8 | 11 | 6 | 5 |
| | Short Side | 2 | 2 | 2 | 2 | 2 | 2 | 2 | 2 | 2 | 2 | 2 | 2 | 2 | 2 | 2 | 2 | 3 | 3 | 3 | 3 | 3 | 3 | 3 | 3 | 3 | 3 | 3 | 3 | 3 | 4 | 3 | 3 |
| 84" | Long Side | 7 | 8 | 5 | 5 | 7 | 9 | 5 | 5 | 8 | 10 | 5 | 5 | 8 | 10 | 6 | 5 | 8 | 11 | 6 | 5 | 9 | 11 | 6 | 6 | 9 | 11 | 6 | 6 | 10 | 12 | 7 | 6 |
| | Short Side | 2 | 2 | 2 | 2 | 2 | 2 | 2 | 2 | 2 | 2 | 2 | 2 | 2 | 2 | 2 | 2 | 3 | 3 | 3 | 3 | 3 | 3 | 3 | 3 | 3 | 3 | 3 | 3 | 3 | 4 | 3 | 3 |
| 114" | Long Side | 9 | 12 | 7 | 7 | 10 | 13 | 7 | 7 | 11 | 14 | 8 | 7 | 11 | 14 | 8 | 7 | 12 | 15 | 8 | 8 | 13 | 16 | 9 | 8 | 13 | 16 | 9 | 8 | 14 | 17 | 10 | 9 |
| | Short Side | 2 | 2 | 2 | 2 | 2 | 2 | 2 | 2 | 2 | 2 | 2 | 2 | 2 | 2 | 2 | 2 | 3 | 3 | 3 | 3 | 3 | 3 | 3 | 3 | 3 | 3 | 3 | 3 | 3 | 4 | 3 | 3 |
| 134" | Long Side | 11 | 14 | 8 | 8 | 12 | 15 | 9 | 8 | 13 | 16 | 9 | 8 | 13 | 17 | 9 | 9 | 14 | 18 | 10 | 9 | 15 | 19 | 11 | 10 | 15 | 19 | 11 | 10 | | | | |
| | Short Side | 2 | 2 | 2 | 2 | 2 | 2 | 2 | 2 | 2 | 2 | 2 | 2 | 2 | 2 | 2 | 2 | 3 | 3 | 3 | 3 | 3 | 3 | 3 | 3 | 3 | 3 | 3 | 3 | | | | |
| 145" | Long Side | 12 | 15 | 9 | 9 | 13 | 17 | 9 | 9 | 14 | 18 | 10 | 9 | 15 | 18 | 10 | 9 | 16 | 20 | 11 | 10 | | | | | | | | | | | | |
| | Short Side | 2 | 2 | 2 | 2 | 2 | 2 | 2 | 2 | 2 | 2 | 2 | 2 | 2 | 2 | 2 | 2 | 3 | 3 | 3 | 3 | | | | | | | | | | | | |

1) USE THIS TABLE FOR ALL WINDOWS PER THE ELEVATIONS ON SHEET 1. DIMENSIONS SHOWN ARE TIP-TO-TIP.

2) FOR SIZES NOT SHOWN, ROUND UP TO THE NEXT AVAILABLE SHORT OR LONG SIDE DIMENSION SHOWN ON THE TABLE.

3) THE WINDOW'S SHORT AND LONG SIDE MAY BE INVERTED.

4) SEE NEXT SHEET FOR ADDITIONAL INFORMATION.

PRODUCT REVISED
as complying with the Florida Building Code
Acceptance No 15-0519.16
Expiration Date April 11, 2018
By Manuel Perez
Miami-Dade Product Control

SAMPLE CONFIGURATIONS:

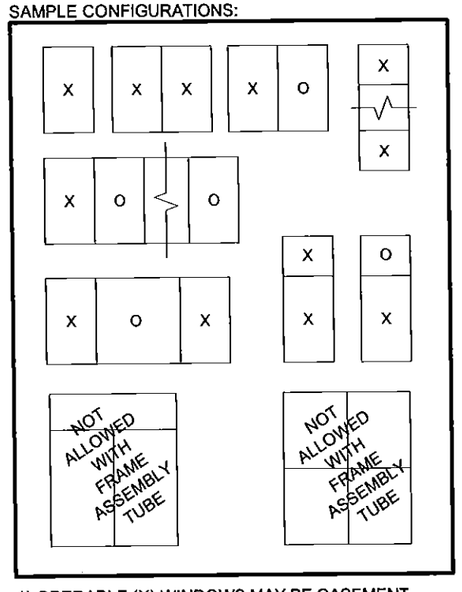


1) OPERABLE (X) WINDOWS MAY BE CASEMENT WINDOWS OR AWNING WINDOWS OF THE SAME SERIES.

TABLE 3:

| Group | Anchor | Substrate | Min. Edge Distance | Min. O.C. Distance | Min. Embedment | Anchor Plate Required? |
|---|---|---|---|---|---|---|
| A | 1/4" steel Ultracon | Hollow Block | 1" | 6" | 1-1/4" | No |
| | #14, steel SMS (G5) or #14, 410 SS SMS | S. Pine | 5/8" | 1" | 1-3/8" | No |
| | | 6063-T5 Alum. | 3/8" | 5/8" | .050" | No |
| | | A36 Steel | 3/8" | 5/8" | .050" | No |
| | | A653 Stud, Gr. 33 | 3/8" | 5/8" | .035", 20 Ga. | No |
| B | #12, steel SMS (G5) or #12, 410 SS SMS | S. Pine | 5/8" | 1" | 1-3/8" | No |
| | | 6063-T5 Alum. | 3/8" | 5/8" | .050" | No |
| | | A36 Steel | 3/8" | 5/8" | .050" | No |
| | | A653 Stud, Gr. 33 | 3/8" | 5/8" | .035", 20 Ga. | No |
| C | 1/4" steel Ultracon | 2.85k Concrete | 2-1/2" | 4" | 1-3/8" | No |
| | | 2.85k Concrete | 1" | 4" | 1-3/4" | No |
| | | Hollow Block | 2-1/2" | 5" | 1-1/4" | No |
| | #12, steel SMS (G5) or #12, 410 SS SMS | S. Pine | 5/8" | 1" | 1-3/8" | Yes |
| | | 6063-T5 Alum. | 3/8" | 5/8" | .0713" | Yes |
| | | A36 Steel | 3/8" | 5/8" | .050" | Yes |
| | | A653 Stud, Gr. 33 | 3/8" | 5/8" | .045", 18 Ga. | Yes |

TABLE 3: (cont.)

| Group | Anchor | Substrate | Min. Edge Distance | Min. O.C. Distance | Min. Embedment | Anchor Plate Required? |
|---|---|---|---|---|---|---|
| D | #14, steel SMS (G5) or #14, 410 SS SMS | S. Pine | 5/8" | 1" | 1-3/8" | Yes |
| | | 6063-T5 Alum. | 3/8" | 5/8" | .0713" | Yes |
| | | A36 Steel | 3/8" | 5/8" | .050" | Yes |
| | | A653 Stud, Gr. 33 | 3/8" | 5/8" | .045", 18 Ga. | Yes |
| | 1/4" steel Ultracon | 2.85k Concrete | 1" | 4" | 1-3/4" | Yes |
| | | 2.85k Concrete | 2-1/2" | 4" | 1-3/8" | Yes |
| | | Hollow Block | 2-1/2" | 5" | 1-1/4" | Yes |
| | | Filled Block | 2-1/2" | 4" | 1-3/4" | Yes |
| | 1/4" 410 SS CreteFlex | 3.35k Concrete | 1" | 5" | 1-3/4" | No |
| | | Hollow Block | 2-1/2" | 5" | 1-1/4" | No |
| | 5/16" steel Ultracon | 3.5k Concrete | 1-1/4" | 5" | 1-3/4" | No |
| | | Hollow Block | 3-1/8" | 5" | 1-1/4" | No |
| | | Filled Block | 2-1/2" | 5" | 1-3/4" | No |

A

1) ANCHOR MUST EXTEND A MIMIMUM OF 3 THREADS BEYOND ANY METAL SUBSTRATE.
2) ANCHORS MAY BE HEXHEAD, PANHEAD OR FLATHEAD.

Revision A: CHANGE ALUM. THICKNESS

Date: 5/15/15

Revised By: L MILLER

Date: 08/08/12

Drawn By: J ROSOWSKI

Description: ANCHOR TYPE A

Title: FIXED CASEMENT WINDOW DETAILS - NI

Rev: A

Drawing No. MD-CA640F-NI

Sheet: 4 OF 10

Scale: NTS

Series/Model: CA-640

1070 TECHNOLOGY DRIVE
N. VENICE, FL 34275
P.O. BOX 1529
NOKOMIS, FL 34274
CERT. OF AUTH. #29296

ANTHONY LYNN MILLER
LICENSE
No. 58705
5/16/15
STATE OF FLORIDA
PROFESSIONAL ENGINEER
A. LYNN MILLER, P.E.
P.E.# 58705

TABLE 2B:

## Window Anchors Required (Over 37" on Short Side Dimension)

| Long Side | Short Side | 40" | | | | 44" | | | | 48-1/4" | | | | 53-1/8" | | | | 54" | | | | 58" | | | | 60" | | | | 63" | | | | 67-1/2" | | | |
|---|---|---|---|---|---|---|---|---|---|---|---|---|---|---|---|---|---|---|---|---|---|---|---|---|---|---|---|---|---|---|---|---|---|---|---|---|---|
| Anchor Type → | | A | B | C | D | A | B | C | D | A | B | C | D | A | B | C | D | A | B | C | D | A | B | C | D | A | B | C | D | A | B | C | D | A | B | C | D |
| under 23" | Long Side | 2 | 2 | 2 | 2 | 2 | 2 | 2 | 2 | 2 | 2 | 2 | 2 | 2 | 2 | 2 | 2 | 2 | 2 | 2 | 2 | 2 | 2 | 2 | 2 | 2 | 2 | 2 | 2 | 2 | 2 | 2 | 2 | 2 | 2 | 2 | 2 |
| | Short Side | 3 | 4 | 3 | 3 | 3 | 4 | 3 | 3 | 4 | 5 | 3 | 3 | 4 | 5 | 3 | 3 | 4 | 5 | 3 | 3 | 4 | 6 | 4 | 4 | 5 | 6 | 4 | 4 | 5 | 6 | 4 | 4 | 5 | 7 | 5 | 5 |
| 25-15/16" | Long Side | 2 | 2 | 2 | 2 | 2 | 2 | 2 | 2 | 2 | 2 | 2 | 2 | 2 | 2 | 2 | 2 | 2 | 2 | 2 | 2 | 2 | 2 | 2 | 2 | 2 | 2 | 2 | 2 | 2 | 2 | 2 | 2 | 2 | 2 | 2 | 2 |
| | Short Side | 3 | 4 | 3 | 3 | 3 | 4 | 3 | 3 | 4 | 5 | 3 | 3 | 4 | 5 | 3 | 3 | 4 | 6 | 3 | 3 | 5 | 6 | 4 | 4 | 5 | 6 | 4 | 4 | 5 | 7 | 4 | 4 | 6 | 7 | 5 | 5 |
| 35" | Long Side | 3 | 3 | 3 | 3 | 3 | 3 | 3 | 3 | 3 | 3 | 3 | 3 | 3 | 3 | 3 | 3 | 3 | 3 | 3 | 3 | 3 | 3 | 3 | 3 | 3 | 3 | 3 | 3 | 3 | 3 | 3 | 3 | 3 | 3 | 3 | 3 |
| | Short Side | 3 | 4 | 3 | 3 | 4 | 5 | 3 | 3 | 5 | 6 | 3 | 3 | 5 | 6 | 4 | 3 | 5 | 7 | 4 | 3 | 6 | 7 | 4 | 4 | 6 | 8 | 4 | 4 | 6 | 8 | 5 | 4 | 7 | 9 | 5 | 5 |
| 37" | Long Side | 3 | 4 | 3 | 3 | 3 | 4 | 3 | 3 | 3 | 4 | 3 | 3 | 3 | 4 | 3 | 3 | 3 | 4 | 3 | 3 | 3 | 4 | 3 | 3 | 3 | 4 | 3 | 3 | 3 | 4 | 3 | 3 | 3 | 4 | 3 | 3 |
| | Short Side | 3 | 4 | 3 | 3 | 4 | 5 | 3 | 3 | 5 | 6 | 3 | 3 | 5 | 7 | 4 | 3 | 5 | 7 | 4 | 4 | 6 | 7 | 4 | 4 | 6 | 8 | 4 | 4 | 7 | 8 | 5 | 4 | 7 | 9 | 5 | 5 |
| 44" | Long Side | 4 | 5 | 3 | 3 | 4 | 5 | 3 | 3 | 4 | 5 | 3 | 3 | 4 | 5 | 3 | 3 | 4 | 5 | 3 | 3 | 4 | 5 | 3 | 3 | 4 | 5 | 3 | 3 | 4 | 5 | 3 | 3 | 4 | 5 | 3 | 3 |
| | Short Side | 3 | 4 | 3 | 3 | 4 | 5 | 3 | 3 | 5 | 6 | 3 | 3 | 6 | 7 | 4 | 4 | 6 | 7 | 4 | 4 | 6 | 8 | 5 | 4 | 7 | 8 | 5 | 4 | 7 | 9 | 5 | 5 | 8 | 10 | 6 | 5 |
| 44-1/4" | Long Side | 5 | 6 | 3 | 3 | 5 | 6 | 3 | 3 | 5 | 6 | 3 | 3 | 5 | 6 | 3 | 3 | 5 | 6 | 3 | 3 | 5 | 6 | 3 | 3 | 5 | 6 | 3 | 3 | 5 | 6 | 3 | 3 | 5 | 6 | 3 | 3 |
| | Short Side | 3 | 4 | 3 | 3 | 4 | 5 | 3 | 3 | 5 | 6 | 3 | 3 | 6 | 7 | 4 | 4 | 6 | 7 | 4 | 4 | 7 | 8 | 5 | 4 | 7 | 9 | 5 | 5 | 7 | 9 | 5 | 5 | 8 | 10 | 6 | 5 |
| 53-1/8" | Long Side | 5 | 7 | 4 | 4 | 6 | 7 | 4 | 4 | 6 | 7 | 4 | 4 | 6 | 7 | 4 | 4 | 6 | 7 | 4 | 4 | 6 | 7 | 4 | 4 | 6 | 7 | 4 | 4 | 6 | 7 | 4 | 4 | 6 | 7 | 4 | 4 |
| | Short Side | 3 | 4 | 3 | 3 | 4 | 5 | 3 | 3 | 5 | 6 | 3 | 3 | 6 | 7 | 4 | 4 | 6 | 7 | 4 | 4 | 7 | 8 | 5 | 4 | 7 | 9 | 5 | 5 | 8 | 10 | 5 | 5 | 8 | 11 | 6 | 5 |
| 58" | Long Side | 6 | 8 | 4 | 4 | 6 | 8 | 5 | 4 | 7 | 8 | 5 | 4 | 7 | 8 | 5 | 4 | 7 | 8 | 5 | 4 | 7 | 8 | 5 | 4 | 7 | 8 | 5 | 4 | 7 | 8 | 5 | 4 | 7 | 8 | 5 | 4 |
| | Short Side | 3 | 4 | 3 | 3 | 4 | 5 | 3 | 3 | 5 | 6 | 3 | 3 | 6 | 7 | 4 | 4 | 6 | 7 | 4 | 4 | 7 | 8 | 5 | 4 | 7 | 9 | 5 | 5 | 8 | 10 | 6 | 5 | 8 | 11 | 6 | 5 |
| 63" | Long Side | 7 | 9 | 5 | 4 | 7 | 9 | 5 | 5 | 7 | 9 | 5 | 5 | 8 | 10 | 5 | 5 | 8 | 10 | 5 | 5 | 8 | 10 | 6 | 5 | 8 | 10 | 6 | 5 | 8 | 10 | 6 | 5 | 7 | 9 | 5 | 5 |
| | Short Side | 3 | 4 | 3 | 3 | 4 | 5 | 3 | 3 | 5 | 6 | 3 | 3 | 6 | 7 | 4 | 4 | 6 | 7 | 4 | 4 | 7 | 8 | 5 | 4 | 7 | 9 | 5 | 5 | 8 | 10 | 6 | 5 | 8 | 11 | 6 | 5 |
| 66-13/16" | Long Side | 7 | 9 | 5 | 5 | 8 | 10 | 6 | 5 | 8 | 10 | 6 | 5 | 8 | 11 | 6 | 5 | 8 | 11 | 6 | 5 | 8 | 11 | 6 | 5 | 8 | 11 | 6 | 5 | 8 | 11 | 6 | 5 | 8 | 10 | 6 | 5 |
| | Short Side | 3 | 4 | 3 | 3 | 4 | 5 | 3 | 3 | 5 | 6 | 3 | 3 | 6 | 7 | 4 | 4 | 6 | 7 | 4 | 4 | 7 | 8 | 5 | 4 | 7 | 9 | 5 | 5 | 8 | 9 | 5 | 5 | 8 | 11 | 6 | 5 |
| 67-1/2" | Long Side | 8 | 10 | 5 | 5 | 8 | 10 | 6 | 5 | 8 | 10 | 6 | 5 | 8 | 11 | 6 | 5 | 8 | 11 | 6 | 5 | 8 | 11 | 6 | 5 | 8 | 11 | 6 | 5 | 8 | 11 | 6 | 5 | 8 | 11 | 6 | 5 |
| | Short Side | 3 | 4 | 3 | 3 | 4 | 5 | 3 | 3 | 5 | 6 | 3 | 3 | 6 | 7 | 4 | 4 | 6 | 7 | 4 | 4 | 7 | 8 | 5 | 4 | 7 | 9 | 5 | 4 | 7 | 9 | 5 | 5 | 8 | 11 | 6 | 5 |
| 68" | Long Side | 8 | 10 | 5 | 5 | 8 | 10 | 6 | 5 | 8 | 11 | 6 | 5 | 9 | 11 | 6 | 5 | 9 | 11 | 6 | 5 | 9 | 11 | 6 | 5 | 9 | 11 | 6 | 5 | 9 | 11 | 6 | 5 | | | | |
| | Short Side | 3 | 4 | 3 | 3 | 4 | 5 | 3 | 3 | 5 | 6 | 3 | 3 | 6 | 7 | 4 | 4 | 6 | 7 | 4 | 4 | 6 | 8 | 5 | 4 | 7 | 9 | 5 | 4 | 7 | 9 | 5 | 5 | | | | |
| 70" | Long Side | 8 | 10 | 6 | 5 | 8 | 11 | 6 | 5 | 9 | 11 | 6 | 6 | 9 | 11 | 6 | 6 | 9 | 11 | 6 | 6 | 9 | 11 | 6 | 6 | 9 | 11 | 6 | 6 | 9 | 11 | 6 | 6 | | | | |
| | Short Side | 3 | 4 | 3 | 3 | 4 | 5 | 3 | 3 | 5 | 6 | 3 | 3 | 6 | 7 | 4 | 4 | 6 | 7 | 4 | 4 | 6 | 8 | 5 | 4 | 7 | 8 | 5 | 4 | 7 | 9 | 5 | 5 | | | | |
| 72" | Long Side | 8 | 10 | 6 | 5 | 9 | 11 | 6 | 6 | 9 | 11 | 6 | 6 | 9 | 11 | 6 | 6 | 9 | 11 | 6 | 6 | 9 | 11 | 6 | 6 | 9 | 11 | 6 | 6 | 9 | 11 | 6 | 6 | | | | |
| | Short Side | 3 | 4 | 3 | 3 | 4 | 5 | 3 | 3 | 5 | 6 | 3 | 3 | 5 | 7 | 4 | 4 | 6 | 7 | 4 | 4 | 6 | 8 | 4 | 4 | 7 | 8 | 5 | 4 | 7 | 9 | 5 | 5 | | | | |
| 74" | Long Side | 9 | 11 | 6 | 5 | 9 | 11 | 6 | 6 | 9 | 12 | 7 | 6 | 9 | 12 | 7 | 6 | 9 | 12 | 7 | 6 | 9 | 12 | 7 | 6 | 9 | 12 | 7 | 6 | | | | | | | | |
| | Short Side | 3 | 4 | 3 | 3 | 4 | 5 | 3 | 3 | 5 | 6 | 3 | 3 | 5 | 7 | 4 | 4 | 6 | 7 | 4 | 4 | 6 | 8 | 4 | 4 | 6 | 8 | 5 | 4 | | | | | | | | |
| 76" | Long Side | 9 | 11 | 6 | 6 | 9 | 12 | 7 | 6 | 9 | 12 | 7 | 6 | 9 | 12 | 7 | 6 | 9 | 12 | 7 | 6 | 9 | 12 | 7 | 6 | 9 | 12 | 7 | 6 | | | | | | | | |
| | Short Side | 3 | 4 | 3 | 3 | 4 | 5 | 3 | 3 | 5 | 6 | 3 | 3 | 5 | 7 | 4 | 3 | 5 | 7 | 4 | 4 | 6 | 8 | 4 | 4 | 6 | 8 | 5 | 4 | | | | | | | | |
| 84" | Long Side | 10 | 13 | 7 | 6 | 10 | 13 | 7 | 7 | 10 | 13 | 7 | 7 | 10 | 13 | 7 | 7 | 10 | 13 | 7 | 7 | | | | | | | | | | | | | | | | |
| | Short Side | 3 | 4 | 3 | 3 | 4 | 5 | 3 | 3 | 5 | 6 | 3 | 3 | 5 | 6 | 4 | 3 | 5 | 6 | 4 | 3 | | | | | | | | | | | | | | | | |
| 114" | Long Side | 14 | 18 | 10 | 9 | | | | | | | | | | | | | | | | | | | | | | | | | | | | | | | | |
| | Short Side | 3 | 4 | 3 | 3 | | | | | | | | | | | | | | | | | | | | | | | | | | | | | | | | |

1) USE THIS TABLE FOR ALL WINDOWS PER THE ELEVATIONS ON SHEET 1. DIMENSIONS SHOWN ARE TIP-TO-TIP.

2) FOR SIZES NOT SHOWN, ROUND UP TO THE NEXT AVAILABLE SHORT OR LONG SIDE DIMENSION SHOWN ON THE TABLE.

3) THE WINDOW'S SHORT AND LONG SIDE MAY BE INVERTED.

4) SEE NEXT SHEET FOR ADDITIONAL INFORMATION.

PRODUCT REVISED
as complying with the Florida Building Code
Acceptance No 15-0519.16
Expiration Date April 11, 2018
By Manuel Perez
Miami Dade Product Control

EXAMPLE 1: FOR WINDOW COMBINATION SHOWN BELOW; 3/16" TEMPERED GLASS, 1/4" MASONRY ANCHORS INTO CONCRETE, +/- 55 PSF DP REQUIRED, NO ANCHOR PLATE

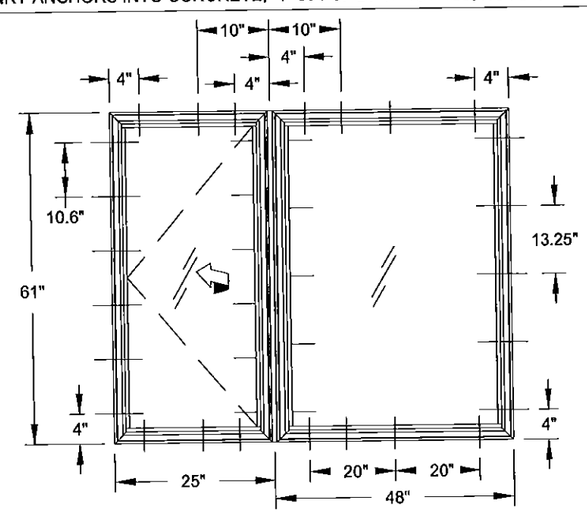


CASEMENT ANCHORS (**SEE SEPERATE NOA**):

A) FROM TABLE 12, ANCHORS C & D ALLOW A DP OF +70/-90.

B) FOR THE JAMB, FROM TABLE 3, ANCHOR TYPE C HAS THE ANCHOR AND SUBSTRATE DESIRED AND DOES NOT REQUIRE THE ANCHOR PLATE.

C) FROM TABLE 2, 6 ANCHORS ARE REQUIRED IN EACH JAMB.

D) SIMILARLY, 2 ANCHORS ARE REQUIRED IN THE HEAD & SILL.

E) DISTRIBUTE ANCHORS FOLLOWING GUIDELINES FROM ELEVATION ON SHEET 1.

F) PER RULES ON SHEETS 2 & 3, INSTALL 1 ADDITIONAL ANCHOR ON THE FRAME ASSEMBLY TUBE SIDE OF THE AWNING (HEAD & SILL).

FIXED CASEMENT ANCHORS:

A) FROM TABLE 11, ALL ANCHORS ALLOW A DP OF +70/-90.

B) FOR THE JAMB, FROM TABLE 3, ANCHOR TYPE C HAS THE ANCHOR AND SUBSTRATE DESIRED AND DOES NOT REQUIRE THE ANCHOR PLATE.

C) FROM TABLE 2B, 5 ANCHORS ARE REQUIRED IN EACH JAMB.

D) SIMILARLY, 3 ANCHORS ARE REQUIRED IN THE HEAD & SILL.

E) DISTRIBUTE ANCHORS FOLLOWING GUIDELINES FROM ELEVATION ON SHEET 1.

F) PER RULES ON SHEET 2, INSTALL 1 ADDITIONAL ANCHOR ON THE FRAME ASSEMBLY TUBE SIDE OF THE FIXED CASEMENT (HEAD & SILL).

Revised By: L MILLER
Revision A: NO CHANGE THIS SHEET
Date: 5/15/15
Drawn By: J ROSOWSKI
Date: 08/08/12
Description: ANCHOR TYPE AND QUANTITY
Title: FIXED CASEMENT WINDOW DETAILS - NI
Rev: A
Drawing No. MD-CA640F-NI
Scale: NTS
Sheet: 5 OF 10
Series/Model: CA-640


PGT®
1070 TECHNOLOGY DRIVE
N. VENICE, FL 34275
P.O. BOX 1529
NOKOMIS, FL 34274
CERT. OF AUTH. #29296


ANTHONY LYNN MILLER
LICENSE
No. 58705
5/16/15
STATE OF FLORIDA
PROFESSIONAL ENGINEER
A. LYNN MILLER, P.E.
P.E.# 58705

TABLE 4:

| Long Side \ Short Side | under 23" | 25-15/16" | 27-3/4" | 33-1/2" | 37" | 44" | 48-1/4" | 53-1/8" | 58" | 63" |
|---|---|---|---|---|---|---|---|---|---|---|
| | Design Pressure (psf) for Single Windows, All Anchor Groups | | | | | | | | | |
| under 23" | +/- 79.6 | +/- 71.5 | +/- 67.9 | +/- 60.6 | +/- 57.7 | +/- 53.9 | +/- 52.2 | +/- 49.9 | +/- 46.9 | +/- 44.5 |
| 25-15/16" | +/- 71.5 | +/- 70.5 | +/- 66.2 | +/- 57.6 | +/- 54.3 | +/- 50 | +/- 48.2 | +/- 43.8 | +/- 39.4 | +/- 36.2 |
| 37" | +/- 57.7 | +/- 54.3 | +/- 52.7 | +/- 49.9 | +/- 49.4 | +/- 42.7 | +/- 40.1 | +/- 38 | +/- 36.3 | +/- 33.2 |
| 44" | +/- 53.9 | +/- 50 | +/- 48.1 | +/- 44.1 | +/- 42.7 | +/- 41.6 | +/- 38.2 | | | |
| 48-1/4" | +/- 52.2 | +/- 48.2 | +/- 46.3 | +/- 41.8 | +/- 40.1 | +/- 38.2 | +/- 35.2 | | | |
| 53-1/8" | +/- 49.9 | +/- 43.8 | +/- 42.9 | +/- 39.9 | +/- 38 | | | | | |
| 58" | +/- 46.9 | +/- 39.4 | +/- 38.1 | +/- 37.9 | +/- 36.3 | | | | | |
| 63" | +/- 44.5 | +/- 36.2 | +/- 33.8 | +/- 33.6 | +/- 33.2 | | | | | |
| 76" | +/- 40.7 | +/- 30.8 | +/- 27.4 | | | | | | | |
| 84" | +/- 39.4 | +/- 29.3 | +/- 25.5 | | | | | | | |

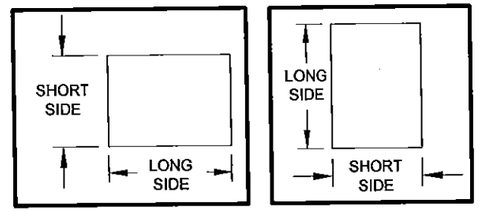


1) SEE SHEETS 1, 4 & 5 FOR WINDOW ANCHOR LOCATIONS AND QUANTITIES.
2) TABLE DIMENSIONS MAY BE ORIENTED VERTICALLY OR HORIZONTALLY AS SHOWN.

**FOR GLASS TYPES:**

1) 1/8" Annealed
2) 1/8" Tempered

PRODUCT REVISED
as complying with the Florida Building Code
Acceptance No 15-0519.16
Expiration Date April 11, 2018
By Manuel Perez
Miami Dade Product Control

TABLE 5:

| Window Dimension "B" \ Window Dimension "A" | under 23" | 25-15/16" | 27-3/4" | 33-1/2" | 37" | 44" | 48-1/4" | 53-1/8" | 58" | 63" | |
|---|---|---|---|---|---|---|---|---|---|---|---|
| | Design Pressure (psf) for Windows Attached to a Frame Assembly Tube | | | | | | | | | | |
| | Anchor Group | Anchor Group | Anchor Group | Anchor Group | Anchor Group | Anchor Group | Anchor Group | Anchor Group | Anchor Group | Anchor Group | |
| | All | All | All | All | All | All | All | All | All | A, C & D | B |
| under 23" | +70/-79.6 | +70/-71.5 | +/-67.9 | +/-60.6 | +/-57.7 | +/-53.9 | +/-52.2 | +/-49.9 | +/-46.9 | +/-44.5 | +/-43.6 |
| 25-15/16" | +70/-71.5 | +70/-70.5 | +/-66.2 | +/-57.6 | +/-54.3 | +/-50 | +/-48.2 | +/-43.8 | +/-39.4 | +/-36.2 | +/-36.2 |
| 37" | +/-57.7 | +/-54.3 | +/-52.7 | +/-49.9 | +/-49.4 | +/-42.7 | +/-40.1 | +/-38 | +/-36.3 | +/-33.2 | +/-33.2 |
| 44" | +/-53.9 | +/-50 | +/-48.1 | +/-44.1 | +/-42.7 | +/-41.6 | +/-38.2 | | | | |
| 48-1/4" | +/-52.2 | +/-48.2 | +/-46.3 | +/-41.8 | +/-40.1 | +/-38.2 | +/-35.2 | | | | |
| 53-1/8" | +/-49.9 | +/-43.8 | +/-42.9 | +/-39.9 | +/-38 | | | | | | |
| 58" | +/-46.9 | +/-39.4 | +/-38.1 | +/-37.9 | +/-36.3 | | | | | | |
| 63" | +/-44.5 | +/-36.2 | +/-33.8 | +/-33.6 | +/-33.2 | | | | | | |
| 76" | +/-40.7 | +/-30.8 | +/-27.4 | | | | | | | | |
| 84" | +/-39.4 | +/-29.3 | +/-25.5 | | | | | | | | |

1) THE WINDOW'S WIDTH AND HEIGHT MAY BE INVERTED.

FIGURE FOR VERTICAL FRAME ASSEMBLY TUBE

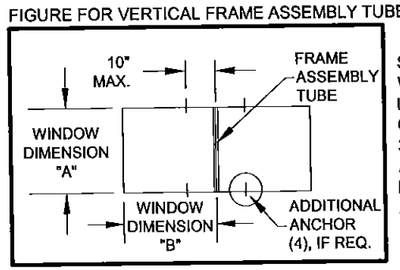


SEE SHEETS 1, 4 & 5 FOR WINDOW ANCHOR LOCATIONS AND QUANTITIES. SEE SHEET 3 FOR ANY ADDITIONAL ANCHORS REQUIRED FOR THE FRAME ASSEMBLY TUBE.

FIGURE FOR HORIZONTAL FRAME ASSEMBLY TUBE

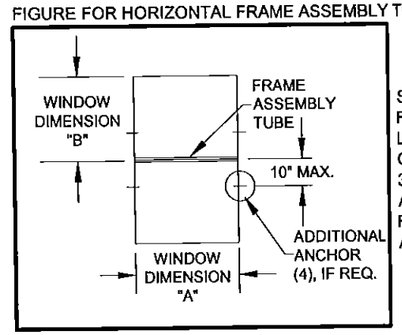


SEE SHEETS 1, 4 & 5 FOR WINDOW ANCHOR LOCATIONS AND QUANTITIES. SEE SHEET 3 FOR ANY ADDITIONAL ANCHORS REQUIRED FOR THE FRAME ASSEMBLY TUBE.

SEE SHEET 4 FOR ADDITIONAL SAMPLE CONFIGURATIONS

Revised By: L MILLER — Date: 5/15/15 — Revision A: NO CHANGE THIS SHEET
Drawn By: J ROSOWSKI — Date: 08/08/12
Description: DESIGN PRESSURES PER GLAZING TYPE
Title: FIXED CASEMENT WINDOW DETAILS - NI
Series/Model: CA-640 — Scale: NTS — Sheet: 6 OF 10 — Drawing No. MD-CA640F-NI — Rev: A

1070 TECHNOLOGY DRIVE
N. VENICE, FL 34275
P.O. BOX 1529
NOKOMIS, FL 34274
CERT. OF AUTH. #29296

ANTHONY LYNN MILLER
LICENSE
No. 58705
5/16/15
STATE OF FLORIDA
PROFESSIONAL ENGINEER
A. LYNN MILLER, P.E.
P.E.# 58705

| FOR GLASS TYPES: |
|---|
| 3) 3/16" Annealed |
| 5) 1/4" Annealed |
| 7) 9/16" IG: (1/8" An - 5/16" Air - 1/8" An) |
| 8) 9/16" IG: (1/8" T - 5/16" Air - 1/8" T) |

PRODUCT REVISED
as complying with the Florida
Building Code
Acceptance No 15-0519.06
Expiration Date April 11, 2018
By Miami Dade Product Control

TABLE 6:

| Long Side | Design Pressure (psf) for Single Windows, All Anchor Groups — Short Side: under 23" | 25-15/16" | 27-3/4" | 33-1/2" | 37" | 44" | 48-1/4" | 53-1/8" | 58" | 63" |
|---|---|---|---|---|---|---|---|---|---|---|
| under 23" | +90/-112.1 | +90/-100.7 | +90/-95.7 | +/- 85.4 | +/- 81.3 | +/- 75.9 | +/- 73.6 | +/- 71.6 | +/- 69.9 | +/- 68.6 |
| 25-15/16" | +90/-100.7 | +90/-99.4 | +90/-93.3 | +/- 81.1 | +/- 76.5 | +/- 70.4 | +/- 67.9 | +/- 65.8 | +/- 64 | +/- 62.6 |
| 37" | +/- 81.3 | +/- 76.5 | +/- 74.3 | +/- 70.3 | +/- 69.7 | +/- 60.1 | +/- 56.5 | +/- 53.5 | +/- 51.1 | +/- 49.3 |
| 44" | +/- 75.9 | +/- 70.4 | +/- 67.8 | +/- 62.1 | +/- 60.1 | +/- 58.6 | +/- 53.8 | +/- 44.5 | +/- 41.9 | +/- 40 |
| 48-1/4" | +/- 73.6 | +/- 67.9 | +/- 65.2 | +/- 58.9 | +/- 56.5 | +/- 53.8 | +/- 53.4 | +/- 43.5 | +/- 40.6 | |
| 53-1/8" | +/- 71.6 | +/- 65.8 | +/- 62.9 | +/- 56.2 | +/- 53.5 | +/- 44.5 | +/- 43.5 | +/- 43.2 | | |
| 58" | +/- 69.9 | +/- 64 | +/- 61 | +/- 54.1 | +/- 51.1 | +/- 41.9 | +/- 40.6 | | | |
| 63" | +/- 68.6 | +/- 62.6 | +/- 59.6 | +/- 52.4 | +/- 49.3 | +/- 40 | | | | |
| 76" | +/- 66 | +/- 55.4 | +/- 49.3 | +/- 43.1 | +/- 39.4 | | | | | |
| 84" | +/- 64.9 | +/- 52.7 | +/- 45.8 | +/- 37.8 | | | | | | |

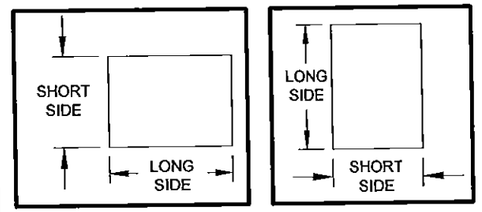


1) SEE SHEETS 1, 4 & 5 FOR WINDOW ANCHOR LOCATIONS AND QUANTITIES.
2) TABLE DIMENSIONS MAY BE ORIENTED VERTICALLY OR HORIZONTALLY AS SHOWN.

TABLE 7:

| Window Dimension "B" | Design Pressure (psf) for Windows Attached to a Frame Assembly Tube — Window Dimension "A": under 23" Anchor Group All | 25-15/16" Anchor Group All | 27-3/4" Anchor Group All | 33-1/2" Anchor Group A, C & D | 33-1/2" B | 37" Anchor Group A, C & D | 37" B | 44" Anchor Group A, C & D | 44" B | 48-1/4" Anchor Group A | 48-1/4" B | 48-1/4" C & D | 53-1/8" Anchor Group A | 53-1/8" B | 53-1/8" C & D | 58" Anchor Group A | 58" B | 58" C & D | 63" Anchor Group A | 63" B | 63" C & D |
|---|---|---|---|---|---|---|---|---|---|---|---|---|---|---|---|---|---|---|---|---|---|
| under 23" | +70/-90 | +70/-90 | +70/-90 | +70/-85.4 | +70/-82.1 | +70/-81.3 | +70/-74.3 | +70/-75.9 | +/-62.5 | +70/-72.7 | +/-56.9 | +70/-73.6 | +/-66.1 | +/-51.8 | +70/-71.6 | +/-60.5 | +/-47.4 | +/-69.9 | +/-55.7 | +/-43.6 | +/-68.6 |
| 25-15/16" | +70/-90 | +70/-90 | +70/-90 | +70/-81.1 | +70/-81.1 | +70/-76.5 | +70/-76.5 | +70/-70.4 | +70/-70.4 | +/-64.4 | +/-67.9 | +/-67.9 | +/-58.6 | +/-65.8 | +/-65.8 | +/-53.6 | +/-64 | +/-64 | +/-49.3 | +/-62.6 | +/-62.6 |
| 37" | +70/-81.3 | +70/-76.5 | +70/-74.3 | +70/-70.3 | +70/-70.3 | +/-69.7 | +/-69.7 | +/-60.1 | +/-60.1 | +/-56.5 | +/-56.5 | +/-56.5 | +/-53.5 | +/-53.5 | +/-53.5 | +/-51.1 | +/-51.1 | +/-51.1 | +/-49.3 | +/-49.3 | +/-49.3 |
| 44" | +70/-75.9 | +70/-70.4 | +/-67.8 | +/-62.1 | +/-62.1 | +/-60.1 | +/-60.1 | +/-58.6 | +/-58.6 | +/-53.8 | +/-53.8 | +/-53.8 | +/-44.5 | +/-44.5 | +/-44.5 | +/-41.9 | +/-41.9 | +/-41.9 | +/-40 | +/-40 | +/-40 |
| 48-1/4" | +70/-73.6 | +/-67.9 | +/-65.2 | +/-58.9 | +/-58.9 | +/-56.5 | +/-56.5 | +/-53.8 | +/-53.8 | +/-53.4 | +/-53.4 | +/-53.4 | +/-43.5 | +/-43.5 | +/-43.5 | +/-40.6 | +/-40.6 | +/-40.6 | | | |
| 53-1/8" | +70/-71.6 | +/-65.8 | +/-62.9 | +/-56.2 | +/-56.2 | +/-53.5 | +/-53.5 | +/-44.5 | +/-44.5 | +/-43.5 | +/-43.5 | +/-43.5 | +/-43.2 | +/-43.2 | +/-43.2 | | | | | | |
| 58" | +/-69.9 | +/-64 | +/-61 | +/-54.1 | +/-54.1 | +/-51.1 | +/-51.1 | +/-41.9 | +/-41.9 | +/-40.6 | +/-40.6 | +/-40.6 | | | | | | | | | |
| 63" | +/-68.6 | +/-62.6 | +/-59.6 | +/-52.4 | +/-52.4 | +/-49.3 | +/-49.3 | +/-40 | +/-40 | | | | | | | | | | | | |
| 76" | +/-66 | +/-55.4 | +/-49.3 | +/-43.1 | +/-43.1 | +/-39.4 | +/-39.4 | | | | | | | | | | | | | | |
| 84" | +/-64.9 | +/-52.7 | +/-45.8 | +/-37.8 | +/-37.8 | | | | | | | | | | | | | | | | |

1) THE WINDOW'S WIDTH AND HEIGHT MAY BE INVERTED.

FIGURE FOR VERTICAL FRAME ASSEMBLY TUBE

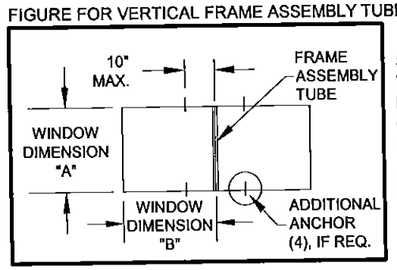


SEE SHEETS 1, 4 & 5 FOR WINDOW ANCHOR LOCATIONS AND QUANTITIES. SEE SHEET 3 FOR ANY ADDITIONAL ANCHORS REQUIRED FOR THE FRAME ASSEMBLY TUBE.

FIGURE FOR HORIZONTAL FRAME ASSEMBLY TUBE

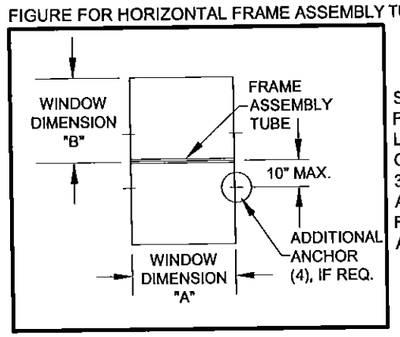


SEE SHEETS 1, 4 & 5 FOR WINDOW ANCHOR LOCATIONS AND QUANTITIES. SEE SHEET 3 FOR ANY ADDITIONAL ANCHORS REQUIRED FOR THE FRAME ASSEMBLY TUBE.

SEE SHEET 4 FOR ADDITIONAL SAMPLE CONFIGURATIONS

Revised By: L MILLER
Date: 5/15/15
Revision A: NO CHANGE THIS SHEET
Drawn By: J ROSOWSKI
Date: 08/08/12
Description: DESIGN PRESSURES PER GLAZING TYPE
Title: FIXED CASEMENT WINDOW DETAILS - NI
Scale: NTS
Sheet: 7 OF 10
Drawing No. MD-CA640F-NI
Rev: A
Series/Model: CA-640


1070 TECHNOLOGY DRIVE
N. VENICE, FL 34275
P.O. BOX 1529
NOKOMIS, FL 34274
CERT. OF AUTH. #29296


ANTHONY LYNN MILLER
LICENSE
No. 58705
STATE OF FLORIDA
PROFESSIONAL ENGINEER
5/16/15
A. LYNN MILLER, P.E.
P.E.# 58705

## FOR GLASS TYPES:

9) 7/8" IG: (3/16" An - 1/2" Air - 3/16" An)

PRODUCT REVISED
as complying with the Florida Building Code
Acceptance No 15-0519.16
Expiration Date April 11, 2018
By Manuel Perez
Miami Dade Product Control

TABLE 8:

| | | Design Pressure (psf) for Single Windows, All Anchor Groups | | | | | | | | | |
|---|---|---|---|---|---|---|---|---|---|---|---|
| | | Short Side | | | | | | | | | |
| | | under 23" | 25-15/16" | 36" | 48" | 53-1/8" | 58" | 60" | 63" | 65" | 66-13/16" |
| Long Side | under 23" | +90/-150 | +90/-150 | +90/-139.3 | +90/-124.7 | +90/-121 | +90/-118.3 | +90/-117.3 | +90/-116 | +90/-115.2 | +90/-114.5 |
| | 25-15/16" | +90/-150 | +90/-150 | +90/-131.4 | +90/-115.2 | +90/-111.2 | +90/-108.2 | +90/-107.2 | +90/-105.8 | +90/-105 | +90/-104.3 |
| | 35" | +90/-141.2 | +90/-133.5 | +90/-121.2 | +90/-98 | +90/-92.9 | +/- 89.2 | +/- 87.9 | +/- 86.2 | +/- 85.2 | +/- 84.4 |
| | 63" | +90/-116 | +90/-105.8 | +/- 84.8 | +/- 73.4 | +/- 70.9 | +/- 69.6 | +/- 69.4 | +/- 69 | +/- 67.1 | +/- 65.2 |
| | 66-13/16" | +90/-114.5 | +90/-104.3 | +/- 82.9 | +/- 70.9 | +/- 68.1 | +/- 66.4 | +/- 65.9 | +/- 65.2 | +/- 63.5 | +/- 62 |
| | 68" | +90/-114.1 | +90/-103.8 | +/- 82.4 | +/- 70.2 | +/- 67.3 | +/- 65.5 | +/- 65 | +/- 64.2 | +/- 62.4 | |
| | 70" | +90/-113.4 | +90/-103.2 | +/- 79.9 | +/- 69.1 | +/- 66.1 | +/- 64.2 | +/- 63.6 | +/- 62.4 | | |
| | 74" | +90/-112.3 | +90/-101.9 | +/- 73.9 | +/- 67.2 | +/- 64 | +/- 61.8 | +/- 61.1 | | | |
| | 76" | +90/-111.7 | +90/-101.3 | +/- 72.1 | +/- 66.4 | +/- 63.1 | +/- 60.8 | | | | |
| | 84" | +90/-109.9 | +90/-99.4 | +/- 65.5 | +/- 58.9 | +/- 57.7 | | | | | |

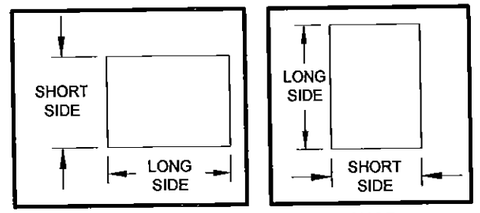


1) SEE SHEETS 1, 4 & 5 FOR WINDOW ANCHOR LOCATIONS AND QUANTITIES.
2) TABLE DIMENSIONS MAY BE ORIENTED VERTICALLY OR HORIZONTALLY AS SHOWN.

TABLE 9:

| | | Design Pressure (psf) for Windows Attached to a Frame Assembly Tube | | | | | | | | | | | | | | | | | | | | | |
|---|---|---|---|---|---|---|---|---|---|---|---|---|---|---|---|---|---|---|---|---|---|---|---|
| | | Window Dimension "A" | | | | | | | | | | | | | | | | | | | | | |
| | | under 23" | 25-15/16" | 36" | | 48" | | | 53-1/8" | | | 58" | | | | 60" | | | | 63" | | | |
| | | Anchor Group | Anchor Group | Anchor Group | | Anchor Group | | | Anchor Group | | | Anchor Group | | | | Anchor Group | | | | Anchor Group | | | |
| | | All | All | A, C & D | B | A | B | C & D | A | B | C & D | A | B | C | D | A | B | C | D | A | B | C | D |
| Window Dimension "B" | under 23" | +70/-90 | +70/-90 | +70/-90 | +70/-76.3 | +70/-73.1 | +/-57.3 | +70/-90 | +/-66 | +/-51.7 | +70/-90 | +/-60.5 | +/-47.4 | +70/-87.6 | +70/-90 | +/-58.5 | +/-45.8 | +70/-84.7 | +70/-90 | +/-55.7 | +/-43.6 | +70/-80.7 | +70/-89.5 |
| | 25-15/16" | +70/-90 | +70/-90 | +70/-86.4 | +70/-90 | +/-64.8 | +70/-90 | +70/-90 | +/-58.5 | +70/-90 | +70/-90 | +/-53.6 | +70/-84 | +70/-90 | +70/-90 | +/-51.8 | +70/-81.2 | +70/-90 | +70/-90 | +/-49.3 | +70/-77.3 | +70/-90 | +70/-90 |
| | 35" | +70/-90 | +70/-90 | +70/-90 | +70/-90 | +70/-90 | +70/-90 | +70/-90 | +70/-90 | +70/-84.9 | +70/-90 | +70/-89.2 | +70/-77.8 | +70/-89.2 | +70/-89.2 | +70/-87.9 | +70/-75.2 | +70/-87.9 | +70/-87.9 | +70/-86.2 | +70/-71.6 | +70/-86.2 | +70/-86.2 |
| | 63" | +70/-90 | +70/-90 | +70/-84.8 | +70/-84.8 | +70/-73.4 | +70/-73.1 | +70/-73.4 | +70/-70.9 | +/-66.1 | +70/-70.9 | +/-66.2 | +/-60.5 | +/-69.6 | +/-69.6 | +/-64 | +/-58.5 | +/-69.4 | +/-69.4 | +/-61 | +/-55.7 | +/-69 | +/-69 |
| | 66-13/16" | +70/-90 | +70/-90 | +70/-82.9 | +70/-82.9 | +70/-70.9 | +/-69 | +70/-70.9 | +/-68.1 | +/-62.3 | +/-68.1 | +/-66.4 | +/-57.1 | +/-66.4 | +/-66.4 | +/-65.9 | +/-55.2 | +/-65.9 | +/-65.9 | +/-65.2 | +/-52.5 | +/-65.2 | +/-65.2 |
| | 68" | +70/-90 | +70/-90 | +70/-82.4 | +70/-82.4 | +70/-70.2 | +/-67.8 | +70/-70.2 | +/-67.3 | +/-61.2 | +/-67.3 | +/-65.5 | +/-56.1 | +/-65.5 | +/-65.5 | +/-65 | +/-54.2 | +/-65 | +/-65 | +/-64.2 | +/-51.6 | +/-64.2 | +/-64.2 |
| | 70" | +70/-90 | +70/-90 | +70/-79.9 | +70/-79.9 | +/-69.1 | +/-65.8 | +/-69.1 | +/-66.1 | +/-59.5 | +/-66.1 | +/-64.2 | +/-54.5 | +/-64.2 | +/-64.2 | +/-63.6 | +/-52.7 | +/-63.6 | +/-63.6 | +/-62.4 | +/-50.1 | +/-62.4 | +/-62.4 |
| | 74" | +70/-90 | +70/-90 | +70/-73.9 | +70/-73.9 | +/-67.2 | +/-67.2 | +/-67.2 | +/-64 | +/-64 | +/-64 | +/-61.8 | +/-58.9 | +/-61.8 | +/-61.8 | +/-61.1 | +/-56.9 | +/-61.1 | +/-61.1 | | | | |
| | 76" | +70/-90 | +70/-90 | +70/-72.1 | +70/-72.1 | +/-66.4 | +/-66.4 | +/-66.4 | +/-63.1 | +/-62.6 | +/-63.1 | +/-60.8 | +/-57.3 | +/-60.8 | +/-60.8 | | | | | | | | |
| | 84" | +70/-90 | +70/-90 | +/-65.5 | +/-65.5 | +/-58.9 | +/-58.9 | +/-58.9 | +/-57.7 | +/-56.6 | +/-57.7 | | | | | | | | | | | | |

1) THE WINDOW'S WIDTH AND HEIGHT MAY BE INVERTED.

FIGURE FOR VERTICAL FRAME ASSEMBLY TUBE

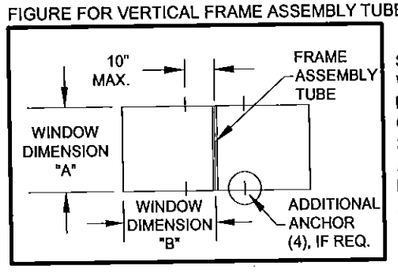


SEE SHEETS 1, 4 & 5 FOR WINDOW ANCHOR LOCATIONS AND QUANTITIES. SEE SHEET 3 FOR ANY ADDITIONAL ANCHORS REQUIRED FOR THE FRAME ASSEMBLY TUBE.

FIGURE FOR HORIZONTAL FRAME ASSEMBLY TUBE

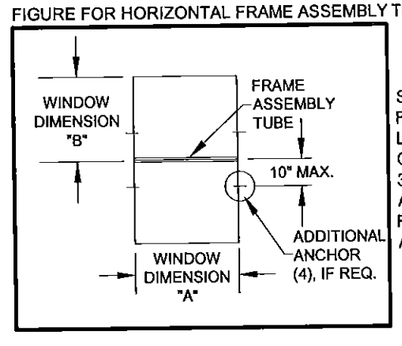


SEE SHEETS 1, 4 & 5 FOR WINDOW ANCHOR LOCATIONS AND QUANTITIES. SEE SHEET 3 FOR ANY ADDITIONAL ANCHORS REQUIRED FOR THE FRAME ASSEMBLY TUBE.

SEE SHEET 4 FOR ADDITIONAL SAMPLE CONFIGURATIONS

Revision A: NO CHANGE THIS SHEET
Revised By: L MILLER — Date: 5/15/15
Drawn By: J ROSOWSKI — Date: 08/08/12
Description: DESIGN PRESSURES PER GLAZING TYPE
Title: FIXED CASEMENT WINDOW DETAILS - NI
Series/Model: CA-640
Scale: NTS — Sheet: 8 OF 10
Drawing No. MD-CA640F-NI — Rev: A

1070 TECHNOLOGY DRIVE
N. VENICE, FL 34275
P.O. BOX 1529
NOKOMIS, FL 34274
CERT. OF AUTH. #29296

ANTHONY LYNN MILLER
LICENSE
No. 58705
STATE OF FLORIDA
PROFESSIONAL ENGINEER
5/11/15
A. LYNN MILLER, P.E.
P.E.#58705

## FOR GLASS TYPES:

4) 3/16" T
6) 1/4" T
10) 7/8" IG: (3/16" T - 1/2" Air - 3/16" T)

PRODUCT REVISED
as complying with the Florida
Building Code
Acceptance No 15-0519.16
Expiration Date Apr. 11, 2018
By
Miami-Dade Product Control

TABLE 10:

| Long Side \ Short Side | under 23" | 25-15/16" | 29" | 31-1/2" | 34" | 40" | 54" | 60" | 63" | 67-1/2" |
|---|---|---|---|---|---|---|---|---|---|---|
| | Design Pressure (psf) for Single Windows, All Anchor Groups | | | | | | | | | |
| under 23" | +90/-150 | +90/-150 | +90/-150 | +90/-150 | +90/-150 | +90/-150 | +90/-150 | +90/-150 | +90/-150 | +90/-150 |
| 25-15/16" | +90/-150 | +90/-150 | +90/-150 | +90/-150 | +90/-150 | +90/-150 | +90/-150 | +90/-150 | +90/-150 | +90/-150 |
| 63" | +90/-150 | +90/-150 | +90/-150 | +90/-150 | +90/-150 | +90/-150 | +90/-150 | +90/-150 | +90/-150 | +90/-141.7 |
| 67-1/2" | +90/-150 | +90/-150 | +90/-150 | +90/-150 | +90/-150 | +90/-150 | +90/-147 | +90/-142.9 | +90/-141.7 | +90/-134.5 |
| 72" | +90/-150 | +90/-150 | +90/-150 | +90/-150 | +90/-150 | +90/-150 | +90/-141.1 | +90/-136.1 | +90/-134.4 | |
| 76" | +90/-150 | +90/-150 | +90/-150 | +90/-150 | +90/-150 | +90/-150 | +90/-138.8 | +90/-131.2 | | |
| 84" | +90/-150 | +90/-150 | +90/-150 | +90/-150 | +90/-150 | +90/-133.4 | +90/-127.2 | | | |
| 114" | +90/-150 | +90/-150 | +90/-150 | +90/-150 | +90/-131.9 | +90/-96.6 | | | | |
| 134" | +90/-150 | +90/-150 | +90/-150 | +90/-150 | +90/-124.1 | | | | | |
| 145" | +90/-150 | +90/-150 | +90/-150 | +90/-149 | | | | | | |

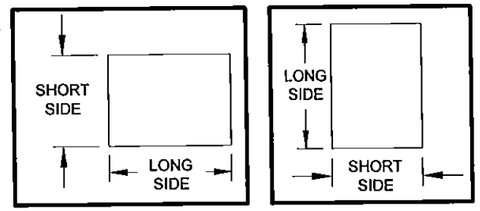


1) SEE SHEETS 1, 4 & 5 FOR WINDOW ANCHOR LOCATIONS AND QUANTITIES.
2) TABLE DIMENSIONS MAY BE ORIENTED VERTICALLY OR HORIZONTALLY AS SHOWN.

TABLE 11:

| Window Dimension "B" \ Window Dimension "A" | under 23" | 25-15/16" | 29" | 31-1/2" | | 34" | | 40" | | | 54" | | | 60" | | | | 63" | | | |
|---|---|---|---|---|---|---|---|---|---|---|---|---|---|---|---|---|---|---|---|---|---|
| | Design Pressure (psf) for Windows Attached to a Frame Assembly Tube | | | | | | | | | | | | | | | | | | | | |
| | Anchor Group | Anchor Group | Anchor Group | Anchor Group | | Anchor Group | | Anchor Group | | | Anchor Group | | | Anchor Group | | | | Anchor Group | | | |
| | All | All | All | A, C & D | B | A, C & D | B | A | B | C & D | A | B | C & D | A | B | C | D | A | B | C | D |
| under 23" | +70/-90 | +70/-90 | +70/-90 | +70/-90 | +70/-87.4 | +70/-90 | +70/-80.8 | +70/-87.7 | +/-68.7 | +70/-90 | +/-65 | +/-50.9 | +70/-90 | +/-58.5 | +/-45.8 | +70/-84.7 | +70/-90 | +/-55.7 | +/-43.6 | +70/-80.7 | +70/-89.5 |
| 25-15/16" | +70/-90 | +70/-90 | +70/-90 | +70/-90 | +70/-90 | +70/-90 | +70/-90 | +70/-77.7 | +70/-90 | +70/-90 | +/-57.6 | +70/-90 | +70/-90 | +/-51.8 | +70/-81.2 | +70/-90 | +70/-90 | +/-49.3 | +70/-77.3 | +70/-90 | +70/-90 |
| 63" | +70/-90 | +70/-90 | +70/-90 | +70/-90 | +70/-90 | +70/-90 | +70/-90 | +70/-90 | +70/-90 | +70/-90 | +70/-90 | +70/-90 | +70/-90 | +70/-90 | +70/-90 | +70/-90 | +70/-90 | +70/-90 | +70/-90 | +70/-90 | +70/-90 |
| 67-1/2" | +70/-90 | +70/-90 | +70/-90 | +70/-90 | +70/-90 | +70/-90 | +70/-90 | +70/-90 | +70/-90 | +70/-90 | +70/-90 | +70/-90 | +70/-90 | +70/-90 | +70/-90 | +70/-90 | +70/-90 | +70/-90 | +70/-90 | +70/-90 | +70/-90 |
| 72" | +70/-90 | +70/-90 | +70/-90 | +70/-90 | +70/-90 | +70/-90 | +70/-90 | +70/-90 | +70/-90 | +70/-90 | +70/-90 | +70/-90 | +70/-90 | +70/-90 | +70/-90 | +70/-90 | +70/-90 | +70/-90 | +70/-90 | +70/-90 | +70/-90 |
| 76" | +70/-90 | +70/-90 | +70/-90 | +70/-90 | +70/-90 | +70/-90 | +70/-90 | +70/-90 | +70/-90 | +70/-90 | +70/-90 | +70/-90 | +70/-90 | +70/-90 | +70/-90 | +70/-90 | +70/-90 | | | | |
| 84" | +70/-90 | +70/-90 | +70/-90 | +70/-90 | +70/-90 | +70/-90 | +70/-90 | +70/-90 | +70/-90 | +70/-90 | +70/-90 | +70/-90 | +70/-90 | | | | | | | | |
| 114" | +70/-90 | +70/-90 | +70/-90 | +70/-90 | +70/-90 | +70/-90 | +70/-90 | +70/-90 | +70/-90 | +70/-90 | | | | | | | | | | | |
| 134" | +70/-90 | +70/-90 | +70/-90 | +70/-90 | +70/-90 | +70/-90 | +70/-90 | | | | | | | | | | | | | | |
| 145" | +70/-90 | +70/-90 | +70/-90 | +70/-90 | +70/-90 | | | | | | | | | | | | | | | | |

1) THE WINDOW'S WIDTH AND HEIGHT MAY BE INVERTED.

FIGURE FOR VERTICAL FRAME ASSEMBLY TUBE

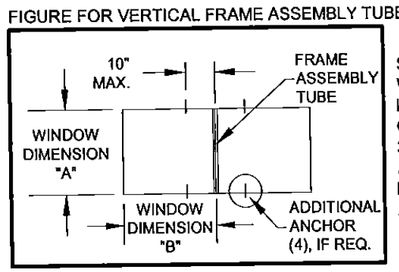


SEE SHEETS 1, 4 & 5 FOR WINDOW ANCHOR LOCATIONS AND QUANTITIES. SEE SHEET 3 FOR ANY ADDITIONAL ANCHORS REQUIRED FOR THE FRAME ASSEMBLY TUBE.

FIGURE FOR HORIZONTAL FRAME ASSEMBLY TUBE

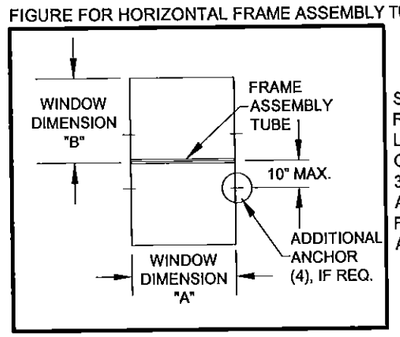


SEE SHEETS 1, 4 & 5 FOR WINDOW ANCHOR LOCATIONS AND QUANTITIES. SEE SHEET 3 FOR ANY ADDITIONAL ANCHORS REQUIRED FOR THE FRAME ASSEMBLY TUBE.

SEE SHEET 4 FOR ADDITIONAL SAMPLE CONFIGURATIONS

Revision A: NO CHANGE THIS SHEET
Revised By: L MILLER — Date: 5/15/15
Drawn By: J ROSOWSKI — Date: 08/08/12
Description: DESIGN PRESSURES PER GLAZING TYPE
Title: FIXED CASEMENT WINDOW DETAILS - NI
Series/Model: CA-640
Scale: NTS
Sheet: 9 OF 10
Drawing No. MD-CA640F-NI
Rev: A

1070 TECHNOLOGY DRIVE
N. VENICE, FL 34275
P.O. BOX 1529
NOKOMIS, FL 34274
CERT. OF AUTH. #29296

ANTHONY LYNN MILLER
LICENSE
No. 58705
STATE OF FLORIDA
PROFESSIONAL ENGINEER
5/6/15
A. LYNN MILLER, P.E.
P.E.# 58705

## ASSEMBLY DETAILS

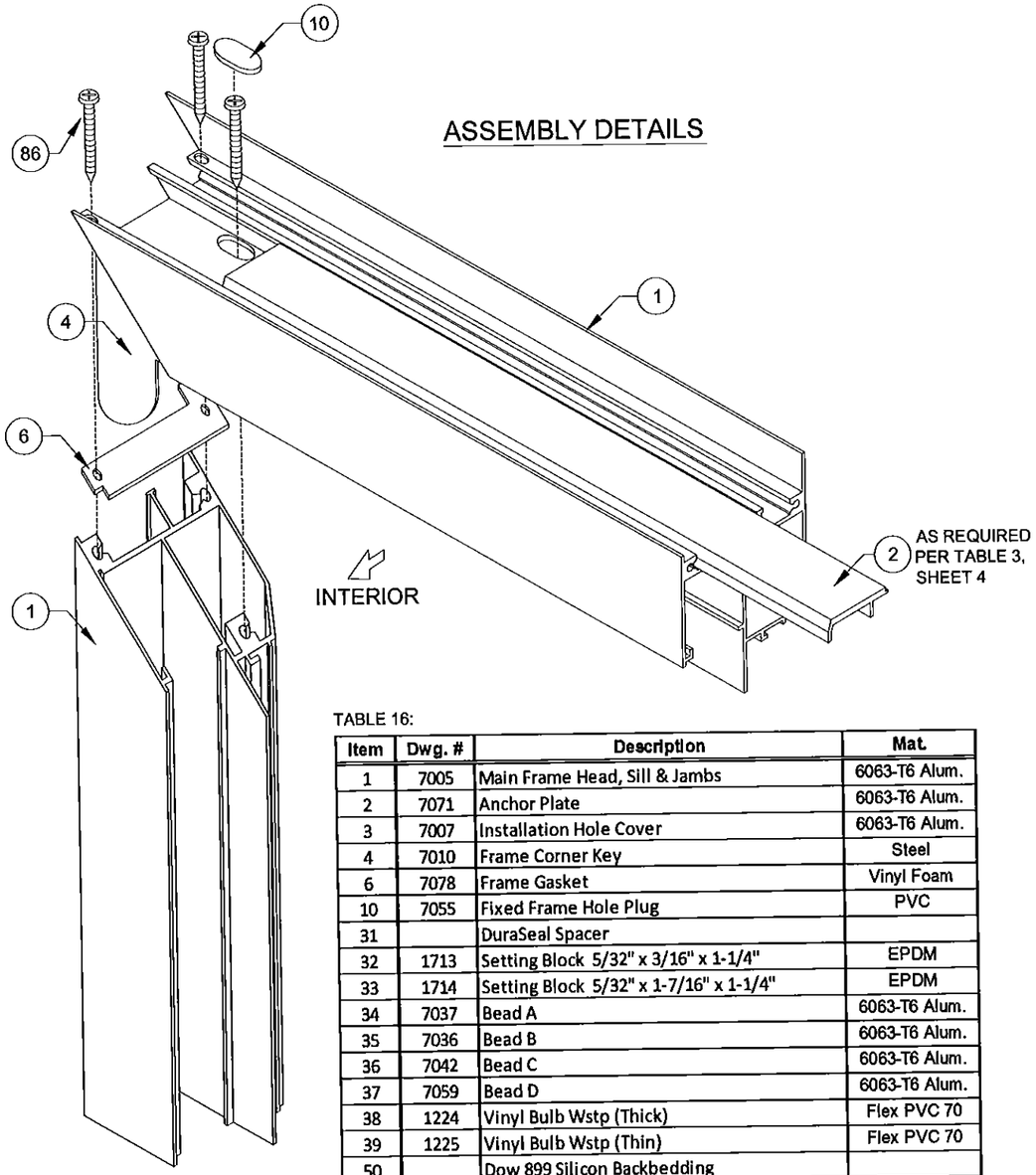


TABLE 16:

| Item | Dwg. # | Description | Mat. |
|---|---|---|---|
| 1 | 7005 | Main Frame Head, Sill & Jambs | 6063-T6 Alum. |
| 2 | 7071 | Anchor Plate | 6063-T6 Alum. |
| 3 | 7007 | Installation Hole Cover | 6063-T6 Alum. |
| 4 | 7010 | Frame Corner Key | Steel |
| 6 | 7078 | Frame Gasket | Vinyl Foam |
| 10 | 7055 | Fixed Frame Hole Plug | PVC |
| 31 | | DuraSeal Spacer | |
| 32 | 1713 | Setting Block 5/32" x 3/16" x 1-1/4" | EPDM |
| 33 | 1714 | Setting Block 5/32" x 1-7/16" x 1-1/4" | EPDM |
| 34 | 7037 | Bead A | 6063-T6 Alum. |
| 35 | 7036 | Bead B | 6063-T6 Alum. |
| 36 | 7042 | Bead C | 6063-T6 Alum. |
| 37 | 7059 | Bead D | 6063-T6 Alum. |
| 38 | 1224 | Vinyl Bulb Wstp (Thick) | Flex PVC 70 |
| 39 | 1225 | Vinyl Bulb Wstp (Thin) | Flex PVC 70 |
| 50 | | Dow 899 Silicon Backbedding | |
| 70 | 134 | Add-on Flange | 6063-T6 Alum. |
| 71 | 7004 | Casement Frame Assy Tube | 6063-T6 Alum. |
| 86 | | #8 X 1-1/2" Quad Pn SMS Stainless Steel | Stainless Steel |
| 90 | | #12 x 1" Ph. Pn. TEK | Stainless Steel |

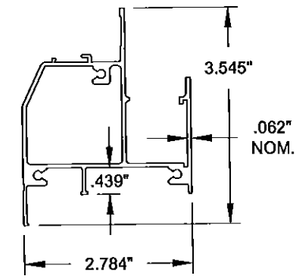


1 FRAME HEAD, SILL & JAMB
#7005, 6063-T6

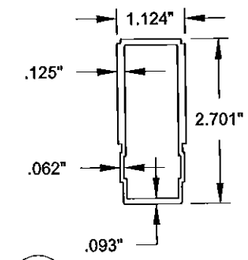


71 FRAME ASSEMBLY TUBE
#7004, 6063-T6

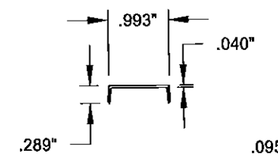


3 INST. HOLE COVER
#7007, 6063-T6

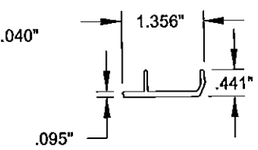


2 ANCHOR PLATE
#7071, 6063-T6

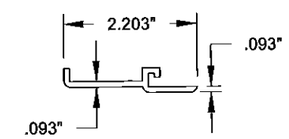


70 ADDON FLANGE
#134, 6063-T6

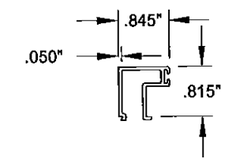


34 BEAD A
#7037, 6063-T6

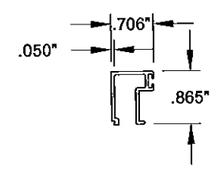


35 BEAD B
#7036, 6063-T6

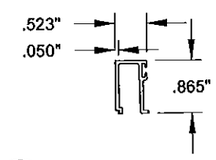


36 BEAD C
#7042, 6063-T6

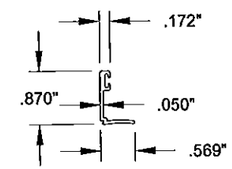


37 BEAD D
#7059, 6063-T6

PRODUCT REVISED
as complying with the Florida Building Code
Acceptance No 15-0519.16
Expiration Date April 11, 2018
By Manuel Perez
Miami Dade Product Control

ANTHONY LYNN MILLER
LICENSE
No. 58705
STATE OF FLORIDA
PROFESSIONAL ENGINEER
5/16/15
A. LYNN MILLER, P.E.
P.E.# 58705

PGT®

1070 TECHNOLOGY DRIVE
N. VENICE, FL 34275
P.O. BOX 1529
NOKOMIS, FL 34274

CERT. OF AUTH. #29296

| Revised By: | Date: | Revision B: |
|---|---|---|
| | | |
| Revised By: LM | Date: 5/15/15 | Revision A: NO CHANGE THIS SHEET |

Description: BOM AND EXTRUSIONS

Drawn By: J ROSOWSKI

Title: FIXED CASEMENT WINDOW DETAILS - NI

Date: 08/08/12

| Series/Model: | Scale: | Sheet: | Drawing No. | Rev: |
|---|---|---|---|---|
| CA-640 | NTS | 10 OF 10 | MD-CA640F-NI | A |