MIAMI-DADE COUNTY
PRODUCT CONTROL SECTION
11805 SW 26 Street, Room 208
Miami, Florida 33175-2474
T (786) 315-2590 F (786) 315-2599
www.miamidade.gov/economy

DEPARTMENT OF REGULATORY AND ECONOMIC RESOURCES (RER)
BOARD AND CODE ADMINISTRATION DIVISION

NOTICE OF ACCEPTANCE (NOA)

Gensteel Doors Inc.
4950 Hickmore Street
Ville St. Laurent, Quebec, Canada H4T1K6

SCOPE:

This NOA is being issued under the applicable rules and regulations governing the use of construction materials. The documentation submitted has been reviewed and accepted by Miami-Dade County RER -Product Control Section to be used in Miami Dade County and other areas where allowed by the Authority Having Jurisdiction (AHJ).
This NOA shall not be valid after the expiration date stated below. The Miami-Dade County Product Control Section (In Miami Dade County) and/or the AHJ (in areas other than Miami Dade County) reserve the right to have this product or material tested for quality assurance purposes. If this product or material fails to perform in the accepted manner, the manufacturer will incur the expense of such testing and the AHJ may immediately revoke, modify, or suspend the use of such product or material within their jurisdiction. RER reserves the right to revoke this acceptance, if it is determined by Miami-Dade County Product Control Section that this product or material fails to meet the requirements of the applicable building code.
This product is approved as described herein, and has been designed to comply with the Florida Building Code, including the High Velocity Hurricane Zone.

DESCRIPTION: Series "GenStorm 4888 HD" Flush Outswing Single & Double Steel Doors-LMI

APPROVAL DOCUMENT: Drawing No. **AD15-35**, titled "Genstorm Outswing 4888 HD Steel Door System (LMI)", sheet 1 through 12 of 12, dated MAR 25, 2016, prepared by MCY Engineering, Inc., signed and sealed by Yiping Wang, P.E., bearing the Miami-Dade County Product Control Approval stamp with the Notice of Acceptance number and approval date by the Miami-Dade County Product Control Section.

MISSILE IMPACT RATING: Large and Small Missile Impact Resistant

Limitations:

1. Doors are rated for water infiltration requirement w/ threshold (w/ item #18, bulb gasket & cell foam tape entire frame perimeter). **All** door panels require Stiffeners (items **#20, #21& #22**), see sheet **8** for details.
2. Lock Options **# 1, 2 & 4** in **sheet 9,** require total two (2) flush bolts (top/bottom) on the Inactive panel. Dorma 9400 series Surface Vertical Rod & Dorex 9500 FV must use the corresponding strikes at rod ends.

LABELING: Each unit shall bear one of the following permanent labels:

Gensteel Doors Inc.	Gensteel Doors Inc.	North American Doors Corp.
4950 Hickmore Street	2335 Industrial Park Drive	1471 Military Turnpike
Ville St. Laurent, Quebec, Canada H4T1K6	Cornwall, Ontario, Canada K6H7M4	Plattsburgh, NY 12901-1911

and series and the statement: "Miami-Dade County Product Control Approved".

RENEWAL of this NOA shall be considered after a renewal application has been filed and there has been no change in the applicable building code negatively affecting the performance of this product.

TERMINATION of this NOA will occur after the expiration date or if there has been a revision or change in the materials, use, and/or manufacture of the product or process. Misuse of this NOA as an endorsement of any product, for sales, advertising or any other purposes shall automatically terminate this NOA. Failure to comply with any section of this NOA shall be cause for termination and removal of NOA.

ADVERTISEMENT: The NOA number preceded by the words Miami-Dade County, Florida, and followed by the expiration date may be displayed in advertising literature. If any portion of the NOA is displayed, then it shall be done in its entirety.

INSPECTION: A copy of this entire NOA shall be provided to the user by the manufacturer or its distributors and shall be available for inspection at the job site at the request of the Building Official.
This NOA consists of this page 1 and evidence pages E-1, as well as approval document mentioned above.
The submitted documentation was reviewed by **Ishaq I. Chanda, P.E**

MIAMI-DADE COUNTY APPROVED

4/15/16

NOTICE OF ACCEPTANCE: EVIDENCE SUBMITTED

A. DRAWINGS

1. Manufacturer's die drawings and sections
2. Drawing No. **AD15-35**, titled "Genstorm Outswing 4888 HD Steel Door System (LMI)", sheet 1 through 12 of 12, dated MAR 25, 2016, prepared by MCY Engineering, Inc., signed and sealed by Yiping Wang, P.E.

B. TESTS

1. Test reports on 1) Air Infiltration Test, per FBC, TAS 202-94
   2) Uniform Static Air Pressure Test, Loading per FBC, TAS 202-94
   3) Water Resistance Test, per FBC, TAS 202-94(see approval limitations)
   4) Large Missile Impact Test per FBC, TAS 201-94
   5) Cyclic Wind Pressure Loading per FBC, TAS 203-94
   6) Forced Entry Test, per FBC 2411 3.2.1 and TAS 202-94

Along with marked-up drawings and installation diagram of Genstorm Opaque Outswing Double Doors, prepared by Fenestration Testing Laboratory, Inc., Test Report No. **FTL 7654**, dated 10/13/09 and **FTL 5898**, dated 08/14/2014, signed and sealed by Idalmis Ortega, P.E.
Note: This test report has been revised by an addendum letter dated August 31, 2015, issued by fenestration Testing Lab, signed by Ms. Illiana Sanchez.

C. CALCULATIONS

1. Anchor verification calculations and structural analysis, complying with FBC-2014 (**5th Edition**), prepared by MCY Engineering, Inc., dated 05/18/15 and last revised on 11/11/15, signed and sealed by Yiping Wang, P.E.

D. QUALITY ASSURANCE

1. Miami Dade Department of Regulatory and Economic Resources (RER).

E. MATERIAL CERTIFICATIONS

1. Tensile test report N0. FTL 7654 per ASTM A370-05 dated 08/14/14, issued by Fenestration Testing Lab, signed and sealed by Idalmis Ortega, P.E.
2. Notice of Acceptance No. **14-1015.08** issued to Johns Manville for "Polyisocyanurate foam(R-panel 25PSI)", expiring on 02/05/19.
3. Technical specification of Fiberglass 800 series insulation compliance to ASTME-84, published by Johns Manville dated 06/15.
4. Technical specification of "Expanded Polystyrene (EPS-type I)" sheet, published by LigerLite (using STYROCHEM's EPS beads)

F. STATEMENTS

1. Statement letter of conformance to FBC 2014 (5th Edition), dated 05/18/15, prepared by MCY Engineering, Inc, signed and sealed by Yiping Wang, P.E.
2. Statement letter dated March 30, 2016, for use of STYROCHEM's EPS beads to manufacturer LegerLite core, issued by Le Groupe LegerLite Inc, signed by Patrik L'Ecuyer, VP-Ventes.
3. Statement letter of Lab. Compliance, as a part of above test reports.

G. OTHER

1. Distribution agreement between GenSteel Door, Canada & North American Door Corp, N.Y. dated 10/22/10, signed by Bruno Gervasi and Antonio Gervasi, respectively.

Ishaq I. Chanda

Ishaq I. Chanda, P.E.
Product Control Examiner
NOA No. 15-0526.02
Expiration Date: April 21, 2021
Approval Date: April 21, 2016

GENSTEEL DOORS INC.
SERIES "GENSTORM OUTSWING 4888 HEAVY DUTY OPAQUE STEEL DOOR"
LARGE MISSILE IMPACT (LMI & SMI)

SERIES GENSTORM OUTSWING 4888 HEAVY DUTY OPAQUE STEEL DOOR (LMI & SMI)

- THIS PRODUCT HAS BEEN DESIGNED AND TESTED TO COMPLY WITH THE REQUIREMENTS OF THE FLORIDA BUILDING CODE 2014 EDITION INCLUDING HIGH VELOCITY HURRICANE ZONE (HVHZ).

- DOORS RATED FOR LARGE AND SMALL MISSILE IMPACT AND DO NOT REQUIRE SHUTTERS.

- DOORS APPROVED FOR INSTALLATIONS WHERE WATER INFILTRATION RESISTANCE IS REQUIRED (SINGLE ROW SELF-ADHESIVE CLOSED CELL FOAM TAPE TO BE APPLIED TO ENTIRE PERIMETER OF FRAME).

- DOOR CAN ALSO BE INSTALLED WHEN WATER INFILTRATION RESISTANCE IS NOT REQUIRED (SINGLE ROW SELF-ADHESIVE CLOSED CELL FOAM TAPE TO BE APPLIED TO ENTIRE PERIMETER OF FRAME).

- ANCHORS SHALL BE AS LISTED, SPACED AS SHOWN ON DETAILS. ANCHORS EMBEDMENT TO BASE MATERIAL SHALL BE BEYOND WALL DRESSING OR STUCCO.

- ANCHORING OR LOADING CONDITIONS NOT SHOWN IN THESE DETAILS ARE NOT PART OF THIS APPROVAL.

- MATERIALS INCLUDING BUT NOT LIMITED TO STEEL/METAL SCREWS THAT COME INTO CONTACT WITH OTHER DISSIMILAR MATERIALS SHALL MEET THE REQUIREMENTS.

- METAL STRUCTURES AT HEAD/JAMBS NOT BY GENSTEEL DOOR CO. MUST SUPPORT LOADS IMPOSED BY DOOR SYSTEM AND TRANSFER THEM TO THE BUILDING STRUCTURE.

- 2XWOOD BUCKS AT HEAD/JAMBS BY OTHERS MUST BE ANCHORED PROPERLY TO TRANSFER LOADS TO THE STRUCTURE.

- A LOAD DURATION FACTOR IN ALLOWABLE STRESS IS USED IN DESIGN OF ANCHORS INTO WOOD ONLY.

- DOOR PANEL: MIN. 20 GA. (.038") STEEL MIN. Fy = 42 KSI MIN & Fu = 53 KSI MIN.
  DOOR FRAME: MIN. 18 GA. (.048") STEEL MIN. Fy = 42 KSI MIN. & Fu = 53 KSI MIN.

- DOOR PANEL STAINLESS OPTION: 20 GA (.038") STAINLESS STEEL, TYPES 304 OR 316 GRADES, Fy = 42 KSI MIN. Fu = 53 KSI MIN. DOOR PANEL MEETING MIN. Fy= 42 KSI & Fu = 53 KSI OR BETTER MAY QUALIFY HAVING "MIL-CERTIFICATE" AS A VERIFICATION OF THE AVAILABLE MIN. YIELD STRENGTH.

- DOOR FRAME STAINLESS OPTION: 18 GA (.048") STAINLESS STEEL TYPES 304 OR 316 GRADES, Fy = 42 KSI MIN. & Fu = 53 KSI MIN. DOOR FRAME MEETING MIN Fy = 42 KSI & Fu = 53 KSI OR BETTER MAY QUALIFY HAVING "MIL-CERTIFICATE" AS A VERIFICATION OF THE AVAILABLE MIN. YIELD STRENGTH.

- ULTIMATE DESIGN LOAD OBTAINED FROM ASCE 7-10, MULTIPLY BY 0.6, SHALL BE LESS THAN OR EQUAL TO MAX. DESIGN LOAD IN THIS DOCUMENT.

NOTES:
EGRESS REQUIREMENTS TO BE REVIEWED BY BUILDING OFFICIAL.

SEALANT:
ALL FRAME JOINTS AND CORNERS TO BE SEALED WITH SILICONE AT PERIMETER

TYPICAL ANCHORS @ JAMB: (REFER TO ELEVATION FOR SPACING)

TYPE A 5/16" DIA. ULTRACONS BY 'ELCO' (Fy=155 ksi Fu = 177 ksi)
THRU EMA (EXISTING MASONRY ANCHOR)
DIRECTLY INTO CONCRETE, fc'=3000 PSI MIN.
1-3/4" MIN. EMBED, 2 3/16" MIN. EDGE DISTANCE

TYPE A1 5/16" DIA. ULTRACONS BY 'ELCO' (Fy=155 ksi Fu = 177 ksi)
THRU EMA (EXISTING MASONRY ANCHOR)
INTO WOOD. SG=0.55 MIN.
1 1/2" MIN. EMBED, 1 1/2" MIN. EDGE DISTANCE

TYPE B 3/8" DIA. HILTI SLEEVE ANCHOR
THRU EMA (EXISTING MASONRY ANCHOR)
DIRECTLY INTO CONCRETE fc'=3000 PSI MIN.
1-1/4" MIN. EMBED, 3 1/4" MIN. EDGE DISTANCE

TYPE B1 3/8" DIA. HILTI SLEEVE ANCHOR
THRU EMA (EXISTING MASONRY ANCHOR)
DIRECTLY INTO GROUT FILLED CONCRETE BLOCK
fm'=3000 PSI MIN.
1-1/4" MIN. EMBED, 3 1/2" MIN. EDGE DISTANCE

TYPE C 3/8" DIA. SLEEVE ANCHOR BY 'WEJ-IT'
THRU EMA (EXISTING MASONRY ANCHOR)
DIRECTLY INTO CONCRETE fc'=4000 PSI MIN.
2-3/8" MIN. EMBED, 2 3/8" MIN. EDGE DISTANCE

TYPE C1 3/8" DIA. SLEEVE ANCHOR BY 'WEJ-IT'
THRU EMA (EXISTING MASONRY ANCHOR)
DIRECTLY INTO GROUT FILLED CONCRETE BLOCK
fm'=3000 PSI MIN.
1 1/4" MIN. EMBED, 2 3/8" MIN. EDGE DISTANCE

TYPE D 3/8" DIA. SLEEVE ANCHOR BY 'POWERS'
THRU EMA (EXISTING MASONRY ANCHOR)
DIRECTLY INTO CONCRETE fc'=3000 PSI MIN.
2 1/2" MIN. EMBED, 3 1/8" MIN. EDGE DISTANCE

TYPE D1 3/8" DIA. SLEEVE ANCHOR BY 'POWERS'
THRU EMA (EXISTING MASONRY ANCHOR)
DIRECTLY INTO GROUT FILLED CONCRETE BLOCK
fm'=3000 PSI MIN.
2" MIN. EMBED, 3 1/8" MIN. EDGE DISTANCE

TYPE E 5/16" DIA. SMS OR MACHINE BOLTS (MIN. GRADE 2 CRS) OR ST/ST
THRU EMA (EXISTING MASONRY ANCHOR)
INTO METAL STRUCTURES (STEEL OR ALUMINUM 1/8" MIN. THICK.)
STEEL : Fy = 36 KSI MIN.
ALUMINUM : 6063-T5 MIN.
(STEEL IN CONTACT WITH ALUMINUM TO BE PLATED OR PAINTED)
5/8" MIN. EDGE DISTANCE

TYPE G WIRE ANCHOR (FA3030) (FY = 60 KSI.) MIN. 10" LG
HEAD/JAMB TO BE GROUT FILLED (3000 PSI MIN.)
0.173 DIA. STEEL WIRE ANCHORS EMBED INTO GROUT FILLED CONCRETE BLOCK
fm'=3000 PSI MIN.

TYPE H 3/8" POWERS WEDGE BOLT ANCHOR BY 'POWERS'
THRU EMA (EXISTING MASONRY ANCHOR)
DIRECTLY INTO CONCRETE fc'=3000 PSI MIN.
1 1/2" MIN. EMBED, 3 1/4" MIN. EDGE DISTANCE

TYPICAL ANCHORS @ THRESHOLD:

TYPE F 1/4" DIA. ULTRACON BY "ELCO" (Fy =155 ksi Fu = 177 ksi)
DIRECTLY INTO CONCRETE fc'=3000 PSI MIN.
1-1/2" MIN. EMBED, 2-1/2" MIN. EDGE DISTANCE

TYPE F1 1/4" DIA. TAPCON BY "ELCO" (Fy = 100 ksi Fu = 125 ksi)
DIRECTLY INTO CONCRETE fc'=3000 PSI MIN.
1-1/2" MIN. EMBED, 2-1/2" MIN. EDGE DISTANCE

TYPICAL ANCHOR @ FRAME JAMB BOTTOM CORNER:

TYPE F2 1/4" OR 5/16" DIA. ULTRACON BY "ELCO" (Fy = 155 ksi Fu = 177 ksi)
DIRECTLY INTO CONCRETE fc'=3000 PSI MIN.
1-1/2" MIN. EMBED, 2-1/2" MIN. EDGE DISTANCE

Approved as complying with the
Florida Building Code
Date APR 21, 2016
NOA# 15-0526.02
Miami Dade Product Control
By Ishaq I. Chanda

MAR 25 2016

MIAMI DADE COUNTY

YI PING WANG
STATE OF FLORIDA REGISTRATION
LICENSE
PE #55983
C.A.N 28677
No. 55983
STATE OF FLORIDA
PROFESSIONAL ENGINEER

REVISIONS

NO	DATE	DESCRIPTION

MCY ENGINEERING, INC.
GLAZING CONSULTANTS
8501 SW 124 AVE. STE. 205A
MIAMI, FL 33183
P: 305.271.0117
F: 786.573.5063
www.MCYUS.com
MCY.Engineering@Att.net

GENSTORM OUTSWING 4888 HD OPAQUE STEEL DOOR (LMI & SMI)

genteeldoors
www.gensteeldoors.com
4950 Hickmore, St. Laurent, Quebec, Canada, H4T1K6
Tel: (514) 733-3562 Fax: (514) 733-1932

DATE	12/24/14
SCALE	AS SHOWN
DRAWN	Joe
PROJECT	11-007

DRAWING NO.
AD15-35

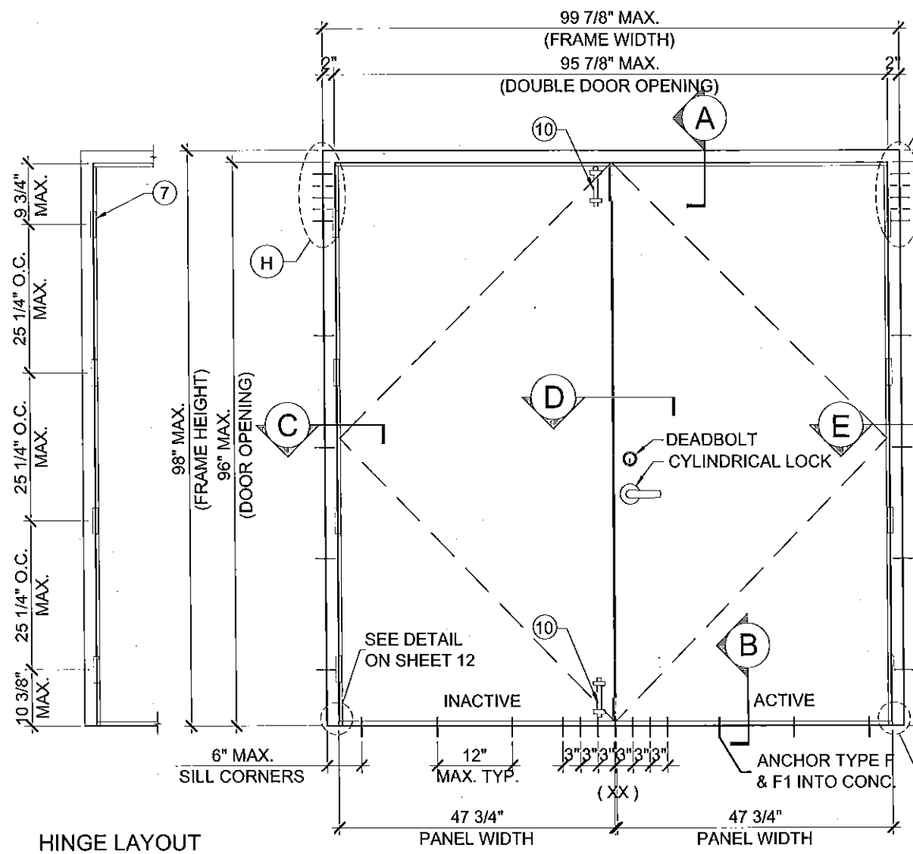

TABLE 1

ANCHOR TYPE (THRU EMA)	NUMBER OF REQ'D ANCHOR
A, B, C1 & D	2
B1, C , D1,E & J	3
A1	5

3000 PSI MIN. GROUT FILLED HEAD/JAMB

8" MAX.
8" MAX.
8" MAX.
16" O.C. MAX. TYP.
8" MAX.

HINGE LAYOUT
(FOR BOTH SINGLE & DOUBLE DOORS)

TYPICAL EXTERIOR ELEVATION (XX)
(DOUBLE PANEL OUTSWING STEEL DOOR)
CYLINDRICAL LOCK + DEADBOLT
(LOCK OPTION 1 & 4 SEE SHEET 9)

WIRE ANCHOR LAYOUT (TYPE G ANCHOR)
(FOR DOUBLE DOOR)
(TO BE USED WITH 3000 PSI GROUTED HEADER & JAMBS)

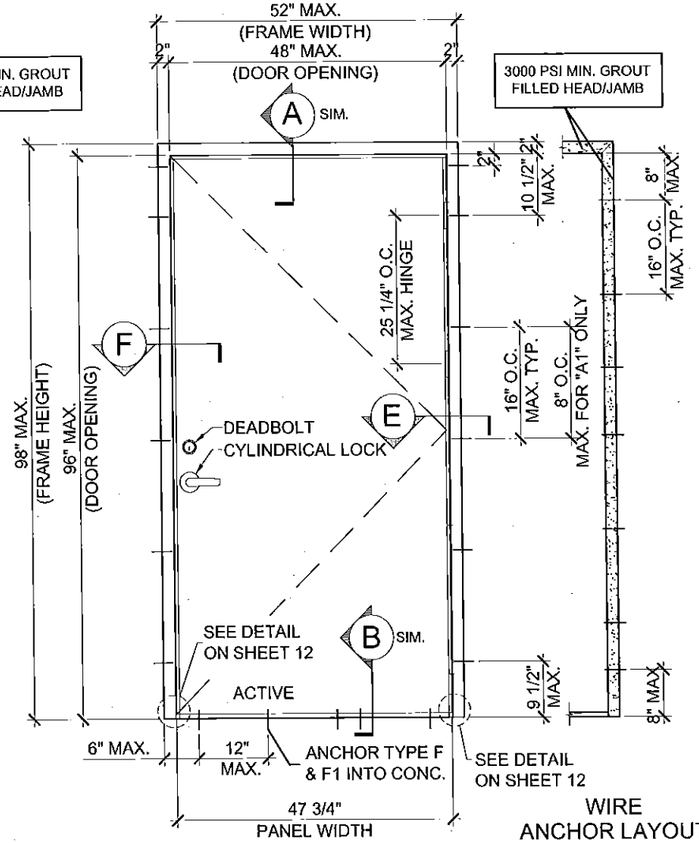

TYPICAL EXTERIOR ELEVATION (X)
(SINGLE PANEL OUTSWING STEEL DOOR)
CYLINDRICAL LOCK + DEADBOLT
(LOCK OPTION 1 & 4 SEE SHEET 9)

WIRE ANCHOR LAYOUT (TYPE G ANCHOR)
(FOR SINGLE DOOR)
(TO BE USED WITH 3000 PSI GROUTED HEADER & JAMBS)

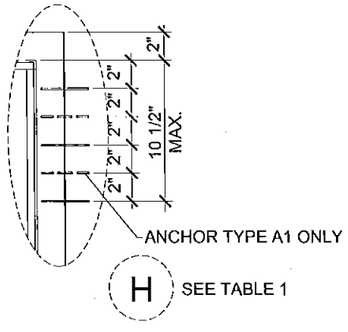

DESIGN LOADS (FOR SIZES SHOWN ABOVE OR SMALLER) AS PERMITTED BY FBC
+90.0 PSF
- 90.0 PSF

Approved for complying with the Florida Building Code
Date 4/26/16
NOA# 15-0526.02
Miami Dade Product Control
By [signature]

HINGES:
STEEL BUTT HINGES 4 PER LEAF.
TO BE FASTENED BY (4) #12-24 x 1/2"
FLATHEAD MACHINE SCREWS
TO THE DOOR PANEL AND TO
THE FRAME. TOTAL OF (8) SCREWS PER HINGE

MIAMI DADE COUNTY

YIPING WANG, P.E.
FLORIDA REGISTRATION
PE #55983
C.A.N. 28677
No. 55983
STATE OF FLORIDA
PROFESSIONAL ENGINEER

MAR 25 2016

REVISIONS

NO	DATE	DESCRIPTION

MCY ENGINEERING, INC.
GLAZING CONSULTANTS
8501 SW 124 AVE. STE. 205A
MIAMI, FL. 33183
P: 305.271.0117
F: 786.573.5063
www.MCYUS.com
MCY.Engineering@Att.net

GENSTORM OUTSWING 4888 HD OPAQUE STEEL DOOR (LMI & SMI)

gensteeldoors
www.gensteeldoors.com
4950 Hickmore, St. Laurent, Quebec, Canada, H4T1K6
Tel: (514) 733-3562 Fax: (514) 733-1932

DATE	12/24/14
SCALE	AS SHOWN
DRAWN	Joe
PROJECT	11-007

DRAWING NO.
AD15-35

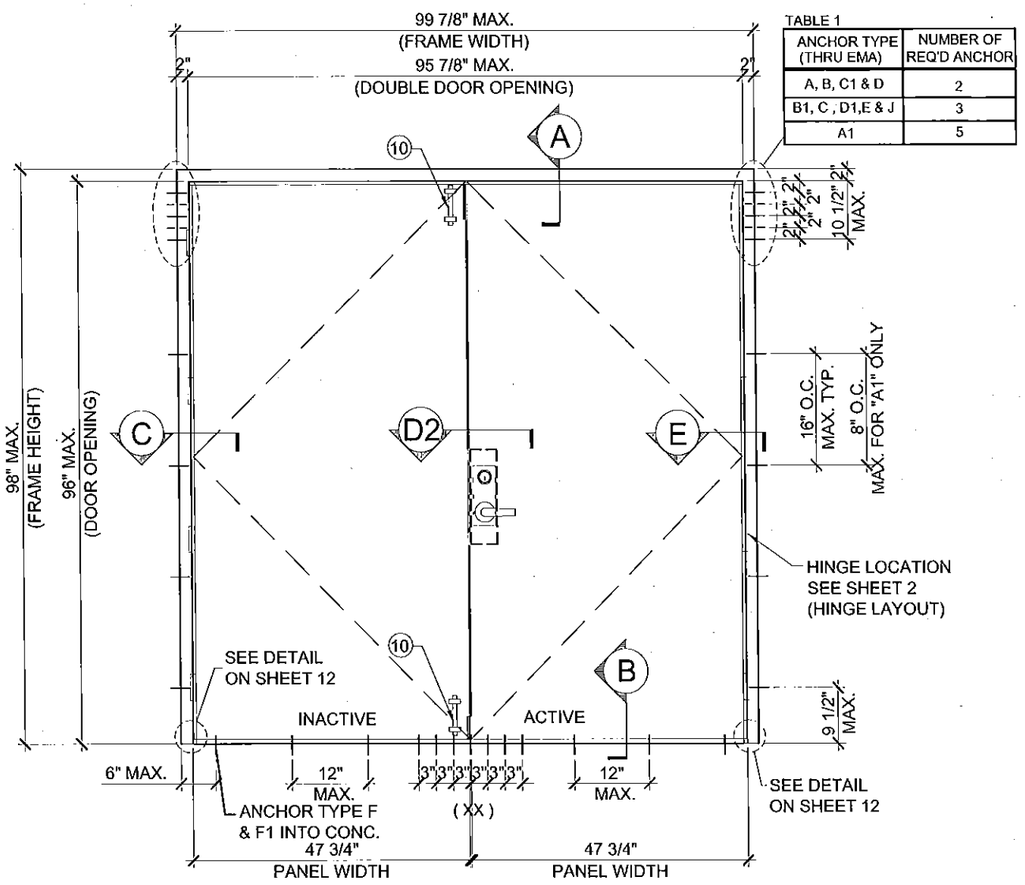

TABLE 1

ANCHOR TYPE (THRU EMA)	NUMBER OF REQ'D ANCHOR
A, B, C1 & D	2
B1, C , D1,E & J	3
A1	5

TYPICAL EXTERIOR ELEVATION (XX)

(DOUBLE PANEL OUTSWING STEEL DOOR)
MORTISE LOCK W/ DEADBOLT
(LOCK OPTION 2 SEE SHEET 9)

DESIGN LOADS (FOR SIZES SHOWN ABOVE OR SMALLER) AS PERMITTED BY FBC
+90.0 PSF
- 90.0 PSF

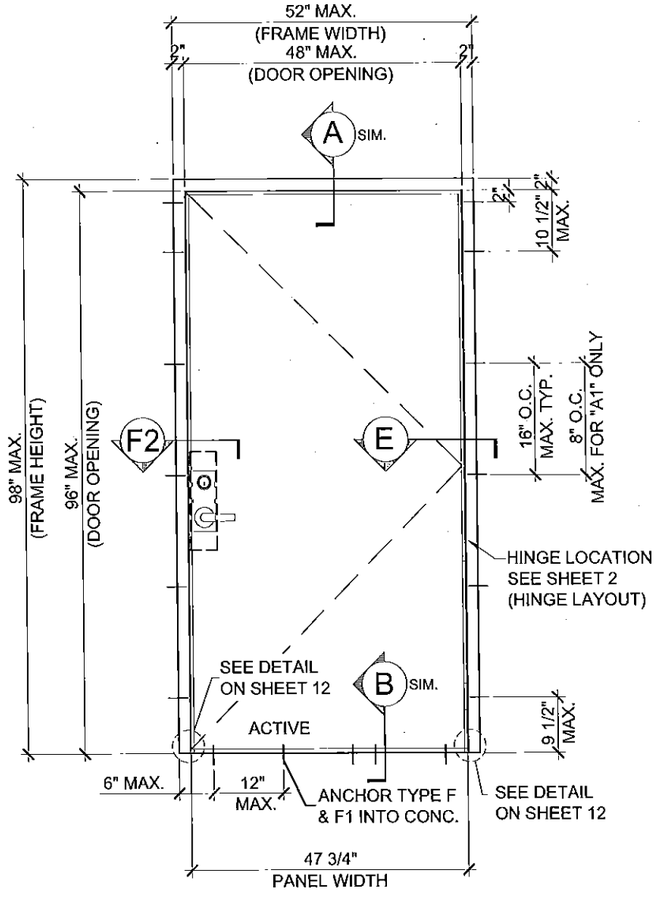

TYPICAL EXTERIOR ELEVATION (X)

(SINGLE PANEL OUTSWING STEEL DOOR)
MORTISE LOCK W/ DEADBOLT
(LOCK OPTION 2 SEE SHEET 9)

Approved as complying with the Florida Building Code
Date 4/26/16
NOA# 15-0526.02
Miami Dade Product Control
By

MIAMI DADE COUNTY

YIPING WANG P.E.
FLORIDA REGISTRATION
No. 55983
STATE OF FLORIDA
PROFESSIONAL ENGINEER
MAR 25 2016

REVISIONS

NO.	DATE	DESCRIPTION

MCY ENGINEERING, INC.
GLAZING CONSULTANTS
8501 SW 124 AVE. STE. 205A
MIAMI, FL 38183
P: 305.271.0117
F: 786.573.5063
www.MCYUS.com
MCY.Engineering@Att.net

GENSTORM OUTSWING 4888 HD OPAQUE STEEL DOOR (LMI & SMI)

genSteeldoors
www.gensteeldoors.com
4950 Hickmore, St. Laurent, Quebec, Canada, H4T1K6
Tel: (514) 733-3562 Fax: (514) 733-1932

DATE	12/24/14
SCALE	AS SHOWN
DRAWN	Joe
PROJECT	11-007

DRAWING NO.
AD15-35

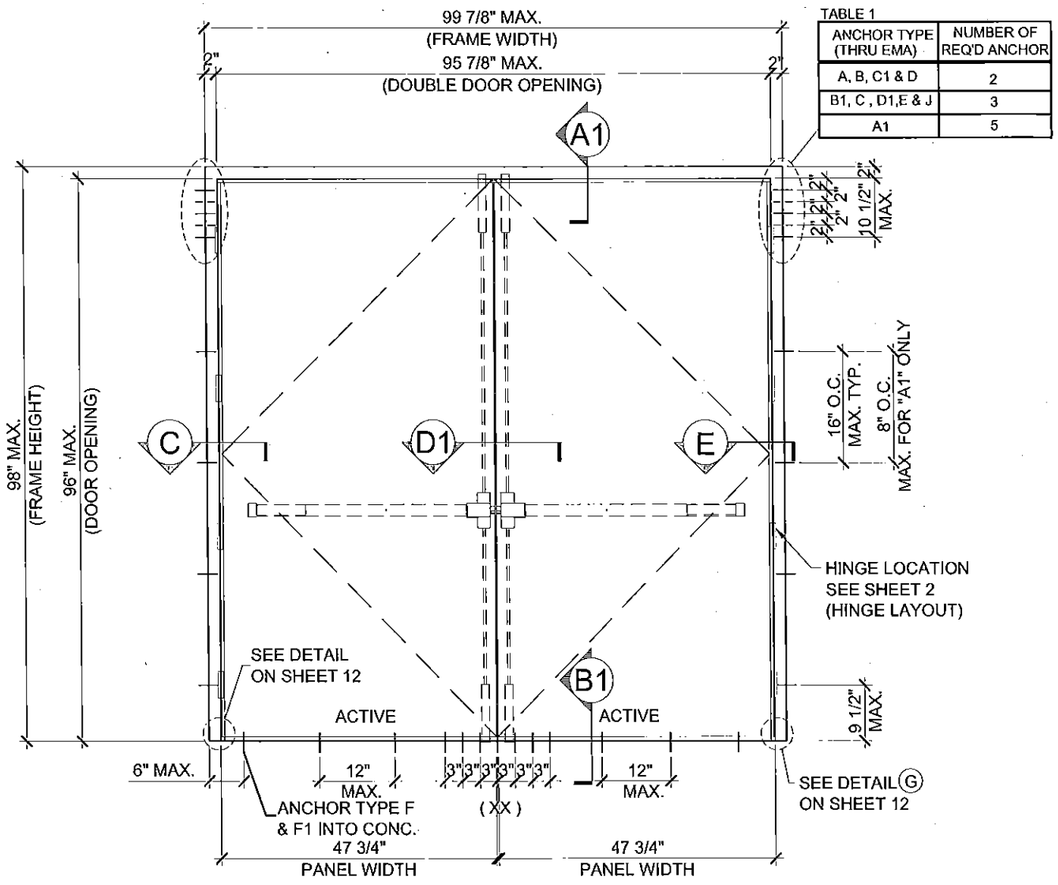

TABLE 1

ANCHOR TYPE (THRU EMA)	NUMBER OF REQ'D ANCHOR
A, B, C1 & D	2
B1, C , D1,E & J	3
A1	5

TYPICAL EXTERIOR ELEVATION (XX)

(DOUBLE PANEL OUTSWING STEEL DOOR)
SURFACE VERTICAL ROD (SVR)
(LOCK OPTION 3 AT INTERIOR SIDE SEE SHEET 9)

DESIGN LOADS (FOR SIZES SHOWN ABOVE OR SMALLER AS PERMITTED BY FBC
+90.0 PSF
- 90.0 PSF

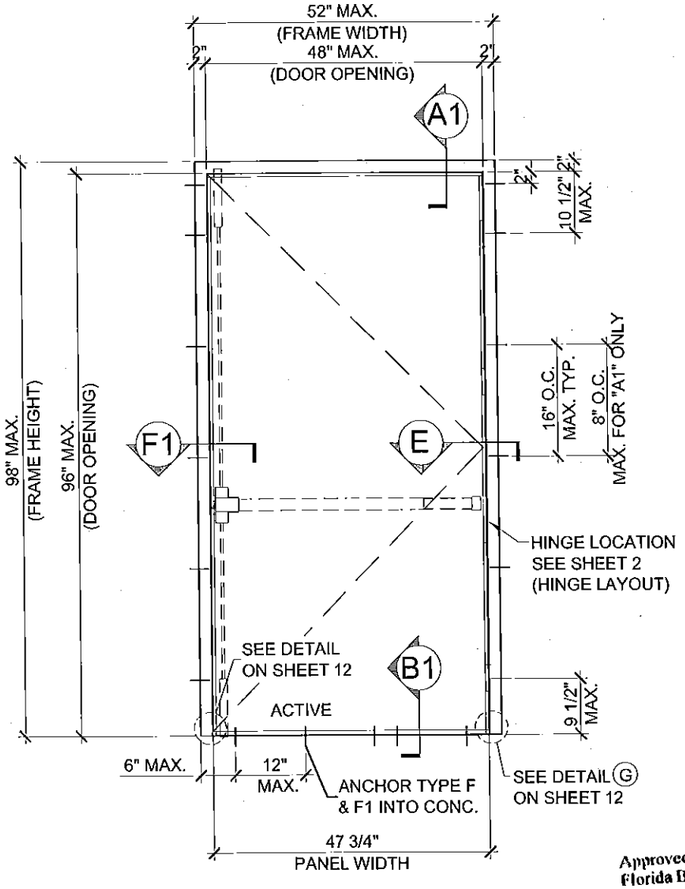

TYPICAL EXTERIOR ELEVATION (X)

(SINGLE PANEL OUTSWING STEEL DOOR)
SURFACE VERTICAL ROD (SVR)
(LOCK OPTION 3 & 5 AT INTERIOR SIDE SEE SHEET 9)

Approved as complying with the Florida Building Code
Date 4/26/16
NOA# 15-0526.02
Miami Dade Product Control
By Ishaq I. Chanda

MIAMI DADE COUNTY

YIPING WANG, P.E.
FLORIDA REGISTRATION
PE #55983
C.A.N. 26002
No. 55983
STATE OF FLORIDA
PROFESSIONAL ENGINEER
MAR 25 2016

REVISIONS		
NO.	DATE	DESCRIPTION

MCY ENGINEERING, INC.
GLAZING CONSULTANTS
8501 SW 124 AVE. STE. 205A
MIAMI, FL. 33183
P: 305.271.0117
F: 786.573.5063
www.MCYUS.com
MCY.Engineering@Att.net

GENSTORM OUTSWING 4888 HD OPAQUE STEEL DOOR (LMI & SMI)

gensteeldoors
www.gensteeldoors.com
4950 Hickmore, St. Laurent, Quebec, Canada, H4T1K6
Tel: (514) 733-3562 Fax: (514) 733-1932

DATE	12/24/14
SCALE	AS SHOWN
DRAWN	Joe
PROJECT	11-007

DRAWING NO.
AD15-35

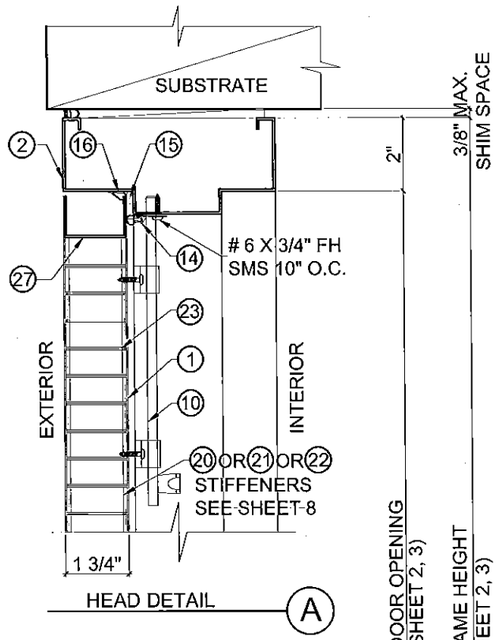

HEAD DETAIL (A)

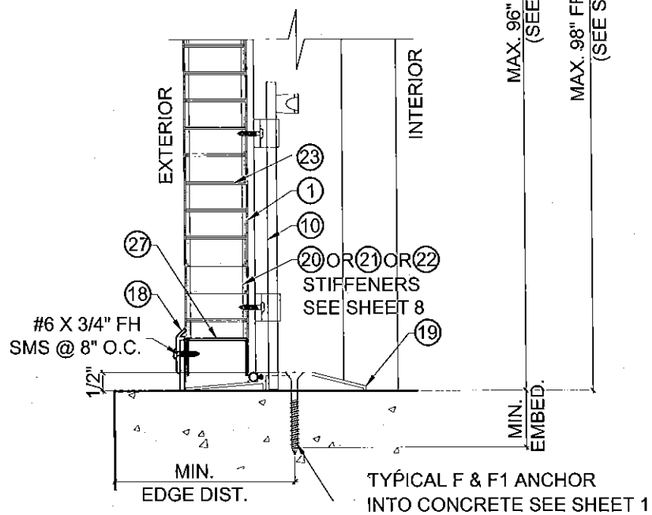

TYPICAL NGP 950V THRESHOLD (B)
NON-WATER RATED
(DETAIL AT INACTIVE PANEL)

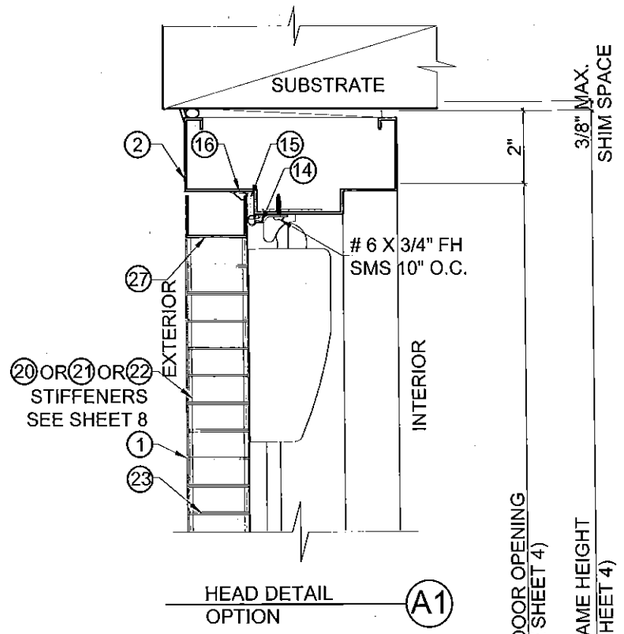

HEAD DETAIL OPTION (A1)

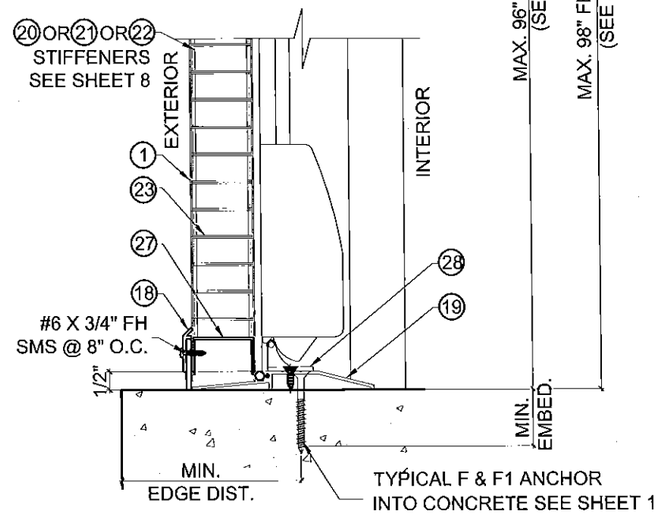

TYPICAL NGP 950V THRESHOLD (B1)
OPTION
NON-WATER RATED
(DETAIL AT ACTIVE PANEL SVR)

SEE SHEET 9 OF 12
FOR LOCK OPTIONS
FOR DIFFERENT HARDWARE
(SINGLE AND DOUBLE DOORS)

Approved as complying with the
Florida Building Code
Date 4/26/16
NOA# 15-0526.02
Miami Dade Product Control
By Ishaq I. Chanda

MIAMI DADE COUNTY

YIPING WANG
FLORIDA REGISTRATION
LICENSE
P.E. 55983
C.A.N. 28677
No. 55983
STATE OF
FLORIDA
PROFESSIONAL ENGINEER

MAR 25 2016

REVISIONS	
NO.	DATE / DESCRIPTION

MCY ENGINEERING, INC.
GLAZING CONSULTANTS
8501 SW 124 AVE. STE. 205A
MIAMI, FL 33183
P: 305.271.0117
F: 786.573.5063
www.MCYUS.com
MCY.Engineering@att.net

GENSTORM OUTSWING 4888 HD OPAQUE STEEL DOOR (LMI & SMI)

gensteeldoors
www.gensteeldoors.com
4950 Hickmore, St. Laurent, Quebec, Canada, H4T1K6
Tel: (514) 733-3562 Fax: (514) 733-1932

DATE	12/24/14
SCALE	AS SHOWN
DRAWN	Joe
PROJECT	11-007

DRAWING NO.
AD15-35

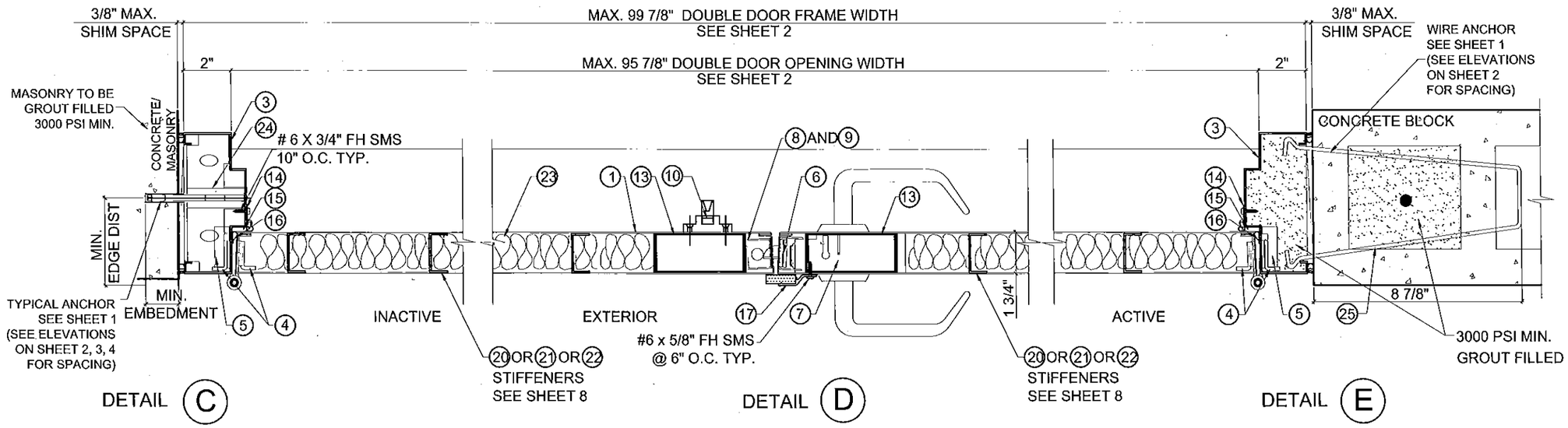

LOCK OPTION #1 & 4
CYLINDER LOCK W/DEADBOLT
(FOR PANEL STIFFENER OPTIONS SEE SHEET 8)

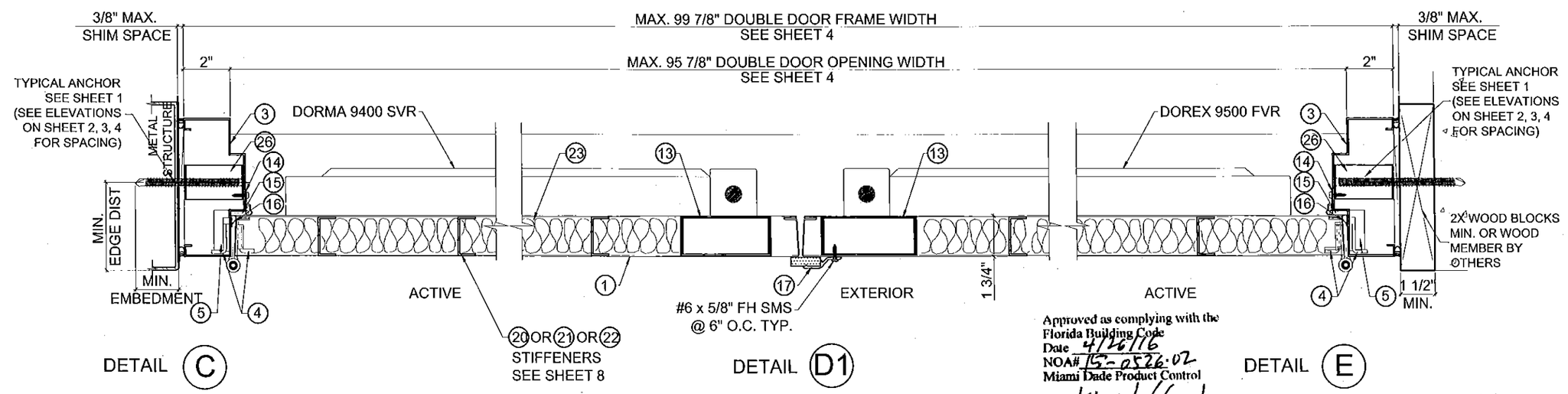

Approved as complying with the Florida Building Code
Date 4/26/16
NOA# 15-0526.02
Miami Dade Product Control
By Ishaq I. Chand

LOCK OPTION #3
SVR (SURFACE VERTICAL ROD)
(FOR PANEL STIFFENER OPTIONS SEE SHEET 8)

MIAMI DADE COUNTY

YIPING WANG, P.E.
FLORIDA REGISTRATION
LICENSE
#55983
C.A.N. 28677
No. 55983
STATE OF FLORIDA
PROFESSIONAL ENGINEER

MAR 25 2016

REVISIONS		
NO.	DATE	DESCRIPTION

MCY ENGINEERING, INC.
GLAZING CONSULTANTS
8501 SW 124 AVE. STE. 205A
MIAMI, FL 33183
P: 305.271.0117
F: 786.573.5063
www.MCYUS.com
MCY.Engineering@Att.net

GENSTORM OUTSWING 4888 HD OPAQUE STEEL DOOR (LMI & SMI)

gensteeldoors
www.gensteeldoors.com
4950 Hickmore, St. Laurent, Quebec, Canada, H4T1K6
Tel: (514) 733-3562 Fax: (514) 733-1932

DATE	12/24/14
SCALE	AS SHOWN
DRAWN	Joe
PROJECT	11-007

DRAWING NO.
AD15-35

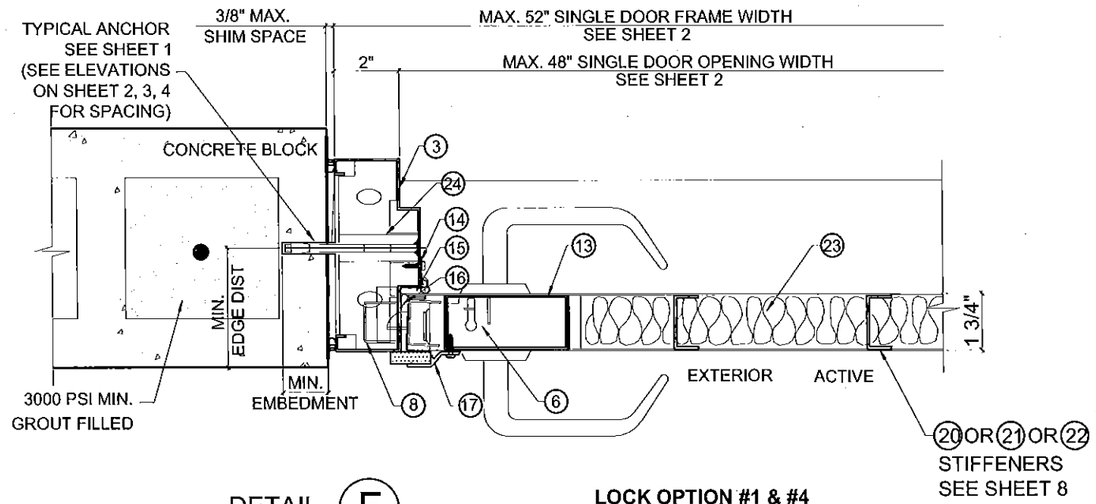

DETAIL F

LOCK OPTION #1 & #4
CYLINDER LOCK W/ DEADBOLT
(FOR PANEL STIFFENER OPTIONS SEE SHEET 8)

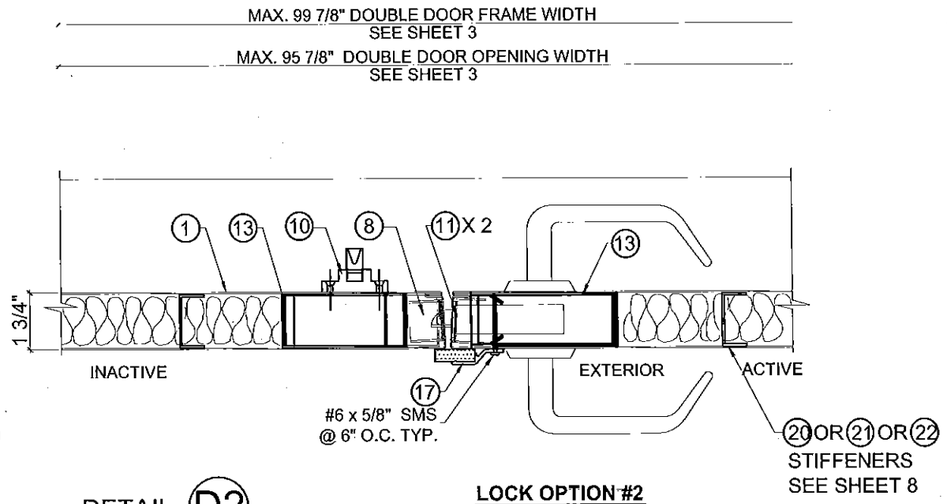

DETAIL D2

LOCK OPTION #2
MORTISE LOCK W/DEADBOLT
(FOR PANEL STIFFENER OPTIONS SEE SHEET 8)

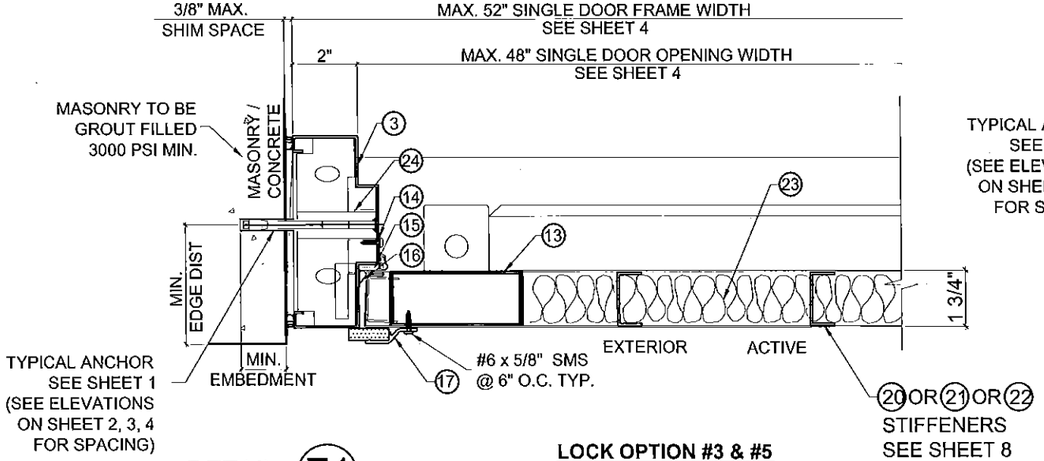

DETAIL F1

LOCK OPTION #3 & #5
SVR (SURFACE VERTICAL ROD)
(FOR PANEL STIFFENER OPTIONS SEE SHEET 8)

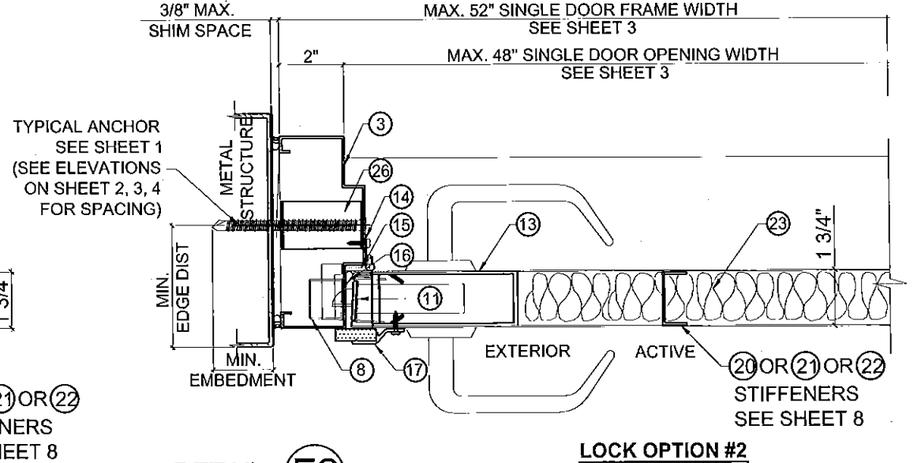

DETAIL F2

LOCK OPTION #2
MORTISE LOCK W/DEADBOLT
(FOR PANEL STIFFENER OPTIONS SEE SHEET 8)

Approved as complying with the
Florida Building Code
Date 4/26/16
NOA# 15-0526.02
Miami Dade Product Control
By Ishaq I. Ahmad

MIAMI DADE COUNTY

YIPING WANG
FLORIDA REGISTRATION
PE No. 55983
C.A.N. 28677
STATE OF FLORIDA
PROFESSIONAL ENGINEER

MAR 25 2016

REVISIONS

NO	DATE	DESCRIPTION

MCY ENGINEERING, INC.
GLAZING CONSULTANTS
8501 SW 124 AVE. STE. 205A
MIAMI, FL 33183
P: 305.271.0117
F: 786.573.5063
www.MCYUS.com
MCY.Engineering@Att.net

GENSTORM OUTSWING 4888 HD OPAQUE STEEL DOOR (LMI & SMI)

gensteeldoors
www.gensteeldoors.com
4950 Hickmore, St. Laurent, Quebec, Canada, H4T1K6
Tel: (514) 733-3562 Fax: (514) 733-1932

DATE	12/24/14
SCALE	AS SHOWN
DRAWN	Joe
PROJECT	11-007

DRAWING NO.
AD15-35

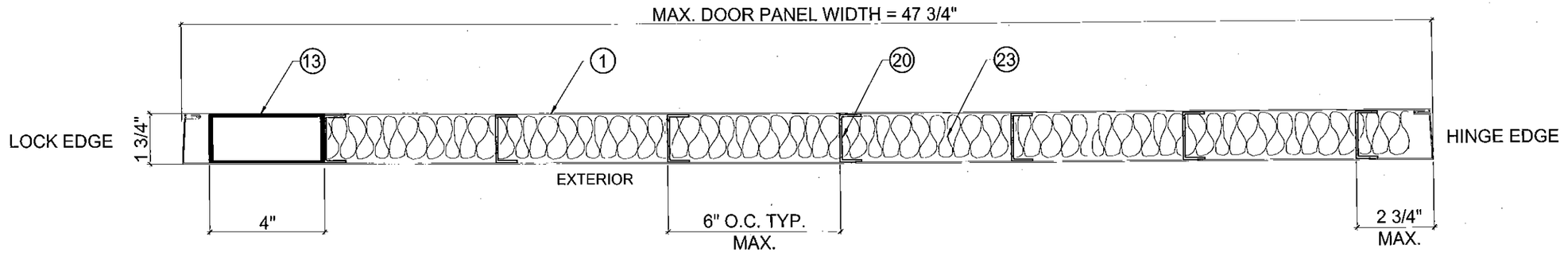

STIFFENER OPTION #1
20 GA LAMINATED STIFFENERS

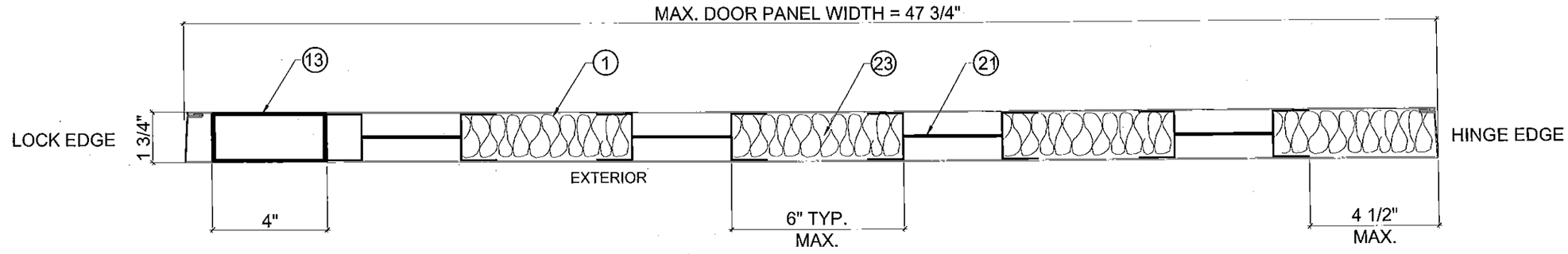

HAT STIFFENER OPTION #2
20 GA WELDED STIFFENERS

Approved as complying with the Florida Building Code
Date 4/26/16
NOA# 15-0526.02
Miami Dade Product Control
By Ishang I. Chandra

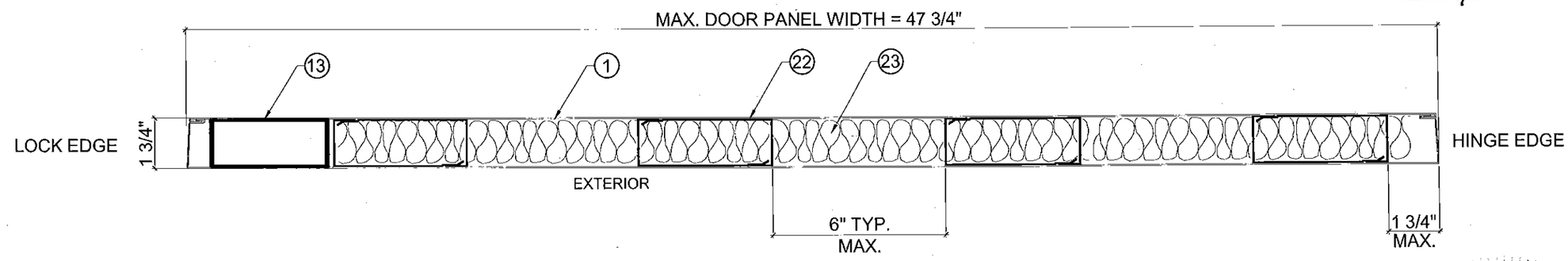

FOR ILLUSTRATION PURPOSES

STIFFENER OPTION #3
20 GA WELDED STIFFENERS

NOTE:
STIFFENER OPTIONS #1, 2 & 3 APPLICABLE FOR ANY LOCK OPTION W/ CORE OPTIONS

MIAMI DADE COUNTY

YIPING WANG, P.E.
LICENSE
FLORIDA REGISTRATION
PE #55983
C.A.N. 28677
No. 55983
STATE OF FLORIDA
PROFESSIONAL ENGINEER

REVISIONS		
NO.	DATE	DESCRIPTION

MCY ENGINEERING, INC.
GLAZING CONSULTANTS
8501 SW 124 AVE. STE. 205A
MIAMI, FL. 33183
P: 305.271.0117
F: 786.573.5063
www.MCYUS.com
MCY.Engineering@Att.net

GENSTORM OUTSWING 4888 HD OPAQUE STEEL DOOR (LMI & SMI)

gensteeldoors
www.gensteeldoors.com
4950 Hickmore, St. Laurent, Quebec, Canada, H4T1K6
Tel: (514) 733-3562 Fax: (514) 733-1932

DATE	12/24/14
SCALE	AS SHOWN
DRAWN	Joe
PROJECT	11-007

DRAWING NO.
AD15-35

MAR 25 2016

LOCK OPTIONS

EXTERIOR ELEVATIONS - OUTSWING DOORS

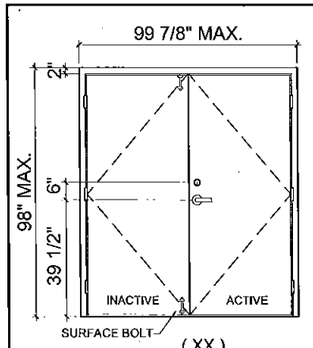

OPTION 1

DOUBLE DOOR

ACTIVE LEAF:

DOREX GX1L SURFACE MOUNT CYLINDER LOCK SET W/ (2) 12-24 X 2 5/8" FH MS AND (2) 8 X 1 1/4" FH MULTI THREAD SCREW, DOREX GX1A SURFACE MOUNT METALLIC DEADBOLT W/ (2) 10-32 X 1 1/2" OH MS AND (2) 8 X 3/4" FH MULTI THREAD SCREW

INACTIVE LEAF:

IVES SB360 SURFACE BOLT W/ (4) 10-24 X 1 1/4" OH MS (TOP & BOTTOM),
(2) FLUSH MOUNT METALLIC STRIKE PLATE EACH W/ (2) 8 X 3/4" FH MULTI THREAD SCREW

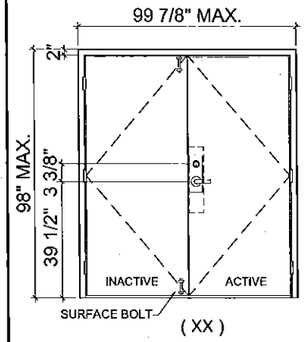

OPTION 2

DOUBLE DOOR

ACTIVE LEAF:

DOREX DM45L MORTISE LOCK W/DEADBOLT SERIES LOCK SET W/ (2) 12 X 3/4" FH MULTI THREAD SCREW
HANDLE W/ (2) #8-32 X 7/8" FH MS,
KEY OPERATOR W/ (2) 10 X 3/4" FH SDS

INACTIVE LEAF:

IVES SB360 SURFACE BOLTS (TOP & BOTTOM) W/ (4) 10-24 X 1 1/4" OH MS
STRIKE FOR LOCKSET W/ (2) 10 X 3/4" FH MULTI THREAD SCREW

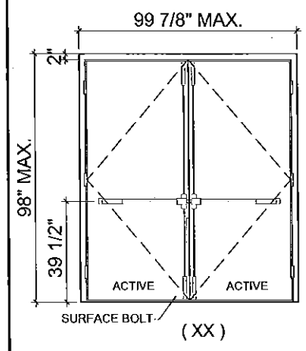

OPTION 3

DOUBLE DOOR

OPTION 3.1

ACTIVE LEAF/INACTIVE LEAF:

DOREX 9500 FV SERIES SURFACE MOUNT METALLIC 2 POINT LOCK SYSTEM W/ ACTIVATING PANIC DEVICE AND VERTICAL RODS ON INTERIOR W/ (4) 10-24 X 1 1/4" OH MS; (2) 10-24 X 1" PH SELF DRILLING MS;
(1) SURFACE MOUNT METALLIC STRIKE PLATE (#9500A5227) AT FRAME HEAD ATTACHED W/ (2) 10-24 X 3/4" FH MS;
(1) SURFACE MOUNT METALLIC STRIKE PLATE (#9500A5233) AT THRESHOLD ATTACHED W/ (2) 10 X 1" FH SMS

OPTION 3.2

ACTIVE LEAF/INACTIVE LEAF:

STRIKE FOR LOCKSET,
DORMA 9400 SURFACE MOUNT METALLIC 2 POINT LOCK SYSTEM W/ ACTIVATING PANIC DEVICE AND VERTICAL RODS ON INTERIOR W/ (4) 12-24 X 1 1/2" FH MS; (2) 12-24 X 3/4" PH MS; (2) 12-24 X 3/4" OH MS AND SEX BOLT;
(1) SURFACE MOUNT METALLIC STRIKE PLATE (#426) AT FRAME HEAD ATTACHED W/ (2) 12-14 X 3/4" OH MS; (1) SURFACE MOUNT METALLIC STRIKE PLATE (#439) AT THRESHOLD ATTACHED WITH SILICONE

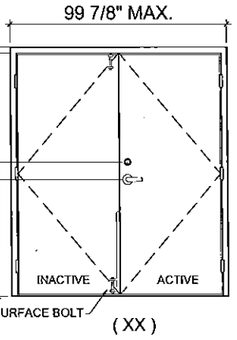

OPTION 4

DOUBLE DOOR

ACTIVE LEAF:

DORMA CL700 CYLINDRICAL LOCKSET W/ (2) 8-32 X 1 3/8" PH MS AND (2) 8 X 3/4" FH MULTI THREAD SCREW
DORMA DB660 MORTISE DEADBOLT W/ (2) 10-32 X 2 9/16" OH MS AND (2) 8 X 3/4" FH MULTI THREAD SCREW

INACTIVE LEAF:

IVES SB360 SURFACE BOLT (TOP & BOTTOM) W/ (4) 10-24 X 1 1/4" OH MS
DEADBOLT STRIKE PLATE W/ (2) 8 X 3/4" FH MULTI THREAD SCREW
STRIKE PLATE W/ (2) 12 X 1" FH MULTI THREAD SCREW

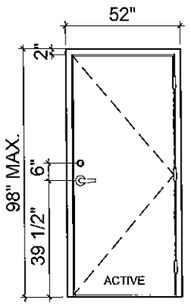

OPTION 1

SINGLE DOOR

ACTIVE LEAF:

DOREX GX1L SURFACE MOUNT CYLINDER LOCK SET W/ (2) 12-24 X 2 5/8" FH MS AND (2) 8 X 1 1/4" FH MULTI THREAD SCREW,
DOREX GX1A SURFACE MOUNT METALLIC DEADBOLT W/ (2) 10-32 X 1 1/2" OH MS AND (2) 8 X 3/4" FH MULTI THREAD SCREW

AT FRAME JAMB:
(2) FLUSH MOUNT METALLIC STRIKE PLATE EACH W/ (2) 8 X 3/4" FH MULTI THREAD SCREW

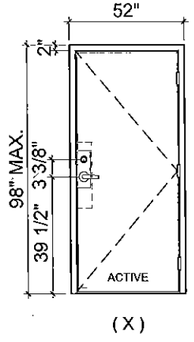

OPTION 2

SINGLE DOOR

ACTIVE LEAF:

DOREX DM45L SERIES LOCK SET W/ (2) 12 X 3/4" FH MULTI THREAD SCREW
HANDLE W/ (2) #8-32 X 7/8" FH MS,
KEY OPERATOR W/ (2) 10 X 3/4" FH SDS,

AT FRAME JAMB:
(2) FLUSH MOUNT METALLIC STRIKE PLATE EACH W/ (2) 8 X 3/4" FH MULTI THREAD SCREW
STRIKE FOR LOCKSET W/ (2) 10 X 3/4" FH MULTI THREAD SCREW

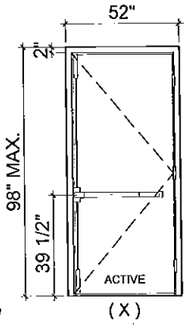

OPTION 3

SINGLE DOOR

ACTIVE LEAF:

DOREX 9500 FV SERIES SURFACE MOUNT METALLIC 2 POINT LOCK SYSTEM W/ ACTIVATING PANIC DEVICE AND VERTICAL RODS ON INTERIOR W/ (4) 10-24 X 1 1/4" OH MS; (2) 10-24 X 1" PH SELF DRILLING MS;
(1) SURFACE MOUNT METALLIC STRIKE PLATE (#9500A5227) AT FRAME HEAD ATTACHED W/ (2) 10-24 X 3/4" FH MS;
(1) SURFACE MOUNT METALLIC STRIKE PLATE (#9500A5233) AT THRESHOLD ATTACHED W/ (2) 10 X 1" FH SMS

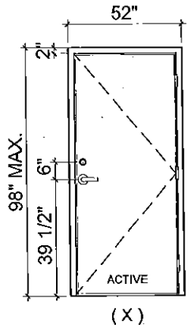

OPTION 4

SINGLE DOOR

ACTIVE LEAF:

DORMA CL700 CYLINDRICAL LOCKSET W/ (2) 8-32 X 1 3/8" PH MS AND (2) 8 X 3/4" FH MULTI THREAD SCREW
DORMA DB660 MORTISE DEADBOLT W/ (2) 10-32 X 2 9/16" OH MS AND (2) 8 X 3/4" FH MULTI THREAD SCREW

AT FRAME JAMB:
DEADBOLT STRIKE PLATE W/ (2) 8 X 3/4" FH MULTI THREAD SCREW
STRIKE PLATE W/ (2) 12 X 1" FH MULTI THREAD SCREW

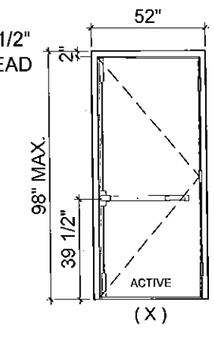

OPTION 5

SINGLE DOOR

ACTIVE LEAF:

DORMA 9400 SURFACE MOUNT METALLIC 2 POINT LOCK SYSTEM W/ ACTIVATING PANIC DEVICE AND VERTICAL RODS ON INTERIOR W/ (4) 12-24 X 1 1/2" FH MS; (4) 12-24 X 3/4" PH MS; (2) 12-24 X 3/4" OH MS AND SEX BOLT;
(1) SURFACE MOUNT METALLIC STRIKE PLATE (#426) AT FRAME HEAD ATTACHED W/ (2) 12-14 X 3/4" OH MS;
(1) SURFACE MOUNT METALLIC STRIKE PLATE (#439) AT THRESHOLD ATTACHED WITH SILICONE

Approved as complying with the Florida Building Code
Date 4/26/16
NOA# 15-0526.02
Miami Dade Product Control
By

MIAMI DADE COUNTY

YONG WANG
YONG WANG, P.E.
FLORIDA REGISTRATION
PE #55983
C.A.N. 28677
No. 55983
STATE OF FLORIDA
PROFESSIONAL ENGINEER

MAR 25 2016

REVISIONS		
NO	DATE	DESCRIPTION

MCY ENGINEERING, INC.
GLAZING CONSULTANTS
8501 SW 124 AVE. STE. 205A
MIAMI, FL 33183
P: 305.271.0117
F: 786.573.5063
www.MCYUS.com
MCY.Engineering@Att.net

GENSTORM OUTSWING 4888 HD OPAQUE STEEL DOOR (LMI & SMI)

gensteeldoors
www.gensteeldoors.com
4950 Hickmore, St. Laurent, Quebec, Canada, H4T1K6
Tel: (514) 733-3562 Fax: (514) 733-1932

DATE	12/24/14
SCALE	AS SHOWN
DRAWN	Joe
PROJECT	11-007

DRAWING NO.
AD15-35

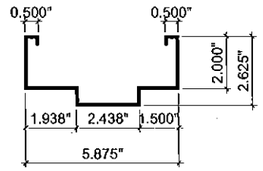

(2)&(3) FRAME HEAD AND JAMB
18 GA (.048") STEEL

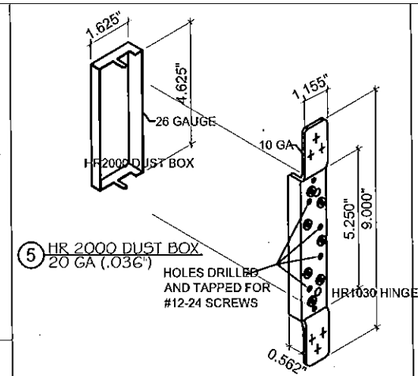

(5) HR 2000 DUST BOX
20 GA (.036")

(4) HR 1030 HINGE REINFORCEMENT
10 GA (.135") STEEL

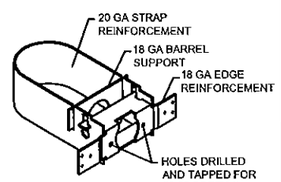

(6) DR1600
(CYLINDRICAL LOCK AND DEADBOLT REINFORCEMENT ASSEMBLY)
20 GA (.036") STEEL

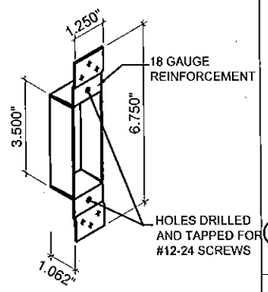

(8) FR 1100
ASA STRIKE BOX REINFORCEMENT
18 GA (.048") STEEL

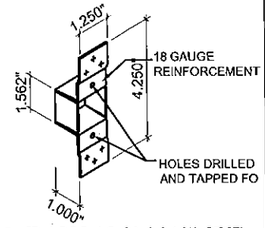

(9) FR 1000 18 GA (.048") STEEL
DEADBOLT STRIKE REINFORCEMENT

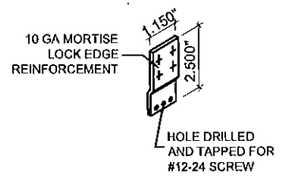

(11) DR 1700 10 GA (.135')
MORTISE LOCK EDGE REINFORCEMENT

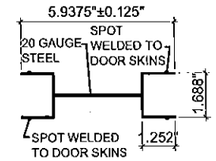

(21) WS2000 20 GA (.036')
STIFFENER

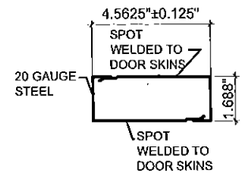

(22) WS1000 20 GA (.036')
STIFFENER

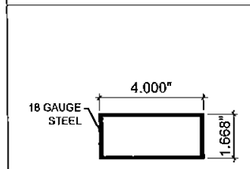

(13) LOCK SIDE BOX
18 GA (.048") STEEL

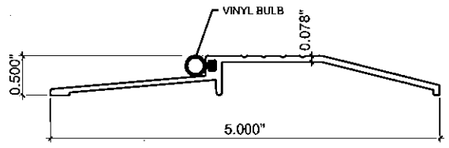

(19) NGP 950V
THRESHOLDS
ALUM. 6063-T5 MIN.

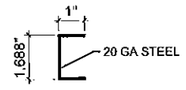

(20) CH90
LAMINATED STIFFENER

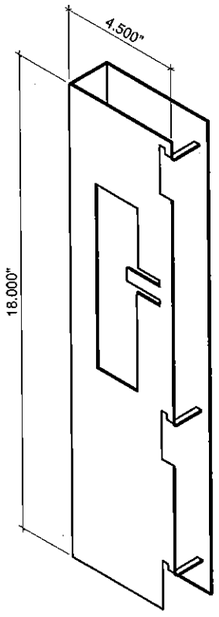

(12) DR1010
MORTISE BOX
4 1/2"x18"x18 GA. (.048")

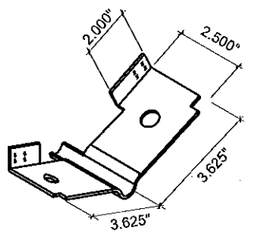

(24) FA3010 18 GA (.048") EMA
BUTTERFLY MASONRY ANCHOR

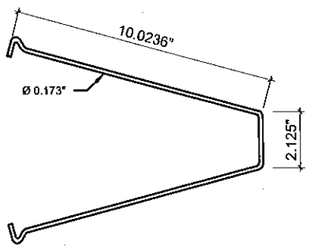

(25) FA3030 Fy = 60 KSI
MASONRY WIRE ANCHOR (STEEL)

(14) NGP 1065
PERIMETER SEAL

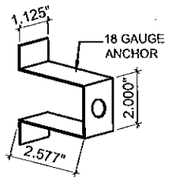

(26) FA3012 18 GA (.048")
MASONRY ANCHOR

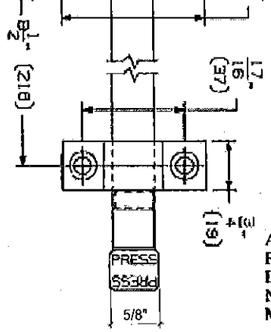

(10) IVES SB360
SURFACE BOLT

Approved complying with the Florida Building Code
Date 4/26/16
NOA# 15-0526.02
Miami Dade Product Control
By

(27) CH3601
18 GA (.048")
DOOR END CHANNEL

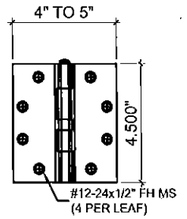

(7) 0.134" THIK STEEL HINGE

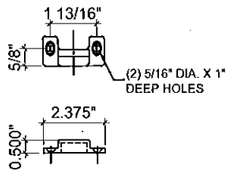

(28) #416 STRIKE
DORMA

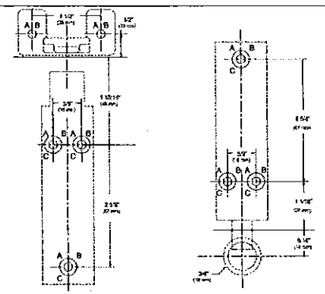

(29) DORMA 9400 STRIKES
DORMA

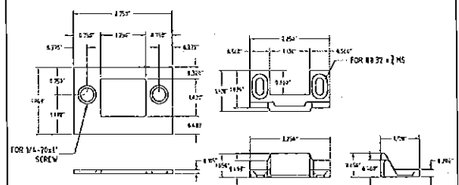

(30) DOREX 9500 STRIKES
DOREX

MIAMI DADE COUNTY

YIPING WANG
FLORIDA REGISTRATION
PE #55983
C.A.N. 28677
No. 55983
STATE OF FLORIDA
PROFESSIONAL ENGINEER

MAR 25 2016

REVISIONS	
NO.	DATE / DESCRIPTION

MCY ENGINEERING, INC.
GLAZING CONSULTANTS
8501 SW 124 AVE. STE. 205A
MIAMI, FL 33183
P: 305.271.0117
F: 786.573.5063
www.MCYUS.com
MCY.Engineering@Att.net

GENSTORM OUTSWING 4888 HD OPAQUE STEEL DOOR (LMI & SMI)

gensteeldoors
www.gensteeldoors.com
4950 Hickmore, St. Laurent, Quebec, Canada, H4T1K6
Tel: (514) 733-3562 Fax: (514) 733-1932

DATE	12/24/14
SCALE	AS SHOWN
DRAWN	Joe
PROJECT	11-007
DRAWING NO.	AD15-35

BILL OF MATERIALS

ITEM	PART NO.	MATERIAL	QTY.	DESCRIPTION	MANUFACTURER / SUPPLIER / REMARKS
1	-	STEEL OR ST / ST	2 PER PANEL	DOOR PANEL SKIN	GENSTEEL 20 GA. (0.038" MIN.) Fy=50 KSI MIN. Fu=53 KSI MIN.
2	-	STEEL OR ST / ST	1	FRAME HEAD 5 7/8" X 2"	GENSTEEL 18 GA. (0.048" MIN.) Fy=50 KSI MIN. Fu=53 KSI MIN.
3	-	STEEL OR ST/ST	2	FRAME JAMB 5 7/8" X 2"	GENSTEEL 18 GA. (0.048" MIN.) Fy=50 KSI MIN. Fu=53 KSI MIN.
4	HR1030	STEEL	4 PER LEAF	HINGE REINFORCEMENT	GENSTEEL 10 GA. (0.135" MIN.), SPOT WELDED TO FRAME AND DOOR
5	HR2000	STEEL	4 PER LEAF	HINGE DUST BOX	GENSTEEL 20 GA. (0.036" MIN.), SPOT WELDED
6	DR1600	STEEL	AS REQD.	CYLINDRICAL LOCK AND DEADBOLT REINFORCEMENT ASSEMBLY	GENSTEEL 20 GA. (0.036" MIN.), SPOT WELDED
7	HINGE	STEEL	4 PER LEAF	4 1/2" LONG HINGE	HAGER USA 0.134" MIN. THICKNESS
8	FR1100	STEEL	AS REQD.	ASA STRIKE BOX	GENSTEEL, 18 GA (0.048" MIN.) W/ (2) 12 X 7/8" FH MULTI THREAD SCREWS
9	FR1000	STEEL	AS REQD.	DEAD BOLT STRIKE REINFORCEMENT	GENSTEEL, 18 GA (0.048" MIN.) W/ (2) 8 X 3/4" FH SHEET METAL SCREWS
10	IVES SB360	STEEL	AS REQD.	SURFACE BOLTS AT INACTIVE PANEL	IVES
11	DR1700	STEEL	AS REQD.	MORTISE LOCK EDGE REINFORCEMENT WELDED	GENSTEEL 10 GA (0.135" MIN.), SPOT WELDED
12	DR1010	STEEL	AS REQD.	MORTISE BOX REINFORCEMENT	GENSTEEL 18 GA (0.048" MIN.)
13	-	STEEL	AS REQD.	18 GAUGE LOCK SIDE BOX REINFORCEMENT FULL LENGTH	(AT ACTIVE/INACTIVE STILES) GENSTEEL 18 GA (0.048" MIN.)
14	NGP 106S	ALUMINUM	3	PERIMETER GASKET	NATIONAL GUARD PRODUCTS W/ #6 X 3/4" FH SMS 10" O.C.
15	NGP 362	NEOPRENE	3	NEOPRENE TAPE	NATIONAL GUARD PRODUCTS
16	NGP 5050C	SILICONE	3	ADHESIVE GASKET	NATIONAL GUARD PRODUCTS
17	NGP 109NA	ALUMINUM	AS REQD.	MEETING ASTRAGAL	NATIONAL GUARD PRODUCTS W/ #6 X 5/8" FH SMS 6" O.C.
18	NGP 200NA	ALUMINUM	1 PER PANEL	DOOR BOTTOM SWEEP	NATIONAL GUARD PRODUCTS W/ #6 X 3/4" FH SMS 8" O.C.
19	NGP 950V	ALUMINUM	1 PER PANEL	BUMPER THRESHOLD W/ VINYL BULB	NATIONAL GUARD PRODUCTS
20	CH90	STEEL	AS REQD.	20 GAUGE LAMINATED STIFFENERS	GENSTEEL 20 GA (0.036" MIN)
21	WS2000	STEEL	AS REQD.	20 GAUGE WELDED STIFFENERS (HAT SECTION)	GENSTEEL, 20 GA (0.036" MIN.) SPOT WELDED TO BOTH DOOR SKINS
22	WS1000	STEEL	AS REQD.	20 GAUGE WELDED STIFFENERS	GENSTEEL, 20 GA (0.036" MIN.) SPOT WELDED TO BOTH DOOR SKINS
23	CORE (OPTION 1)	HONEYCOMB	AS REQD.	HONEYCOMB CORE INSIDE DOOR PANEL W/STIFFENERS	GENSTEEL
	CORE (OPTION 2)	FIBERGLASS	AS REQD.	FIBERGLASS CORE INSIDE DOOR PANEL W/STIFFENERS	JOHNS MANVILLE
	CORE (OPTION 3)	POLYURETHANE	AS REQD.	POLYURETHANE CORE INSIDE DOOR PANEL W/STIFFENERS	JOHNS MANVILLE
	CORE (OPTION 4)	POLYSTYRENE	AS REQD.	POLYSTYRENE CORE INSIDE DOOR PANEL W/STIFFENERS	LEGERLITE
	CORE (OPTION 5)	ROCKWOOL	AS REQD.	ROCKWOOL CORE INSIDE DOOR PANEL W/STIFFENERS	ROXUL
24	FA3010	STEEL	AS REQD.	BUTTERFLY MASONRY ANCHOR	GENSTEEL
25	FA3030	STEEL	AS REQD.	MASONRY WIRE ANCHOR 0.173" DIA.	GENSTEEL
26	FA3012	STEEL	AS REQD.	MASONRY ANCHOR BRACKET	GENSTEEL
27	CH3601	STEEL	2 PER PANEL	13/16" X 1-5/8" X 13/16" X 18 GA DOOR END FULL WIDTH CHANNEL	GENSTEEL 18 GA (0.048" MIN) PROGRESSION WELDED TO BOTH DOOR SKINS
28	416	STEEL	AS REQD.	STRIKE PLATE	DORMA
29	426 (TOP), 439 (BOTTOM)	STEEL	AS REQD.	DORMA 9400 STRIKE PLATES	DORMA
30	9500AS223 (TOP), 9500AS227 (BOTTOM)	STEEL	AS REQD.	DOREX 9500 STRIKE PLATES	DOREX

Approved as complying with the Florida Building Code
Date 4/26/16
NOA# 15-052602
Miami Dade Product Control
By Ishaq J. Ghani

MIAMI DADE COUNTY

LING WANG
LING WANG, PhD
FLORIDA REGISTRATION
LICENSE
PE #55983
C.A.N. 28677
No. 55983
STATE OF FLORIDA
PROFESSIONAL ENGINEER

MAR 25 2016

REVISIONS

NO	DATE	DESCRIPTION

MCY ENGINEERING, INC.
GLAZING CONSULTANTS
8501 SW 124 AVE. STE. 205A
MIAMI, FL 33183
P: 305.271.0117
F: 786.573.5063
www.MCYUS.com
MCY.Engineering@Att.net

GENSTORM OUTSWING 4868 HD OPAQUE STEEL DOOR (LMI & SMI)

genSteelDoors
www.gensteeldoors.com
4950 Hickmore, St. Laurent, Quebec, Canada. H4T1K6
Tel: (514) 733-3562 Fax: (514) 733-1932

DATE	12/24/14
SCALE	AS SHOWN
DRAWN	Joe
PROJECT	11-007

DRAWING NO.
AD15-35

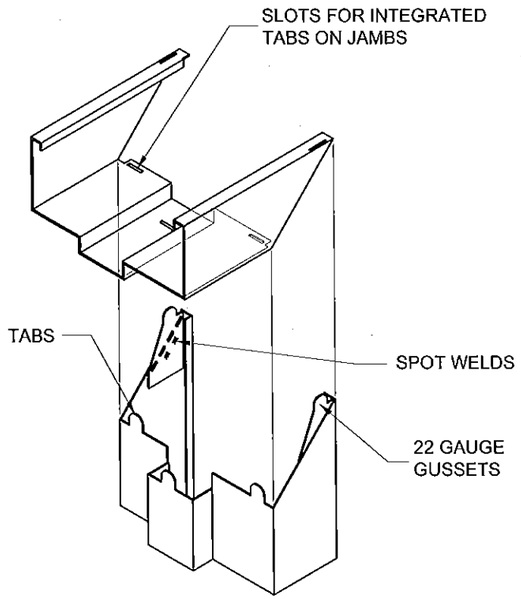

CORNER ASSEMBLY

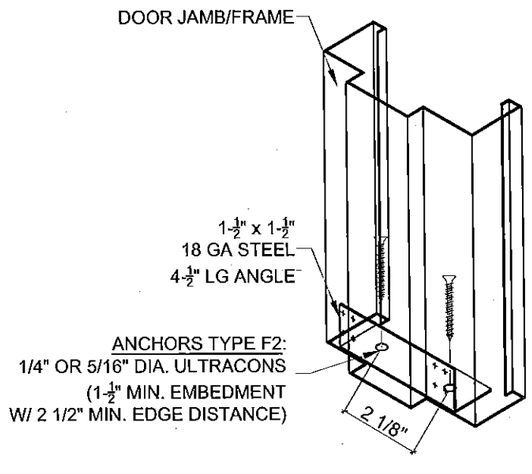

BOTTOM CORNER ANCHOR DETAIL
OPTIONAL

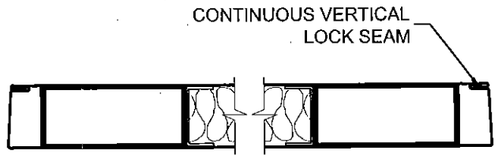

DOOR EDGE CONSTRUCTION
FOR ILLUSTRATION PURPOSES

THE JAMB AND HEAD MEETING CORNERS ARE
NOT REQUIRED TO BE WELDED TO EACH OTHER.
ALL THE FRAMES WERE TESTED AS "KNOCK-DOWN" UNITS.

Approved as complying with the
Florida Building Code
Date 4/26/16
NOA# 15-0526-02
Miami Dade Product Control
By Ishwaj I. Chandra

MIAMI DADE COUNTY

YIPING WANG
LICENSE
FLORIDA REGISTRATION
CE #55983
C.A.N. 28677
No. 55983
STATE OF
FLORIDA
PROFESSIONAL ENGINEER

MAR 25 2016

REVISIONS		
NO.	DATE	DESCRIPTION

MCY ENGINEERING, INC.
GLAZING CONSULTANTS
8501 SW 124 AVE. STE. 205A
MIAMI, FL 33183
P: 305.271.0117
F: 786.573.5063
www.MCYUS.com
MCY.Engineering@Att.net

GENSTORM OUTSWING 4888 HD OPAQUE STEEL DOOR (LMI & SMI)

gensteeldoors
www.gensteeldoors.com
4950 Hickmore, St. Laurent, Quebec, Canada, H4T1K6
Tel: (514) 733-3562 Fax: (514) 733-1932

DATE	12/24/14
SCALE	AS SHOWN
DRAWN	Joe
PROJECT	11-007

DRAWING NO.
AD15-35