MIAMI-DADE COUNTY
PRODUCT CONTROL SECTION
11805 SW 26 Street, Room 208
Miami, Florida 33175-2474
T (786) 315-2590 F (786) 315-2599
www.miamidade.gov/economy

DEPARTMENT OF REGULATORY AND ECONOMIC RESOURCES (RER)
BOARD AND CODE ADMINISTRATION DIVISION

NOTICE OF ACCEPTANCE (NOA)

Rupp Air Management Systems
101 North Industrial Parkway
West Union, IA 52175

SCOPE:

This NOA is being issued under the applicable rules and regulations governing the use of construction materials. The documentation submitted has been reviewed and accepted by Miami-Dade County RER-Product Control Section to be used in Miami Dade County and other areas where allowed by the Authority Having Jurisdiction (AHJ).

This NOA shall not be valid after the expiration date stated below. The Miami-Dade County Product Control Section (In Miami Dade County) and/or the AHJ (in areas other than Miami Dade County) reserve the right to have this product or material tested for quality assurance purposes. If this product or material fails to perform in the accepted manner, the manufacturer will incur the expense of such testing and the AHJ may immediately revoke, modify, or suspend the use of such product or material within their jurisdiction. RER reserves the right to revoke this acceptance, if it is determined by Miami-Dade County Product Control Section that this product or material fails to meet the requirements of the applicable building code.

This product is approved as described herein, and has been designed to comply with the Florida Building Code, including the High Velocity Hurricane Zone.

DESCRIPTION: Series DUHRA, NCARA, DRHRA, BDCRRA, DDARRA and DMUARA Aluminum Rooftop Fans

APPROVAL DOCUMENT: Drawing No. **EXHAUST**, titled "Upblast/Downblast/Curb", sheets 1 through 12 of 12, dated 08/25/2008, with revision 5 dated 05/06/2015, prepared by CaptiveAire Systems, Inc, signed and sealed by L. David Rice, P.E., bearing the Miami-Dade County Product Control approval stamp with the Notice of Acceptance number and approval date by the Miami-Dade County Product Control Section.

MISSILE IMPACT RATING: Large and Small Missile Impact Resistant

LABELING: Each unit shall bear a permanent label with the manufacturer's name or logo, one of the five manufacturing locations: Youngsville, NC or Muskogee, OK or Redding, CA or West Union, IA or Bedford, PA or Groveland, FL, model/series, and following statement: "Miami-Dade County Product Control Approved", unless otherwise noted herein.

LIMITATION: 1) These fans cannot be installed within the ridge area FBC 1523.6.5.2.13.

RENEWAL of this NOA shall be considered after a renewal application has been filed and there has been no change in the applicable building code negatively affecting the performance of this product.

TERMINATION of this NOA will occur after the expiration date or if there has been a revision or change in the materials, use, and/or manufacture of the product or process. Misuse of this NOA as an endorsement of any product, for sales, advertising or any other purposes shall automatically terminate this NOA. Failure to comply with any section of this NOA shall be cause for termination and removal of NOA.

ADVERTISEMENT: The NOA number preceded by the words Miami-Dade County, Florida, and followed by the expiration date may be displayed in advertising literature. If any portion of the NOA is displayed, then it shall be done in its entirety.

INSPECTION: A copy of this entire NOA shall be provided to the user by the manufacturer or its distributors and shall be available for inspection at the job site at the request of the Building Official.

This NOA consists of this page 1 and evidence pages E-1 and E-2, as well as approval document mentioned above.

The submitted documentation was reviewed by **Carlos M. Utrera, P.E.**

MIAMI-DADE COUNTY APPROVED

09/30/2015

NOA No. 15-0526.08
Expiration Date: March 4, 2019
Approval Date: October 8, 2015

NOTICE OF ACCEPTANCE: EVIDENCE SUBMITTED

A. DRAWINGS

1. Drawing No. **EXHAUST**, titled "Upblast/Downblast/Curb", sheets 1 through 12 of 12, dated 08/25/2008, with revision 5 dated 05/06/2015, prepared by CaptiveAire Systems, Inc, signed and sealed by L. David Rice, P.E.

B. TESTS *"Submitted under NOA # 14-0722.16"*

1. Test reports on Uniform Static Air Pressure Test, Loading per FBC TAS 202-94 along with marked-up drawings and installation diagram of Centrifugal Upblast Roof Mounted Exhaust Fans (Model NCA36FA), prepared by Intertek/Architectural Testing, Inc., Test Report No. **E6374.01-109-18**, dated 04/16/2015, signed and sealed by Michael D. Stremmel, P.E.
2. Test reports on Uniform Static Air Pressure Test, Loading per FBC TAS 202-94 along with marked-up drawings and installation diagram of Centrifugal Downblast Roof Mounted Exhaust Fans (Model DD36FA), prepared by Intertek/Architectural Testing, Inc., Test Report No. **E6373.01-109-18**, dated 04/16/2015, signed and sealed by Michael D. Stremmel, P.E.
3. Test reports on 1) Uniform Static Air Pressure Test, Loading per FBC TAS 202-94
   2) Large Missile Impact Test per FBC, TAS 201-94
   3) Cyclic Wind Pressure Loading per FBC, TAS 203-94

   along with marked-up drawings and installation diagram of Motorized Exhaust Vent (Model DU10), prepared by Architectural Testing, Inc., Test Report No. **E1562.01-109-18**, dated 11/13/2014, signed and sealed by Michael D. Stremmel, P.E.

"Submitted under NOA # 08-1124.09"

4. Test reports on 1) Uniform Static Air Pressure Test, Loading per FBC TAS 202-94
   2) Large Missile Impact Test per FBC, TAS 201-94
   3) Cyclic Wind Pressure Loading per FBC, TAS 203-94

   along with marked-up drawings and installation diagram of Series/Model HRE-24, high velocity roof fan, BI-36CARM, roof mounted exhaust fan and A5-925, modular down discharge blower, prepared by Architectural Testing, Inc., Test Report No. **83747.01-109-18**, dated 10/15/2008, with Revision 1 dated 01/06/2009, signed and sealed by Michael D. Stremmel, P.E.

09/30/2015

Carlos M. Utrera, P.E.
Product Control Examiner
NOA No. 15-0526.08
Expiration Date: March 4, 2019
Approval Date: October 8, 2015

NOTICE OF ACCEPTANCE: EVIDENCE SUBMITTED

C. CALCULATIONS ***"Submitted under NOA # 14-0722.16"***

1. Anchor verification calculations prepared by Rice Engineering, dated 08/07/2015, signed and sealed by L. David Rice, P.E.

"Submitted under NOA # 14-0110.04"

2. Anchor verification calculations, prepared by Rice Engineering, dated 07/04/2012, signed and sealed by L. David Rice, P.E.

"Submitted under NOA # 08-1124.09"

3. Anchor verification calculations, prepared by Rice Engineering, dated 11/12/2008, with revision dated 01/20/2008, signed and sealed by L. David Rice, P.E.

D. QUALITY ASSURANCE

1. Miami-Dade Department of Regulatory and Economic Resources (RER)

E. MATERIAL CERTIFICATIONS

1. None.

F. STATEMENTS

1. Statement letter of code conformance to the 5th edition (2014) FBC issued by Rice Engineering, dated 08/07/2015, signed and sealed by L. David Rice, P.E.
2. Private labeling agreement dated 03/17/2015.

"Submitted under NOA # 13-0219.01"

3. Statement letter of code conformance to 2010 FBC issued by Rice Engineering, dated 07/04/2012, signed and sealed by L. David Rice, P.E.
4. Statement letter of no financial interest issued by Rice Engineering, dated 07/04/2012, signed and sealed by L. David Rice, P.E.

09/30/2015

Carlos M. Utrera, P.E.
Product Control Examiner
NOA No. 15-0526.08
Expiration Date: March 4, 2019
Approval Date: October 8, 2015

Dimensional Data - Upblast Aluminum Fans

Revision History				
#	Description	Revised by	ECN#	Date
0	Testing TAS - 201, 202, 203	N Perry	1446	8/25/08
1	Changes Per Dade County	N Perry	1446	12/30/08
2	HRE Dim Changes	N Perry	2181	11/19/10
3	Added DU/DR Models	J Hess	2661	6/24/14
4	Increased Design Pressure +/- 150 PSF	WBG	2753	9/9/14
5	Added Curb Heights	JJH	2740	5/6/15

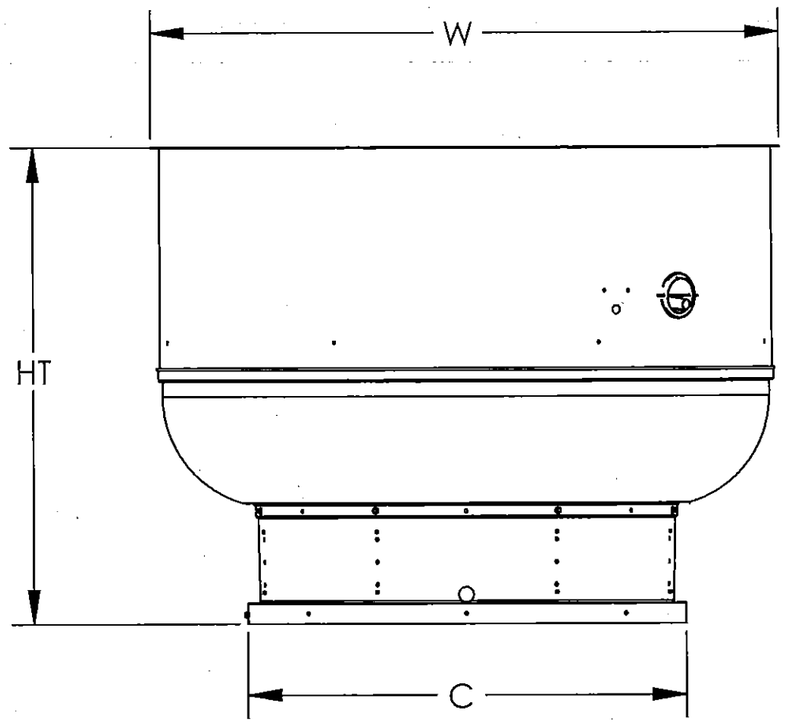

General Notes:

1. This approval is for the structural capacity and impact rating of the exterior housing only; it does not include any interior mechanisum or electrical part.
2. These fans have not been wind tested for Wind Driven Rain Test per Florida Building code, TAS100 (A)-95.

FAN MODEL	HT (in)	W (in)	C (in)	WEIGHT (lbs)
DU10HRA	14-1/2	17-3/4	19	30
DU12HRA	18	22	19	40
DU25HRA	25-1/4	25-1/2	21	50
DU30HRA	25-1/4	25-1/2	21	50
DU33HRA	25-1/4	25-1/2	21	50
DU50HRA	27-1/4	28-7/8	21	55
DU75HRA	30-1/2	31-7/8	24-3/4	60
DU85HRA	30-1/2	31-7/8	24-3/4	60
DU180HRA	33-3/4	39-3/8	28	190
DU200HRA	33-3/4	38-7/8	28	195
DU240HRA	37-1/2	43 3/8	33	270
DU300HRA	40	52-3/4	40	410
DU360HRA	45-9/16	63-7/16	44	470
NCA08RA	25-1/4	27-1/4	21	105
NCA10RA	27-1/4	30-1/4	21	120
NCA14RA	30-1/2	33-3/4	24-3/4	140
NCA16RA	33-3/4	39-3/8	28	190
NCA18RA	33-3/4	38-7/8	28	195
NCA24RA	37-1/2	43 3/8	33	270
NCA30RA	40	52-3/4	40	410
NCA36RA	45-9/16	63-7/16	44	470

RICE ENGINEERING
105 School Creek Trail
Luxemburg, WI 54217
Phone 920.845 1042
Fax 920.845 1048
www.rice-inc.com

Florida Firm No. F-01000005061
Certificate of Authorization #9090
L. David Rice
Registration No: 50923

DESIGN PRESSURE: +150.0 / -150.0 PSF

LARGE MISSILE IMPACT RESISTANT

Notes:
1. Tested in accordance to Florida Building Code test protocol TAS-201, TAS-202, TAS203.
2. Tested for areas including high velocity hurricane zones.
3. Tested under Miami-Dade County Notification number ATI 08033.

Rupp Air Management Systems
101 North Industrial Parkway West
Union, IA 52175
P 800.334.9256 / 919.227.5994

Approved as complying with the Florida Building Code
Date 10/08/2015
NOA# 15-0526.08
Miami Dade Product Control
By

L. DAVID RICE LICENSE No. 50923 STATE OF FLORIDA PROFESSIONAL ENGINEER

AUG 07 2015

Material: N/A	Part Number: N/A	Unless Otherwise Specified Dimensions are in Inches.
Blank Size: N/A x N/A	MACOLA Number: N/A	Standard Tolerances are: Fractions: ±1/16 Decimal: .XX±.05 .XXX±.015 Angles: ±1°
Weight: N/A lbs	Drawing Name: UPBLAST	
	Drawn By: N Perry	
	Drawing Number: EXHAUST01	
	Sheet: 1 of 12	

RUPP AIR MANAGEMENT SYSTEMS®

Exploded Material View - Upblast Aluminum Fans

Revision History				
#	Description	Revised by	ECN#	Date
0	Testing TAS - 201, 202, 203	N Perry	1446	8/25/08
1	Changes Per Dade County	N Perry	1446	12/30/08
2	HRE Dim Changes	N Perry	2181	11/19/10
3	Added DU/DR Models	J Hess	2661	6/24/14
4	Increased Design Pressure +/- 150 PSF	WBG	2753	9/9/14
5	Added Curb Heights	JJH	2740	5/6/15

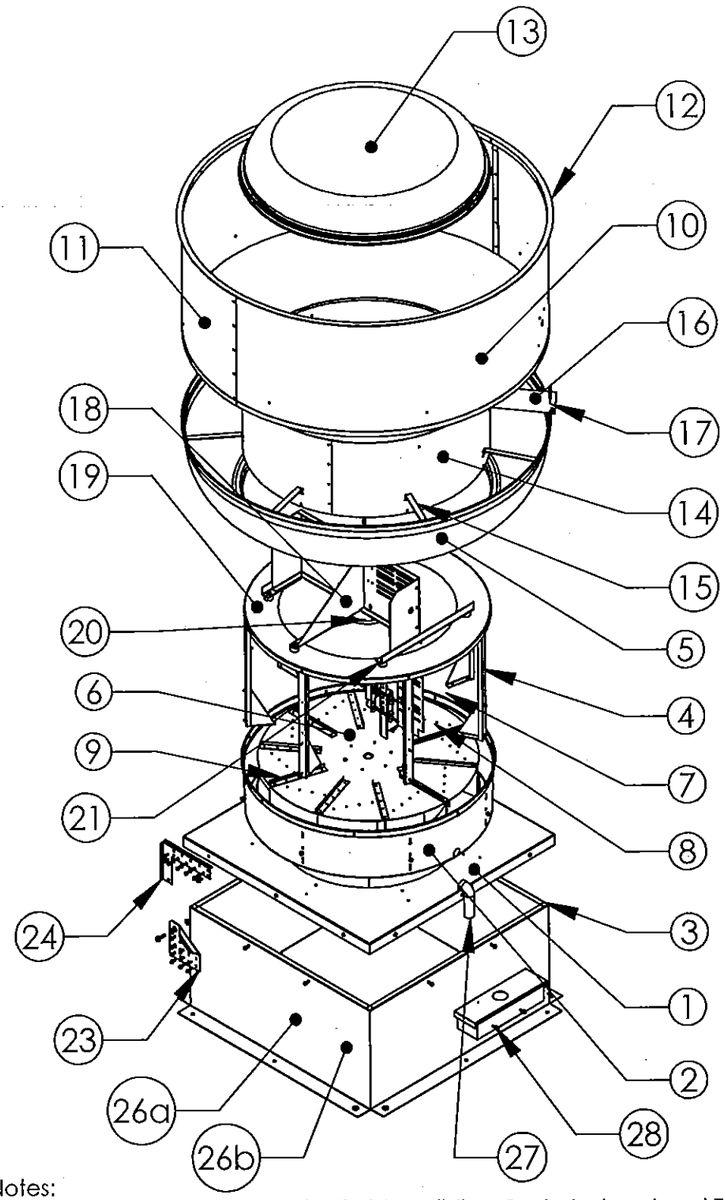

Item Number	Description	Material
1	Base	16 Ga Galvanized G90
2	Baffle	.080 Aluminum 1100-0
3	Gusset	12 Ga Galvanized G90
4	Vertical Support	12 Ga Galvanized G90
5	Bottom Skirt	.090 Aluminum 1100-0
6	Wheel Blade Top (Not Shown)	14 Ga Galvanized G90
7	Wheel Blade Bottom	.100 Aluminum 3003-0
8	Wheel Primary Blade	.125 Aluminum 5052-H32
9	Wheel Secondary Blade (Not Shown)	.064 Aluminum 5052-H32
10	Top Skirt A	.080 Aluminum 1100-H14
11	Top Skirt B	.080 Aluminum 1100-H14
12	Angle Ring	1/8 X 1 X 1 Aluminum Angle Ring
13	Hood	.064 Aluminum 1100-H14
14	Shaft Wrapper	.080 Aluminum 1100-H14
15	Horizontal Braces	.125 Aluminum 5052-H32
16	Cooling Tube	.080 Aluminum Extrusion
17	Cooling Tube Grommet	Black Rubber
18	Motor Plate Assembly	10 Ga Galvanized G90
19	Top Plate	14 Ga Galvanized G90
20	Shaft (Not Shown)	1018 Steel
21	Vibration Isolators	Black Rubber
22	Fan Plate Left (Hinge Kit)	10 Ga Galvanized G90
23	Curb Plate Left (Hinge Kit)	10 Ga Galvanized G90
24	Fan Plate Right (Hinge Kit Not Shown)	10 Ga Galvanized G90
25	Curb Plate Right (Hinge Kit Not Shown)	10 Ga Galvanized G90
26a	Curb (Up to 20" Height)	20 Ga Steel
26b	Curb (Above 20" up to 42" Height)	16 Ga Steel
27	Grease Down Spout	Aluminum Colored Vinyl
28	Grease Box	18 Ga Galvanized G90

RICE ENGINEERING
105 School Creek Trail
Luxemburg, WI 54217
Phone 920.845.1042
Fax 920.845.1048
www.rice-inc.com

Florida Firm No F-01000005061
Certificate of Authorization: #9090
L David Rice
Registration No 50923

L. DAVID RICE LICENSE No. 50923 STATE OF FLORIDA PROFESSIONAL ENGINEER

Notes:
1. Tested in accordance to Florida Building Code test protocol TAS-201, TAS-202, TAS203.
2. Tested for areas including high velocity hurricane zones.
3. Tested under Miami-Dade County Notification number ATI 08033.

Rupp Air Management Systems
101 North Industrial Parkway West
Union, IA 52175
P 800.334.9256 / 919.227.5994

Approved as complying with the Florida Building Code
Date 10/08/2015
NOA# 15-0526.08
Miami Dade Product Control
By

AUG 0 7 2015

Material: N/A	Part Number: N/A	Unless Otherwise Specified Dimensions are in Inches.
Blank Size: N/A x N/A	MACOLA Number: N/A	Standard Tolerances are: Fractions: ±1/16 Decimal: .XX±.05 .XXX±.015 Angles: ±1°
Weight: N/A lbs	Drawing Name: UPBLAST	
	Drawn By: N Perry	
	Drawing Number: EXHAUST02	
	Sheet: 2 of 12	

RUPP AIR MANAGEMENT SYSTEMS®

Installation - Upblast Aluminum Fans

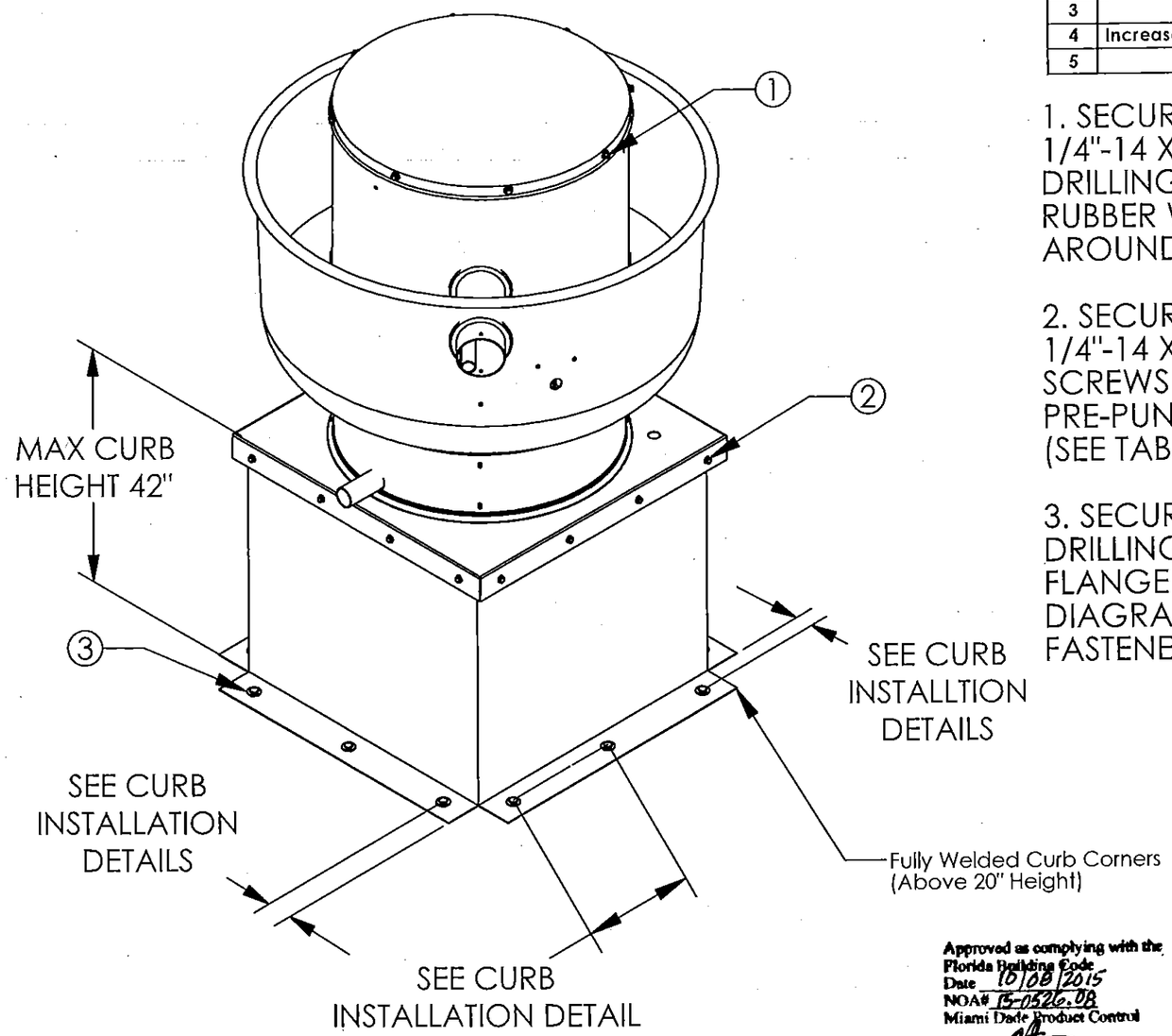

Revision History				
#	Description	Revised by	ECN#	Date
0	Testing TAS - 201, 202, 203	N Perry	1446	8/25/08
1	Changes Per Dade County	N Perry	1446	12/30/08
2	HRE Dim Changes	N Perry	2181	11/19/10
3	Added DU/DR Models	J Hess	2661	6/24/14
4	Increased Design Pressure +/- 150 PSF	WBG	2753	9/9/14
5	Added Curb Heights	JJH	2740	5/6/15

1. SECURE LID TO FAN USING (8) 1/4"-14 X 1" ZINC PLATED STEEL SELF DRILLING SHEET METAL SCREWS WITH RUBBER WASHER SPACED EVENLY AROUND LID.

2. SECURE FAN BASE TO CURB USING 1/4"-14 X 2" GALVANIZED SELF DRILLING SCREWS (A307 OR BETTER) THROUGH PRE-PUNCHED HOLES IN THE FAN BASE. (SEE TABLE A ON PAGE 7 THRU 12 FOR QTY).

3. SECURE CURB TO ROOF OR WALL BY DRILLING 1/4" DIA PILOT HOLES IN THE CURB FLANGE AT LOCATIONS SHOWN IN THE DIAGRAM. SEE PAGES 7 THRU 12 FOR FASTENER TYPE. USE TABLE B FOR FASTENER QTY.

RICE ENGINEERING
105 School Creek Trail
Luxemburg, WI 54217
Phone 920.845 1042
Fax 920.845 1048
www.rice-inc.com

Florida Firm No F-01000005061
Certificate of Authorization #9090
L. David Rice
Registration No: 50923

Approved as complying with the Florida Building Code
Date 10/08/2015
NOA# 15-0526.08
Miami Dade Product Control
By

Rupp Air Management Systems
101 North Industrial Parkway West
Union, IA 52175
P 800.334.9256 / 919.227.5994

L. DAVID RICE LICENSE No. 50923 STATE OF FLORIDA PROFESSIONAL ENGINEER

AUG 07 2015

Notes:
1. Tested in accordance to Florida Building Code test protocol TAS-201, TAS-202, TAS203.
2. Tested for areas including high velocity hurricane zones.
3. Tested under Miami-Dade County Notification number ATI 08033.

Material: N/A	Part Number: N/A	Unless Otherwise Specified Dimensions are in Inches.
Blank Size: N/A x N/A	MACOLA Number: N/A	Standard Tolerances are: Fractions: ±1/16 Decimal: .XX±.05 .XXX±.015 Angles: ±1°
Weight: N/A lbs	Drawing Name: UPBLAST	
	Drawn By: N Pery	
	Drawing Number: EXHAUST03	
	Sheet: 3 of 12	

RUPP AIR MANAGEMENT SYSTEMS®

Dimensional Data - Downblast Aluminum Fans

Revision History				
#	Description	Revised by	ECN#	Date
0	Testing TAS - 201, 202, 203	N Perry	1446	8/25/08
1	Changes Per Dade County	N Perry	1446	12/30/08
2	HRE Dim Changes	N Perry	2181	11/19/10
3	Added DU/DR Models	J Hess	2661	6/24/14
4	Increased Design Pressure +/- 150 PSF	WBG	2753	9/9/14
5	Added Curb Heights	JJH	2740	5/6/15

General Notes:

1. This approval is for the structural capacity and impact rating of the exterior housing only; it does not include any interior mechanisum or electrical part.
2. These fans have not been wind tested for Wind Driven Rain Test per Florida Building code, TAS100 (A)-95.

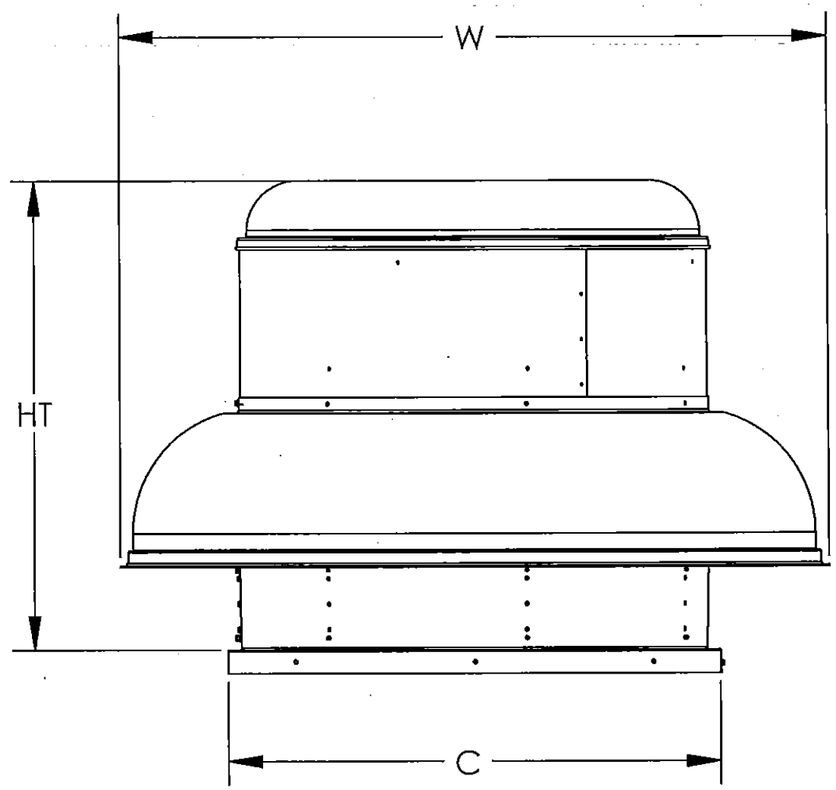

FAN MODEL	HT (in)	W (in)	C (in)	WEIGHT (lbs)
DR10HRA	14 1/2	20 3/4	19	30
DR12HRA	16 1/4	23 3/4	19	35
DR25HRA	19 1/8	26 1/4	21	45
DR30HRA	19/1/8	26 1/4	21	45
DR33HRA	19 1/8	26 1/4	21	45
DR50HRA	21 3/4	29 3/4	21	50
DR75HRA	23 3/8	33 1/4	24 3/4	60
DR85HRA	23 3/8	33 1/4	24 3/4	60
DR180HRA	32 3/4	38 1/4	28	190
DR200HRA	32 3/4	38 1/4	28	195
DR240HRA	37 3/4	42 1/2	33	215
DR300HRA	40	52	40	380
DR360HRA	45 9/16	63 7/16	44	470
BDCR7RA	25 1/2	26 1/4	21	90
BDCR8RA	25 1/2	26 1/4	21	90
BDCR9RA	25 1/2	26 1/4	21	90
BDCR11RA	25 1/2	26 1/4	21	105
BDCR13RA	27 1/4	29 5/8	21	105
BDCR15RA	30 5/8	33 1/4	24 3/4	130
BDCR18RA	32 3/4	38 1/4	28	190
BDCR20RA	32 3/4	38 1/4	28	195
BDCR24RA	37 3/4	42 1/2	33	215
BDCR30RA	40	52	40	380
BDCR36RA	45 9/16	63 7/16	44	470
DDAR10RA	9 3/4	18 5/16	19	24
DDAR12RA	10 1/4	20 5/16	19	32
DDAR14RA	12 5/8	27 5/16	21	45
DDAR18RA	14 3/8	33 9/16	26	67
DMUA14RA	12 5/8	27 5/16	21	45
DMUA18RA	14 3/8	33 9/16	26	67

RICE ENGINEERING
105 School Creek Trail
Luxemburg, WI 54217
Phone 920.845.1042
Fax 920.845.1048
www.rice-inc.com

Florida Firm No. F-01000005061
Certificate of Authorization #9090
L. David Rice
Registration No: 50923

DESIGN PRESSURE: +150.0 / -150.0 PSF

LARGE MISSILE IMPACT RESISTANT

Notes:
1. Tested in accordance to Florida Building Code test protocol TAS-201, TAS-202, TAS203.
2. Tested for areas including high velocity hurricane zones.
3. Tested under Miami-Dade County Notification number ATI 08033.

Approved as complying with the Florida Building Code
Date 10/09/2015
NOA# 15-0526.08
Miami Dade Product Control
By

Rupp Air Management Systems
101 North Industrial Parkway West
Union, IA 52175
P 800.334.9256 / 919.227.5994

L. DAVID RICE LICENSE No. 50923 STATE OF FLORIDA PROFESSIONAL ENGINEER

AUG 07 2015

Material: N/A	Part Number: N/A	Unless Otherwise Specified Dimensions are in Inches.
Blank Size: N/A x N/A	MACOLA Number: N/A	Standard Tolerances: Fractions: ±1/16 Decimal: .XX±.05 .XXX±.015 Angles: ±1°
Weight: N/A lbs	Drawing Name: DOWNBLAST	
	Drawn By: N Perry	
	Drawing Number: EXHAUST04	
	Sheet: 4 of 12	

RUPP AIR MANAGEMENT SYSTEMS®

Exploded Material View - Downblast Aluminum Fans

Revision History				
#	Description	Revised by	ECN#	Date
0	Testing TAS - 201, 202, 203	N Perry	1446	8/25/08
1	Changes Per Dade County	N Perry	1446	12/30/08
2	HRE Dim Changes	N Perry	2181	11/19/10
3	Added DU/DR Models	J Hess	2661	6/24/14
4	Increased Design Pressure +/- 150 PSF	WBG	2753	9/9/14
5	Added Curb Heights	JJH	2740	5/6/15

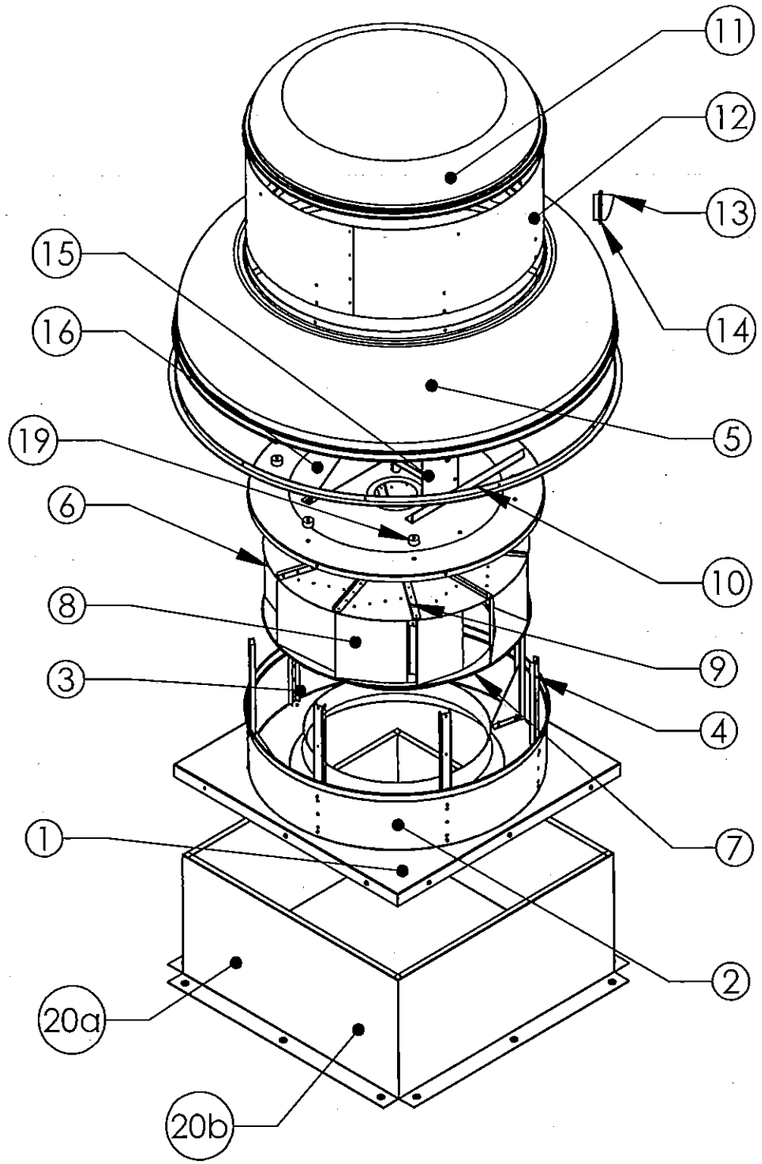

Item Number	Description Of Part	Material
1	Base	16 Ga Galvanized G90
2	Baffle	.080 Aluminum 1100-0
3	Gusset	12 Ga Galvanized G90
4	Vertical Support	12 Ga Galvanized G90
5	Bottom Skirt	.090 Aluminum 1100-0
6	Wheel Blade Top	14 Ga Galvanized G90
7	Wheel Blade Bottom	.100 aluminum 3003-0
8	Wheel Primary Blade	.125 Aluminum 5052-H32
9	Wheel Secondary Blade	.064 Aluminum 5052-H32
10	Ring	1/8 X 1 X 1 Aluminum Angle Ring
11	Hood	.064 Aluminum 1100-H14
12	Shaft Wrapper	.080 Aluminum 1100-H14
13	Cooling Tube	.080 Aluminum Extrusion
14	Cooling Tube Grommet	Black Rubber
15	Motor Plate Assembly	10 Ga Galvanized G90
16	Top Plate	14 Ga Galvanized G90
17	Shaft (Not Shown)	1018 Steel
18	Bearings (Not Sown)	Case Steel/ Steel Ball
19	Vibration Isolators	Black Rubber
20a	Curb (Up to 20" Height)	20 Ga Steel
20b	Curb (Above 20" Up to 42" Height)	16 Ga Steel

RICE ENGINEERING
105 School Creek Trail
Luxemburg, WI 54217
Phone 920.845.1042
Fax 920.845.1048
www.rice-inc.com

Florida Firm No F-01000005061
Certificate of Authorization: #9090
L David Rice
Registration No: 50923

L. DAVID RICE LICENSE No. 50923 STATE OF FLORIDA PROFESSIONAL ENGINEER

AUG 0 7 2015

Rupp Air Management Systems
101 North Industrial Parkway West
Union, IA 52175
P 800.334.9256 / 919.227.5994

Approved as complying with the Florida Building Code
Date 10/08/2015
NOA# 15-0526.08
Miami Dade Product Control
By

Notes:
1. Tested in accordance to Florida Building Code test protocol TAS-201, TAS-202, TAS203.
2. Tested for areas including high velocity hurricane zones.
3. Tested under Miami-Dade County Notification number ATI 08033.

Material: N/A	Part Number: N/A
Blank Size: N/A x N/A	MACOLA Number: N/A
Weight: N/A lbs	Drawing Name: DOWNBLAST
	Drawn By: N Perry
	Drawing Number: EXHAUST05
	Sheet: 5 of 12

Unless Otherwize Specified Dimensions are in Inches.
Standard Tolerances are:
Fractions: ±1/16
Decimal: .XX±.05
.XXX±.015
Angles: ±1°

RUPP AIR MANAGEMENT SYSTEMS®

Installation - Downblast Aluminum Fans

Revision History				
#	Description	Revised by	ECN#	Date
0	Testing TAS - 201, 202, 203	N Perry	1446	8/25/08
1	Changes Per Dade County	N Perry	1446	12/30/08
2	HRE Dim Changes	N Perry	2181	11/19/10
3	Added DU/DR Models	J Hess	2661	6/24/14
4	Increased Design Pressure +/- 150 PSF	WBG	2753	9/9/14
5	Added Curb Heights	JJH	2740	5/6/15

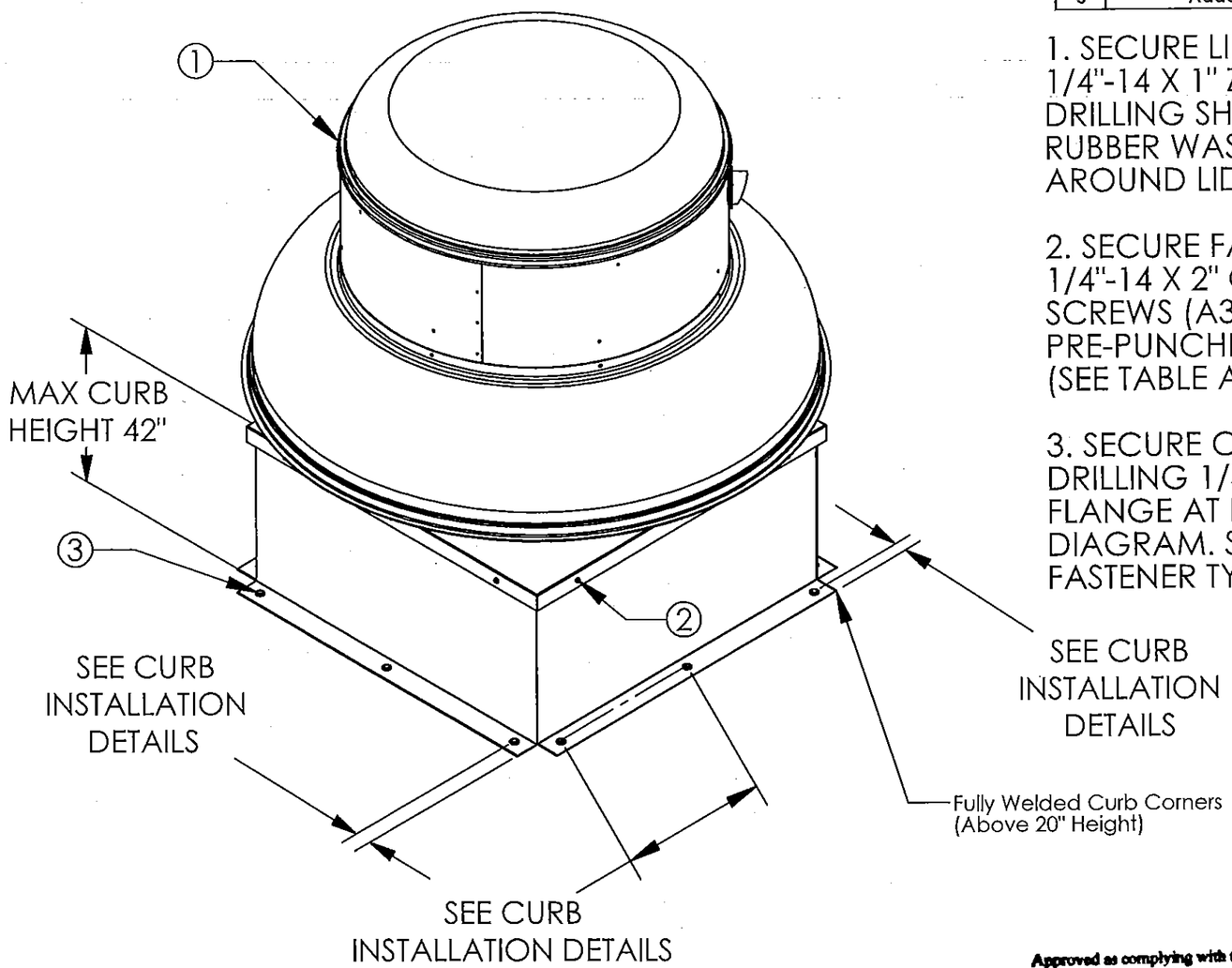

1. SECURE LID TO FAN USING (8) 1/4"-14 X 1" ZINC PLATED STEEL SELF DRILLING SHEET METAL SCREWS WITH RUBBER WASHER SPACED EVENLY AROUND LID.

2. SECURE FAN BASE TO CURB USING 1/4"-14 X 2" GALVANIZED SELF DRILLING SCREWS (A307 OR BETTER) THROUGH PRE-PUNCHED HOLES IN THE FAN BASE. (SEE TABLE A ON PAGE 7 THRU 12 FOR QTY).

3. SECURE CURB TO ROOF OR WALL BY DRILLING 1/4" DIA PILOT HOLES IN THE CURB FLANGE AT LOCATIONS SHOWN IN THE DIAGRAM. SEE PAGES 7 THRU 12 FOR FASTENER TYPE. USE TABLE B FOR FASTENER QTY.

RICE ENGINEERING
105 School Creek Trail
Luxemburg, WI 54217
Phone 920.845.1042
Fax 920.845.1048
www.rice-inc.com

Florida Firm No. F-01000005061
Certificate of Authorization: #9090
L. David Rice
Registration No. 50923

L. DAVID RICE LICENSED No. 50923 STATE OF FLORIDA PROFESSIONAL ENGINEER

Notes:
1. Tested in accordance to Florida Building Code test protocol TAS-201, TAS-202, TAS203.
2. Tested for areas including high velocity hurricane zones.
3. Tested under Miami-Dade County Notification number ATI 08033.

Approved as complying with the Florida Building Code
Date 10/08/2015
NOA# 15-0526.08
Miami Dade Product Control
By

Rupp Air Management Systems
101 North Industrial Parkway West
Union, IA 52175
P 800.334.9256 / 919.227.5994

AUG 07 2015

Material: N/A	Part Number: N/A	Unless Otherwize Specified Dimensions are in Inches.
Blank Size: N/A x N/A	MACOLA Number: N/A	Standard Tolerances are: Fractions: ±1/16 Decimal: .XX±.05 .XXX±.015 Angles: ±1°
Weight: N/A lbs	Drawing Name: DOWNBLAST	
	Drawn By: N Perry	
	Drawing Number: EXHAUST06	
	Sheet: 6 of 12	

RUPP AIR MANAGEMENT SYSTEMS®

Miami-Dade County - Roof Curb
Installation Guide For Wood Substrate

Rupp Air Management Systems
101 North Industrial Parkway West
Union, IA 52175
P 800.334.9256 / 919.227.5994

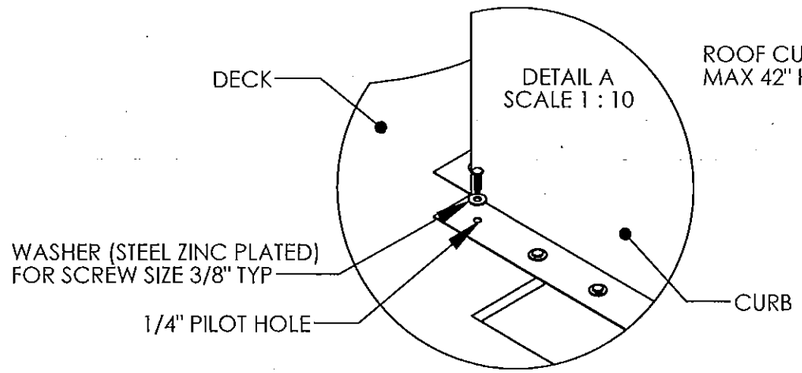

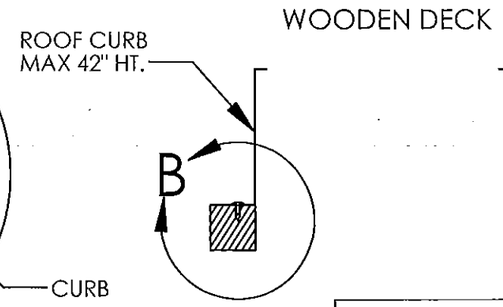

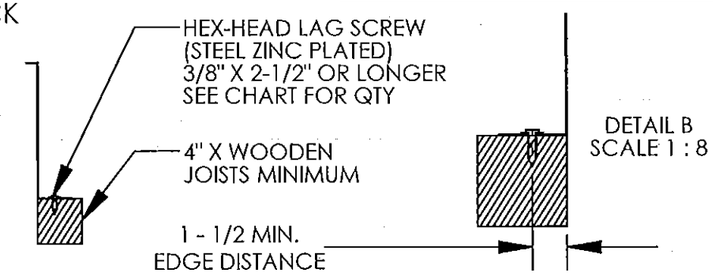

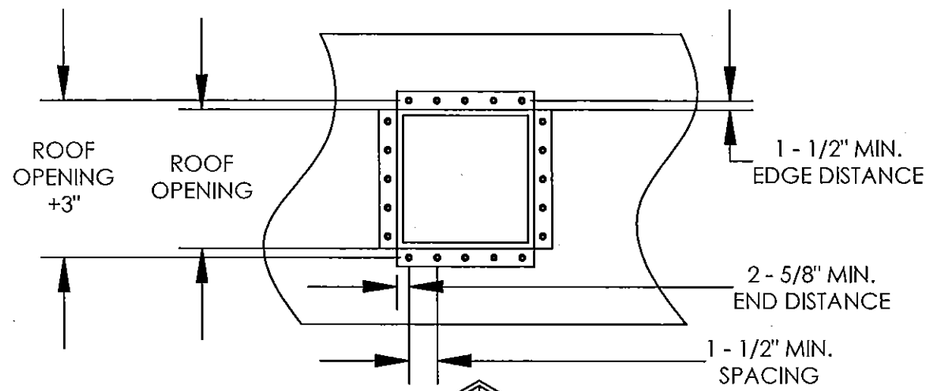

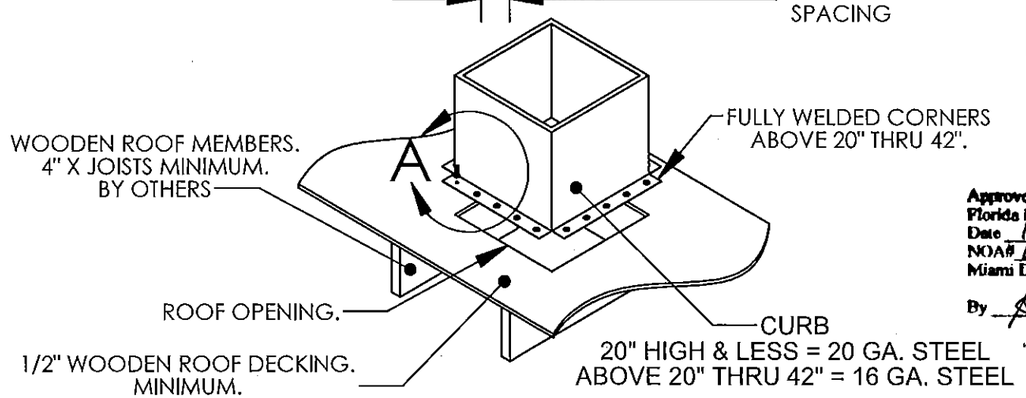

TABLE A: FAN TO CURB

Unit Size - Model RA	Base Size	Curb Size	Fasteners	
			Per Side	Total
DU10, DU12 / DR10, DR12 / DDAR10, DDAR12	19"	17 - 1/2"	3	12
DU25, DU30, DU33, DU50, NCA08, NCA10 / DR25, DR30, DR33, DR50, DD7, DD8, DD9, DD11, DD13 / DDAR14, DMUA14	21"	19 - 1/2"	3	12
DU75, DU85, NCA14 / DR75, DR85, DD15	24 - 3/4"	23"	3	12
DDAR18, DMUA18	26"	24 - 1/2"	3	12
DU180, DU200, NCA16, NCA18 / DR180, DR200, DD18, DD20	28"	26 - 1/2"	3	12
DU240, NCA24 / DR240, DD24	33"	31 - 1/2"	3	12
DU300, NCA30 / DR300, DD30	40"	38 - 1/2"	3	12
DU360, NCA36 / DR360, DD36	44"	42 - 1/2"	4	16

TABLE B: CURB TO DECK

Unit Size - Model RA	Wood	
	Per Side	Total
DU10, DU12 / DR10, DR12 / DDAR10, DDAR12	3	12
DU25, DU30, DU33, DU50, NCA08, NCA10 / DR25, DR30, DR33, DR50, DD7, DD8, DD9, DD11, DD13 / DDAR14, DMUA14	3	12
DU75, DU85, NCA14 / DR75, DR85, DD15	4	16
DDAR18, DMUA18	5	20
DU180, DU200, NCA16, NCA18 / DR180, DR200, DD18, DD20	5	20
DU240, NCA24 / DR240, DD24	6	24
DU300, NCA30 / DR300, DD30	7	28
DU360, NCA36 / DR360, DD36	10	40

Approved as complying with the Florida Building Code
Date 10/08/2015
NOA# 15-0526.08
Miami Dade Product Control
By

RICE ENGINEERING
105 School Creek Trail
Luxemburg WI 54217
Phone 920.845.1042
Fax 920.845.1048
www.rice-inc.com

Florida Firm No F-01000005061
Certificate of Authorization: #9090
L David Rice
Registration No: 50923

L. DAVID RICE LICENSE No. 50923 STATE OF FLORIDA PROFESSIONAL ENGINEER

AUG 07 2015

Notes:
1. Tested in accordance to Florida Building Code test protocol TAS-201, TAS-202, TAS203.
2. Tested for areas including high velocity hurricane zones.
3. Tested under Miami-Dade County Notification number ATI 08033.

Material: N/A	Part Number: N/A	Unless Otherwise Specified Dimensions are in Inches.
Blank Size: N/A x N/A	MACOLA Number: N/A	Standard Tolerances are: Fractions: ±1/16 Decimal: .XX±.05 .XXX±.015 Angles: ±1°
Weight: N/A lbs	Drawing Name: CURB	
	Drawn By: N Perry	
	Drawing Number: EXHAUST07	
	Sheet: 7 of 12	

RUPP AIR MANAGEMENT SYSTEMS®

Miami-Dade County - Roof Curb
Installation Guide For Concrete Substrate

Rupp Air Management Systems
101 North Industrial Parkway West
Union, IA 52175
P 800.334.9256 / 919.227.5994

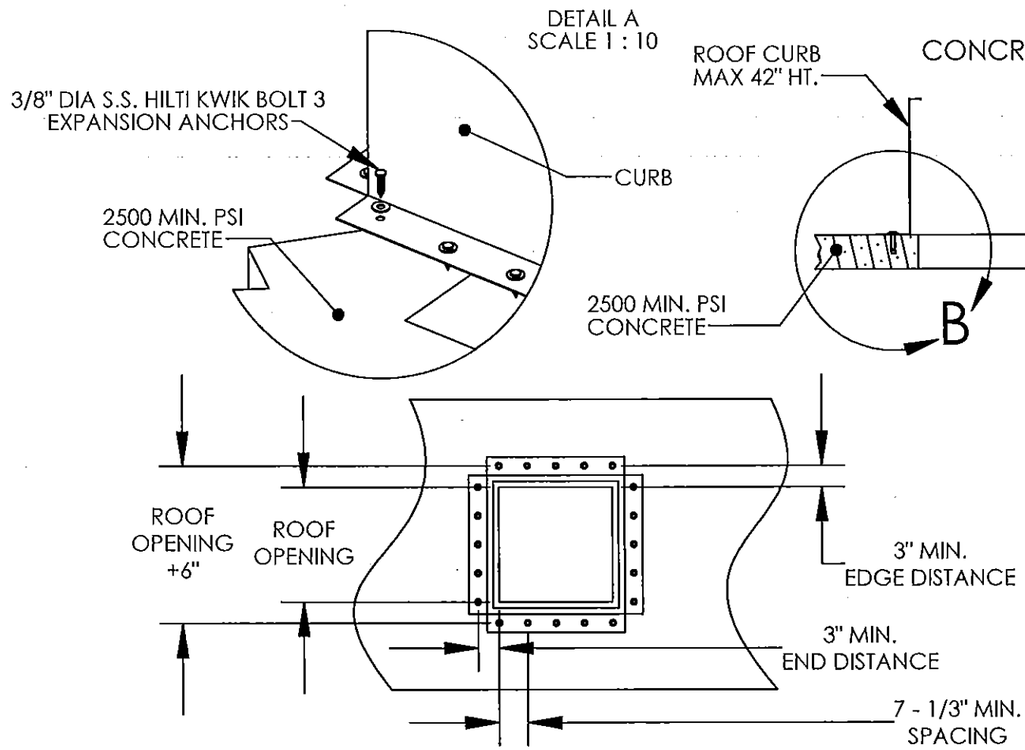

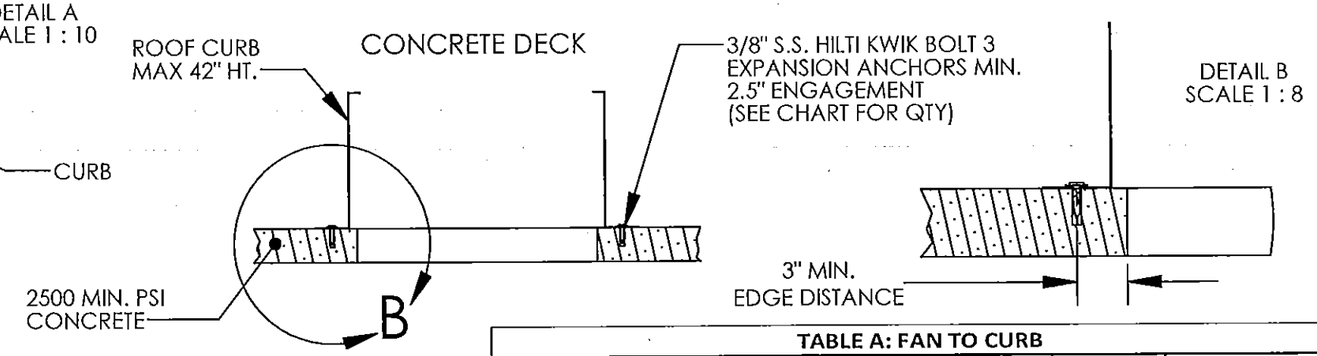

TABLE A: FAN TO CURB

Unit Size - Model RA	Base Size	Curb Size	Fasteners	
			Per Side	Total
DU10, DU12 / DR10, DR12 / DDAR10, DDAR12	19"	17 - 1/2"	3	12
DU25, DU30, DU33, DU50, NCA08, NCA10 / DR25, DR30, DR33, DR50, DD7, DD8, DD9, DD11, DD13 / DDAR14, DMUA14	21"	19 - 1/2"	3	12
DU75, DU85, NCA14 / DR75, DR85, DD15	24 - 3/4"	23"	3	12
DDAR18, DMUA18	26"	24 - 1/2"	3	12
DU180, DU200, NCA16, NCA18 / DR180, DR200, DD18, DD20	28"	26 - 1/2"	3	12
DU240, NCA24 / DR240, DD24	33"	31 - 1/2"	3	12
DU300, NCA30 / DR300, DD30	40"	38 - 1/2"	3	12
DU360, NCA36 / DR360, DD36	44"	42 - 1/2"	4	16

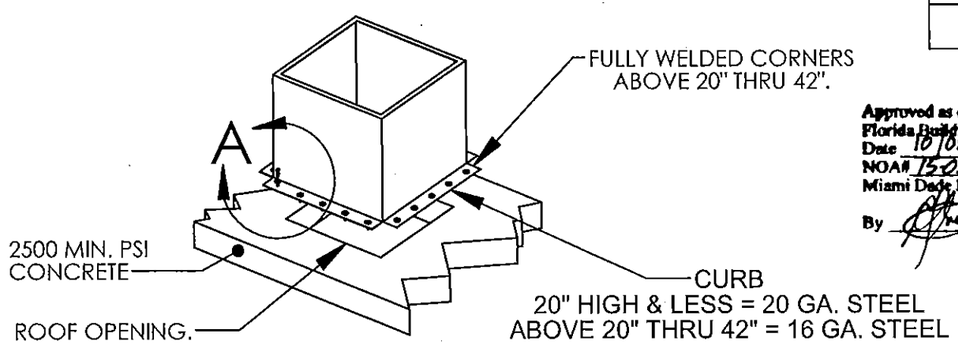

Approved as complying with the Florida Building Code
Date 10/08/2015
NOA# 15-0526.08
Miami Dade Product Control
By

TABLE B: CURB TO DECK

Unit Size - Model RA	Concrete	
	Per Side	Total
DU10, DU12 / DR10, DR12 / DDAR10, DDAR12	3	12
DU25, DU30, DU33, DU50, NCA08, NCA10 / DR25, DR30, DR33, DR50, DD7, DD8, DD9, DD11, DD13 / DDAR14, DMUA14	3	12
DU75, DU85, NCA14 / DR75, DR85, DD15	3	12
DDAR18, DMUA18	4	16
DU180, DU200, NCA16, NCA18 / DR180, DR200, DD18, DD20	4	16
DU240, NCA24 / DR240, DD24	4	16
DU300, NCA30 / DR300, DD30	6	24
DU360, NCA36 / DR360, DD36	7	28

RICE ENGINEERING
105 School Creek Trail
Luxemburg WI 54217
Phone 920.845 1042
Fax 920.845 1048
www.rice-inc.com
Florida Firm No F-01000005061
Certificate of Authorization: #9090
L David Rice
Registration No: 50923

L. DAVID RICE LICENSE No. 50923 STATE OF FLORIDA PROFESSIONAL ENGINEER

AUG 07 2015

Notes:
1. Tested in accordance to Florida Building Code test protocol TAS-201, TAS-202, TAS203.
2. Tested for areas including high velocity hurricane zones.
3. Tested under Miami-Dade County Notification number ATI 08033.

Material: N/A	Part Number: N/A	Unless Otherwise Specified Dimensions are in Inches.
Blank Size: N/A x N/A	MACOLA Number: N/A	Standard Tolerances are: Fractions: ±1/16 Decimal: .XX±.05 .XXX±.015 Angles: ±1°
Weight: N/A lbs	Drawing Name: CURB	
	Drawn By: N Perry	
	Drawing Number: EXHAUST08	
	Sheet: 8 of 12	

RUPP AIR MANAGEMENT SYSTEMS®

Miami-Dade County - Roof Curb
Installation Guide For Steel Substrate

Rupp Air Management Systems
101 North Industrial Parkway West
Union, IA 52175
P 800.334.9256 / 919.227.5994

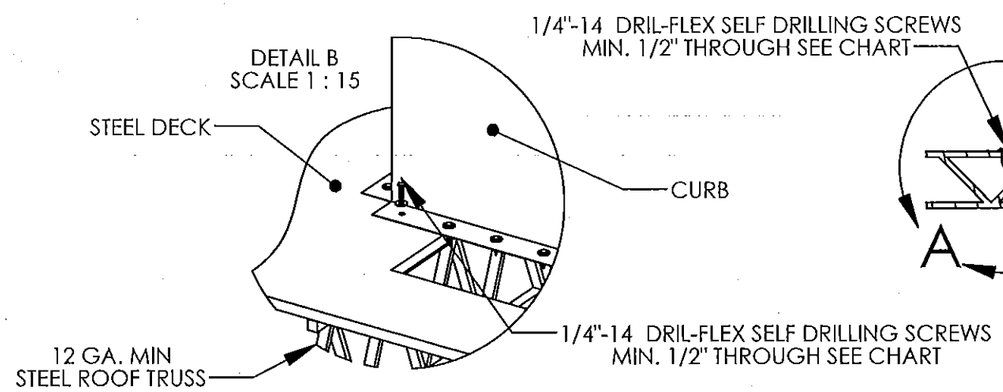

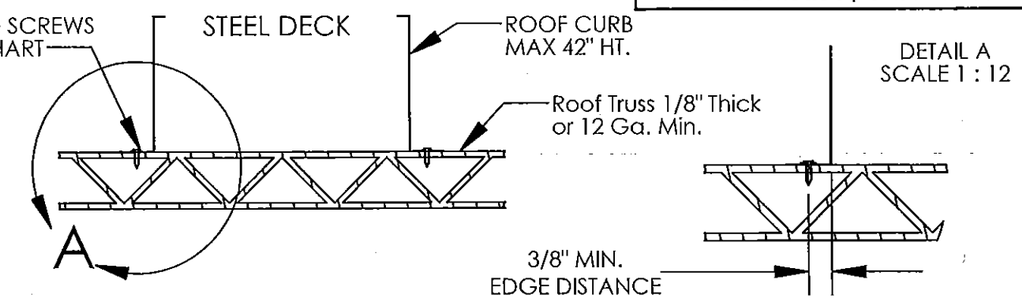

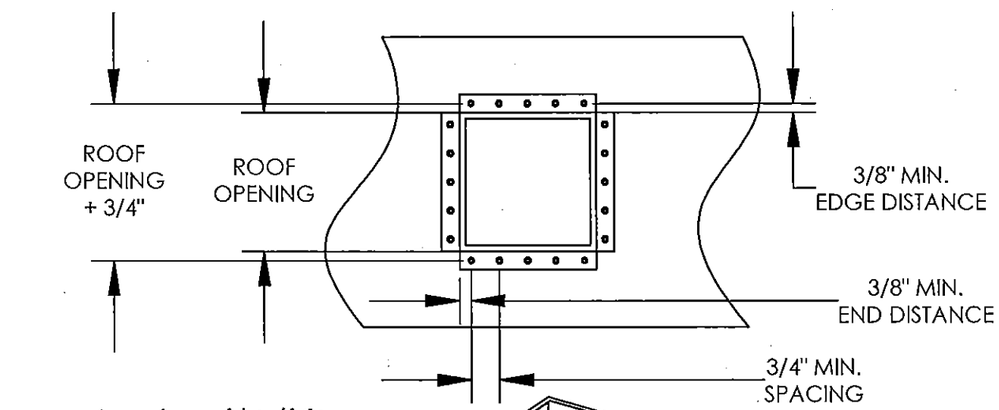

TABLE A: FAN TO CURB				
Unit Size - Model RA	Base Size	Curb Size	Fasteners	
			Per Side	Total
DU10, DU12 / DR10, DR12 / DDAR10, DDAR12	19"	17 - 1/2"	3	12
DU25, DU30, DU33, DU50, NCA08, NCA10 / DR25, DR30, DR33, DR50, DD7, DD8, DD9, DD11, DD13 / DDAR14, DMUA14	21"	19 - 1/2"	3	12
DU75, DU85, NCA14 / DR75, DR85, DD15	24 - 3/4"	23"	3	12
DDAR18, DMUA18	26"	24 - 1/2"	3	12
DU180, DU200, NCA16, NCA18 / DR180, DR200, DD18, DD20	28"	26 - 1/2"	3	12
DU240, NCA24 / DR240, DD24	33"	31 - 1/2"	3	12
DU300, NCA30 / DR300, DD30	40"	38 - 1/2"	3	12
DU360, NCA36 / DR360, DD36	44"	42 - 1/2"	4	16

Approved as complying with the
Florida Building Code
Date 10/08/2015
NOA# 15-0526.08
Miami Dade Product Control
By

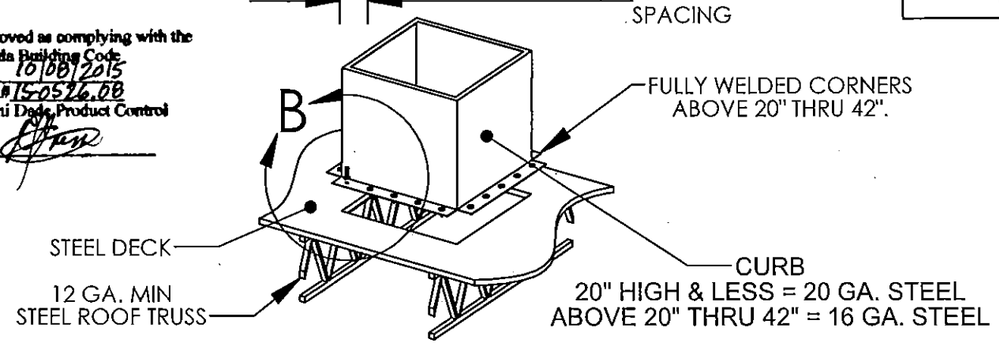

TABLE B: CURB TO DECK		
Unit Size - Model RA	Steel	
	Per Side	Total
DU10, DU12 / DR10, DR12 / DDAR10, DDAR12	3	12
DU25, DU30, DU33, DU50, NCA08, NCA10 / DR25, DR30, DR33, DR50, DD7, DD8, DD9, DD11, DD13 / DDAR14, DMUA14	4	16
DU75, DU85, NCA14 / DR75, DR85, DD15	5	20
DDAR18, DMUA18	6	24
DU180, DU200, NCA16, NCA18 / DR180, DR200, DD18, DD20	6	24
DU240, NCA24 / DR240, DD24	7	28
DU300, NCA30 / DR300, DD30	9	36
DU360, NCA36 / DR360, DD36	11	44

Notes:
1. Tested in accordance to Florida Building Code test protocol TAS-201, TAS-202, TAS203.
2. Tested for areas including high velocity hurricane zones.
3. Tested under Miami-Dade County Notification number ATI 08033.

RICE ENGINEERING
105 School Creek Trail
Luxemburg WI 54217
Phone 920.845 1042
Fax 920.845 1048
www.rice-inc.com
Florida Firm No: F-01000005061
Certificate of Authorization: #9090
L. David Rice
Registration No: 50923

L. DAVID RICE
LICENSE
No. 50923
STATE OF FLORIDA
PROFESSIONAL ENGINEER

AUG 07 2015

Material: N/A	Part Number: N/A	Unless Otherwise Specified Dimensions are in Inches.
Blank Size: N/A x N/A	MACOLA Number: N/A	Standard Tolerances are: Fractions: ±1/16 Decimal: .XX±.05 .XXX±.015 Angles: ±1°
Weight: N/A lbs	Drawing Name: CURB	
	Drawn By: N Perry	
	Drawing Number: EXHAUST09	
	Sheet: 9 of 12	

RUPP AIR MANAGEMENT SYSTEMS®

Miami-Dade County - Wall Curb
Installation Guide For Wood Construction

Rupp Air Management Systems
101 North Industrial Parkway West
Union, IA 52175
P 800.334.9256 / 919.227.5994

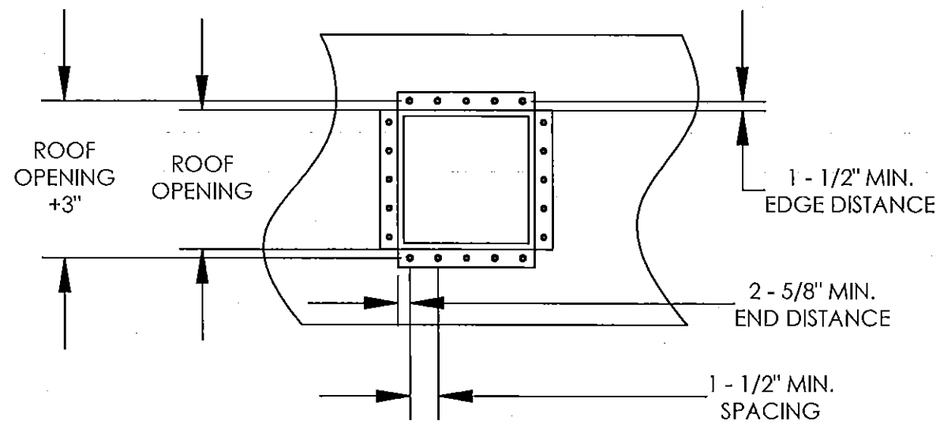

WOODEN CONSTRUCTION

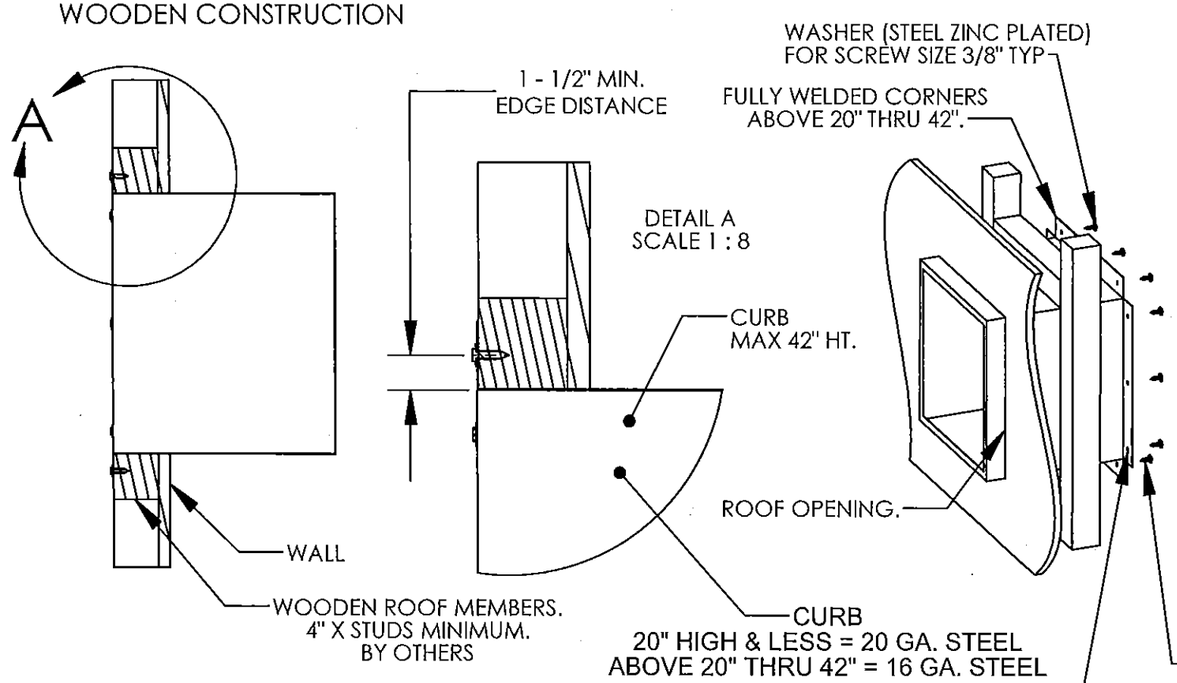

TABLE A: FAN TO CURB

Unit Size - Model RA	Base Size	Curb Size	Fasteners	
			Per Side	Total
DU10, DU12 / DR10, DR12 / DDAR10, DDAR12	19"	17 - 1/2"	3	12
DU25, DU30, DU33, DU50, NCA08, NCA10 / DR25, DR30, DR33, DR50, DD7, DD8, DD9, DD11, DD13 / DDAR14, DMUA14	21"	19 - 1/2"	3	12
DU75, DU85, NCA14 / DR75, DR85, DD15	24 - 3/4"	23"	3	12
DDAR18, DMUA18	26"	24 - 1/2"	3	12
DU180, DU200, NCA16, NCA18 / DR180, DR200, DD18, DD20	28"	26 - 1/2"	3	12
DU240, NCA24 / DR240, DD24	33"	31 - 1/2"	3	12
DU300, NCA30 / DR300, DD30	DO NOT WALL MOUNT			
DU360, NCA36 / DR360, DD36				

TABLE B: CURB TO WALL

Unit Size - Model RA	Wood	
	Per Side	Total
DU10, DU12 / DR10, DR12 / DDAR10, DDAR12	3	12
DU25, DU30, DU33, DU50, NCA08, NCA10 / DR25, DR30, DR33, DR50, DD7, DD8, DD9, DD11, DD13 / DDAR14, DMUA14	3	12
DU75, DU85, NCA14 / DR75, DR85, DD15	4	16
DDAR18, DMUA18	5	20
DU180, DU200, NCA16, NCA18 / DR180, DR200, DD18, DD20	5	20
DU240, NCA24 / DR240, DD24	6	24
DU300, NCA30 / DR300, DD30	DO NOT WALL MOUNT	
DU360, NCA36 / DR360, DD36		

RICE ENGINEERING
105 School Creek Trail
Luxemburg, WI 54217
Phone 920.845.1042
Fax 920.845.1048
www.rice-inc.com

Florida Firm No F-01000005061
Certificate of Authorization: #9090
L David Rice
Registration No: 50923

L. DAVID RICE LICENSE No. 50923 STATE OF FLORIDA PROFESSIONAL ENGINEER

Approved as complying with the Florida Building Code
Date 10/08/2015
NOA# 15-0526.08
Miami Dade Product Control
By

AUG 07 2015

Notes:
1. Tested in accordance to Florida Building Code test protocol TAS-201, TAS-202, TAS203.
2. Tested for areas including high velocity hurricane zones.
3. Tested under Miami-Dade County Notification number ATI 18033.

Material: N/A	Part Number: N/A	Unless Otherwise Specified Dimensions are in Inches.
Blank Size: N/A x N/A	MACOLA Number: N/A	Standard Tolerances are: Fractions: ±1/16 Decimal: .XX±.05 .XXX±.015 Angles: ±1°
Weight: N/A lbs	Drawing Name: CURB	
	Drawn By: N Perry	
	Drawing Number: EXHAUST10	
	Sheet: 10 of 12	

RUPP AIR MANAGEMENT SYSTEMS®

Miami-Dade County - Wall Curb
Installation Guide For Concrete Construction

Rupp Air Management Systems
101 North Industrial Parkway West
Union, IA 52175
P 800.334.9256 / 919.227.5994

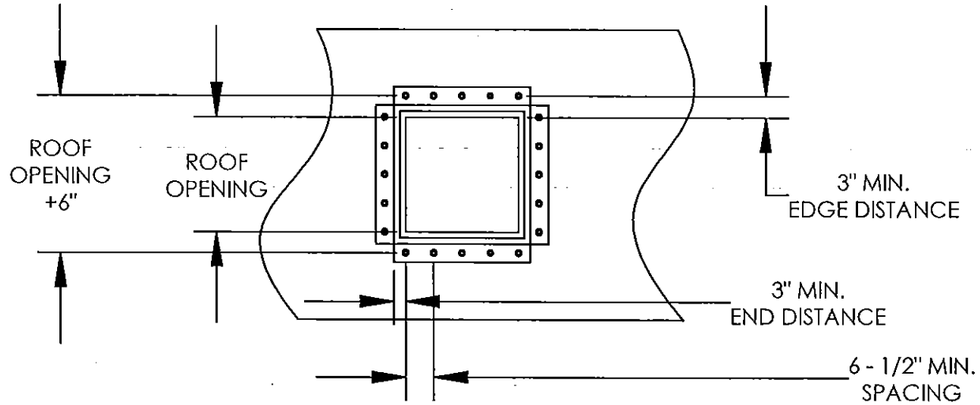

CONCRETE CONSTRUCTION

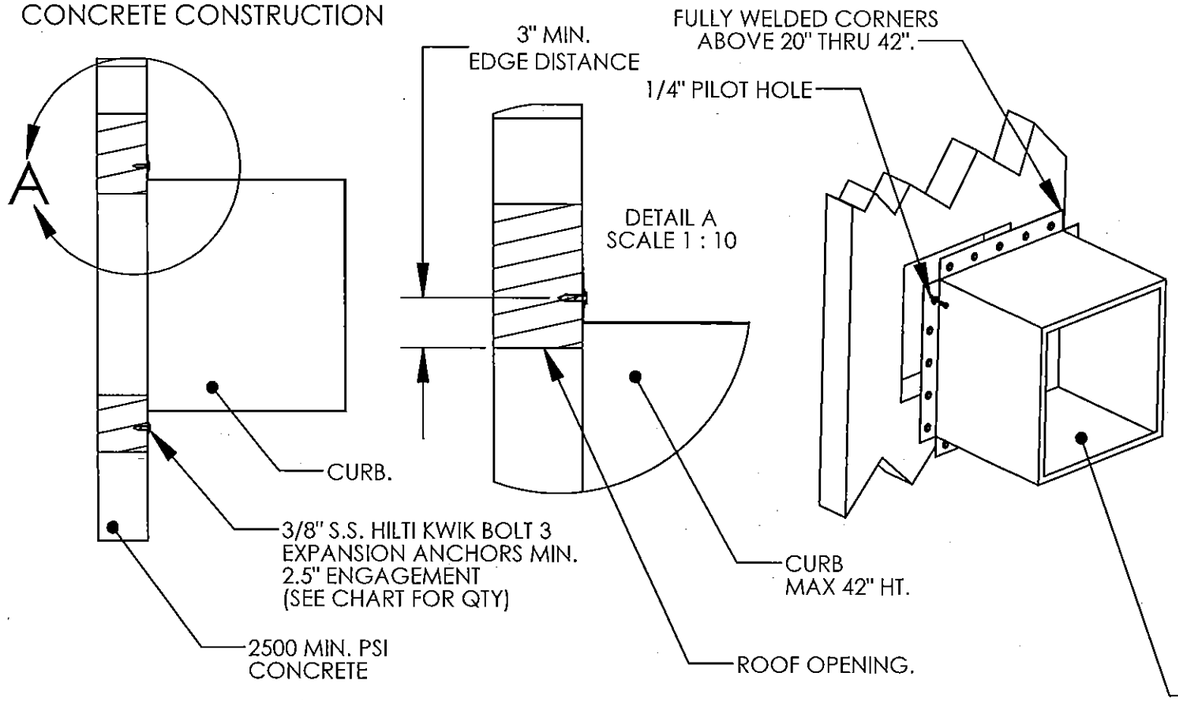

TABLE A: FAN TO CURB

Unit Size - Model RA	Base Size	Curb Size	Fasteners	
			Per Side	Total
DU10, DU12 / DR10, DR12 / DDAR10, DDAR12	19"	17 - 1/2"	3	12
DU25, DU30, DU33, DU50, NCA08, NCA10 / DR25, DR30, DR33, DR50, DD7, DD8, DD9, DD11, DD13 / DDAR14, DMUA14	21"	19 - 1/2"	3	12
DU75, DU85, NCA14 / DR75, DR85, DD15	24 - 3/4"	23"	3	12
DDAR18, DMUA18	26"	24 - 1/2"	3	12
DU180, DU200, NCA16, NCA18 / DR180, DR200, DD18, DD20	28"	26 - 1/2"	3	12
DU240, NCA24 / DR240, DD24	33"	31 - 1/2"	3	12
DU300, NCA30 / DR300, DD30	DO NOT WALL MOUNT			
DU360, NCA36 / DR360, DD36				

TABLE B: CURB TO WALL

Unit Size - Model RA	Concrete	
	Per Side	Total
DU10, DU12 / DR10, DR12 / DDAR10, DDAR12	3	12
DU25, DU30, DU33, DU50, NCA08, NCA10 / DR25, DR30, DR33, DR50, DD7, DD8, DD9, DD11, DD13 / DDAR14, DMUA14	3	12
DU75, DU85, NCA14 / DR75, DR85, DD15	3	12
DDAR18, DMUA18	4	16
DU180, DU200, NCA16, NCA18 / DR180, DR200, DD18, DD20	4	16
DU240, NCA24 / DR240, DD24	5	20
DU300, NCA30 / DR300, DD30	DO NOT WALL MOUNT	
DU360, NCA36 / DR360, DD36		

RICE ENGINEERING
105 School Creek Trail
Luxemburg, WI 54217
Phone 920.845.1042
Fax 920.845.1048
www.rice-inc.com
Florida Firm No. F-01000005061
Certificate of Authorization. #9090
L. David Rice
Registration No. 50923

L. DAVID RICE LICENSE No. 50923 STATE OF FLORIDA PROFESSIONAL ENGINEER

Approved as complying with the Florida Building Code
Date 10/08/2015
NOA# 15-0526.08
Miami Dade Product Control
By

AUG 07 2015

Notes:
1. Tested in accordance to Florida Building Code test protocol TAS-201, TAS-202, TAS203.
2. Tested for areas including high velocity hurricane zones.
3. Tested under Miami-Dade County Notification number ATI 18033.

Material: N/A	Part Number: N/A	Unless Otherwise Specified Dimensions are in Inches.
Blank Size: N/A x N/A	MACOLA Number: N/A	Standard Tolerances are: Fractions: ±1/16 Decimal: .XX±.05 .XXX±.015 Angles: ±1°
Weight: N/A lbs	Drawing Name: CURB	
	Drawn By: N Perry	
	Drawing Number: EXHAUST11	
	Sheet: 11 of 12	

RUPP AIR MANAGEMENT SYSTEMS®

Miami-Dade County - Wall Curb
Installation Guide For Steel Construction

Rupp Air Management Systems
101 North Industrial Parkway West
Union, IA 52175
P 800.334.9256 / 919.227.5994

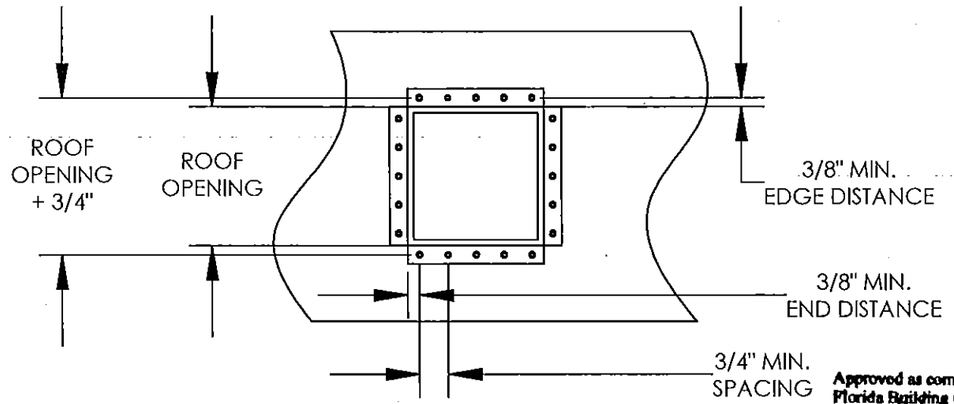

STEEL CONSTRUCTION

Approved as complying with the Florida Building Code
Date 10/08/2015
NOA# 15-0526.08
Miami Dade Product Control
By

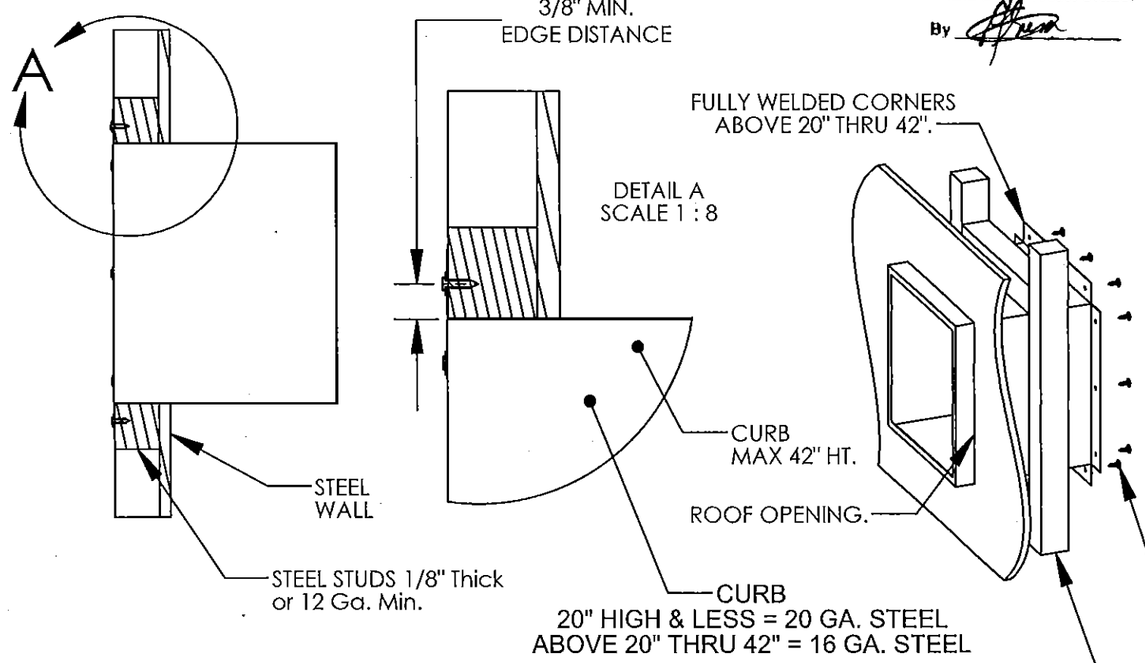

TABLE A: FAN TO CURB

Unit Size - Model RA	Base Size	Curb Size	Fasteners	
			Per Side	Total
DU10, DU12 / DR10, DR12 / DDAR10, DDAR12	19"	17 - 1/2"	3	12
DU25, DU30, DU33, DU50, NCA08, NCA10 / DR25, DR30, DR33, DR50, DD7, DD8, DD9, DD11, DD13 / DDAR14, DMUA14	21"	19 - 1/2"	3	12
DU75, DU85, NCA14 / DR75, DR85, DD15	24 - 3/4"	23"	3	12
DDAR18, DMUA18	26"	24 - 1/2"	3	12
DU180, DU200, NCA16, NCA18 / DR180, DR200, DD18, DD20	28"	26 - 1/2"	3	12
DU240, NCA24 / DR240, DD24	33"	31 - 1/2"	3	12
DU300, NCA30 / DR300, DD30	DO NOT WALL MOUNT			
DU360, NCA36 / DR360, DD36				

TABLE B: CURB TO WALL

Unit Size - Model RA	Steel	
	Per Side	Total
DU10, DU12 / DR10, DR12 / DDAR10, DDAR12	3	12
DU25, DU30, DU33, DU50, NCA08, NCA10 / DR25, DR30, DR33, DR50, DD7, DD8, DD9, DD11, DD13 / DDAR14, DMUA14	4	16
DU75, DU85, NCA14 / DR75, DR85, DD15	5	20
DDAR18, DMUA18	6	24
DU180, DU200, NCA16, NCA18 / DR180, DR200, DD18, DD20	6	24
DU240, NCA24 / DR240, DD24	8	32
DU300, NCA30 / DR300, DD30	DO NOT WALL MOUNT	
DU360, NCA36 / DR360, DD36		

RICE ENGINEERING
105 School Creek Trail
Luxemburg, WI 54217
Phone 920.845 1042
Fax 920.845 1048
www.rice-inc.com

Florida Firm No F-01000005061
Certificate of Authorization #9090
L David Rice
Registration No 50923

L. DAVID RICE LICENSE No. 50923 STATE OF FLORIDA PROFESSIONAL ENGINEER

AUG 07 2015

Notes:
1. Tested in accordance to Florida Building Code test protocol TAS-201, TAS-202, TAS203.
2. Tested for areas including high velocity hurricane zones.
3. Tested under Miami-Dade County Notification number ATI 18033.

Material: N/A	Part Number: N/A	Unless Otherwise Specified Dimensions are in Inches.
Blank Size: N/A x N/A	MACOLA Number: N/A	Standard Tolerances are: Fractions: ±1/16 Decimal: .XX±.05 .XXX±.015 Angles: ±1°
Weight: N/A lbs	Drawing Name: CURB	
	Drawn By: N Perry	
	Drawing Number: EXHAUST12	
	Sheet: 12 of 12	

RUPP AIR MANAGEMENT SYSTEMS®