MIAMI-DADE COUNTY
DEPARTMENT OF REGULATORY AND ECONOMIC RESOURCES (RER)
BOARD AND CODE ADMINISTRATION DIVISION

MIAMI-DADE COUNTY
PRODUCT CONTROL SECTION
11805 SW 26 Street, Room 208
T (786) 315-2590 F (786) 315-2599
www.miamidade.gov/economy

NOTICE OF ACCEPTANCE (NOA)

US Aluminum – Division of C.R. Laurence Co., Inc.
2503 E. Vernon Ave.
Los Angeles, CA 90058

SCOPE:

This NOA is being issued under the applicable rules and regulations governing the use of construction materials. The documentation submitted has been reviewed and accepted by Miami-Dade County RER-Product Control Section to be used in Miami-Dade County and other areas where allowed by the Authority Having Jurisdiction (AHJ).

This NOA shall not be valid after the expiration date stated below. The Miami-Dade County Product Control Section (In Miami-Dade County) and/ or the AHJ (in areas other than Miami-Dade County) reserve the right to have this product or material tested for quality assurance purposes. If this product or material fails to perform in the accepted manner, the manufacturer will incur the expense of such testing and the AHJ may immediately revoke, modify, or suspend the use of such product or material within their jurisdiction. RER reserves the right to revoke this acceptance, if it is determined by Miami-Dade County Product Control Section that this product or material fails to meet the requirements of the applicable building code.

This product is approved as described herein, and has been designed to comply with the Florida Building Code, including the High Velocity Hurricane Zone.

DESCRIPTION: Series "BT-601/IT-600 Storm Front" Aluminum Storefront System - L.M.I.

APPROVAL DOCUMENT: Drawing No. **08-00919**, titled "Series BT601/IT600 Storm Front Aluminum Storefront - LMI" Sheets 1 through 9 of 9, dated 01/13/10, with revision C dated 05/08/15, prepared by manufacturer, signed and sealed by Luis R. Lomas, P.E., bearing the Miami-Dade County Product Control Revision stamp with the Notice of Acceptance number and expiration date by the Miami-Dade County Product Control Section.

MISSILE IMPACT RATING: Large Missile Impact Resistant

LABELING: Each unit shall bear a permanent label with the manufacturer's name or logo, Waxahachie, TX, model/series, and following statement: "Miami-Dade County Product Control Approved", unless otherwise noted herein.

RENEWAL of this NOA shall be considered after a renewal application has been filed and there has been no change in the applicable building code negatively affecting the performance of this product.

TERMINATION of this NOA will occur after the expiration date or if there has been a revision or change in the materials, use, and/ or manufacture of the product or process. Misuse of this NOA as an endorsement of any product, for sales, advertising or any other purposes shall automatically terminate this NOA. Failure to comply with any section of this NOA shall be cause for termination and removal of NOA.

ADVERTISEMENT: The NOA number preceded by the words Miami-Dade County, Florida, and followed by the expiration date may be displayed in advertising literature. If any portion of the NOA is displayed, then it shall be done in its entirety.

INSPECTION: A copy of this entire NOA shall be provided to the user by the manufacturer or its distributors and shall be available for inspection at the job site at the request of the Building Official.

This NOA **revises and renews NOA No. 11-0310.04** and consists of this page 1, Evidence pages E-1 and E-2, and Green Sustainable Attributes pages G-1 thru G-5, as well as approval document mentioned above.

The submitted documentation was reviewed by **Manuel Perez, P.E.**

MIAMI-DADE COUNTY APPROVED

10/09/15

NOA No. 15-0526.11
Expiration Date: July 07, 2020
Approval Date: October 08, 2015
Page 1

US Aluminum – Division of C.R. Laurence Co., Inc.

NOTICE OF ACCEPTANCE: EVIDENCE SUBMITTED

A. DRAWINGS

1. Manufacturer's die drawings and sections.
   (Submitted under NOA No. 10-0422.08)
2. Drawing No. **08-00919**, titled "Series BT601/IT600 Storm Front Aluminum Storefront - LMI", sheets 1 through 9 of 9, dated 01/13/10, with revision C dated 05/08/15, prepared by manufacturer, signed and sealed by Luis R. Lomas, P.E.

B. TESTS

1. Test reports on: 1) Air Infiltration Test, per TAS 202-94
   2) Uniform Static Air Pressure Test, Loading per TAS 202-94
   3) Water Resistance Test, per TAS 202-94
   4) Large Missile Impact Test, TAS PA 201-94
   5) Cyclic Loading Test, per FBC TAS 203-94
   6) Forced Entry Test, per FBC 2411 3.2.1, TAS 202-94
   7) Tensile Test, per ASTM E8

   along with installation diagram of aluminum storefront system and aluminum storefront door system, marked-up by American Test Lab, Inc. North, Test Report No. **ATLNC-1019.01-09,** dated 02/22/09, signed and sealed by David Wesley Johnson, P.E.
   (Submitted under NOA #10-0422.08)

C. CALCULATIONS

1. Anchor verification calculations and structural analysis, complying with **FBC 5th Edition (2014)**, dated 05/08/15, prepared, signed and sealed by Luis R. Lomas, P.E.
2. Glazing complies with **ASTM E1300-04**

D. QUALITY ASSURANCE

1. Miami-Dade Department of Regulatory and Economic Resources (RER).

E. MATERIAL CERTIFICATIONS

1. Notice of Acceptance No. **14-0916.11** issued to **Kuraray America, Inc.** for their **"SentryGlas® (Clear and White) Glass Interlayers"** dated 06/25/15, expiring on 07/04/18.

F. STATEMENTS

1. Statement letter of conformance, complying with **FBC 5th Edition (2014)**, and of no financial interest, dated May 08, 2015, issued, signed and sealed by Luis R. Lomas, P.E.
2. Proposal # **09-1190** issued by BCCO to United States Aluminum Corporation, dated 08/24/09, signed by Jaime Gascon, P.E., Chief Product Control Division.
   (Submitted under NOA No. 10-0422.08)

Manuel Perez

Manuel Perez, P.E.
Product Control Examiner
NOA No. 15-0526.11
Expiration Date: July 07, 2020
Approval Date: October 08, 2015

G. OTHERS

1. Notice of Acceptance No. **11-0310.04**, issued to United States Aluminum Corporation for their Series "BT-601/IT-600 Storm Front" Aluminum Storefront System – L.M.I., approved on 05/05/11 and expiring on 07/07/15.
2. NFRC U-Factor, SHGC, VT, & Condensation Resistance Computer Simulation Reports on:
   1) **NFRC 100-2004** "Procedure for Determining Fenestration Product U-Factors"
   2) **NFRC 200-2004** "Procedure for Determining Fenestration Product Solar Heat Gain Coefficient and Visible Transmittance at Normal Incidence"
   3) **NFRC 500-2004** "Procedure for Determining Fenestration Product Condensation Resistance Values"

   Using computer simulation in accordance with NFRC: Frame and Edge Modeling: THERM 5.2.14, Center-to-Glass Modeling: WINDOW 5.2.17 and Total Product Calculations: WINDOW 5.2.17, of a series BT601 aluminum glazed window wall system with thermal breaks at all members, along with attached drawings and bill of materials included in Appendix A, marked-up by Architectural Testing, Inc. Test Report No. **ATI-87798.02-116-45,** pages 1 through 21 op` 21, dated 09/16/09 and revised on 10/06/09, signed by Kristen L. Livelsberger.
3. NFRC 102-2004 Thermal Performance Test Report on:
   1) **NFRC 102-2004** "Test Procedure for Measuring the Steady State Thermal Transmittance of Fenestration Systems"

   of a series BT601 storefront, aluminum glazed wall system with thermal breaks at all members, along with attached Description Table Abbreviations in Appendix A and submittal Form and Drawings included in Appendix B, marked-up by Architectural Testing, Inc. Test Report No. **ATI-94322.01-116-46,** pages 1 through 8 of 8, dated 11/12/09, signed by Ryan P. Moser and Shon W. Einsig.
4. AAMA 1503-09 Thermal Performance Test Report on:
   1) **AAMA 1503-09** "Voluntary Test Method for Thermal Transmittance and Condensation Resistance of Windows, Doors and Glazed Wall Sections"

   of a series BT601 storefront, aluminum glazed wall system with thermal breaks at all members, along with attached Description Table Abbreviations in Appendix A and submittal Form and Drawings included in Appendix B, marked-up by Architectural Testing, Inc. Test Report No. **ATI-94322.02-116-46,** pages 1 through 8 of 8, dated 11/12/09, signed by Ryan P. Moser and Shon W. Einsig.

Manuel Perez, P.E.
Product Control Examiner
NOA No. 15-0526.11
Expiration Date: July 07, 2020
Approval Date: October 08, 2015

NOTICE OF ACCEPTANCE: EVIDENCE SUBMITTED

GREEN SUSTAINABLE ATTRIBUTES (GSA)

SCOPE: This document is solely for the purpose of verification of Sustainable Attributes of construction materials. The documentation submitted has been reviewed by Miami-Dade County Product Control Section.

G.8 – U-FACTOR (THERMAL TRANSMITTANCE) BTU/HR-FT^2-^{0}F					
G.9 – SHGC-FACTOR (SOLAR HEAT GAIN COEFFICIENT) BTU/HR-FT^2					
ID#	Test Report#:	Product Description	Glazing Components:	G.8: U-Factor	G.9: SHGC
1	ATI 87798.02-116-45	BT601	1/4clr/A1-D air /1/4clr.030 pvb 1/4clr	0.56	0.58
2			1/4clr/ A1-D arg /1/4clr.030 pvb 1/4clr	0.54	0.58
3			1/4SB60/ A1-D air/1/4clr.030 pvb 1/4clr	0.42	0.33
4			1/4SB60/ A1-D arg/1/4clr.030 pvb 1/4clr	0.38	0.33
5			1/4-SB60 ATL/ A1-D air/1/4clr.030 pvb 1/4clr	0.42	0.24
6			1/4-SB70/ A1-D air/1/4clr.030 pvb 1/4clr	0.41	0.24
7			1/4-SB70/ A1-D arg/1/4clr.030 pvb 1/4clr	0.38	0.24
8			1/4-VE185/ A1-D air/1/4clr.030 pvb 1/4clr	0.43	0.47
9			1/4-VE185/ A1-D arg/1/4clr.030 pvb 1/4clr	0.40	0.47
10			1/4-VE12M/ A1-D air/1/4clr.030 pvb 1/4clr	0.42	0.33
11			1/4-VE12M/ A1-D arg/1/4clr.030 pvb 1/4clr	0.39	0.33
12			1/4-TiAC36/ A1-D air/1/4clr.030 pvb 1/4clr	0.42	0.31
13			1/4-TiAC36/ A1-D arg/1/4clr.030 pvb 1/4clr	0.38	0.31
14			1/4-TiAC23/ A1-D air/1/4clr.030 pvb 1/4clr	0.42	0.21
15			1/4-TiAC23/ A1-D arg/1/4clr.030 pvb 1/4clr	0.39	0.20
16			1/4-ADV/ A1-D air/1/4clr.030 pvb 1/4clr	0.45	0.53
17			1/4-ADV/ A1-D arg/1/4clr.030 pvb 1/4clr	0.42	0.53
18			1/4-SG100/ A1-D air/1/4clr.030 pvb 1/4clr	0.43	0.47
19			1/4-SB80/ A1-D air/1/4clr.030 pvb 1/4clr	0.42	0.21
20			1/4-SB80/ A1-D arg/1/4clr.030 pvb 1/4clr	0.38	0.21
21			1/4clr/ A1-D air/1/4clr.090 SGP 1/4clr	0.55	0.58
22			1/4-clr/ A1-D arg/1/4clr.090SGP 1/4clr	0.53	0.58
23			1/4-SB60/ A1-D air/1/4clr.090SGP 1/4clr	0.41	0.33
24			1/4-SB60/ A1-D arg/1/4clr.090SGP 1/4clr	0.38	0.33
25			1/4-SB60ATL/ A1-D air/1/4clr.090SGP 1/4clr	0.41	0.24
26			1/4-SB70/ A1-D air/1/4clr.090SGP 1/4clr	0.41	0.24
27			1/4-SB70 A1-D /arg/1/4clr.090SGP 1/4clr	0.37	0.24
28			1/4-VE185/ A1-D air/1/4clr.090SGP 1/4clr	0.43	0.47
29			1/4-VE185/ A1-D arg/1/4clr.090SGP 1/4clr	0.40	0.47
30			1/4-VE12M/ A1-D air/1/4clr.090SGP 1/4clr	0.42	0.33
31			1/4-VE12M/ A1-D arg/1/4clr.090SGP 1/4clr	0.38	0.33
32			1/4-TiAC36 A1-D /air/1/4clr.090SGP 1/4clr	0.41	0.31
33			1/4TiAC36/ A1-D arg/1/4clr.090SGP 1/4clr	0.38	0.31
34			1/4-TiAC23/ A1-D air/1/4clr.090SGP 1/4clr	0.42	0.21
35			1/4-TiAC23/ A1-D arg/1/4clr.090SGP 1/4clr	0.38	0.20

Manuel Perez

Manuel Perez, P.E.
Product Control Examiner
NOA No. 15-0526.11
Expiration Date: July 07, 2020
Approval Date: October 08, 2015

GREEN SUSTAINABLE ATTRIBUTES (GSA) (CONTINUED)

ID#	Test Report#:	Product Description	Glazing Components:	G.8: U-factor	G.9: SHGC
36	ATI 87798.02-116-45	BT601	1/4-ADV/ A1-D air/1/4clr.090SGP 1/4clr	0.44	0.53
37			1/4-ADV A1-D /arg/1/4clr.090SGP 1/4clr	0.41	0.53
38			1/4-SG100/ A1-D air/1/4clr.090SGP 1/4clr	0.43	0.47
39			1/4-SB80/ A1-D air/1/4clr.090SGP 1/4clr	0.41	0.21
40			1/4SB80/ A1-D arg/1/4clr.090SGP 1/4clr	0.38	0.21
41			1/4-clr/ CU-D air/1/4clr.030 pvb 1/4clr	0.55	0.58
42			1/4-clr/ CU-D arg/1/4clr.030 pvb 1/4clr	0.53	0.58
43			1/4-SB60/ CU-D air/1/4clr.030 pvb 1/4clr	0.41	0.33
44			1/4-SB60/ CU-D arg/1/4clr.030 pvb 1/4clr	0.38	0.33
45			1/4-SB60ATL/ CU-D air/1/4clr.030 pvb 1/4clr	0.41	0.24
46			1/4-SB70/ CU-D air/1/4clr.030 pvb 1/4clr	0.41	0.24
47			1/4-SB70/ CU-D arg/1/4clr.030 pvb 1/4clr	0.37	0.24
48			1/4-VE185/ CU-D air/1/4clr.030 pvb 1/4clr	0.43	0.47
49			1/4-VE185/ CU-D arg/1/4clr.030 pvb 1/4clr	0.39	0.47
50			1/4-VE12M/ CU-D air/1/4clr.030 pvb 1/4clr	0.41	0.33
51			1/4-VE12M/ CU-D arg/1/4clr.030 pvb 1/4clr	0.38	0.33
52			1/4-TiAC36/ CU-D air/1/4clr.030 pvb 1/4clr	0.41	0.31
53			1/4-TiAC36 CU-D arg/1/4clr.030 pvb 1/4clr	0.38	0.31
54			1/4-TiAC23/ CU-D air/1/4clr.030 pvb 1/4clr	0.41	0.21
55			1/4-TiAC23/ CU-D arg/1/4clr.030 pvb 1/4clr	0.38	0.20
56			1/4-ADV/ CU-D air/1/4clr.030 pvb 1/4clr	0.44	0.53
57			1/4-ADV/ CU-D arg/1/4clr.030 pvb 1/4clr	0.41	0.53
58			1/4-SG100/ CU-D air/1/4clr.030 pvb 1/4clr	0.43	0.47
59			1/4-SB80/ CU-D air/1/4clr.030 pvb 1/4clr	0.41	0.21
60			1/4-SB80/ CU-D arg/1/4clr.030 pvb 1/4clr	0.37	0.21
61			1/4-clr/ CU-D air/1/4clr.090SGP 1/4clr	0.54	0.58
62			1/4-clr/ CU-D arg/1/4clr.090SGP 1/4clr	0.52	0.58
63			1/4-SB60/ CU-D air/1/4clr.090SGP 1/4clr	0.41	0.33
64			1/4-SB60/ CU-D arg/1/4clr.090SGP 1/4clr	0.37	0.33
65			1/4-SB60ATL/ CU-D air/1/4clr.090SGP 1/4clr	0.41	0.24
66			1/4-SB70/ CU-D air/1/4clr.090SGP 1/4clr	0.40	0.24
67			1/4-SB70/ CU-D arg/1/4clr.090SGP 1/4clr	0.37	0.24
68			1/4-VE185/ CU-D air/1/4clr.090SGP 1/4clr	0.42	0.47
69			1/4-VE185/ CU-D arg/1/4clr.090SGP 1/4clr	0.39	0.47
70			1/4-VE12M/ CU-D air/1/4clr.090SGP 1/4clr	0.41	0.33
71			1/4-VE12M/ CU-D arg/1/4clr.090SGP 1/4clr	0.37	0.33
72			1/4-TiAC36/ CU-D air/1/4clr.090SGP 1/4clr	0.41	0.31
73			1/4-TiAC36 CU-D arg/1/4clr.090SGP 1/4clr	0.37	0.31
74			1/4-TiAC23/ CU-D air/1/4clr.090SGP 1/4clr	0.41	0.21
75			1/4-TiAC23/ CU-D arg/1/4clr.090SGP 1/4clr	0.37	0.20
76			1/4-ADV/ CU-D air/1/4clr.090SGP 1/4clr	0.44	.053
77			1/4-ADV/ CU-D arg/1/4clr.090SGP 1/4clr	0.41	0.53

Manuel Perez

Manuel Perez, P.E.
Product Control Examiner
NOA No. 15-0526.11
Expiration Date: July 07, 2020
Approval Date: October 08, 2015

GREEN SUSTAINABLE ATTRIBUTES (GSA) (CONTINUED)

ID#	Test Report#:	Product Description	Glazing Components:	G.8: U-Factor	G.9: SHGC
78			1/4-SG100/ CU-D air/1/4clr.090SGP 1/4clr	0.42	0.47
79			1/4-SB80/ CU-D air/1/4clr.090SGP 1/4clr	0.40	0.21
80			1/4-SB80/ CU-D arg/1/4clr.090SGP 1/4clr	0.37	0.21
81			1/4-clr/ SS-D air/1/4clr.030 pvb 1/4clr	0.55	0.58
82			1/4-clr/ SS-D arg/1/4clr.030 pvb 1/4clr	0.53	0.58
83			1/4-SB60/ SS-D air/1/4clr.030 pvb 1/4clr	0.41	0.33
84			1/4-SB60/ SS-D arg/1/4clr.030 pvb 1/4clr	0.38	0.33
85			1/4-SB60ATL/ SS-D air/1/4clr.030 pvb 1/4clr	0.41	0.24
86			1/4-SB70/ SS-D air/1/4clr.030 pvb 1/4clr	0.41	0.24
87			1/4-SB70/ SS-D arg/1/4clr.030 pvb 1/4clr	0.37	0.24
88			1/4-VE185/ SS-D air/1/4clr.030 pvb 1/4clr	0.43	0.47
89			1/4-VE185/ SS-D arg/1/4clr.030 pvb 1/4clr	0.40	0.47
90			1/4-VE12M/ SS-D air/1/4clr.030 pvb 1/4clr	0.42	0.33
91			1/4-VE12M/ SS-D arg/1/4clr.030 pvb 1/4clr	0.38	0.33
92			1/4-TiAC36/ SS-D air/1/4clr.030 pvb 1/4clr	0.41	0.31
93			1/4-TiAC36 SS-D arg/1/4clr.030 pvb 1/4clr	0.38	0.31
94			1/4-TiAC23/ SS-D air/1/4clr.030 pvb 1/4clr	0.42	0.21
95			1/4-TiAC23/ SS-D arg/1/4clr.030 pvb 1/4clr	0.38	0.20
96			1/4-ADV/ SS-D air/1/4clr.030 pvb 1/4clr	0.45	0.53
97			1/4-ADV/ SS-D arg/1/4clr.030 pvb 1/4clr	0.41	0.53
98	ATI 87798.02-116-45	BT601	1/4-SG100/ SS-D air/1/4clr.030 pvb 1/4clr	0.43	0.47
99			1/4-SB80/ SS-D air/1/4clr.030 pvb 1/4clr	0.41	0.21
100			1/4-SB80/ SS-D arg/1/4clr.030 pvb 1/4clr	0.38	0.21
101			1/4-clr/ SS-D air/1/4clr.090SGP 1/4clr	0.54	0.58
102			1/4-clr/ SS-D arg/1/4clr.090SGP 1/4clr	0.53	0.58
103			1/4-SB60/ SS-D air/1/4clr.090SGP 1/4clr	0.41	0.33
104			1/4-SB60/ SS-D arg/1/4clr.090SGP 1/4clr	0.38	0.33
105			1/4-SB60ATL/ SS-D air/1/4clr.090SGP 1/4clr	0.41	0.24
106			1/4-SB70/ SS-D air/1/4clr.090SGP 1/4clr	0.41	0.24
107			1/4-SB70/ SS-D arg/1/4clr.090SGP 1/4clr	0.37	0.24
108			1/4-VE185/ SS-D air/1/4clr.090SGP 1/4clr	0.42	0.47
109			1/4-VE185/ SS-D arg/1/4clr.090SGP 1/4clr	0.39	0.47
110			1/4-VE12M/ SS-D air/1/4clr.090SGP 1/4clr	0.41	0.33
111			1/4-VE12M/ SS-D arg/1/4clr.090SGP 1/4clr	0.38	0.33
112			1/4-TiAC36/ SS-D air/1/4clr.090SGP 1/4clr	0.41	0.31
113			1/4-TiAC36 SS-D arg/1/4clr.090SGP 1/4clr	0.38	0.31
114			1/4-TiAC23/ SS-D air/1/4clr.090SGP 1/4clr	0.41	0.21
115			1/4-TiAC23/ SS-D arg/1/4clr.090SGP 1/4clr	0.38	0.20
116			1/4-ADV/ SS-D air/1/4clr.090SGP 1/4clr	0.44	.053
117			1/4-ADV/ SS-D arg/1/4clr.090SGP 1/4clr	0.41	0.53
118			1/4-SG100/ SS-D air/1/4clr.090SGP 1/4clr	0.42	0.47
119			1/4-SB80/ SS-D air/1/4clr.090SGP 1/4clr	0.41	0.21

Manuel Perez

Manuel Perez, P.E.
Product Control Examiner
NOA No. 15-0526.11
Expiration Date: July 07, 2020
Approval Date: October 08, 2015

GREEN SUSTAINABLE ATTRIBUTES (GSA) (CONTINUED)

ID#	Test Report#:	Product Description	Glazing Components:	G.8: U-Factor	G.9: SHGC
120			1/4-SB80/ SS-D arg/1/4clr.090SGP 1/4clr	0.37	0.21
121			1/4-clr/ ZF-S air/1/4clr.030 pvb 1/4clr	0.55	0.58
122			1/4-clr/ ZF-S arg/1/4clr.030 pvb 1/4clr	0.53	0.58
123			1/4-SB60/ ZF-S air/1/4clr.030 pvb 1/4clr	0.41	0.33
124			1/4-SB60/ ZF-S arg/1/4clr.030 pvb 1/4clr	0.37	0.33
125			1/4-SB60ATL/ ZF-S air/1/4clr.030 pvb 1/4clr	0.41	0.24
126			1/4-SB70/ ZF-S air/1/4clr.030 pvb 1/4clr	0.40	0.24
127			1/4-SB70/ ZF-S arg/1/4clr.030 pvb 1/4clr	0.37	0.24
128			1/4-VE185/ ZF-S air/1/4clr.030 pvb 1/4clr	0.42	0.47
129			1/4-VE185/ ZF-S arg/1/4clr.030 pvb 1/4clr	0.39	0.47
130			1/4-VE12M/ ZF-S air/1/4clr.030 pvb 1/4clr	0.41	0.33
131			1/4-VE12M/ ZF-S arg/1/4clr.030 pvb 1/4clr	0.37	0.33
132			1/4-TiAC36/ ZF-S air/1/4clr.030 pvb 1/4clr	0.41	0.31
133			1/4-TiAC36 ZF-S arg/1/4clr.030 pvb 1/4clr	0.37	0.31
134			1/4-TiAC23/ ZF-S air/1/4clr.030 pvb 1/4clr	0.41	0.21
135			1/4-TiAC23/ ZF-S arg/1/4clr.030 pvb 1/4clr	0.37	0.20
136			1/4-ADV/ ZF-S air/1/4clr.030 pvb 1/4clr	0.44	0.53
137			1/4-ADV/ ZF-S arg/1/4clr.030 pvb 1/4clr	0.41	0.53
138			1/4-SG100/ ZF-S air/1/4clr.030 pvb 1/4clr	0.42	0.47
139			1/4-SB80/ ZF-S air/1/4clr.030 pvb 1/4clr	0.40	0.21
140	ATI 87798.02-116-45	BT601	1/4-SB80/ ZF-S arg/1/4clr.030 pvb 1/4clr	0.37	0.21
141			1/4-clr/ ZF-S air/1/4clr.090SGP 1/4clr	0.54	0.58
142			1/4-clr/ ZF-S arg/1/4clr.090SGP 1/4clr	0.52	0.58
143			1/4-SB60/ ZF-S air/1/4clr.090SGP 1/4clr	0.40	0.33
144			1/4-SB60/ ZF-S arg/1/4clr.090SGP 1/4clr	0.37	0.33
145			1/4-SB60ATL/ ZF-S air/1/4clr.090SGP 1/4clr	0.40	0.24
146			1/4-SB70/ ZF-S air/1/4clr.090SGP 1/4clr	0.40	0.24
147			1/4-SB70/ ZF-S arg/1/4clr.090SGP 1/4clr	0.36	0.24
148			1/4-VE185/ ZF-S air/1/4clr.090SGP 1/4clr	0.42	0.47
149			1/4-VE185/ ZF-S arg/1/4clr.090SGP 1/4clr	0.38	0.47
150			1/4-VE12M/ ZF-S air/1/4clr.090SGP 1/4clr	0.40	0.33
151			1/4-VE12M/ ZF-S arg/1/4clr.090SGP 1/4clr	0.37	0.33
152			1/4-TiAC36/ ZF-S air/1/4clr.090SGP 1/4clr	0.40	0.31
153			1/4-TiAC36 ZF-S arg/1/4clr.090SGP 1/4clr	0.37	0.31
154			1/4-TiAC23/ ZF-S air/1/4clr.090SGP 1/4clr	0.40	0.21
155			1/4-TiAC23/ ZF-S arg/1/4clr.090SGP 1/4clr	0.37	0.20
156			1/4-ADV/ ZF-S air/1/4clr.090SGP 1/4clr	0.43	0.53
157			1/4-ADV/ ZF-S arg/1/4clr.090SGP 1/4clr	0.40	0.53
158			1/4-SG100/ ZF-S air/1/4clr.090SGP 1/4clr	0.42	0.47
159			1/4-SB80/ ZF-S air/1/4clr.090SGP 1/4clr	0.40	0.21
160			1/4-SB80/ ZF-S arg/1/4clr.090SGP 1/4clr	0.36	0.21

Manuel Perez

Manuel Perez, P.E.
Product Control Examiner
NOA No. 15-0526.11
Expiration Date: July 07, 2020
Approval Date: October 08, 2015

GREEN SUSTAINABLE ATTRIBUTES (GSA) (CONTINUED)

Legend	
Abreviation:	**Description:**
A1-D	Standard Aluminum Spacer
CU-D	Intercept Spacer
SS-D	Stainless Steel Spacer
ZF-S	Edgetech Super Spacer
Low E	Low E @ #2 Surface Typical
air	Pure air space
arg	90% Argon
PVB	Poly Vinyl Butyral (PVB) interlayer
SGP	SentryGlas interlayer
Clr	Clear glass
SB60	PPG Solarban 60, 70, etc.
ATL	PPG Atlantica
VE185	Viracon 185, 12M, etc.
TiAC	ACG Ti AC36, 23, etc.
ADV	Pilkington Advantage Low E

Manuel Perez

Manuel Perez, P.E.
Product Control Examiner
NOA No. 15-0526.11
Expiration Date: July 07, 2020
Approval Date: October 08, 2015

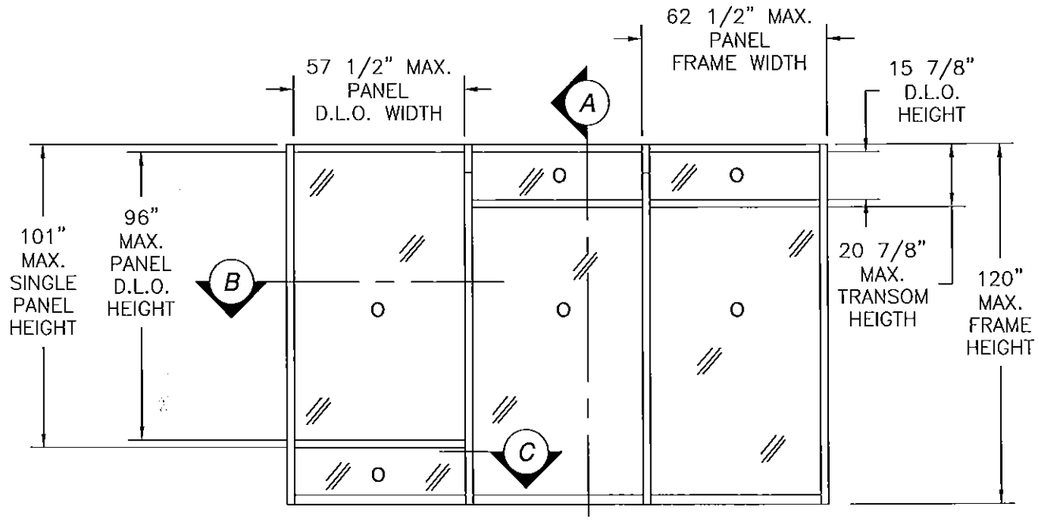

SERIES BT601/IT600 STORM FRONT ALUMINUM STOREFRONT

EXTERIOR VIEW

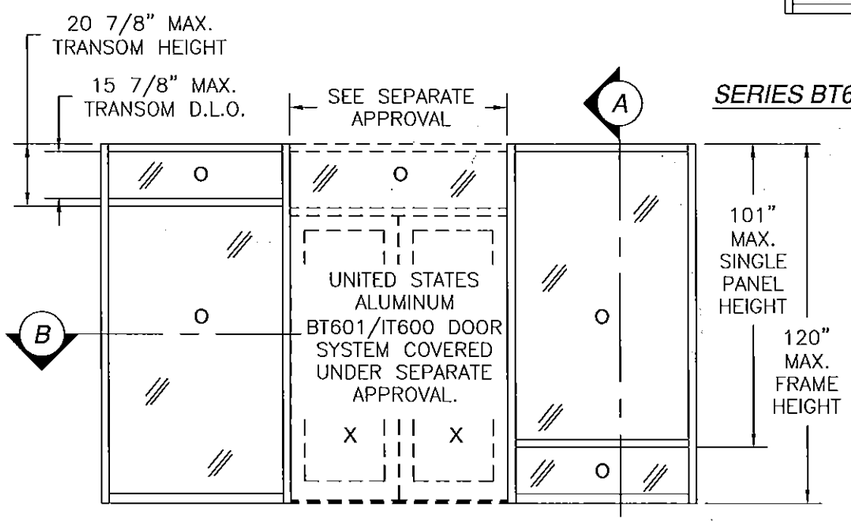

SERIES BT601/IT600 STORM FRONT ALUMINUM STOREFRONT WITH DOUBLE DOOR

EXTERIOR VIEW

DESIGN PRESSURE RATING	*IMPACT RATING*
±65PSF	*LARGE MISSILE IMPACT*

REVISIONS			
REV	DESCRIPTION	DATE	APPROVED
A	PER DADE LETTER DATED 5/27/10	06/02/10	R.L.
B	ADDED GLAZING DETAIL 2	02/01/11	R.L.
C	REVISED COMPANY'S NAME	05/08/15	R.L.

NOTES:

1) THE PRODUCT SHOWN HEREIN IS DESIGNED AND MANUFACTURED TO COMPLY WITH REQUIREMENTS OF THE FLORIDA BUILDING CODE INCLUDING THE HVHZ.
2) WOOD FRAMING, STEEL FRAMING AND MASONRY OPENING TO BE DESIGNED AND ANCHORED TO PROPERLY TRANSFER ALL LOADS TO STRUCTURE. FRAMING AND MASONRY OPENING IS THE RESPONSIBILITY OF THE ARCHITECT OR ENGINEER OF RECORD.
3) ALLOWABLE STRESS INCREASE OF 1/3 WAS NOT USED IN THE DESIGN OF THE PRODUCT SHOWN HEREIN. WIND LOAD DURATION FACTOR Cd=1.6 WAS USED FOR WOOD ANCHOR CALCULATIONS.
4) FRAME MATERIAL: EXTRUDED ALUMINUM 6063–T5 .080" THICK.
5) UNITS MUST BE GLAZED WITH 1 5/16" IGU CONSISTING OF: 1/4" HS EXTERIOR PANEL – AIR – LAMINATED INTERIOR PANEL CONSISTING OF 1/4" HS – .090 SENTRYGLAS BY KURARAY AMERICA, INC. – 1/4" HS OR 1/4" TEMPERED EXTERIOR PANEL – AIR – LAMINATED INTERIOR PANEL CONSISTING OF 1/4" HS – .090 DUPONT SGP – 1/4" HS
PER ASTM E1300–04. THIS IS A DRY GLAZED SYSTEM.
6) APPROVED IMPACT PROTECTIVE SYSTEM <u>IS NOT REQUIRED</u> FOR THIS PRODUCT IN WIND BORNE DEBRIS REGIONS ON INSTALLATIONS UP TO 30' ABOVE GRADE.
7) APPROVED CONFIGURATIONS: THREE UNIT SHOWN, MAY BE INSTALLED AS SINGLES OR MULTIPLES WITH AND WITHOUT TRANSOMS AS LONG AS INDIVIDUAL UNIT SIZE DOES NOT EXCEED PANEL SIZE SHOWN HEREIN.
8) ALL GLASS ADJACENT TO DOORS NEED TO BE SAFETY GLASS ON EXTERIOR AND INTERIOR. SEE GLAZING DETAIL 2 SHEET 3.

SIGNED: 10/07/2015

TABLE OF CONTENTS

SHEET NO.	DESCRIPTION
1	ELEVATIONS AND NOTES
2	ANCHORING LAYOUT AND NOTES
3	BILL OF MATERIALS AND GLAZING DETAILS
4	CROSS SECTIONS
5 – 7	INSTALLATION DETAILS
8	COMPONENTS
9	FRAME ASSEMBLY DETAIL

PRODUCT REVISED
as complying with the Florida
Building Code
Acceptance No 15-0526.11
Expiration Date July 7, 2020
By Manuel Perez
Miami-Dade Product Control

US ALUMINUM
DIVISION OF C.R. LAURENCE CO., INC.
2503 E. VERNON AVE, LOS ANGELES, CA 90058

SERIES BT601/IT600 STORM FRONT ALUMINUM STOREFRONT – LMI
ELEVATION AND NOTES

DRAWN:	DWG NO.	REV
TJH	08–00919	C
SCALE NTS	DATE 01/13/10	SHEET 1 OF 9

LUIS R. LOMAS
LICENSE No. 6251
STATE OF FLORIDA
PROFESSIONAL ENGINEER

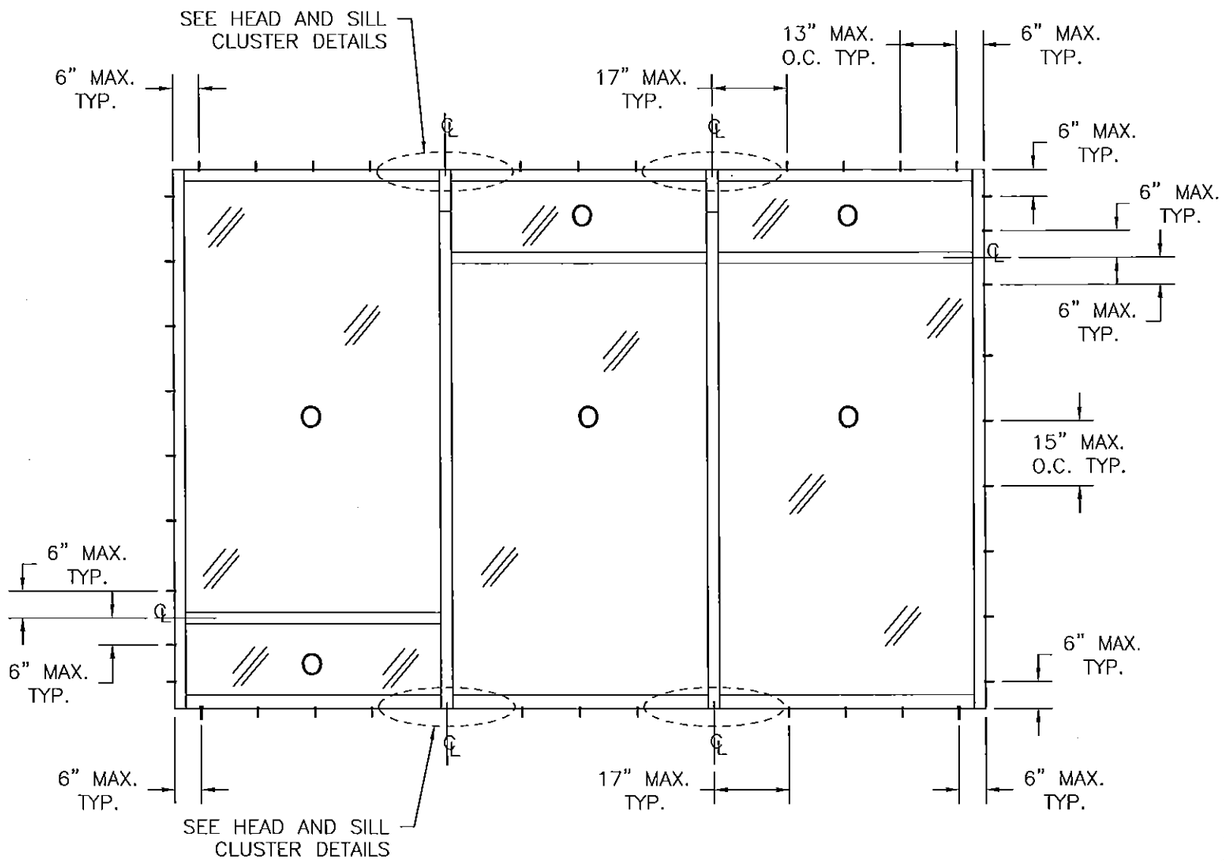

SERIES BT601/IT600 ALUMINUM FIXED STORE FRONT
EXTERIOR VIEW

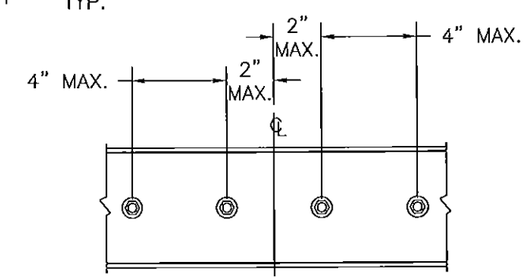

HEAD AND SILL SILL CLUSTER DETAIL
CONCRETE AND STEEL FRAMING INSTALLATION

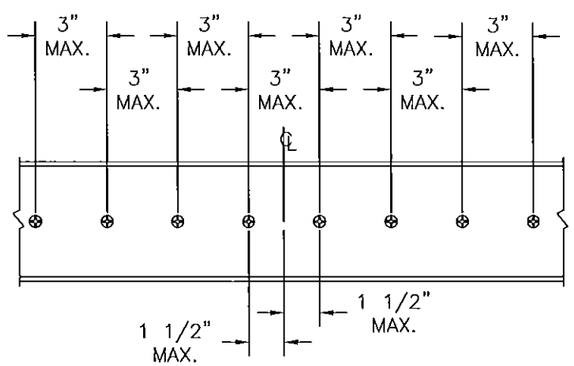

HEAD AND SILL CLUSTER DETAIL
WOOD FRAMING FRAMING INSTALLATION

REVISIONS

REV	DESCRIPTION	DATE	APPROVED
A	PER DADE LETTER DATED 5/27/10	06/02/10	R.L.
B	ADDED GLAZING DETAIL 2	02/01/11	R.L.
C	REVISED COMPANY'S NAME	05/08/15	R.L.

1) SHIM AS REQUIRED AT EACH INSTALLATION ANCHOR WITH LOAD BEARING SHIM. SHIM WHERE SPACE OF 1/16" OR GREATER OCCURS. MAXIMUM ALLOWABLE SHIM STACK TO BE 1/2".
2) FOR ANCHORING HEAD, SILL AND JAMBS INTO CONCRETE USE 3/8" POWER-BOLT ANCHORS WITH SUFFICIENT LENGTH TO ACHIEVE A 2" MINIMUM EMBEDMENT INTO SUBSTRATE WITH 3" MINIMUM EDGE DISTANCE.
3) FOR ANCHORING HEAD, SILL AND JAMBS INTO WOOD FRAMING USE 3/8" GRADE 5 LAG SCREWS WITH SUFFICIENT LENGTH TO ACHIEVE A 1 7/8" MINIMUM EMBEDMENT INTO SUBSTRATE.
4) FOR ANCHORING HEAD, SILL AND JAMBS INTO 16GA. MINIMUM STEEL FRAME USE 3/8" SELF TAPPING SCREWS WITH SUFFICIENT LENGTH TO ACHIEVE 3-THREADS MINIMUM EMBEDMENT BEYOND STEEL FRAMING.
5) ALL FASTENERS TO BE CORROSION RESISTANT.
6) INSTALLATION ANCHORS SHALL BE INSTALLED IN ACCORDANCE WITH ANCHOR MANUFACTURER'S INSTALLATION INSTRUCTIONS, AND ANCHORS SHALL NOT BE USED IN SUBSTRATES WITH STRENGTHS LESS THAN THE MINIMUM STRENGTH SPECIFIED BELOW:
   A. WOOD – MINIMUM SPECIFIC GRAVITY OF G=0.42
   B. CONCRETE – MINIMUM COMPRESSIVE STRENGTH OF 2,000 PSI.
   C. STEEL FRAMING – 12GA. (.120") MINIMUM STEEL STUD.
7) ALL DISSIMILAR MATERIALS MUST BE SEPARATED PER STANDARD INSTALLATION PRACTICES.

SIGNED: 10/07/2015

PRODUCT REVISED
as complying with the Florida
Building Code
Acceptance No 15-0526.11
Expiration Date July 7, 2020
By Manuel Perez
Miami Dade Product Control

US ALUMINUM
DIVISION OF C.R. LAURENCE CO., INC.
2503 E. VERNON AVE, LOS ANGELES, CA 90058

SERIES BT601/IT600 STORM FRONT ALUMINUM
STOREFRONT – LMI
ANCHORING LAYOUT AND NOTES

DRAWN: TJH	DWG NO. 08-00919	REV C
SCALE NTS	DATE 01/13/10	SHEET 2 OF 9

LUIS R. LOMAS
LICENSE
No. 6251
STATE OF FLORIDA
PROFESSIONAL ENGINEER

PARTS LIST				
NO.	PART NUMBER	DESCRIPTION	MANUFACTURER	MATERIAL
1	BT872	SILL	US ALUMINUM	ALUMINUM 6063–T5
2	BT870	SUB–SILL	US ALUMINUM	ALUMINUM 6063–T5
3	BT852	HEAD	US ALUMINUM	ALUMINUM 6063–T5
4	BT805	JAMB	US ALUMINUM	ALUMINUM 6063–T5
5	BR863	GLASS STOP	US ALUMINUM	ALUMINUM 6063–T5
6	SB117	SETTING BLOCK	US ALUMINUM	EPDM
7	BT804	BT601 SHALLOW POCKET INSERT	US ALUMINUM	ALUMINUM 6063–T5
8	BT815	BT601 VERTICAL MULLION	US ALUMINUM	ALUMINUM 6063–T5
9	BT835	BT601 HEAVY DUTY VERTICAL MULL	US ALUMINUM	ALUMINUM 6063–T5
10		8GA. STEEL STIFFENER HEAVY	US ALUMINUM	A36 MILD STEEL
11	NP225	TOP LOAD GASKET	US ALUMINUM	EPDM
12	SP250	GLAZING SEAL	US ALUMINUM	SCR
13	DOW 995	GLAZING COMPOUND	DOW CORNING	SILICONE
14	CP801	VERTICAL CLOSER PLATE	US ALUMINUM	50 DUROMETER TPR
15	BT862	HORIZONTAL MULL	US ALUMINUM	ALUMINUM 6063–T5
16	ST035	#10 x 5/8" FH SMS		
17	WD912	DEEP WATER DEFLECTOR	US ALUMINUM	NYLON
18	WD911	SHALLOW WATER DEFLECTOR	US ALUMINUM	NYLON
19		LARGE MISSILE IMPACT GLASS		
20	EC801	SUB–SILL END DAM	US ALUMINUM	A–245
21	ST266	#12 x 1" HWH SMS		
22	ST268	#12 x 3/4" HWH SMS		
23	PROGLAZE SSG	GLAZING COMPOUND	TREMCO	SILICONE
24	SPECTRUM 2	PERIMETER SEAL	TREMCO	SILICONE
25	DOW 795	PERIMETER SEAL	DOW CORNING	SILICONE
26	WD913	DEEP WATER DEFLECTOR	US ALUMINUM	NYLON

REVISIONS			
REV	DESCRIPTION	DATE	APPROVED
A	PER DADE LETTER DATED 5/27/10	06/02/10	R.L.
B	ADDED GLAZING DETAIL 2	02/01/11	R.L.
C	REVISED COMPANY'S NAME	05/08/15	R.L.

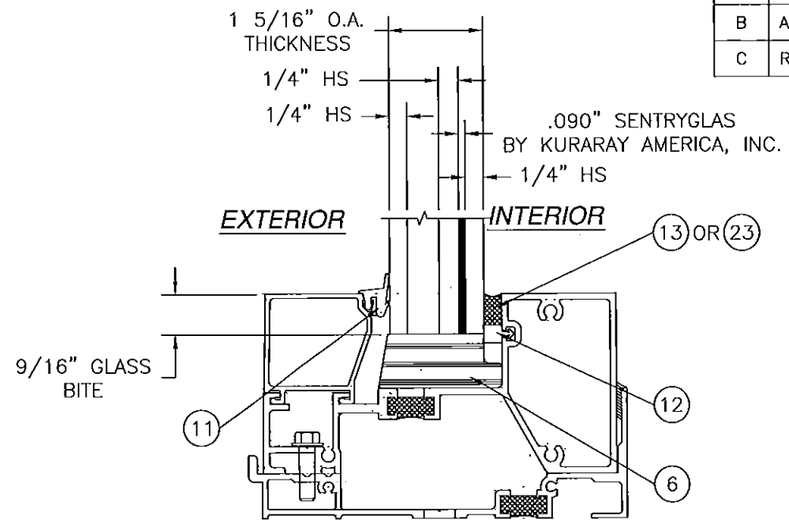

GLAZING DETAIL 1
1 5/16" IGU LAMINATED GLASS

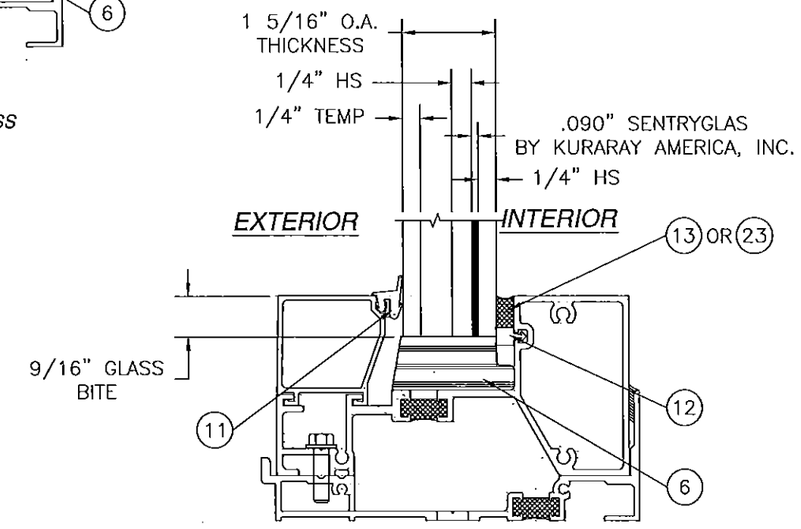

GLAZING DETAIL 2
1 5/16" IGU LAMINATED GLASS

SIGNED: 10/07/2015

PRODUCT REVISED
as complying with the Florida Building Code
Acceptance No 150526.11
Expiration Date July 1, 2020
By Manuel Perez
Miami Dade Product Control

US ALUMINUM
DIVISION OF C.R. LAURENCE CO., INC.
2503 E. VERNON AVE, LOS ANGELES, CA 90058

SERIES BT601/IT600 STORM FRONT ALUMINUM STOREFRONT – LMI
BILL OF MATERIALS AND GLAZING DETAILS

DRAWN: TJH	DWG NO. 08–00919	REV C
SCALE NTS	DATE 01/13/10	SHEET 3 OF 9

LUIS R. LOMAS LICENSE No. 6251 STATE OF FLORIDA PROFESSIONAL ENGINEER

REVISIONS			
REV	DESCRIPTION	DATE	APPROVED
A	PER DADE LETTER DATED 5/27/10	06/02/10	R.L.
B	ADDED GLAZING DETAIL 2	02/01/11	R.L.
C	REVISED COMPANY'S NAME	05/08/15	R.L.

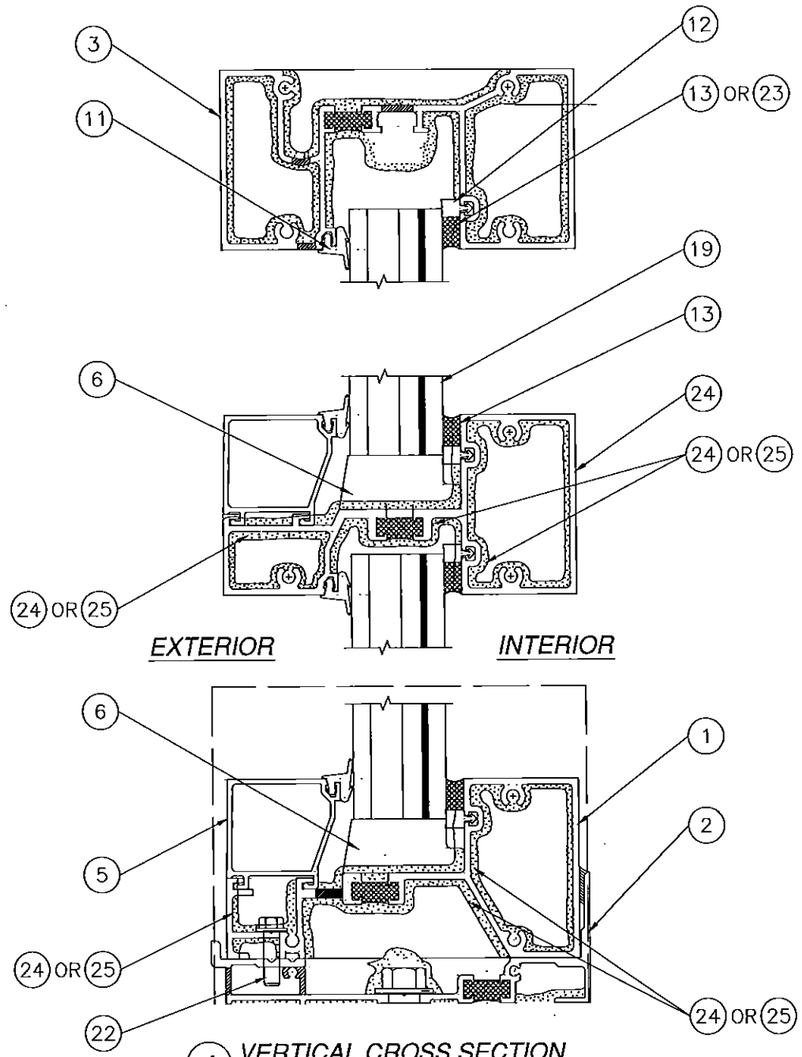

A VERTICAL CROSS SECTION

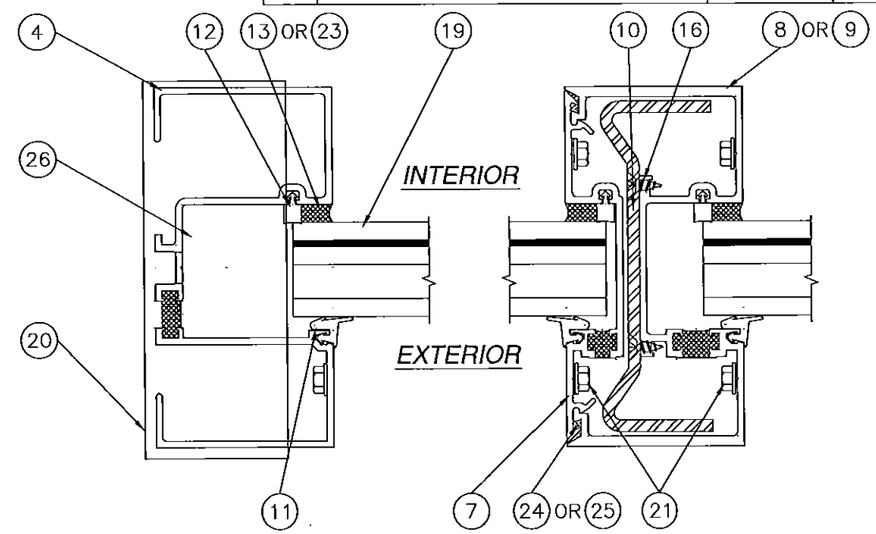

B HORIZONTAL CROSS SECTION

MULLION ASSEMBLY PROPERTIES
TOTAL Ix (IN TERMS OF ALUMINUM): 18.6538 in^4
Sx ALUMINUM: 7.307 in^3

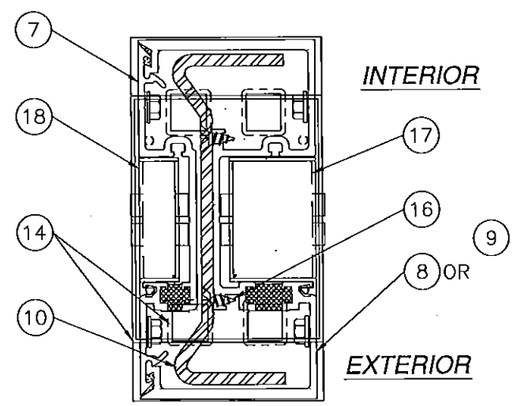

C HORIZONTAL CROSS SECTION

SIGNED: 10/07/2015

PRODUCT REVISED
as complying with the Florida
Building Code
Acceptance No 15-0526.11
Expiration Date July 1, 2020
By Manuel Perez
Miami Dade Product Control

US ALUMINUM
DIVISION OF C.R. LAURENCE CO., INC.
2503 E. VERNON AVE, LOS ANGELES, CA 90058

SERIES BT601/IT600 STORM FRONT ALUMINUM
STOREFRONT – LMI
CROSS SECTIONS

DRAWN:	DWG NO.	REV
TJH	08–00919	C
SCALE NTS	DATE 01/13/10	SHEET 4 OF 9

LUIS R. LOMAS
LICENSE
No. 6251
STATE OF
FLORIDA
PROFESSIONAL ENGINEER

REVISIONS			
REV	DESCRIPTION	DATE	APPROVED
A	PER DADE LETTER DATED 5/27/10	06/02/10	R.L.
B	ADDED GLAZING DETAIL 2	02/01/11	R.L.
C	REVISED COMPANY'S NAME	05/08/15	R.L.

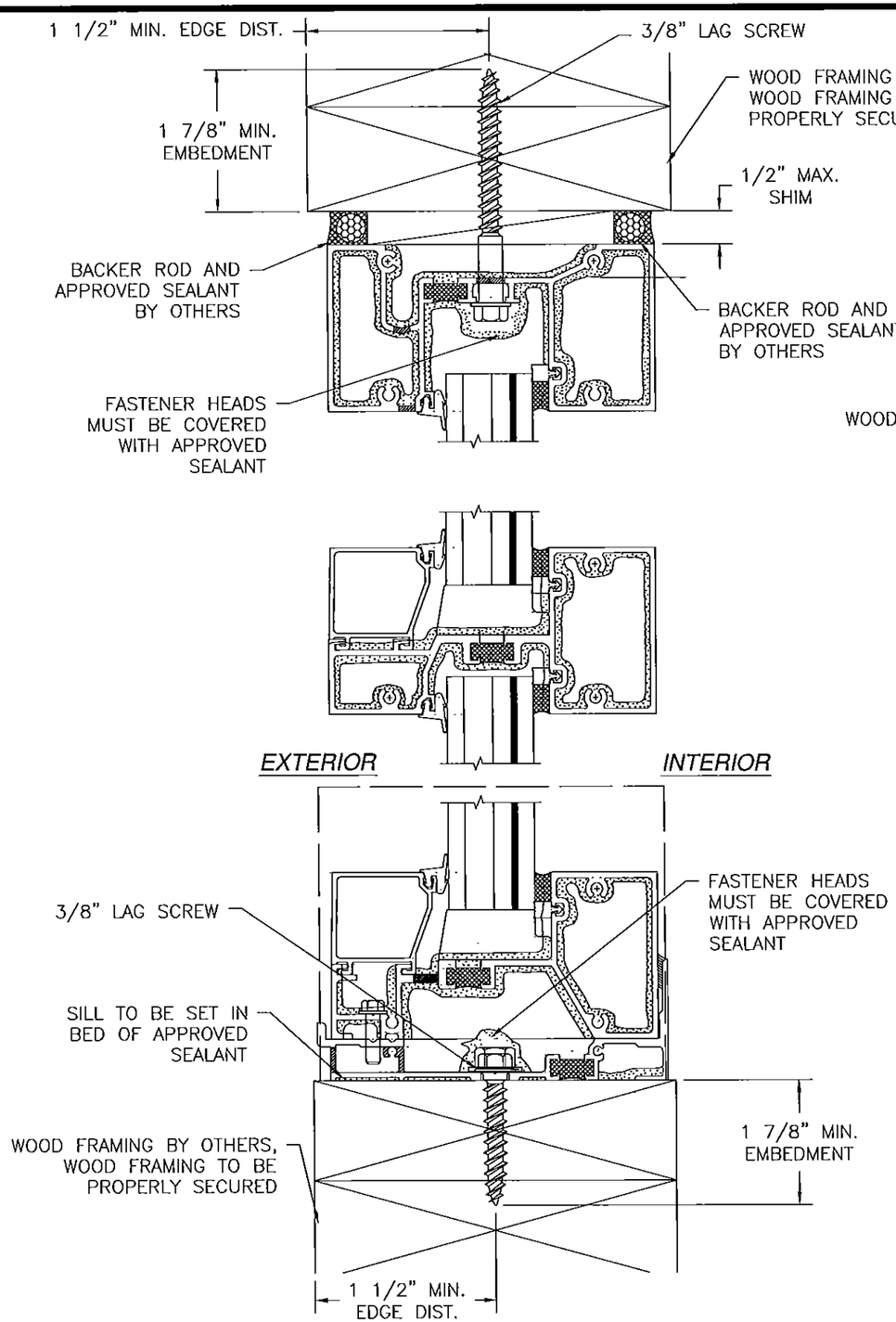

A VERTICAL CROSS SECTION
WOOD FRAMING INSTALLATION

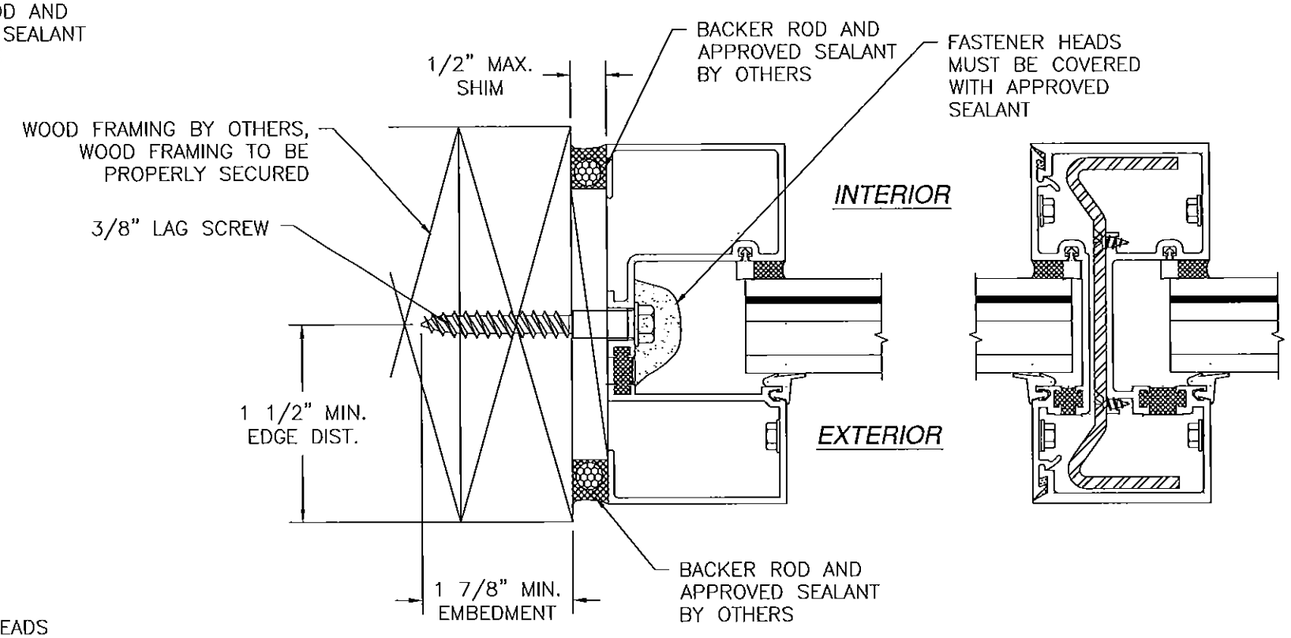

B HORIZONTAL CROSS SECTION
WOOD FRAMING INSTALLATION

SIGNED: 10/07/2015

PRODUCT REVISED
as complying with the Florida Building Code
Acceptance No 15-0526.11
Expiration Date July 7 2020
By Manuel Perez
Miami-Dade Product Control

US ALUMINUM
DIVISION OF C.R. LAURENCE CO., INC.
2503 E. VERNON AVE, LOS ANGELES, CA 90058

SERIES BT601/IT600 STORM FRONT ALUMINUM STOREFRONT – LMI INSTALLATION DETAILS

DRAWN: TJH	DWG NO. 08-00919	REV C
SCALE NTS	DATE 01/13/10	SHEET 5 OF 9

LUIS R. LOMAS LICENSE No. 62514 STATE OF FLORIDA PROFESSIONAL ENGINEER

REVISIONS			
REV	DESCRIPTION	DATE	APPROVED
A	PER DADE LETTER DATED 5/27/10	06/02/10	R.L.
B	ADDED GLAZING DETAIL 2	02/01/11	R.L.
C	REVISED COMPANY'S NAME	05/08/15	R.L.

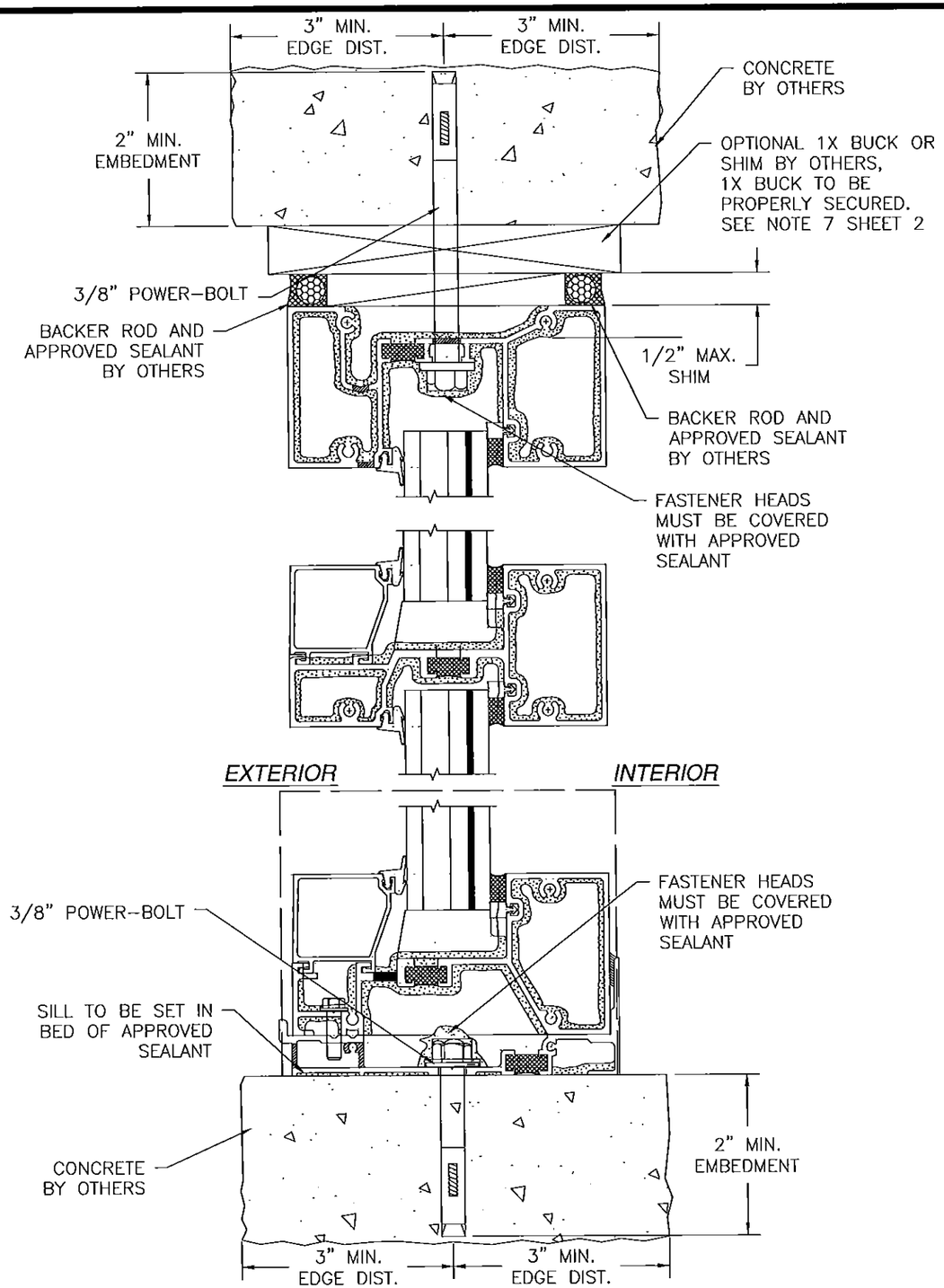

A VERTICAL CROSS SECTION
CONCRETE INSTALLATION

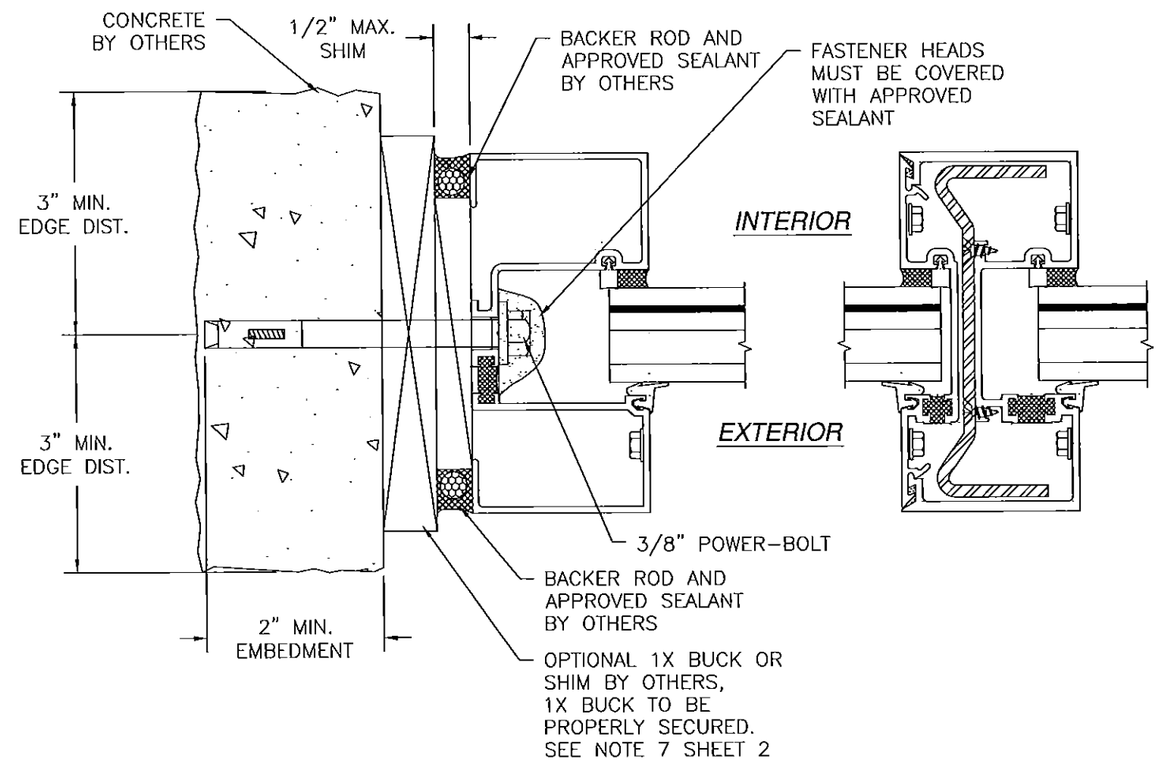

B HORIZONTAL CROSS SECTION
CONCRETE INSTALLATION

SIGNED: 10/07/2015

PRODUCT REVISED
as complying with the Florida Building Code
Acceptance No 15-0526.11
Expiration Date July 7, 2020
By Manuel Perez
Miami-Dade Product Control

US ALUMINUM
DIVISION OF C.R. LAURENCE CO., INC.
2503 E. VERNON AVE, LOS ANGELES, CA 90058

SERIES BT601/IT600 STORM FRONT ALUMINUM STOREFRONT – LMI
INSTALLATION DETAILS

DRAWN:	DWG NO.	REV
TJH	08-00919	C
SCALE NTS	DATE 01/13/10	SHEET 6 OF 9

LUIS R. LOMAS
LICENSE No. 62514
STATE OF FLORIDA
PROFESSIONAL ENGINEER

REVISIONS			
REV	DESCRIPTION	DATE	APPROVED
A	PER DADE LETTER DATED 5/27/10	06/02/10	R.L.
B	ADDED GLAZING DETAIL 2	02/01/11	R.L.
C	REVISED COMPANY'S NAME	05/08/15	R.L.

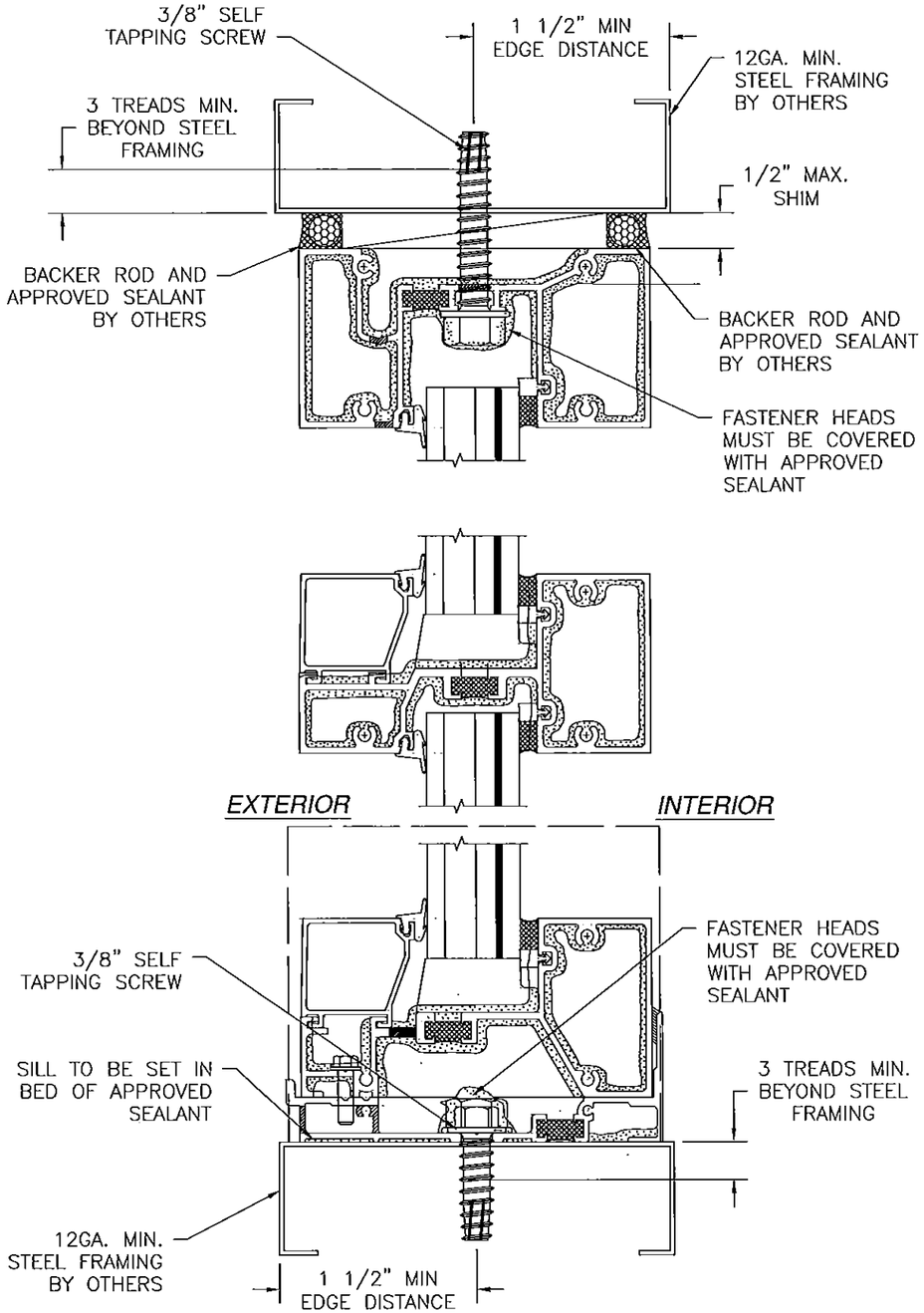

A VERTICAL CROSS SECTION
STEEL FRAMING INSTALLATION

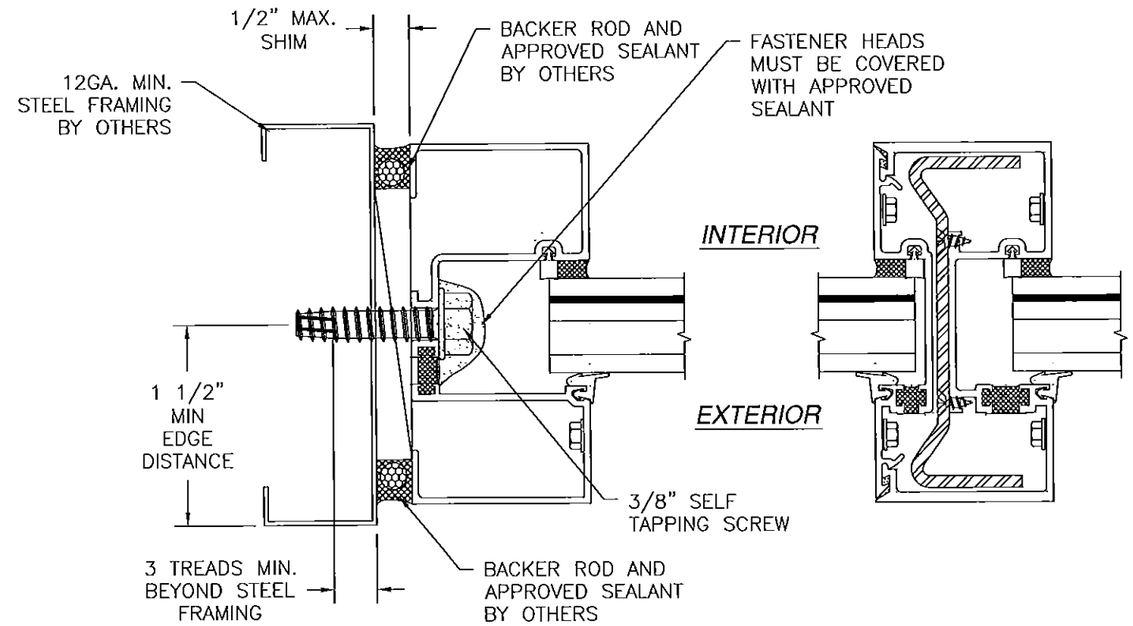

B HORIZONTAL CROSS SECTION
STEEL FRAMING INSTALLATION

SIGNED: 10/07/2015

PRODUCT REVISED
as complying with the Florida Building Code
Acceptance No 15-0526.11
Expiration Date July 7, 2020
By Manuel Perez
Miami Dade Product Control

US ALUMINUM
DIVISION OF C.R. LAURENCE CO., INC.
2503 E. VERNON AVE, LOS ANGELES, CA 90058

SERIES BT601/IT600 STORM FRONT ALUMINUM STOREFRONT – LMI
INSTALLATION DETAILS

DRAWN: TJH	DWG NO. 08-00919	REV C
SCALE NTS	DATE 01/13/10	SHEET 7 OF 9

LUIS R. LOMAS
LICENSE No. 6251
STATE OF FLORIDA
PROFESSIONAL ENGINEER

REVISIONS			
REV	DESCRIPTION	DATE	APPROVED
A	PER DADE LETTER DATED 5/27/10	06/02/10	R.L.
B	ADDED GLAZING DETAIL 2	02/01/11	R.L.
C	REVISED COMPANY'S NAME	05/08/15	R.L.

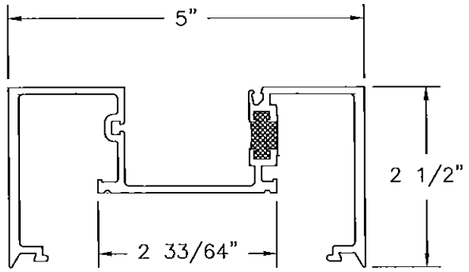

(8) BT601 VERTICAL MULLION
EXTRUDED ALUMINUM 6063-T5 .095" THICK

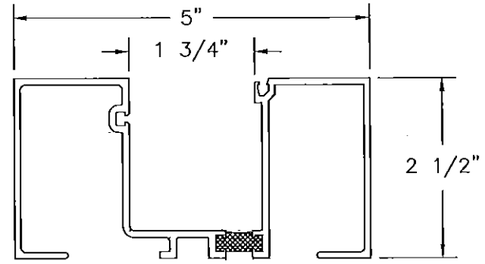

(4) JAMB
EXTRUDED ALUMINUM
6063-T5 .095" THICK

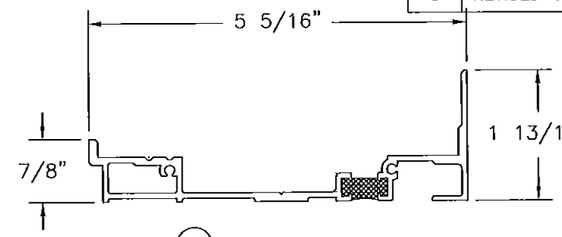

(2) SUB-SILL
EXTRUDED ALUMINUM
6063-T5 .075" THICK

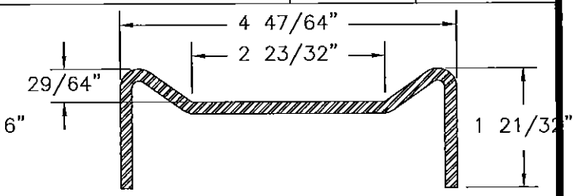

(10) STEEL STIFFENER HEAVY
FORMED 8GA. A36 MILD STEEL

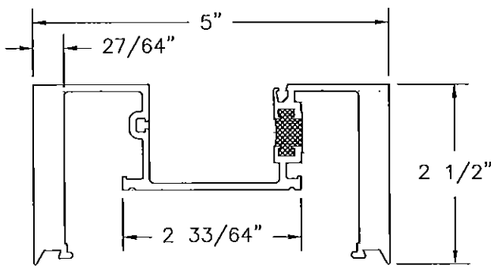

(9) BT601 HEAVY DUTY VERTICAL MULLION
EXTRUDED ALUMINUM 6063-T5 .095" THICK

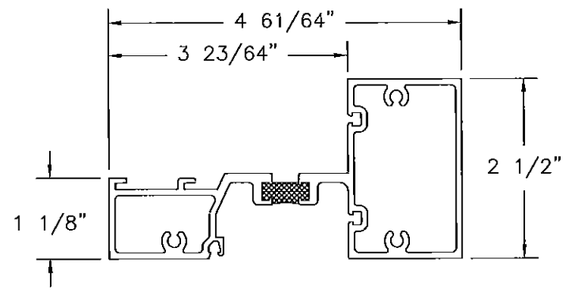

(15) HORIZONTAL MULL
EXTRUDED ALUMINUM
6063-T5 .085" THICK

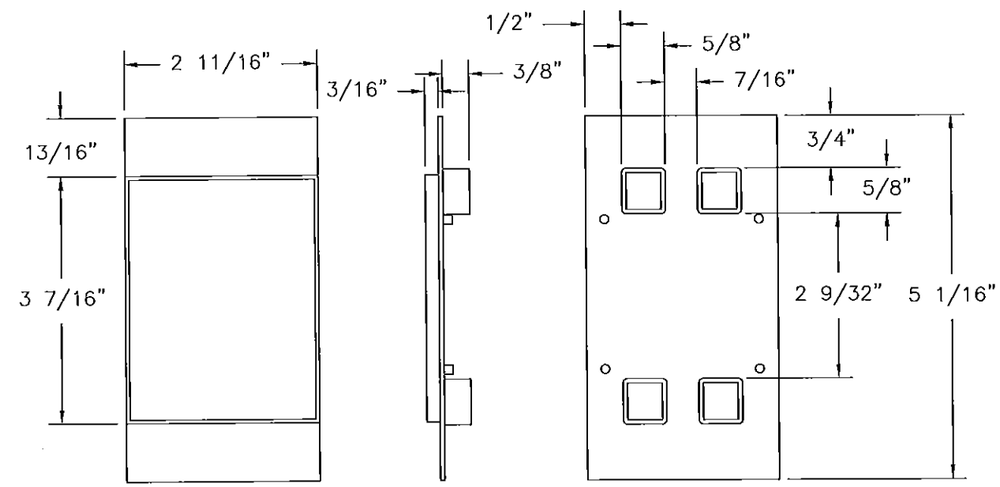

(14) VERTICAL CLOSER PLATE
TPR 50 DUROMERTER .062" THICK

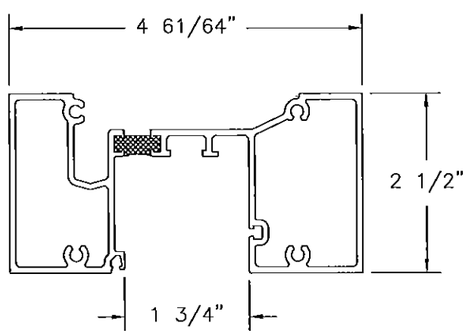

(3) HEAD
EXTRUDED ALUMINUM
6063-T5 .085" THICK

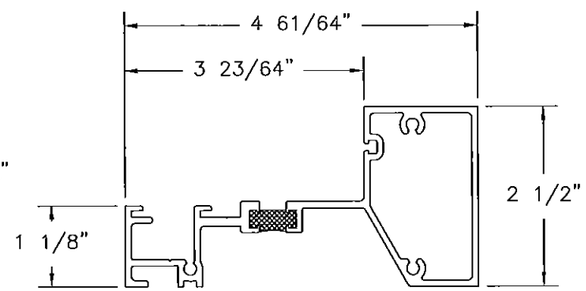

(1) SILL
EXTRUDED ALUMINUM
6063-T5 .095" THICK

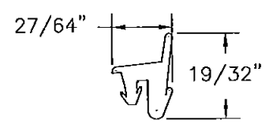

(11) TOP LOAD GASKET
EDPM

SIGNED: 10/07/2015

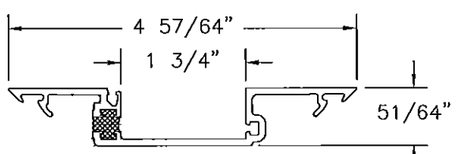

(7) BT601SHALLOW POCKET INSERT
EXTRUDED ALUMINUM 6063-T5 .095" THICK

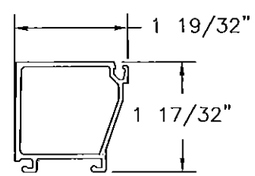

(5) GLASS STOP
EXTRUDED ALUMINUM
6063-T5 .062" THICK

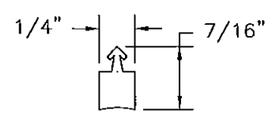

(12) GLAZING SEAL
SCR

PRODUCT REVISED
as complying with the Florida
Building Code
Acceptance No 15-0526.11
Expiration Date July 7, 2020
By Manuel Perez
Miami-Dade Product Control

US ALUMINUM
DIVISION OF C.R. LAURENCE CO., INC.
2503 E. VERNON AVE, LOS ANGELES, CA 90058

SERIES BT601/IT600 STORM FRONT ALUMINUM
STOREFRONT – LMI
COMPONENTS

DRAWN: TJH	DWG NO. 08–00919	REV C
SCALE NTS	DATE 01/13/10	SHEET 8 OF 9

LUIS R. LOMAS
LICENSE
No. 6251
STATE OF
FLORIDA
PROFESSIONAL ENGINEER

REVISIONS			
REV	DESCRIPTION	DATE	APPROVED
A	PER DADE LETTER DATED 5/27/10	06/02/10	R.L.
B	ADDED GLAZING DETAIL 2	02/01/11	R.L.
C	REVISED COMPANY'S NAME	05/08/15	R.L.

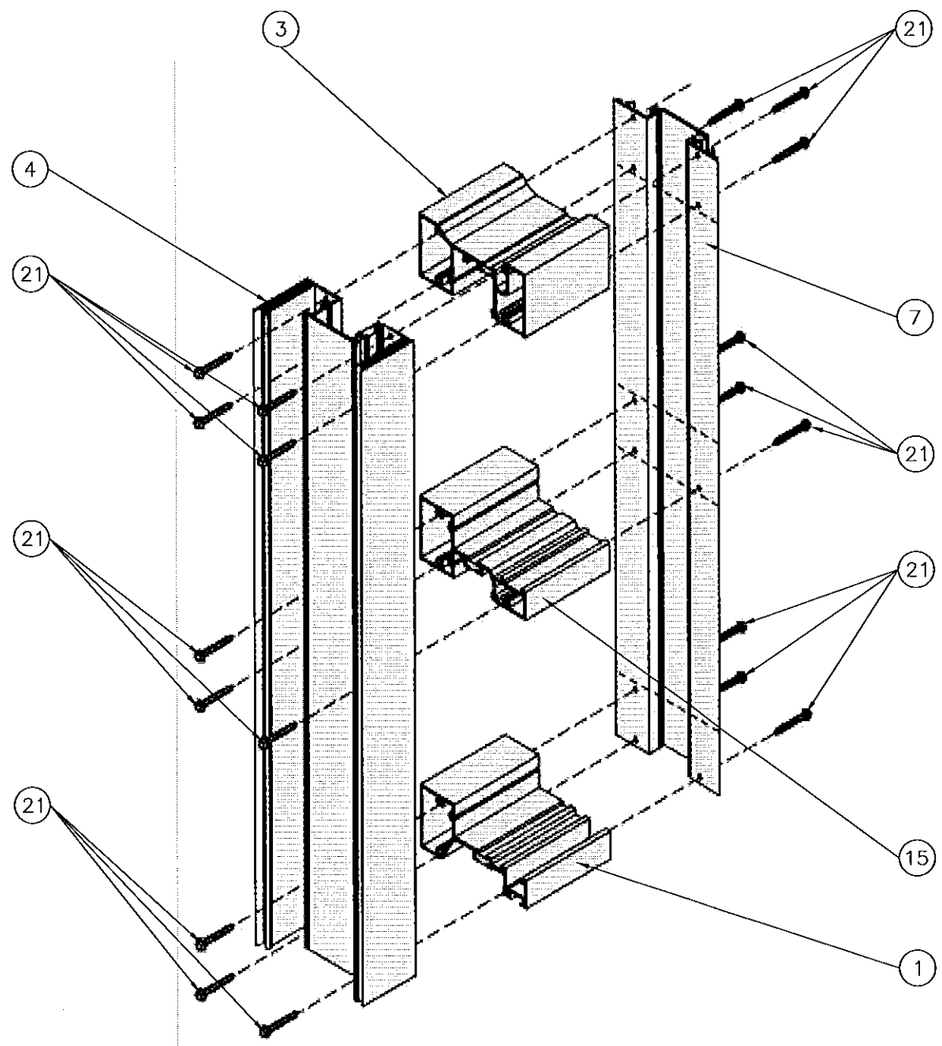

FRAME ASSEMBLY DETAIL

SIGNED: 10/07/2015

PRODUCT REVISED
as complying with the Florida
Building Code
Acceptance No 15-0526.11
Expiration Date July 7, 2020
By Miami Dade Product Control

US ALUMINUM
DIVISION OF C.R. LAURENCE CO., INC.
2503 E. VERNON AVE, LOS ANGELES, CA 90058

SERIES BT601/IT600 STORM FRONT ALUMINUM
STOREFRONT – LMI
FRAME ASSEMBLY DETAIL

DRAWN:	DWG NO.	REV
TJH	08–00919	C
SCALE NTS	DATE 01/13/10	SHEET 9 OF 9

LUIS R. LOMAS
LICENSE
No. 6261
STATE OF
FLORIDA
PROFESSIONAL ENGINEER