MIAMI-DADE COUNTY
DEPARTMENT OF REGULATORY AND ECONOMIC RESOURCES (RER)
BOARD AND CODE ADMINISTRATION DIVISION

MIAMI-DADE COUNTY
PRODUCT CONTROL SECTION
11805 SW 26 Street, Room 208
T (786) 315-2590 F (786) 315-2599
www.miamidade.gov/economy

NOTICE OF ACCEPTANCE (NOA)

SIW Impact Windows, LLC
975 S. Congress Avenue, # 102
Delray Beach, FL 33445

SCOPE:

This NOA is being issued under the applicable rules and regulations governing the use of construction materials. The documentation submitted has been reviewed and accepted by Miami-Dade County RER-Product Control Section to be used in Miami-Dade County and other areas where allowed by the Authority Having Jurisdiction (AHJ).

This NOA shall not be valid after the expiration date stated below. The Miami-Dade County Product Control Section (In Miami-Dade County) and/ or the AHJ (in areas other than Miami-Dade County) reserve the right to have this product or material tested for quality assurance purposes. If this product or material fails to perform in the accepted manner, the manufacturer will incur the expense of such testing and the AHJ may immediately revoke, modify, or suspend the use of such product or material within their jurisdiction. RER reserves the right to revoke this acceptance, if it is determined by Miami-Dade County Product Control Section that this product or material fails to meet the requirements of the applicable building code.

This product is approved as described herein, and has been designed to comply with the Florida Building Code, including the High Velocity Hurricane Zone.

DESCRIPTION: Series "100 StormSafe" Aluminum Single Hung Window – L.M.I.

APPROVAL DOCUMENT: Drawing No. **W07-07**, titled "S-100 StormSafe Alum Single Hung Wdw. (L.M.I.)", sheets 1 through 5 of 5, dated 01/29/07, with revision **D** dated 12/04/15, prepared by Al-Farooq Corporation, signed and sealed by Javad Ahmad, P.E., bearing the Miami-Dade County Product Control Revision stamp with the Notice of Acceptance number and expiration date by the Miami-Dade County Product Control Section.

MISSILE IMPACT RATING: Large and Small Missile Impact Resistant

LABELING: Each unit shall bear a permanent label with the manufacturer's name or logo, city, state, series, and following statement: "Miami-Dade County Product Control Approved", unless otherwise noted herein.

RENEWAL of this NOA shall be considered after a renewal application has been filed and there has been no change in the applicable building code negatively affecting the performance of this product.

TERMINATION of this NOA will occur after the expiration date or if there has been a revision or change in the materials, use, and/ or manufacture of the product or process. Misuse of this NOA as an endorsement of any product, for sales, advertising or any other purposes shall automatically terminate this NOA. Failure to comply with any section of this NOA shall be cause for termination and removal of NOA.

ADVERTISEMENT: The NOA number preceded by the words Miami-Dade County, Florida, and followed by the expiration date may be displayed in advertising literature. If any portion of the NOA is displayed, then it shall be done in its entirety.

INSPECTION: A copy of this entire NOA shall be provided to the user by the manufacturer or its distributors and shall be available for inspection at the job site at the request of the Building Official.

This NOA **revises NOA No. 12-0221.06** and consists of this page 1 and evidence pages E-1 and E-2, as well as approval document mentioned above.

The submitted documentation was reviewed by **Manuel Perez, P.E.**

MIAMI-DADE COUNTY APPROVED

12/14/15

SIW Impact Windows, LLC

NOTICE OF ACCEPTANCE: EVIDENCE SUBMITTED

A. DRAWINGS

1. Manufacturer's die drawings and sections.
   (Submitted under NOA No. 07-0214.05)
2. Drawing No. **W07-07**, titled "S-100 StormSafe Alum Single Hung Wdw. (L.M.I.)", sheets 1 through 5 of 5, dated 01/29/07, with revision **D** dated 12/04/15, prepared by Al-Farooq Corporation, signed and sealed by Javad Ahmad, P.E.

B. TESTS

1. Test reports on: 1) Air Infiltration Test, per PA 202-94
   2) Uniform Static Air Pressure Test, Loading per FBC, TAS 202-94
   3) Water Resistance Test, per FBC, TAS 202-94
   4) Large Missile Impact Test per FBC, TAS 201-94
   5) Cyclic Wind Pressure Loading per FBC, TAS 203-94
   6) Forced Entry Test, per FBC 2411.3.2.1, and TAS 202-94

   along with marked-up drawings and installation diagram of a series 100 aluminum single hung window, prepared by Hurricane Engineering and Testing, Inc., Test Reports No. **HETI-06-4040, 4041, 4042, 4043, 4044, 4045A, 4045B, 4046, 4047, 4047A, 4047B, 4050** and **2122,** dated 09/21/06, signed and sealed by Rafael E. Dorz-Seda, P.E.
   (Submitted under NOA No. 07-0214.05)

C. CALCULATIONS

1. Anchor verification calculations and structural analysis, complying with **FBC 5th Edition (2014)**, dated 05/27/15 and revised on 12/10/15, prepared by Al-Farooq Corporation, signed and sealed by Javad Ahmad, P.E.
2. Glazing complies with **ASTM E1300-09**.

D. QUALITY ASSURANCE

1. Miami-Dade Department of Regulatory and Economic Resources (RER).

E. MATERIAL CERTIFICATIONS

1. Notice of Acceptance No. **14-0916.11** issued to **Kuraray America, Inc.** for their **"SentryGlas® (Clear and White) Glass Interlayers"** dated 06/25/15, expiring on 07/04/18.
2. Notice of Acceptance No. **14-0423.15** issued to **Eastman Chemical Company (MA)** for their "**Saflex CP - Saflex and Saflex HP Composite Glass Interlayers with PET Core"** dated 06/19/14, expiring on 12/11/18.

Manuel Perez, P.E.
Product Control Examiner
NOA No. 15-0528.18
Expiration Date: May 10, 2017
Approval Date: December 24, 2015

NOTICE OF ACCEPTANCE: EVIDENCE SUBMITTED

F. STATEMENTS

1. Statement letter of conformance, complying with **FBC 5th Edition (2014)**, and of no financial interest, dated 05/19/15, issued by Al-Farooq Corporation, signed and sealed by Javad Ahmad, P.E.
2. Laboratory compliance letter for Test Reports No.'s **HETI-06-4040, 4041, 4042, 4043, 4044, 4045A, 4045B, 4046, 4047, 4047A, 4047B, 4050** and **2122**, issued by Hurricane Engineering & Testing, Inc., dated 09/21/06, signed and sealed by Rafael E. Dorz-Seda, P.E.
   (Submitted under NOA No. 07-0214.05)

G. OTHERS

1. Notice of Acceptance No. **12-0221.06**, issued to SIW Impact Windows, LLC for their Series "100 StormSafe" Aluminum Single Hung Window - L.M.I., approved on 04/26/12 and expiring on 05/10/17.

Manuel Perez, P.E.
Product Control Examiner
NOA No. 15-0528.18
Expiration Date: May 10, 2017
Approval Date: December 24, 2015

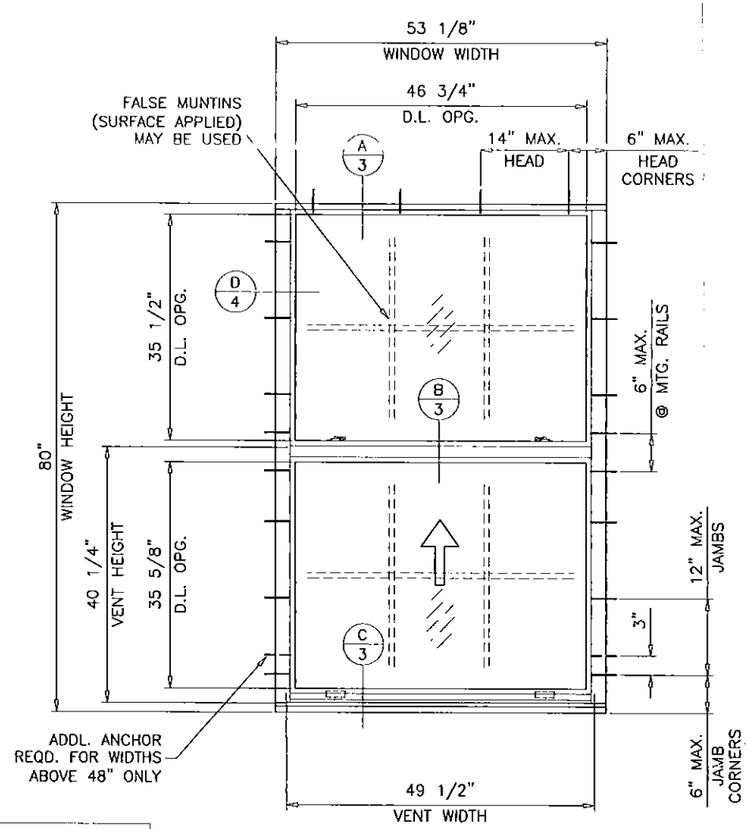

EQUAL LITES

TYPICAL ELEVATION
TESTED UNIT

THESE WINDOWS ARE RATED FOR LARGE & SMALL MISSILE IMPACT. SHUTTERS ARE NOT REQUIRED.

SERIES 100 STORMSAFE ALUMINUM SINGLE HUNG WINDOW

DESIGN LOAD RATINGS FOR THESE WINDOWS TO BE AS PER CHARTS SHOWN ON SHEETS 1 & 2.

APPROVAL APPLIES TO SINGLE UNITS OR SIDE BY SIDE COMBINATIONS OF S.H./S.H. OR SINGLE HUNG WITH OTHER WINDOW TYPES IN MODULES OF TWO OR MORE WINDOWS USING MIAMI-DADE COUNTY APPROVED MULLIONS IN BETWEEN. LOWER DESIGN PRESSURE FROM WINDOWS OR MULLION APPROVAL WILL APPLY TO ENTIRE SYSTEM.

THIS PRODUCT HAS BEEN DESIGNED AND TESTED TO COMPLY WITH THE REQUIREMENTS OF THE 2014 (5TH EDITION) FLORIDA BUILDING CODE INCLUDING HIGH VELOCITY HURRICANE ZONE (HVHZ).

WOOD BUCKS BY OTHERS, MUST BE ANCHORED PROPERLY TO TRANSFER LOADS TO THE STRUCTURE.

ANCHORS SHALL BE AS LISTED, SPACED AS SHOWN ON DETAILS, ANCHORS EMBEDMENT TO BASE MATERIAL SHALL BE BEYOND WALL DRESSING OR STUCCO.

ANCHORING OR LOADING CONDITIONS NOT SHOWN IN THESE DETAILS ARE NOT PART OF THIS APPROVAL.

A LOAD DURATION INCREASE IS USED IN DESIGN OF ANCHORS INTO WOOD ONLY.

ALL SHIMS TO BE HIGH IMPACT, NON-METALLIC AND NON-COMPRESSIBLE.

MATERIALS INCLUDING BUT NOT LIMITED TO STEEL/METAL SCREWS, THAT COME INTO CONTACT WITH OTHER DISSIMILAR MATERIALS SHALL MEET THE REQUIREMENTS OF THE FLORIDA BUILDING CODE.

EQUAL LITES WINDOWS

DESIGN LOAD CAPACITY - PSF

FLANGE DIMS.		GLASS TYPE 'A'		GLASS TYPE 'B'		GLASS TYPE 'C'		GLASS TYPE 'D'		GLASS TYPE 'E'	
WIDTH	HEIGHT	EXT.(+)	INT.(-)	EXT.(+)	INT.(-)	EXT.(+)	INT.(-)	EXT.(+)	INT.(-)	EXT.(+)	INT.(-)
19-1/8"	26" (4)	70.0	70.0	80.0	80.0	80.0	120.0	70.0	70.0	80.0	120.0
26-1/2"		70.0	70.0	80.0	80.0	80.0	120.0	70.0	70.0	80.0	120.0
32"		70.0	70.0	80.0	80.0	80.0	120.0	70.0	70.0	80.0	120.0
37"		70.0	70.0	80.0	80.0	80.0	120.0	70.0	70.0	80.0	120.0
42"		70.0	70.0	80.0	80.0	80.0	120.0	70.0	70.0	80.0	120.0
48"		70.0	70.0	80.0	80.0	80.0	120.0	70.0	70.0	80.0	120.0
53-1/8"		70.0	70.0	80.0	80.0	80.0	120.0	70.0	70.0	80.0	120.0
19-1/8"	38-3/8" (4)	70.0	70.0	80.0	80.0	80.0	120.0	70.0	70.0	80.0	120.0
26-1/2"		70.0	70.0	80.0	80.0	80.0	120.0	70.0	70.0	80.0	120.0
32"		70.0	70.0	80.0	80.0	80.0	120.0	70.0	70.0	80.0	120.0
37"		70.0	70.0	80.0	80.0	80.0	120.0	70.0	70.0	80.0	120.0
42"		70.0	70.0	80.0	80.0	80.0	120.0	70.0	70.0	80.0	120.0
48"		70.0	70.0	80.0	80.0	80.0	120.0	70.0	70.0	80.0	120.0
53-1/8"		70.0	70.0	80.0	80.0	80.0	120.0	70.0	70.0	80.0	120.0
19-1/8"	50-5/8" (6)	70.0	70.0	80.0	80.0	80.0	120.0	70.0	70.0	80.0	120.0
26-1/2"		70.0	70.0	80.0	80.0	80.0	120.0	70.0	70.0	80.0	120.0
32"		70.0	70.0	80.0	80.0	80.0	120.0	70.0	70.0	80.0	120.0
37"		70.0	70.0	80.0	80.0	80.0	120.0	70.0	70.0	80.0	120.0
42"		70.0	70.0	80.0	80.0	80.0	120.0	70.0	70.0	80.0	120.0
48"		70.0	70.0	80.0	80.0	80.0	120.0	70.0	70.0	80.0	120.0
53-1/8"		70.0	70.0	80.0	80.0	80.0	120.0	70.0	70.0	80.0	120.0
19-1/8"	63" (6)	70.0	70.0	80.0	80.0	80.0	120.0	70.0	70.0	80.0	120.0
26-1/2"		70.0	70.0	80.0	80.0	80.0	120.0	70.0	70.0	80.0	120.0
32"		70.0	70.0	80.0	80.0	80.0	120.0	70.0	70.0	80.0	120.0
37"		70.0	70.0	80.0	80.0	80.0	120.0	70.0	70.0	80.0	120.0
42"		70.0	70.0	80.0	80.0	80.0	120.0	70.0	70.0	80.0	120.0
48"		70.0	70.0	80.0	80.0	80.0	120.0	70.0	70.0	80.0	120.0
53-1/8"		70.0	70.0	80.0	80.0	80.0	120.0	70.0	70.0	80.0	120.0
19-1/8"	74-1/4" (8)	70.0	70.0	80.0	80.0	80.0	120.0	70.0	70.0	80.0	120.0
26-1/2"		70.0	70.0	80.0	80.0	80.0	120.0	70.0	70.0	80.0	120.0
32"		70.0	70.0	80.0	80.0	80.0	120.0	70.0	70.0	80.0	120.0
37"		70.0	70.0	80.0	80.0	80.0	120.0	70.0	70.0	80.0	120.0
42"		70.0	70.0	80.0	80.0	80.0	120.0	70.0	70.0	80.0	120.0
48"		–	–	80.0	80.0	80.0	120.0	70.0	70.0	80.0	120.0
53-1/8"		–	–	80.0	80.0	80.0	120.0	70.0	70.0	80.0	120.0
19-1/8"	78" (8)	70.0	70.0	80.0	80.0	80.0	120.0	70.0	70.0	80.0	120.0
26-1/2"		70.0	70.0	80.0	80.0	80.0	120.0	70.0	70.0	80.0	120.0
32"		70.0	70.0	80.0	80.0	80.0	120.0	70.0	70.0	80.0	120.0
37"		70.0	70.0	80.0	80.0	80.0	120.0	70.0	70.0	80.0	120.0
42"		70.0	70.0	80.0	80.0	80.0	120.0	70.0	70.0	80.0	120.0
48"		–	–	80.0	80.0	80.0	120.0	70.0	70.0	80.0	120.0
53-1/8"		–	–	80.0	80.0	80.0	120.0	70.0	70.0	80.0	120.0

SHOWN EXT.(+) LOADS REQUIRE ADD-ON SILL RAMP
REDUCE EXT.(+) LOADS CAPACITY TO +70.0 PSF WITHOUT RAMP.

* NO. IN PARENTHESIS INDICATE NO. OF ANCHORS PER JAMB.

PRODUCT REVISED
as complying with the Florida
Building Code
Acceptance No. 15-0528.18
Expiration Date 05/10/2017
By Manuel Perez
Miami-Dade Product Control

NOTE:
GLASS CAPACITIES ON THIS SHEET ARE BASED ON ASTM E1300-09 (3 SEC. GUSTS) AND FLORIDA BUILDING COMMISSION DECLARATORY STATEMENT DCA05-DEC-219

Engr: JAVAD AHMAD
CIVIL
FLA. PE # 70592
C.A.N. 3538

DEC 1 0 2015

AL-FAROOQ CORPORATION
ENGINEERS & PRODUCT DEVELOPMENT
9360 SUNSET DRIVE, SUITE 220
MIAMI, FLORIDA 33173
TEL. (305) 264-8100 FAX. (305) 262-6978

COMP-ANL\W07-07SIW

S-100 STORMSAFE ALUM SINGLE HUNG WDW. (L.M.I.)

SIW IMPACT WINDOWS, LLC.
975 S. CONGRESS AVE. #102
DELRAY BEACH, FL. 33445
TEL. (561) 274-9392 FAX. (561) 274-9262

revisions:

no	date	by	description
A	07.27.09		UPDATED FOR 2007 FBC
B	01.12.12	-	UPDATED TO 2010 FBC
C	05.20.15		UPDATED TO 2014 FBC
D	12.04.15		REV. PER RER COMMENTS

date: 01-29-07
scale: 1/2"=1'-0"
dr. by: HAMID
chk. by:

drawing no.
W07-07

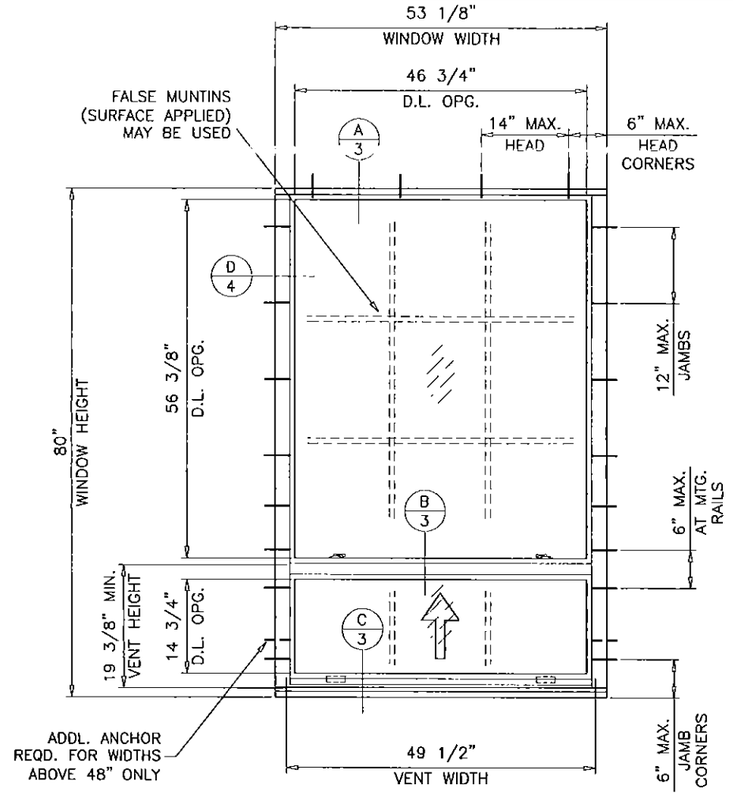

UNEQUAL LITES (ORIEL TYPE)

TYPICAL ELEVATION
TESTED UNIT

UNEQUAL LITES WINDOWS											
DESIGN LOAD CAPACITY – PSF											
FLANGE DIMS.		GLASS TYPE 'A'		GLASS TYPE 'B'		GLASS TYPE 'C'		GLASS TYPE 'D'		GLASS TYPE 'E'	
WIDTH	HEIGHT	EXT.(+)	INT.(–)	EXT.(+)	INT.(–)	EXT.(+)	INT.(–)	EXT.(+)	INT.(–)	EXT.(+)	INT.(–)
19-1/8"	50-5/8" (5)	70.0	70.0	80.0	80.0	80.0	120.0	70.0	70.0	80.0	120.0
26-1/2"		70.0	70.0	80.0	80.0	80.0	120.0	70.0	70.0	80.0	120.0
32"		70.0	70.0	80.0	80.0	80.0	120.0	70.0	70.0	80.0	120.0
37"		70.0	70.0	80.0	80.0	80.0	120.0	70.0	70.0	80.0	120.0
42"		70.0	70.0	80.0	80.0	80.0	120.0	70.0	70.0	80.0	120.0
48"		70.0	70.0	80.0	80.0	80.0	120.0	70.0	70.0	80.0	120.0
53-1/8"		70.0	70.0	80.0	80.0	80.0	120.0	70.0	70.0	80.0	120.0
19-1/8"	63" (6)	70.0	70.0	80.0	80.0	80.0	120.0	70.0	70.0	80.0	120.0
26-1/2"		70.0	70.0	80.0	80.0	80.0	120.0	70.0	70.0	80.0	120.0
32"		70.0	70.0	80.0	80.0	80.0	120.0	70.0	70.0	80.0	120.0
37"		70.0	70.0	80.0	80.0	80.0	120.0	70.0	70.0	80.0	120.0
42"		–	–	80.0	80.0	80.0	120.0	70.0	70.0	80.0	120.0
48"		–	–	80.0	80.0	80.0	120.0	70.0	70.0	80.0	120.0
53-1/8"		–	–	60.0	60.0	80.0	120.0	70.0	70.0	–	–
19-1/8"	74-1/4" (8)	70.0	70.0	80.0	80.0	80.0	120.0	70.0	70.0	80.0	120.0
26-1/2"		70.0	70.0	80.0	80.0	80.0	120.0	70.0	70.0	80.0	120.0
32"		–	–	80.0	80.0	80.0	120.0	70.0	70.0	80.0	120.0
37"		–	–	80.0	80.0	80.0	120.0	70.0	70.0	80.0	120.0
42"		–	–	60.0	60.0	80.0	120.0	70.0	70.0	–	–
48"		–	–	60.0	60.0	80.0	120.0	70.0	70.0	–	–
53-1/8"		–	–	60.0	60.0	80.0	120.0	70.0	70.0	–	–
19-1/8"	78" (8)	70.0	70.0	80.0	80.0	80.0	120.0	70.0	70.0	80.0	120.0
26-1/2"		70.0	70.0	80.0	80.0	80.0	120.0	70.0	70.0	80.0	120.0
32"		–	–	60.0	60.0	80.0	120.0	70.0	70.0	80.0	120.0
37"		–	–	60.0	60.0	80.0	120.0	70.0	70.0	–	–
42"		–	–	60.0	60.0	80.0	120.0	70.0	70.0	–	–
48"		–	–	60.0	60.0	80.0	120.0	70.0	70.0	–	–
53-1/8"		–	–	60.0	60.0	80.0	120.0	70.0	70.0	–	–
SHOWN EXT.(+) LOADS REQUIRE ADD-ON SILL RAMP REDUCE EXT.(+) LOADS CAPACITY TO +70.0 PSF WITHOUT RAMP.											

* NO. IN PARENTHESIS INDICATE NO. OF ANCHORS PER JAMB.

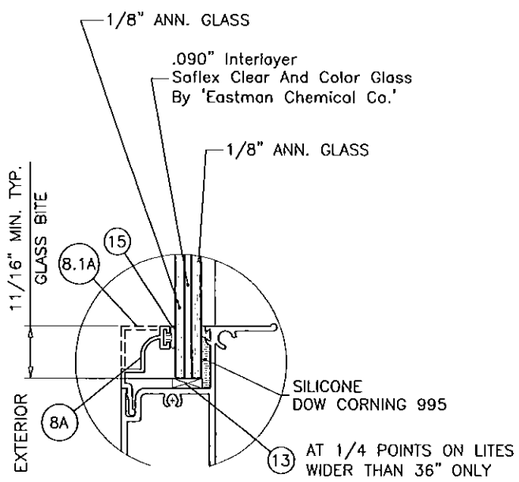

GLASS TYPE 'A'

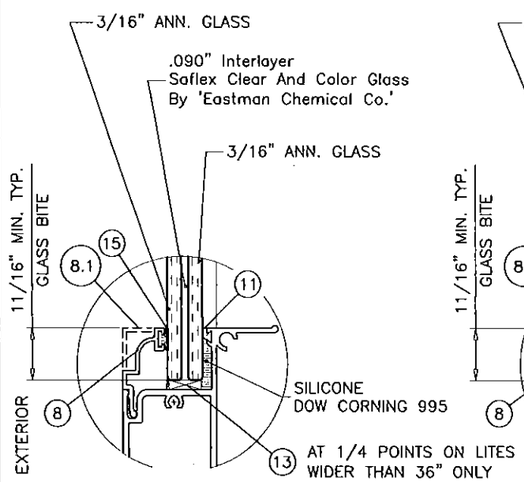

GLASS TYPE 'B'

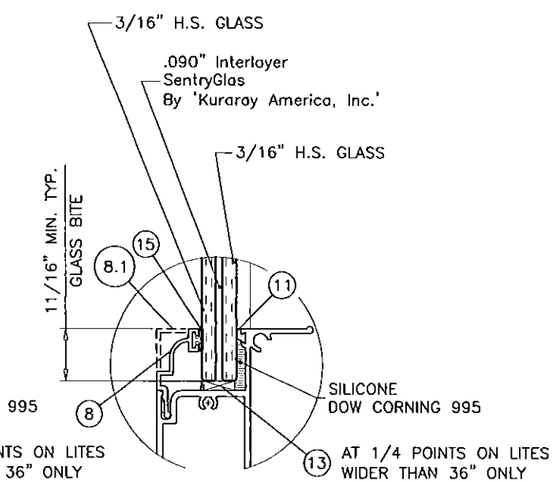

GLASS TYPE 'C'

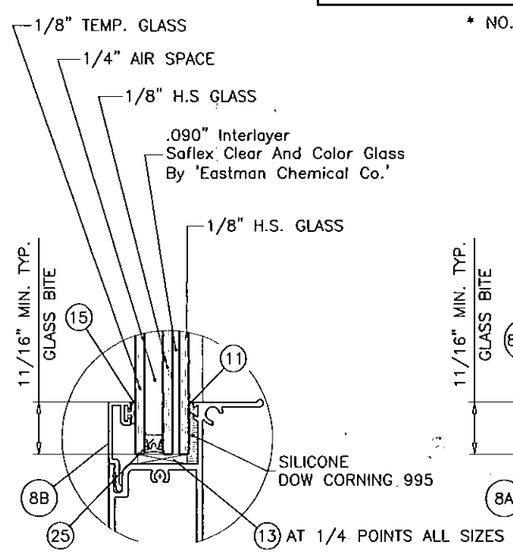

GLASS TYPE 'D'

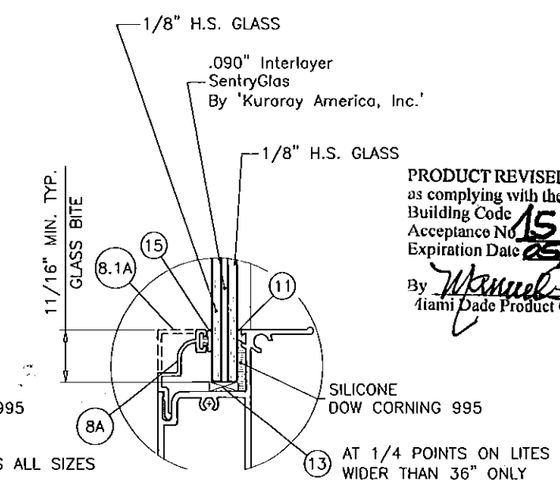

GLASS TYPE 'E'

GLAZING OPTIONS

PRODUCT REVISED
as complying with the Florida
Building Code
Acceptance No 15-0528.18
Expiration Date 05/10/2017
By
Miami Dade Product Control

Engr: JAVAD AHMAD
CIVIL
FLA. PE # 70592
C.A.N. 3538

DEC 1 0 2015

AL-FAROOQ CORPORATION
ENGINEERS & PRODUCT DEVELOPMENT
9360 SUNSET DRIVE, SUITE 220
MIAMI, FLORIDA 33173
TEL. (305) 264-8100 FAX. (305) 262-6978

COMP-ANL\W07-07SIW

S-100 STORMSAFE ALUM SINGLE HUNG WDW. (L.M.I.)

SIW IMPACT WINDOWS, LLC.
975 S. CONGRESS AVE. #102
DELRAY BEACH, FL. 33445
TEL. (561) 274-9392 FAX. (561) 274-9262

revisions:

no	date	by	description
A	07.27.09		UPDATED FOR 2007 FBC
B	01.12.12		NO CHANGE THIS SHEET
C	05.20.15		UPDATED TO 2014 FBC
D	12.04.15		REV. PER RER COMMENTS

date: 01-29-07
scale: 1/2" = 1"
dr. by: HAMID
chk. by:

drawing no.
W07-07

sheet 2 of 5

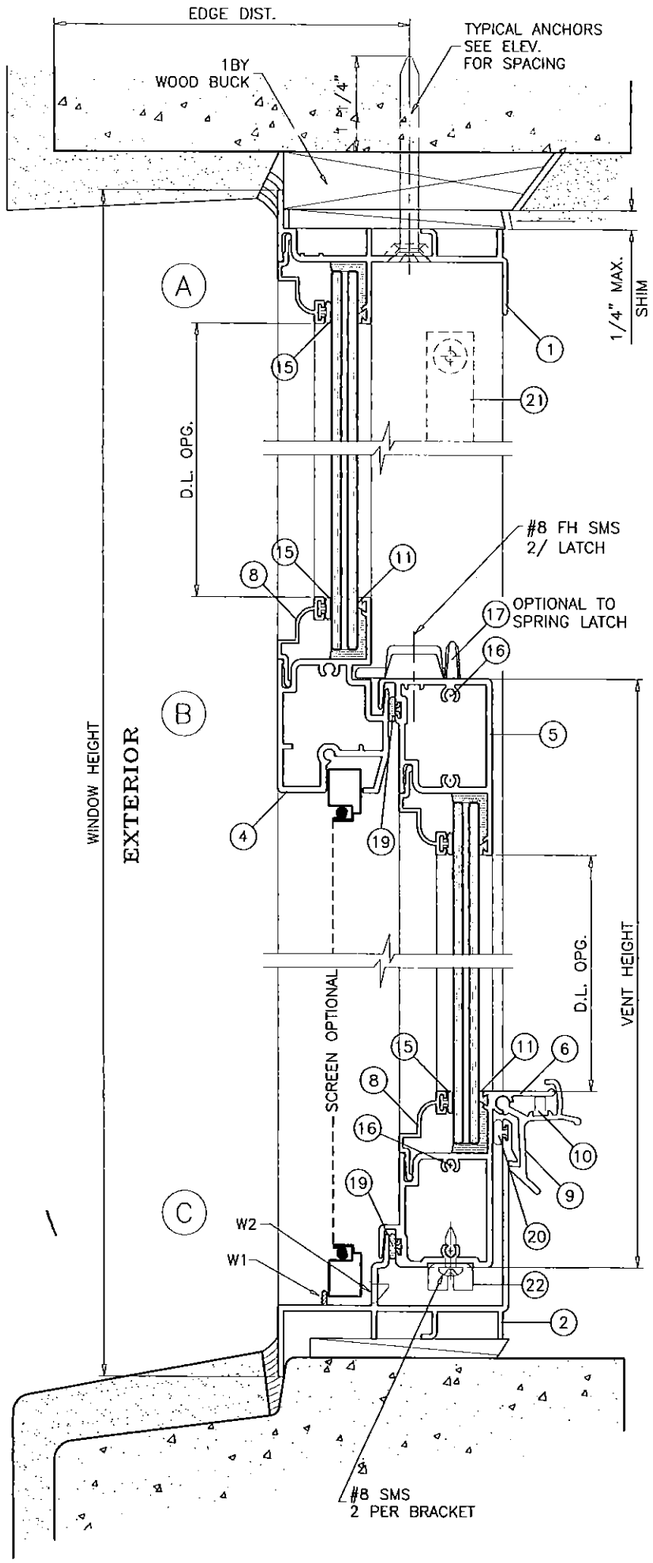

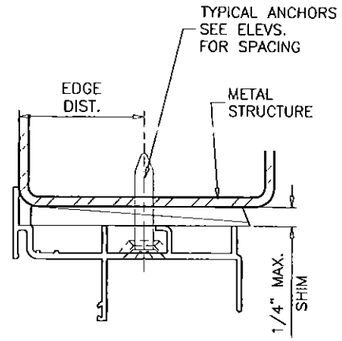

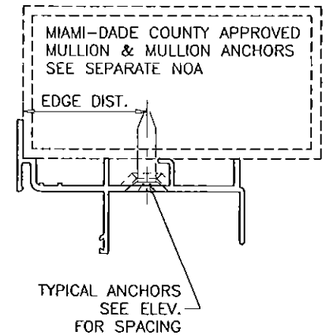

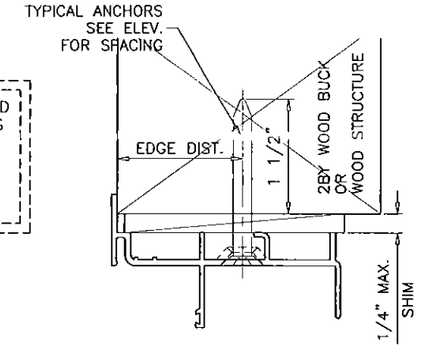

WOOD BUCKS AND METAL STRUCTURE NOT BY S.I.W. MUST SUSTAIN LOADS IMPOSED BY GLAZING SYSTEM AND TRANSFER THEM TO THE BUILDING STRUCTURE.

SEALANTS:

ALL JOINTS AND FRAME CONNECTIONS SEALED WITH SILICONE OR ACRYLIC SEALANT.

WEEPHOLES:

W1 = 1/2" LONG NOTCH AT EACH END AT 3" FROM EACH END

W2 = 1/4" WEEP HOLE WITH PLASTIC BAFFLE AT 8-1/4" FROM EACH END AND AT CENTER

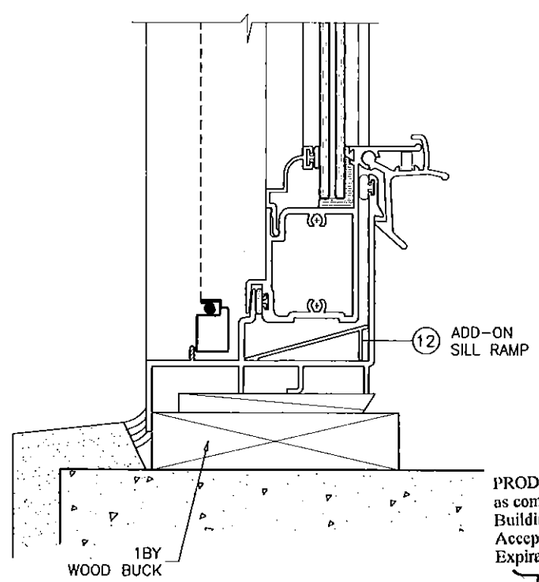

TYPICAL ANCHORS: SEE ELEV. FOR SPACING

1/4" DIA. ULTRACON BY 'ELCO' (Fu=177 KSI, Fy=155 KSI)

INTO 2BY WOOD BUCKS OR WOOD STRUCTURES
1-1/2" MIN. PENETRATION INTO WOOD (HEAD/JAMBS)

THRU 1BY BUCKS INTO CONC. OR MASONRY
1-1/4" MIN. EMBED INTO CONCRETE (HEAD)
1-1/4" MIN. EMBED INTO CONC. OR MASONRY (JAMBS)

DIRECTLY INTO CONC. OR MASONRY
1-1/4" MIN. EMBED INTO CONCRETE (HEAD)
1-1/4" MIN. EMBED INTO CONC. OR MASONRY (JAMBS)

#14 SMS OR SELF DRILLING SCREWS (GRADE 2 CRS)

INTO METAL STRUCTURES
STEEL : 1/8" THK. MIN. (Fy = 36 KSI MIN.)
ALUMINUM : 1/8" THK. MIN. (6063-T5 MIN.)
(STEEL IN CONTACT WITH ALUMINUM TO BE PLATED OR PAINTED)

#12 SMS OR SELF DRILLING SCREWS (GRADE 2 CRS)

INTO MIAMI-DADE COUNTY APPROVED MULLIONS (MIN. THK. = 1/8")
(NO SHIM SPACE)

TYPICAL EDGE DISTANCE

INTO CONCRETE AND MASONRY = 2-1/2" MIN.
INTO WOOD STRUCTURE = 1" MIN.
INTO METAL STRUCTURE = 3/4" MIN.

WOOD AT HEAD, SILL OR JAMBS SG = 0.55 MIN.
CONCRETE AT HEAD, SILL OR JAMBS f'c = 3000 PSI MIN.
NORMAL WEIGHT CMU PER ASTM C-90 AT JAMBS f'm = 2000 PSI MIN.

PRODUCT REVISED
as complying with the Florida
Building Code
Acceptance No 15-0528.18
Expiration Date 05/10/2017
By Manuel Perez
Miami-Dade Product Control

Engr: JAVAD AHMAD
CIVIL
FLA. PE # 70592
C.A.N. 3538
DEC 1 0 2015

AL-FAROOQ CORPORATION
ENGINEERS & PRODUCT DEVELOPMENT
9360 SUNSET DRIVE, SUITE 220
MIAMI, FLORIDA 33173
TEL. (305) 264-8100 FAX. (305) 262-6978

COMP-ANL\W07-07SIW

S-100 STORMSAFE ALUM. SINGLE HUNG WDW. (L.M.I.)

SIW IMPACT WINDOWS, LLC.
975 S. CONGRESS AVE. #102
DELRAY BEACH, FL. 33445
TEL. (561) 274-9392 FAX. (561) 274-9262

revisions:

no	date	by	description
A	07.27.09		UPDATED FOR 2007 FBC
B	01.12.12		NO CHANGE THIS SHEET
C	05.20.15		UPDATED TO 2014 FBC
D	12.04.15		REV. PER RER COMMENTS

date: 01-29-07
scale: 1/2" = 1"
dr. by: HAMID
chk. by:

drawing no.
W07-07

sheet 3 of 5

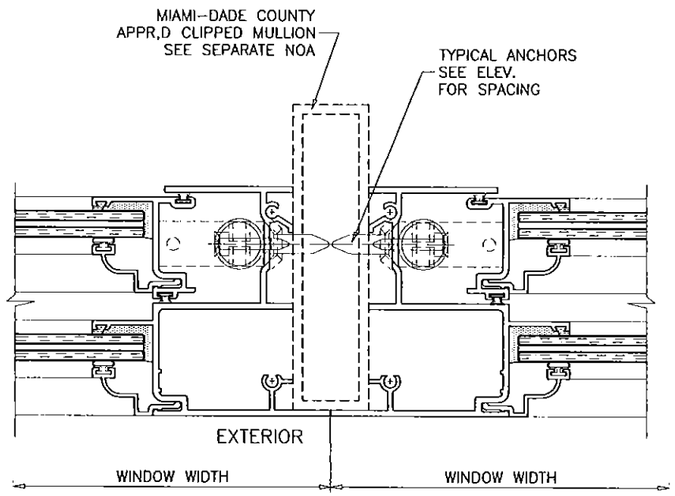

ITEM #	PART #	REQD.	DESCRIPTION	MATERIAL	MANF./SUPPLIER/REMARKS
1	SIW101	1	FRAME HEAD	6063-T6	–
2	SIW102	1	FRAME SILL	6063-T6	–
3	SIW103	2	FRAME JAMB	6063-T6	–
4	SIW104	1	FIXED MTG. RAIL	6063-T6	–
5	SIW105	1	VENT TOP RAIL	6063-T6	–
6	SIW106	1	VENT BOTTOM RAIL	6063-T6	–
7	SIW107	2	VENT SIDE RAIL	6063-T6	–
8	SIW108	AS RQD.	GLAZING BEAD (7/16" GLASS)	6063-T6	–
8.1	SIW127	AS RQD.	ALT. GLAZING BEAD (7/16" GLASS)	6063-T6	–
8A	SIW112	AS RQD.	GLAZING BEAD (3/8" GLASS)	6063-T6	–
8.1A	SIW128	AS RQD.	ALT. GLAZING BEAD (3/8" GLASS)	6063-T6	–
8B	SIW117	AS RQD.	GLAZING BEAD (LAM. INSUL. GLASS)	6063-T6	–
9	SIW109	2/VENT	VENT LATCH @ 9-3/4" FROM ENDS	6063-T6	–
10	–	1/LATCH	LATCH SPRING	ST. STEEL	–
11	SIW113	AS REQD.	GLAZING LEG SPACER	SANTOPRENE	–
12	SIW124	1	SILL RAMP	6063-T5	–
13	–	AS REQD.	SETTING BLOCKS	EPDM	DUROMETER 80±5 SHORE A
14	–	4/ VENT	VENT GUIDE	NYLON	–
15	E20218KN4020	AS REQD.	GLAZING BULB VINYL	NEOPRENE	ULTRAFAB
16	#10 X 1-1/2"	20	FRAME & VENT ASSEMBLY SCREWS	CRS	PH SMS
17	–	2/VENT	SWEEP LATCH (OPTIONAL)	ZAMAK	BUILDERS HARDWARE
18	W23201NG0000	AS REQD.	VENT W'STRIPPING @ EXTERIOR (.187"W X .200"H)	–	ULTRAFAB OR EQUIV.
18A	W33321NG0000	AS REQD.	VENT W'STRIPPING @ INTERIOR (.187"W X .320"H)	–	ULTRAFAB OR EQUIV.
19	CIB301NW	AS REQD.	BULB W'STRIPPING @ VENT HORIZ.(.187"W X .300"H)	–	CENTRAL PLASTICS
20	938BL	AS REQD.	FRAME SILL W'STRIPPING (.18"W X .325"H)	POLYPROPYLENE	CENTRAL PLASTICS
21	–	2/VENT	SPIRAL BALANCE		UNIQUE BALANCE
22	–	1/ BAL.	ULTRALIFT BRACKET	STEEL	–
23	–	2	SASH STOP	–	NOT SHOWN
24	–	1	7/16" BOX SCREEN	–	OPTIONAL
25	–	AS REQD.	INSULATED GLASS EDGE SPACER	ST. STEEL	CARDINAL XL

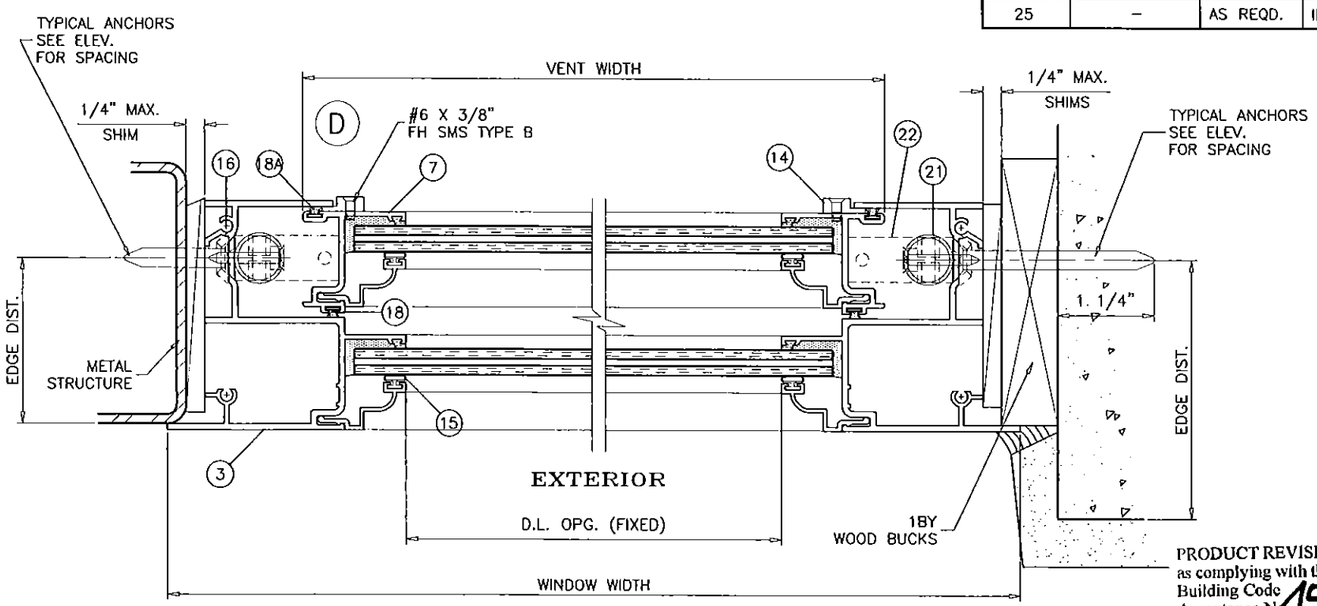

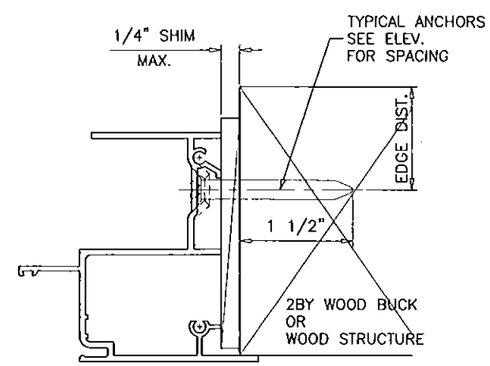

PRODUCT REVISED
as complying with the Florida
Building Code
Acceptance No 15-0528.18
Expiration Date 05/10/2017
By Manuel Perez
Miami-Dade Product Control

Engr: JAVAD AHMAD
CIVIL
FLA. PE # 70592
C.A.N. 3538

DEC 10 2015

AL-FAROOQ CORPORATION
ENGINEERS & PRODUCT DEVELOPMENT
9360 SUNSET DRIVE, SUITE 220
MIAMI, FLORIDA 33173
TEL. (305) 264-8100 FAX. (305) 262-6978

COMP-ANL\W07-07SIW

S-100 STORMSAFE ALUM SINGLE HUNG WDW. (L.M.I.)

SIW IMPACT WINDOWS, LLC.
975 S. CONGRESS AVE. #102
DELRAY BEACH, FL. 33445
TEL. (561) 274-9392 FAX. (561) 274-9262

revisions:

no	date	by	description
A	07.27.09		UPDATED FOR 2007 FBC
B	01.12.12		NO CHANGE THIS SHEET
C	05.20.15		UPDATED TO 2014 FBC
D	12.04.15		REV. PER RER COMMENTS

date: 01-29-07
scale: 1/2" = 1"
dr. by: HAMID
chk. by:

drawing no.
W07-07

sheet 4 of 5

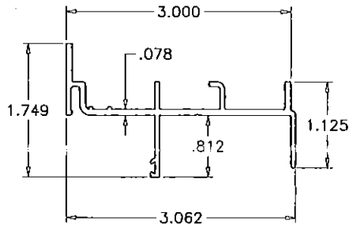

(1) FRAME HEAD

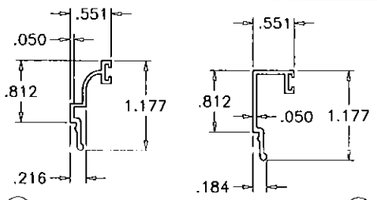

(8) (8.1) GLAZING BEADS (7/16" GLASS)

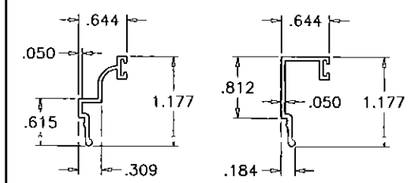

(8A) (8.1A) GLAZING BEADS (3/8" GLASS)

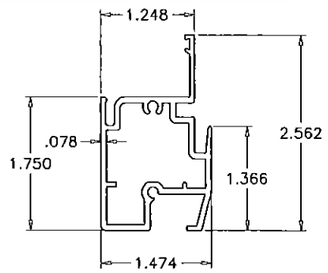

(4) MEETING RAIL

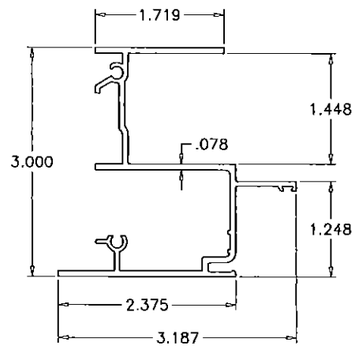

(3) FRAME JAMB

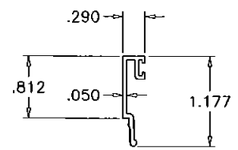

(8B) GLAZING BEAD (LAM. INSUL. GLASS)

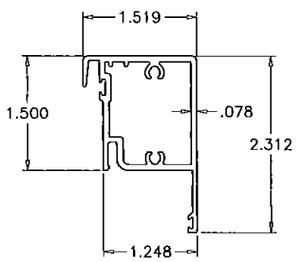

(5) VENT TOP RAIL

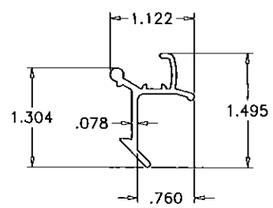

(9) VENT LATCH

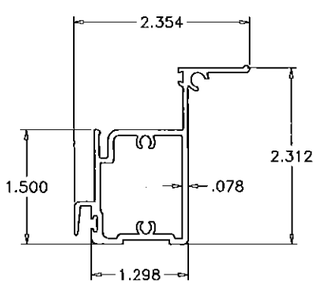

(6) VENT BOTTOM RAIL

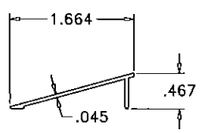

(12) SILL RAMP

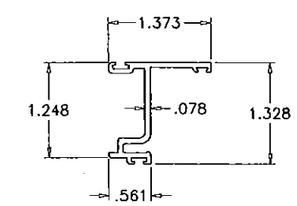

(7) VENT SIDE RAIL

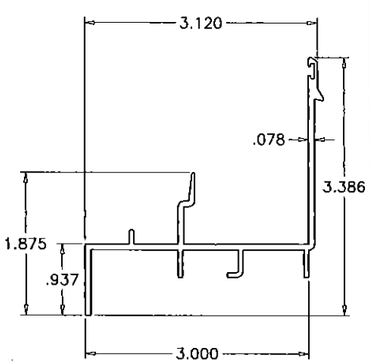

(2) FRAME SILL

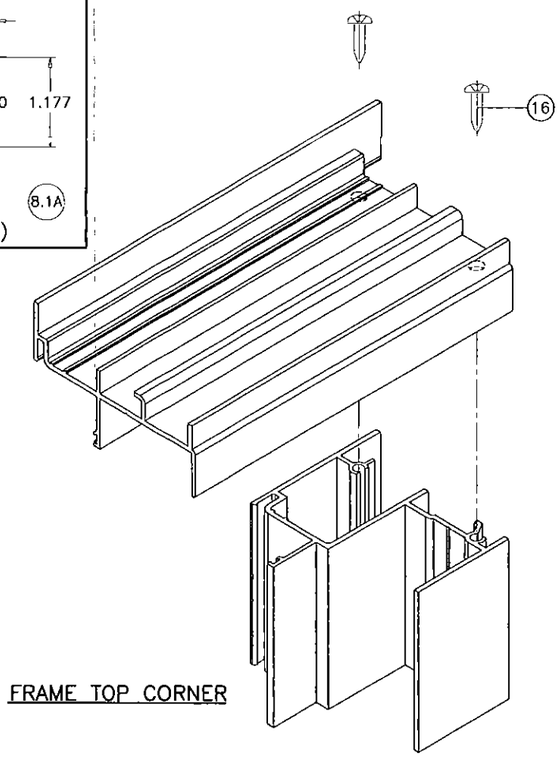

FRAME TOP CORNER

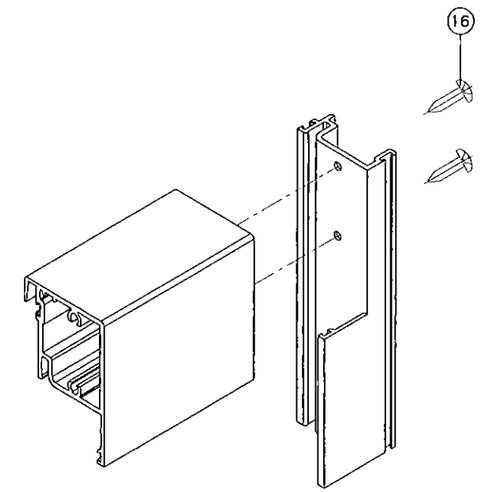

VENT TOP CORNER

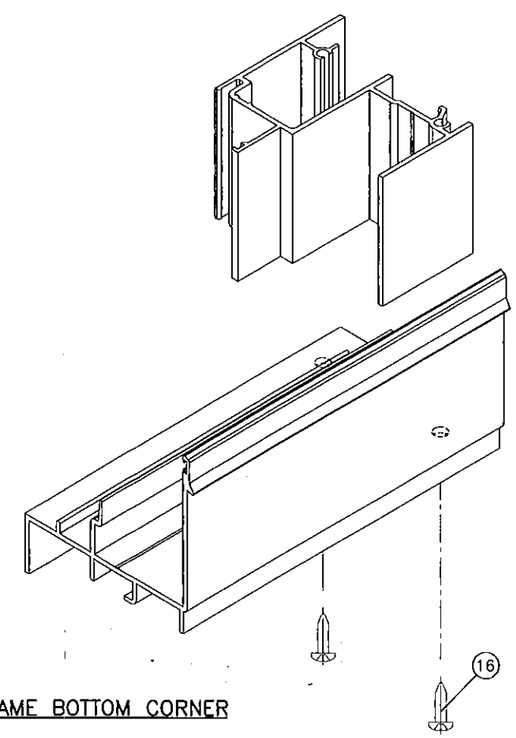

FRAME BOTTOM CORNER

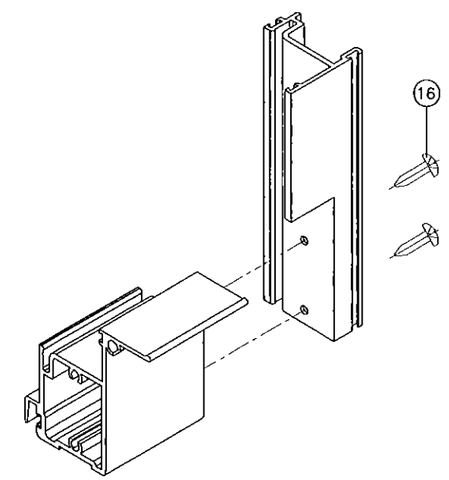

VENT BOTTOM CORNER

Engr: JAVAD AHMAD
CIVIL
FLA. PE # 70592
C.A.N. 3538

DEC 10 2015

PRODUCT REVISED
as complying with the Florida
Building Code
Acceptance No 15-0528.18
Expiration Date 05/10/2017
By Manuel Perez
Miami Dade Product Control

AL-FAROOQ CORPORATION
ENGINEERS & PRODUCT DEVELOPMENT
9360 SUNSET DRIVE, SUITE 220
MIAMI, FLORIDA 33173
TEL. (305) 264-8100 FAX. (305) 262-6978

COMP-ANL\W07-07SIW

S-100 STORMSAFE ALUM SINGLE HUNG WDW. (L.M.I.)

SIW IMPACT WINDOWS, LLC.
975 S. CONGRESS AVE. #102
DELRAY BEACH, FL. 33445
TEL. (561) 274-9392 FAX. (561) 274-9262

revisions:

no	date	by	description
A	07.27.09		UPDATED FOR 2007 FBC
B	01.12.12		NO CHANGE THIS SHEET
C	05.20.15		UPDATED TO 2014 FBC
D	12.04.15		NO CHANGE THIS SHEET

date: 01-29-07
scale: 1/2" = 1"
dr. by: HAMID
chk. by:

drawing no.
W07-07

sheet 5 of 5