MIAMI-DADE COUNTY
PRODUCT CONTROL SECTION
11805 SW 26 Street, Room 208
Miami, Florida 33175-2474
T (786) 315-2590 F (786) 315-2599
www.miamidade.gov/economy

DEPARTMENT OF REGULATORY AND ECONOMIC RESOURCES (RER)
BOARD AND CODE ADMINISTRATION DIVISION

NOTICE OF ACCEPTANCE (NOA)

PGT Industries, Inc.
1070 Technology Drive
North Venice, FL 34275

SCOPE:

This NOA is being issued under the applicable rules and regulations governing the use of construction materials. The documentation submitted has been reviewed and accepted by Miami-Dade County RER -Product Control Section to be used in Miami Dade County and other areas where allowed by the Authority Having Jurisdiction (AHJ).

This NOA shall not be valid after the expiration date stated below. The Miami-Dade County Product Control Section (In Miami Dade County) and/or the AHJ (in areas other than Miami Dade County) reserve the right to have this product or material tested for quality assurance purposes. If this product or material fails to perform in the accepted manner, the manufacturer will incur the expense of such testing and the AHJ may immediately revoke, modify, or suspend the use of such product or material within their jurisdiction. RER reserves the right to revoke this acceptance, if it is determined by Miami-Dade County Product Control Section that this product or material fails to meet the requirements of the applicable building code.

This product is approved as described herein, and has been designed to comply with the Florida Building Code, including the High Velocity Hurricane Zone.

DESCRIPTION: Series **"FD-101"** Aluminum French Doors w/wo Sidelites– **L.M.I.**

APPROVAL DOCUMENT: Drawing No. **11005–1 Rev E**, titled "Alum. French Door & Sidelites, Impact", sheets 1 through 10 of 10, dated 04/04/2012 and last revised on 05/29215, prepared by PGT Industries, signed and sealed by Anthony Lynn Miller, P. E., bearing the Miami–Dade County Product Control Revision stamp with the Notice of Acceptance number and Expiration date by the Miami–Dade County Product Control Section.

MISSILE IMPACT RATING: Large and Small Missile Impact Resistant

Limitations:

1. Use of Table 1, require full length reinforcements (item #22) for OX, XO, XXO, OXX, OXO and OXXO. The lower design pressure from X, XX door or O (sidelite) shall control.
2. All laminated glazing options (glass types, A, B, C, D & E) must have 3/16"HS glass at interior side.
3. ¼" Elco Ultracon (former Tapcon) to be 4"OC into Conc. and 6" into CMU (jambs).
4. Unlisted missing items # 68, 69, 75-89 and 100-102 in Bill of Material are not part of approvals
5. Applicable Egress requirement to be reviewed by Building official.

LABELING: Each unit shall bear a permanent label with the manufacturer's name or logo, city, state and series and following statement: "Miami-Dade County Product Control Approved", noted herein.

RENEWAL of this NOA shall be considered after a renewal application has been filed and there has been no change in the applicable building code negatively affecting the performance of this product.

TERMINATION of this NOA will occur after the expiration date or if there has been a revision or change in the materials, use, and/or manufacture of the product or process. Misuse of this NOA as an endorsement of any product, for sales, advertising or any other purposes shall automatically terminate this NOA. Failure to comply with any section of this NOA shall be cause for termination and removal of NOA.

ADVERTISEMENT: The NOA number preceded by the words Miami-Dade County, Florida, and followed by the expiration date may be displayed in advertising literature. If any portion of the NOA is displayed, then it shall be done in its entirety.

INSPECTION: A copy of this entire NOA shall be provided to the user by the manufacturer or its distributors and shall be available for inspection at the job site at the request of the Building Official.

This NOA **revises NOA # 12-0516.02** and consists of this page 1 and evidence pages E-1, as well as approval document mentioned above.

The submitted documentation was reviewed by **Ishaq I. Chanda, P.E.**

MIAMI-DADE COUNTY APPROVED

7/13/15

NOTICE OF ACCEPTANCE: EVIDENCE SUBMITTED

A. DRAWINGS

1. Manufacturer's die drawings and sections (Submitted under files # listed below)
2. Drawing No. **11005–1 Rev E**, titled "Alum. French Door & Sidelites, Impact", sheets 1 through 10 of 10, dated 04/04/2012 and last revised on 05/29215, prepared by PGT Industries, signed and sealed by Anthony Lynn Miller, P.E.

B. TESTS (Submitted under files # **12-0516.02/#11-1013.22**)

1. Test reports on: 1) Uniform Static Air Pressure Test, Loading per FBC TAS 202-94
   2) Large Missile Impact Test per FBC, TAS 201-94
   3) Cyclic Wind Pressure Loading per FBC, TAS 203-94

Along with marked–up drawings and installation diagram of fixed sidelite (O) w/ insulated laminated glass, prepared by Fenestration Testing Laboratory, Inc., Test Reports No(s) **FTL–6864**, dated 04/02/12, signed and sealed by Marlin D. Brinson, P. E.

2) Test report on 1) Air Infiltration Test, per FBC, TAS 202-94
   2) Uniform Static Air Pressure Test, Loading per FBC TAS 202-94
   3) Water Resistance Test, per FBC, TAS 202-94
   4) Large Missile Impact Test per FBC, TAS 201-94
   5) Cyclic Wind Pressure Loading per FBC, TAS 203-94
   6) Forced Entry Test, per FBC 2411 3.2.1, TAS 202-94

Along with marked–up drawings and installation diagram of Aluminum outswing doors w/sidelites, prepared by Fenestration Testing Laboratory, Inc., Test Reports No **FTL–5212**, dated 05/05/2007, signed and sealed by Carlos S. Rionda, P. E

C. CALCULATIONS

1. Anchor verification calculations and structural analysis dated 05/22/15, complying with FBC-214 (**5th** Edition), prepared by PGT, signed and sealed by Lynn Miller, P.E.
2. Glazing complies w/ ASTME-1300-02, 04 & -09.

D. QUALITY ASSURANCE

1. Miami Dade Department of Regulatory and Economic Resources (RER).

E. MATERIAL CERTIFICATIONS

1. Notice of Acceptance No. **11–0624.01** issued to E.I. DuPont DeNemours & Co., Inc. for their "**DuPont Butacite® PVB Interlayer**", expiring on 12/11/2016.
2. Notice of Acceptance No. **11–0325.05** issued to Solutia Inc. for their "**Saflex (clear & color) interlayer**", expiring on 05/21/16.

F. STATEMENTS

1. Statement letter of conformance to FBC 2014(5th edition) and letter of no financial interest, prepared by PGT, dated 05/22/15, signed and sealed by Lynn Miller, P.E.
2. Lab compliance as part of the above referenced test report.

G. OTHER

1. This NOA **revises** NOA # **12-0516.042**, expiring 10/18/17.
2. Test proposals dated Jan 18, 2017 and 02/15/12 approved by Jaime D. Gascon, P.E.

Ishaq I. Chanda

Ishaq I. Chanda, P.E.
Product Control Examiner
NOA No. 15-0528.24
Expiration Date: October 18, 2017
Approval Date: July 23, 2015

NOTES: OUTSWING IMPACT FRENCH DOOR(S) AND SIDE LITE(S)

1. GLAZING OPTIONS:
   A. 3/8" LAMI NOM. (.402") CONSISTING OF (1) LITE OF 1/8" ANNEALED GLASS PLUS AN .090 PVB INTERLAYER OF DUPONT BUTACITE OR SAFLEX/KEEPSAFE MAXIMUM PLUS (1) LITE OF 3/16" HEAT STRENGTHENED GLASS.
   B. 3/8" LAMI NOM. (.402") CONSISTING OF (1) LITE OF 1/8" HEAT STRENGTHENED GLASS PLUS AN .090 PVB INTERLAYER OF DUPONT BUTACITE OR SAFLEX/KEEPSAFE MAXIMUM PLUS (1) LITE OF 3/16" HEAT STRENGTHENED GLASS.
   C. 7/16" LAMI NOM. (.465") CONSISTING OF (1) LITE OF 3/16" ANNEALED GLASS PLUS AN .090 PVB INTERLAYER OF DUPONT BUTACITE OR SAFLEX/KEEPSAFE MAXIMUM PLUS (1) LITE OF 3/16" HEAT STRENGTHENED GLASS.
   D. 7/16" LAMI NOM. (.465") CONSISTING OF (1) LITE OF 3/16" HEAT STRENGTHENED GLASS PLUS AN .090 PVB INTERLAYER OF DUPONT BUTACITE OR SAFLEX/KEEPSAFE MAXIMUM PLUS (1) LITE OF 3/16" HEAT STRENGTHENED GLASS.
   E. 13/16" LAMI IG NOM. (.840") CONSISTING OF (1) LITE OF 3/16" TEMPERED GLASS, 1/4" AIRSPACE, (1) LITE OF 1/8" HEAT STRENGTHENED GLASS PLUS AN .090 PVB INTERLAYER OF DUPONT BUTACITE PLUS (1) LITE OF 3/16" HEAT STRENGTHENED GLASS.
2. DESIGN PRESSURES: SEE TABLES 1 AND 2 ON SHEET 2.
   A. NEGATIVE DESIGN LOADS BASED ON TESTED PRESSURE AND GLASS TABLES ASTM E 1300.
   E B. POSITIVE DESIGN LOADS BASED ON WATER TEST PRESSURE AND GLASS TABLES ASTM E 1300.
3. CONFIGURATIONS: X, O, XX, XO, OX, XXO, OXX, OXO, AND OXXO.
4. ANCHORAGE: THE 33 1/3% STRESS INCREASE HAS NOT BEEN USED IN THE DESIGN OF THIS PRODUCT. MATERIALS, INCLUDING BUT NOT LIMITED TO STEEL SCREWS, THAT COME INTO CONTACT WITH OTHER DISSIMILAR MATERIALS, SHALL MEET THE REQUIREMENTS OF THE FLORIDA BUILDING CODE. FOR ANCHORAGE REQUIREMENTS SEE SHEETS 8 THROUGH 10.
5. SHUTTERS ARE NOT REQUIRED.
6. SEALANT: INSTALLATION SCREWS, FRAME AND PANEL CORNERS SEALED WITH CLEAR COLORED SEALANT.
7. REFERENCES:
   E TEST REPORTS FTL-4964, 5212 & 6864; ELCO ULTRACON NOA'S:; ANSI/AF&PA NDS FOR WOOD CONSTRUCTION AND ALUMINUM DESIGN MANUAL.
8. THIS PRODUCT HAS BEEN DESIGNED & TESTED TO COMPLY WITH THE REQUIREMENTS OF THE FLORIDA BUILDING CODE, INCLUDING THE HIGH VELOCITY HURRICANE ZONE (HVHZ).
9. CONFIGURATIONS WHICH CONTAIN A SIDE LITE TO DOOR CONNECTION:
   A. THE LOWER DESIGN PRESSURE FROM TABLE 1. OR 2. PREVAILS.
   B. FULL LENGTH REINFORCEMENT (ITEM 22 SHOWN IN SECTION E-E, SHEET 5), IS REQUIRED ONLY AT ALL DOOR TO SIDE LITE CONNECTIONS FROM TABLE 1., SHT. 2. REFER TO TABLE 2, SHT. 2 FOR DOOR TO SIDE LITE CONNECTIONS WHICH DO NOT REQUIRE ITEM 22 REINFORCEMENT.

NOA DRAWING MAP

TOPIC	SHEET
GENERAL NOTES	1
CONFIGURATIONS	1
GLAZING DETAILS	1
DESIGN PRESSURES	2
ELEVATIONS	3
VERT. SECTIONS	4
HORIZ. SECTIONS	5
PARTS LIST	6
EXTRUSIONS	6, 7
ANCHORAGE	8-10

GLASS ABBREVIATIONS
AN. = ANNEALED
HS. = HEAT-STRENGTHENED
TP. = TEMPERED

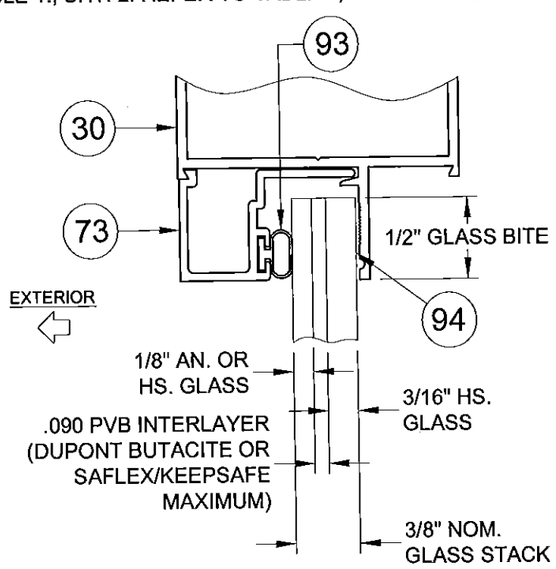

3/8" LAMI NOM.
GLAZING OPTION A OR B, NOTE 1

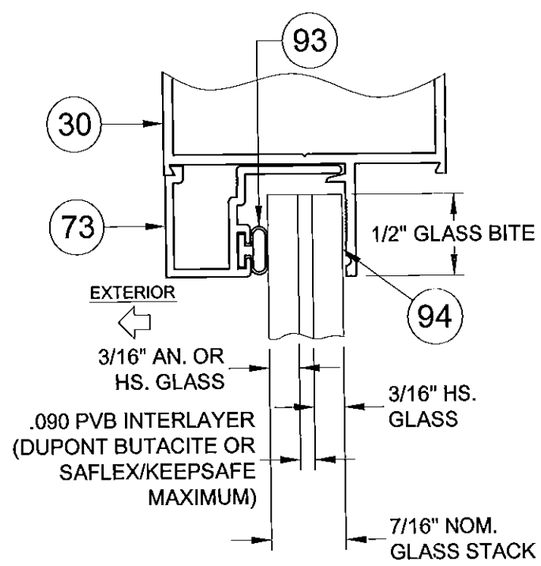

7/16" LAMI NOM.
GLAZING OPTION C OR D, NOTE 1

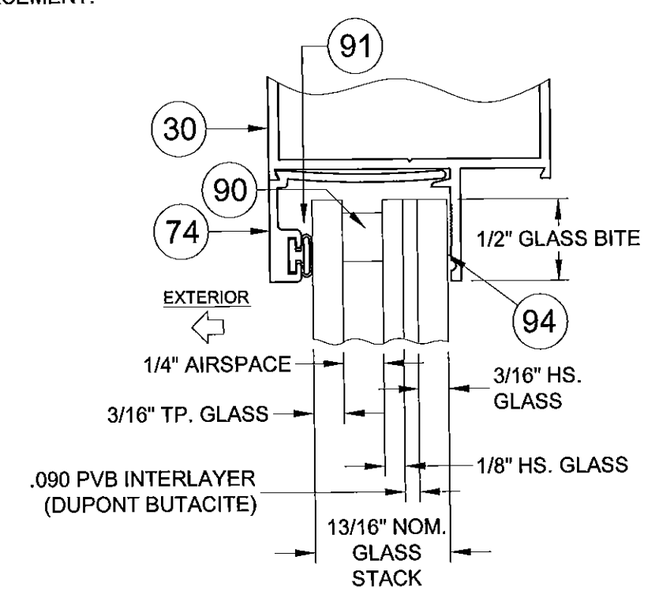

13/16" LAMI IG NOM.
GLAZING OPTION E, NOTE 1

PRODUCT REVIEWED as complying with the Florida Building Code
Acceptance No. 15-0528.24
Expiration Date OCT 18, 2017
By Ishag L. Hamade
Miami Dade Product Control

Drawn By:	J ROSOWSKI
Drawn Date:	04/04/12
Revision:	5TH EDITION (2014) FBC UPDATE
Rev. Date:	E MAY 2015
Description:	NOTES AND GLAZING DETAILS
Title:	ALUM. FRENCH DOOR & SIDE LITES, IMPACT
Rev:	E
Drawing No.	11005-1
Sheet:	1 OF 10
Scale:	NTS
Series/Model:	FD-101

PGT®
1070 TECHNOLOGY DRIVE
N. VENICE, FL 34275
P.O. BOX 1529
NOKOMIS, FL 34274
CERT. OF AUTH. #29296

ANTHONY LYNN MILLER LICENSE No. 58705 STATE OF FLORIDA PROFESSIONAL ENGINEER
5/22/15
A. LYNN MILLER, P.E.
P.E.# 58705

TABLE 1. DESIGN PRESSURES FOR ALL CONFIGURATIONS

APPROVED CONFIGURATIONS: X, XX, O, OX, XO, OXO, XXO, OXX & OXXO

(FOR DOORS W/ SIDE LITES THE LOWER DP FOR THE DOOR OR SIDE LITE PREVAILS)

REINFORCEMENT IS REQUIRED AT DOOR & SIDE LITE CONNECTIONS

		DOORS WITH GLASS TYPES A, B, C, D OR E									
		HEIGHT									
X WIDTH	XX WIDTH	6^{8} - 79 3/4"		7^{0} - 83 3/4"		87 3/4"		91 3/4"		8^{0} - 95 3/4"	
3^{0} 37 1/2"	6^{0} 71 3/4"	+75.0	-75.0	+75.0	-75.0	+75.0	-75.0	+75.0	-75.0	+75.0	-75.0
	O WIDTH	SINGLE SIDE LITES WITH GLASS TYPE A									
	27 3/4"	+75.0	-75.0	+75.0	-75.0	+75.0	-75.0	+75.0	-75.0	+75.0	-75.0
	36 1/8"	+75.0	-75.0	+75.0	-75.0	+71.4	-71.4	+67.6	-67.6	+64.2	-64.2
	36 3/4"	+75.0	-75.0	+74.9	-74.9	+70.4	-70.4	+66.6	-66.6	+63.1	-63.1
	O WIDTH	SINGLE SIDE LITES WITH GLASS TYPES B, C, D OR E									
	36 3/4"	+75.0	-75.0	+75.0	-75.0	+75.0	-75.0	+75.0	-75.0	+75.0	-75.0

TABLE 2. DESIGN PRESSURES FOR COMBINED DOOR / SIDE LITES ONLY

APPROVED CONFIGURATIONS: OX, XO, OXO, XXO, OXX & OXXO

(THE LOWER DP FOR THE DOOR OR SIDE LITE PREVAILS.)

REINFORCEMENT IS NOT REQUIRED AT DOOR & SIDE LITE CONNECTION

		GLASS TYPES A, B, C, D OR E									
		HEIGHT									
X WIDTH	XX WIDTH	6^{8} - 79 3/4"		7^{0} - 83 3/4"		87 3/4"		91 3/4"		8^{0} - 95 3/4"	
2^{0} 25 1/2"	4^{0} 47 3/4"	+58.6	-58.6	+55.4	-55.4	+52.4	-52.4	+49.8	-49.8	+47.4	-47.4
27 1/2"	51 3/4"	+54.9	-54.9	+51.8	-51.8	+49.0	-49.0	+46.5	-46.5	+44.3	-44.3
29 1/2"	55 3/4"	+51.7	-51.7	+48.8	-48.8	+46.1	-46.1	+43.8	-43.8	+41.6	-41.6
2^{6} 31 1/2"	5^{0} 59 3/4"	+49.0	-49.0	+46.2	-46.2	+43.6	-43.6	+41.4	-41.4	+39.3	-39.3
2^{8} 33 1/2"	5^{4} 63 3/4"	+43.1	-43.1	+43.1	-43.1	+41.5	-41.5	+39.3	-39.3	+37.3	-37.3
35 1/2"	67 3/4"	+38.1	-38.1	+38.1	-38.1	+38.1	-38.1	+37.5	-37.5	+35.6	-35.6
3^{0} 37 1/2"	6^{0} 71 3/4"	+34.0	-34.0	+34.0	-34.0	+34.0	-34.0	+34.0	-34.0	+34.0	-34.0
	O WIDTH	GLASS TYPES A, B, C, D OR E									
	10 3/4"	+75.0	-75.0	+75.0	-75.0	+75.0	-75.0	+75.0	-75.0	+75.0	-75.0
	12 3/4"	+75.0	-75.0	+75.0	-75.0	+75.0	-75.0	+75.0	-75.0	+75.0	-75.0
SINGLE SIDE LITE	19"	+72.4	-72.4	+68.5	-68.5	+65.0	-65.0	+61.9	-61.9	+59.0	-59.0
	21 3/4"	+64.5	-64.5	+61.0	-61.0	+57.8	-57.8	+55.0	-55.0	+52.4	-52.4
	27 3/4"	+52.9	-52.9	+49.9	-49.9	+47.2	-47.2	+44.7	-44.7	+42.6	-42.6
	36 1/8"	+35.2	-35.2	+35.2	-35.2	+35.2	-35.2	+35.2	-35.2	+34.4	-34.4
	36 3/4"	+34.0	-34.0	+34.0	-34.0	+34.0	-34.0	+34.0	-34.0	+34.0	-34.0

NOTES:

1. GLASS TYPES:
   A. 3/8" LAMI (1/8" A, .090 PVB, 3/16" HS)
   B. 3/8" LAMI (1/8" HS, .090 PVB, 3/16" HS)
   C. 7/16" LAMI (3/16" A, .090 PVB, 3/16" HS)
   D. 7/16" LAMI (3/16" HS, .090 PVB, 3/16" HS)
   E. 13/16" LAMI IG (3/16" TP, 1/4" AIRSPACE, 1/8" HS, .090 PVB, 3/16" HS)

2. COMBINED DOOR & SIDE LITE WIDTHS FOR TABLE 1 OR 2.
   MAX. OX/XO WIDTH = 73 1/2"
   MAX. OXO WIDTH = 109 1/2"
   MAX. XXO/OXX WIDTH = 107 3/4"
   MAX. OXXO WIDTH = 143 3/4"

3. SINGLE DOORS 33 5/8" WIDE OR OVER AND THE OPERABLE PANEL OF DOUBLE DOORS 64 1/8" WIDE OR OVER FROM EITHER TABLE COMPLY WITH THE EGRESS REQUIREMENTS OF THE FBC. NARROWER DOORS MAY BE USED WHERE EGRESS IS NOT REQUIRED BY CODE.

4. DESIGN PRESSURES UNDER 40 P.S.F. ARE NOT APPLICABLE IN MIAMI-DADE COUNTY.

5. EXAMPLES OF COMBINED DOOR AND SIDE LITE DESIGN PRESSURES:

   EX. A FROM TABLE 1.
   OXO WITH GLASS TYPE A
   30" WIDE x 90" HIGH SINGLE DOOR WITH 29" SIDE LITES
   DESIGN PRESSURE = +67.6 / -67.6 PSF

   EX. B FROM TABLE 1.
   OXXO WITH GLASS TYPE A
   68" WIDE x 85" HIGH DOUBLE DOOR WITH 36 1/2" SIDE LITES
   DESIGN PRESSURE = +70.4 / -70.4 PSF

   EX. C FROM TABLE 2.
   OXO WITH GLASS TYPE C
   30" WIDE x 87 3/4" HIGH SINGLE DOOR WITH 26" SIDE LITES
   DESIGN PRESSURE = +43.6 / -43.6 PSF

   EX. D FROM TABLE 2.
   OXXO WITH GLASS TYPE C
   63 3/4" WIDE x 80" HIGH DOUBLE DOOR WITH 26" SIDE LITES
   DESIGN PRESSURE = +43.1 / -43.1 PSF

6. FOR COMBINED DOOR AND SIDE LITES FROM TABLE 1, WHICH REQUIRED REINFORCEMENT AT DOOR TO SIDE LITE CONNECTION SEE SECTION E-E, SHEET 5 FOR REINFORCEMENT DETAIL.

PRODUCT REVISED
as complying with the Florida
Building Code
Acceptance No. 15-0523.24
Expiration Date 10/18/17
By Miami Dade Product Control

Drawn By: J ROSOWSKI
Drawn Date: 04/04/12
Revision: NO CHANGES THIS SHEET
Rev. Date: E MAY 2015
Description: DESIGN PRESSURES
Title: ALUM. FRENCH DOOR & SIDE LITES, IMPACT
Series/Model: FD-101
Scale: NTS
Sheet: 2 OF 10
Drawing No. 11005-1
Rev: E

1070 TECHNOLOGY DRIVE
N. VENICE, FL 34275
P.O. BOX 1529
NOKOMIS, FL 34274
CERT. OF AUTH. #29296

ANTHONY LYNN MILLER LICENSE No. 58705 STATE OF FLORIDA PROFESSIONAL ENGINEER
5/22/15
A. LYNN MILLER, P.E.
P.E.# 58705

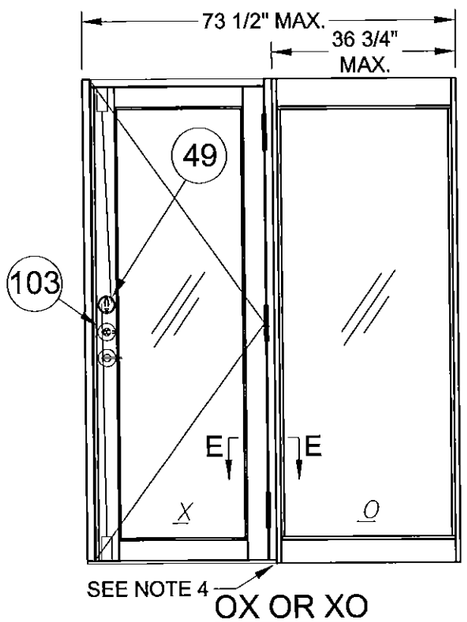

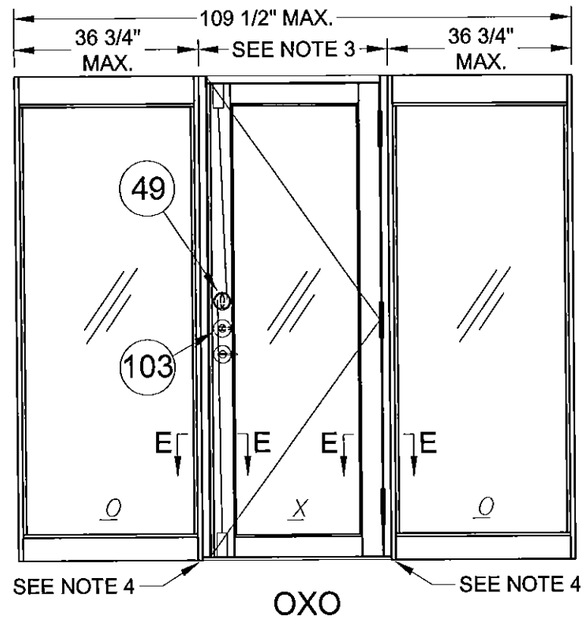

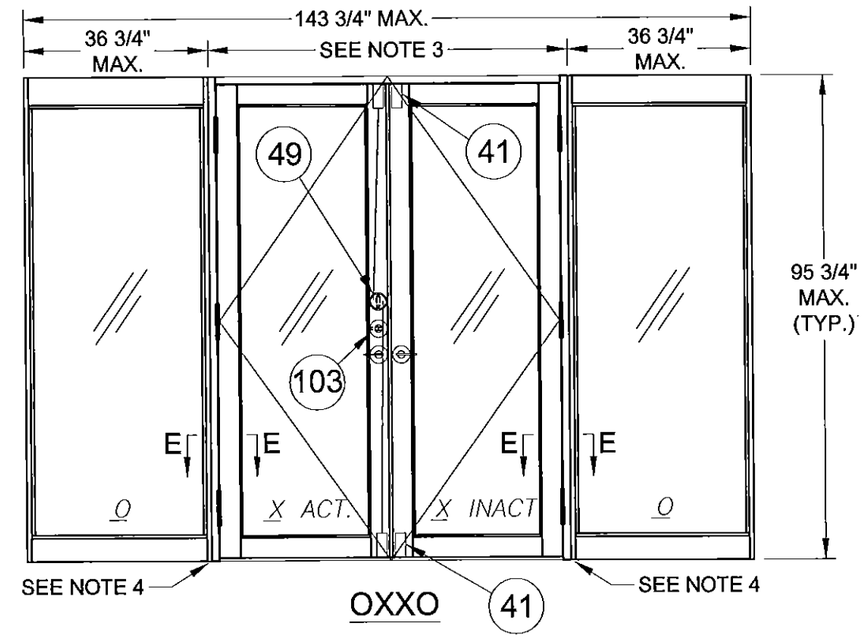

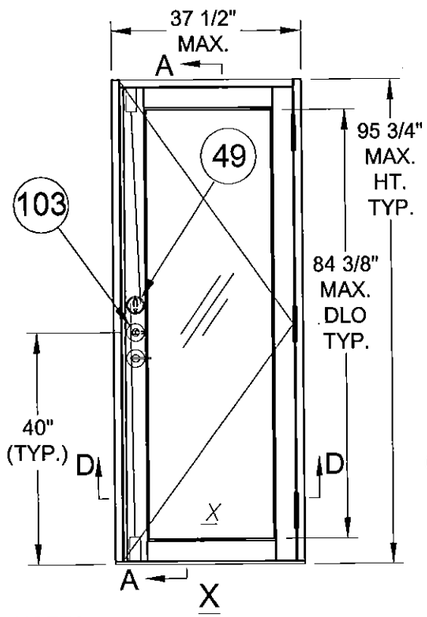

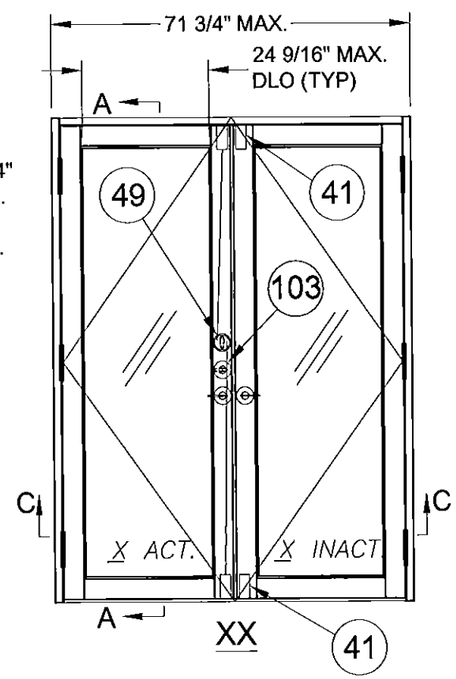

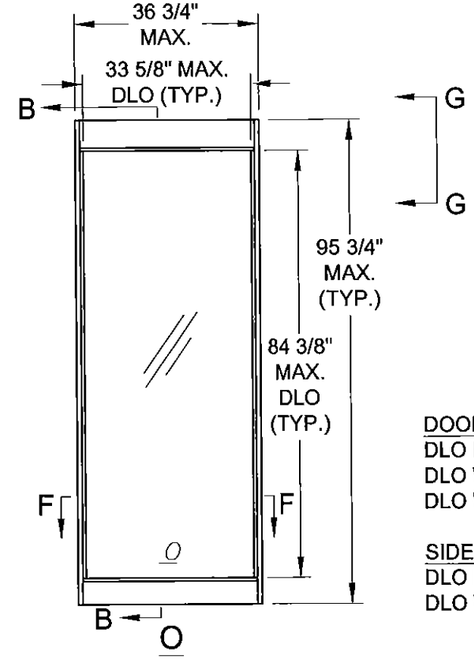

DOOR
DLO HEIGHT = HEIGHT -11 3/8"
DLO WIDTH 'X' = DOOR WIDTH -12 15/16"
DLO WIDTH 'XX' = DOOR WIDTH/2 -11 5/16"

SIDE LITE
DLO HEIGHT = HEIGHT -11 3/8"
DLO WIDTH = WIDTH -3 1/8"

NOTES:
1. FOR ANCHORAGE DETAILS SEE SHEETS 8 THROUGH 10.
2. FOR HORIZONTAL AND VERTICAL SECTIONS SEE SHEETS 4 AND 5.
3. SIDE LITES OVERLAP 'X' AND 'XX' DOORS BY 3/4" WHEN ASSEMBLED TO MAKE 'XO', 'OX', 'OXO' 'XXO', 'OXX' AND 'OXXO' CONFIGURATIONS.
4. REINFORCEMENT LOCATION FOR SIDE LITE TO DOOR CONNECTIONS (SEE APPLICABILITY SHEET 2).
5. CLEAR OPENING FOR 'X' AND 'XX' DOORS AS FOLLOWS: ('X' DOORS = WIDTH - 5.646) ('XX' DOOR = DOOR WIDTH/2 -4.079)

PRODUCT REVISED
as complying with the Florida Building Code
Acceptance No 15-0528.24
Expiration Date 10/18/17
By Ishaq I. Chand
Miami Dade Product Control

Rev.	Date:	Revision:	Drawn By:	Drawn Date:
E	MAY 2015	NO CHANGES THIS SHEET	J ROSOWSKI	04/04/12

Description: ELEVATIONS

Title: ALUM. FRENCH DOOR & SIDE LITES, IMPACT

Series/Model:	Scale:	Sheet:	Drawing No.	Rev:
FD-101	NTS	3 OF 10	11005-1	E

PGT®
1070 TECHNOLOGY DRIVE
N. VENICE, FL 34275
P.O. BOX 1529
NOKOMIS, FL 34274
CERT. OF AUTH. #29296

ANTHONY LYNN MILLER
LICENSE
No. 58705
STATE OF FLORIDA
PROFESSIONAL ENGINEER
A. LYNN MILLER, P.E.
P.E.# 58705
5/22/15

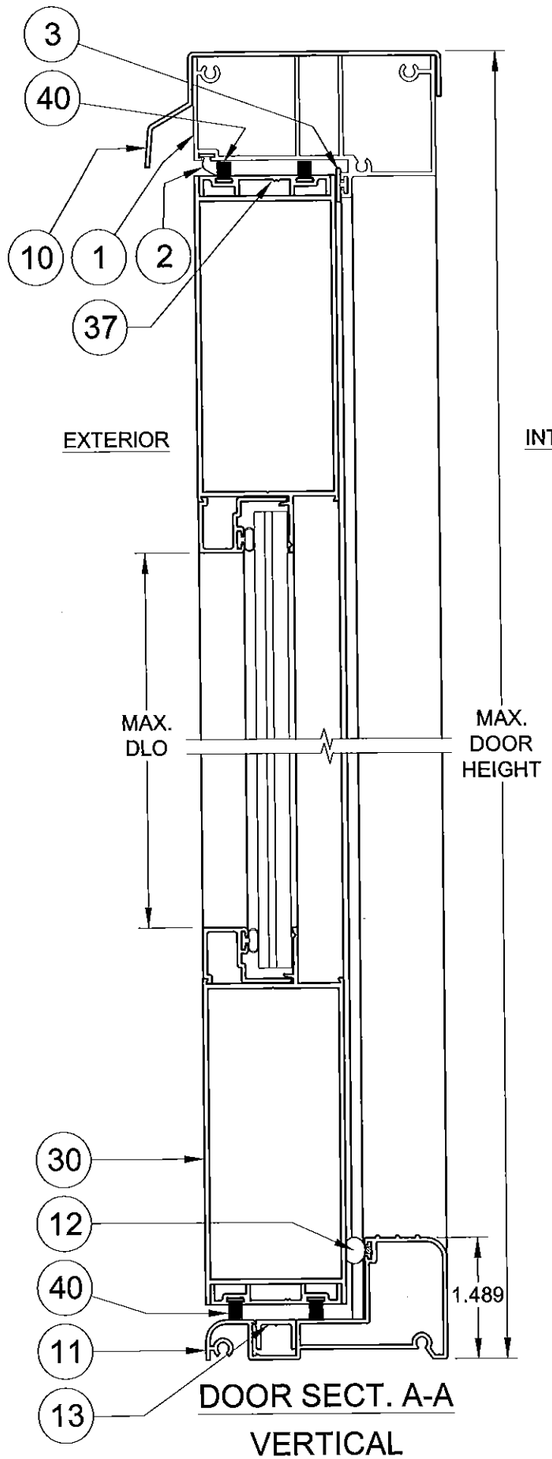

DOOR SECT. A-A
VERTICAL

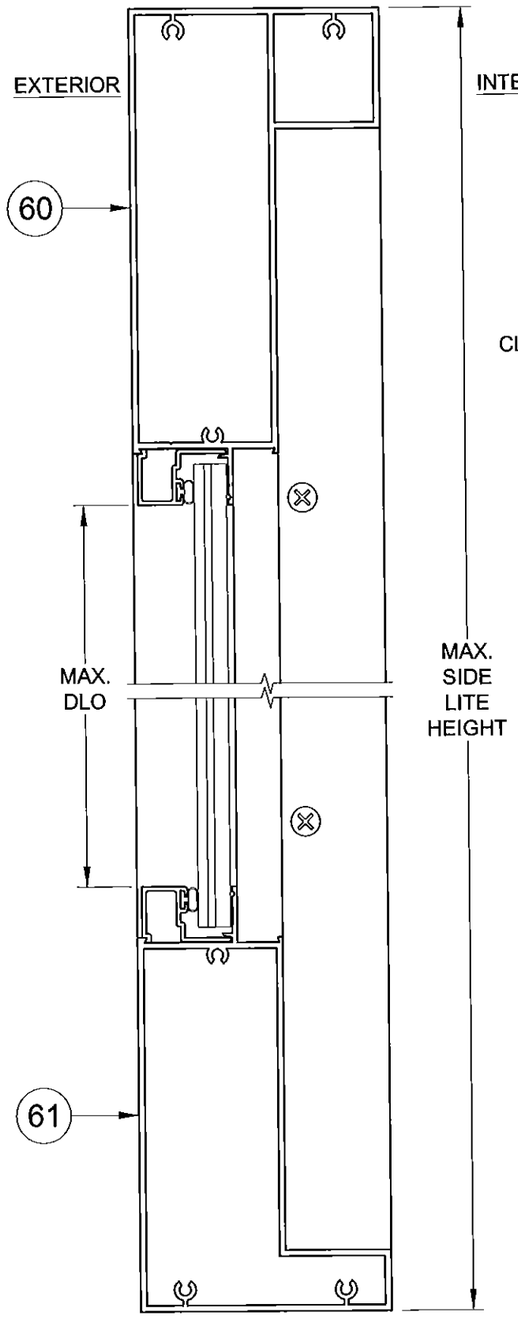

SL SECT. B-B
VERTICAL

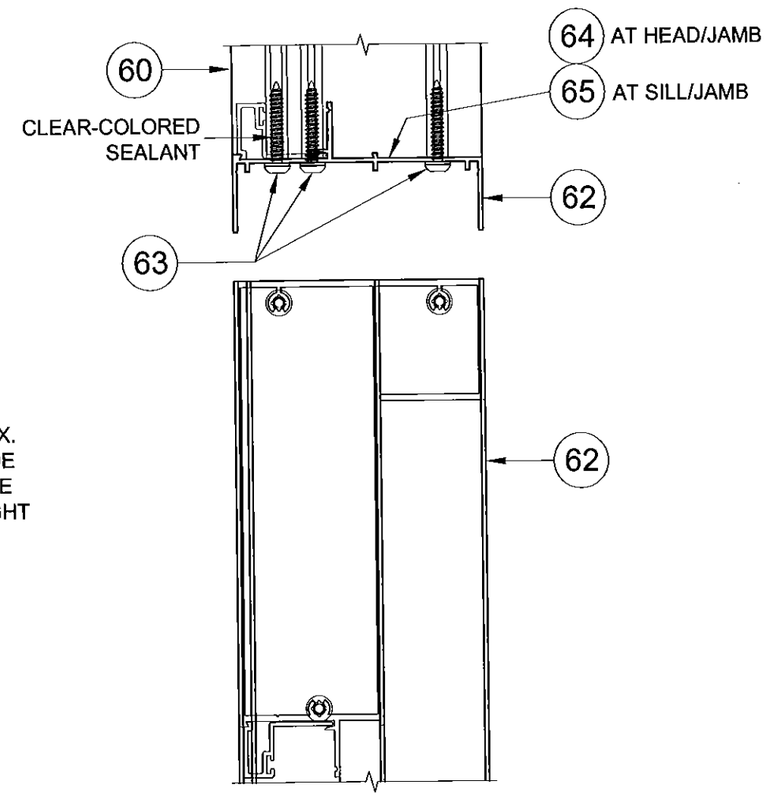

SL VIEW G-G
CORNER ASSEMBLY

PRODUCT REVISED
as complying with the Florida
Building Code
Acceptance No 15-0528.24
Expiration Date 10/18/17
By [signature]
Miami Dade Product Control

Drawn By:	J ROSOWSKI
Drawn Date:	04/04/12
Rev.	E
Date:	MAY 2015
Revision:	NO CHANGES THIS SHEET
Description:	VERTICAL SECTIONS
Title:	ALUM. FRENCH DOOR & SIDE LITES, IMPACT
Series/Model:	FD-101
Scale:	NTS
Sheet:	4 OF 10
Drawing No.	11005-1
Rev:	E

PGT®
1070 TECHNOLOGY DRIVE
N. VENICE, FL 34275
P.O. BOX 1529
NOKOMIS, FL 34274
CERT. OF AUTH. #29296

ANTHONY LYNN MILLER
LICENSE
No. 58705
STATE OF FLORIDA
PROFESSIONAL ENGINEER
A. LYNN MILLER, P.E.
P.E.# 58705

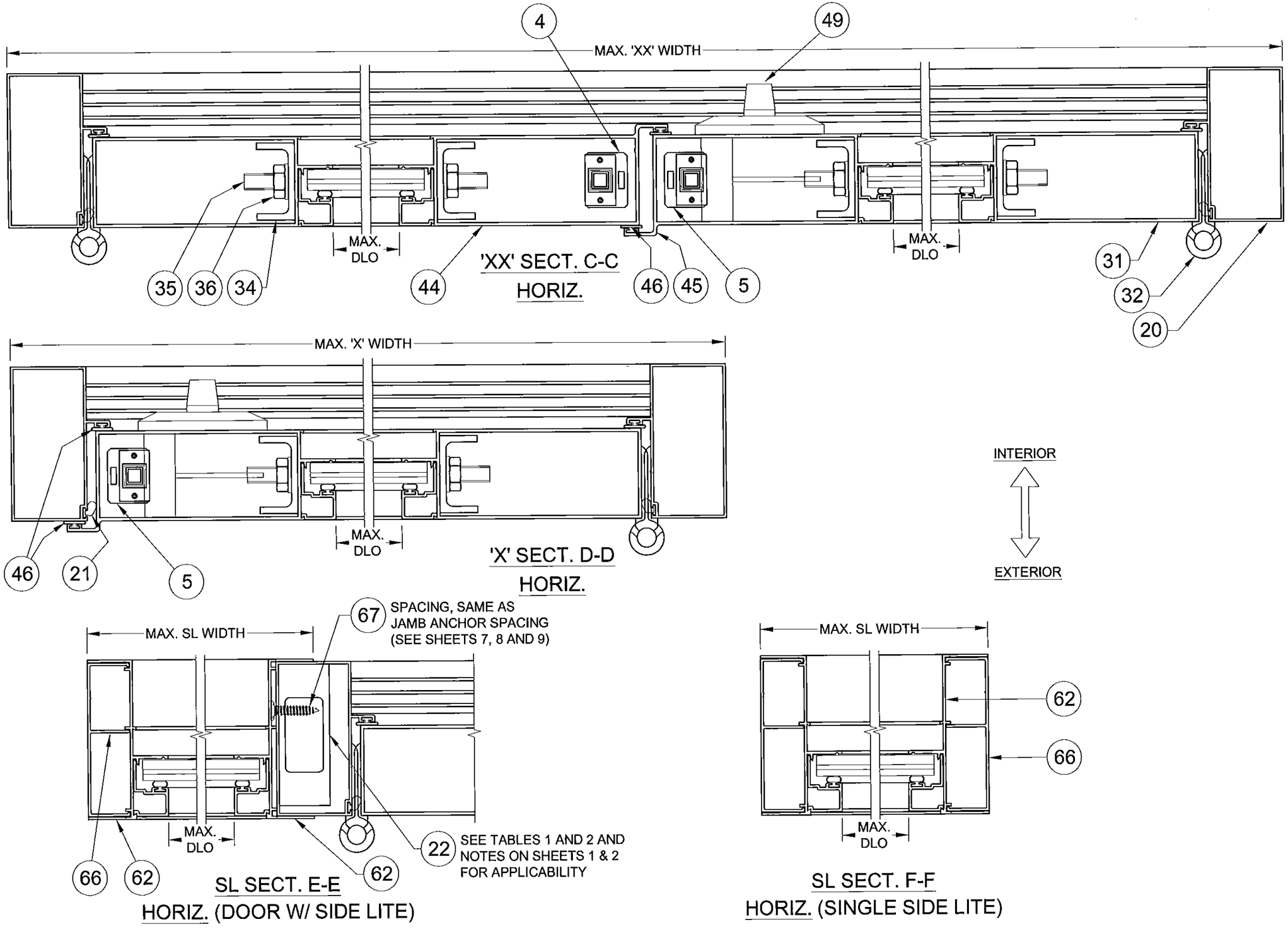

'XX' SECT. C-C
HORIZ.

'X' SECT. D-D
HORIZ.

SL SECT. E-E
HORIZ. (DOOR W/ SIDE LITE)

SL SECT. F-F
HORIZ. (SINGLE SIDE LITE)

PRODUCT REVISED
as complying with the Florida Building Code
Acceptance No 15-0528.24
Expiration Date 10/18/17
By Ishaq I. Chaudhry
Miami Dade Product Control

Drawn By:	J ROSOWSKI
Drawn Date:	04/04/12
Revision:	NO CHANGES THIS SHEET
Rev.	E
Date:	MAY 2015
Description:	HORIZONTAL SECTIONS
Title:	ALUM. FRENCH DOOR & SIDE LITES, IMPACT
Series/Model:	FD-101
Scale:	NTS
Sheet:	5 OF 10
Drawing No.	11005-1
Rev:	E

PGT®
1070 TECHNOLOGY DRIVE
N. VENICE, FL 34275
P.O. BOX 1529
NOKOMIS, FL 34274
CERT. OF AUTH. #29296

ANTHONY LYNN MILLER
LICENSE
No. 58705
STATE OF FLORIDA
PROFESSIONAL ENGINEER
5/22/15
A. LYNN MILLER, P.E.
P.E.# 58705

ITEM	DWG #	PGT#	DESCRIPTION
1	943B	60411	FRAME HEAD
2	1010	6Q300	WSTP.,Q-LON .190 X .375 HIGH
3	7070	67070K	BULB WEATHERSTRIP .187 X .300 HIGH
4	955	7955X	FLUSHBOLT STRIKEPLATE
5	938	7938X	2 PT. LOCK STRIKEPLATE
6	956	7956A	FRAME HEAD STRIKEPLATE BACKING PLATE
7		7832X12FPXP	#8-32 X .500 PH. FL. MS - S.S. W/SILICONE PATCH
8	995	70995	GASKET (BETWEEN THRESHOLD & FRAME JAMB)
9	996	70996	GASKET (BETWEEN HEAD & FRAME JAMB)
10	952A	6533016	FILLER HEAD ADAPTER
11	11000	611000M	OUTSWING THRESHOLD
12	1670	671670	WSTP, .350 RD FOAM FILL T-SLOT (AMSBURY#32011)
13	11004A	611004M	OUTSWING THRESHOLD CHANNEL COVER
14	11001A	411001A	ACETAL SPACER .065 (INHOUSE INJECTION MOLDED)
15	11002A	411002A	ACETAL SPACER .095 (INHOUSE INJECTION MOLDED)
16	11003A	411003A	ACETAL SPACER .140 (INHOUSE INJECTION MOLDED)
20	915D	60380	FRAME JAMB (OUTSWING)
21	1010	6Q300	WSTP.,Q-LON .190 X .375 HIGH
22	6608	66608M	REINFORCEMENT, 1.000 X 2.750 X 0.650, 6061-T5
23	1140	78X112PSATS	#8 X 1.500 PH SQ A T/S
24	1048	71048	JAMB SCREW COVER CAP
25	930	41721N	STRIKE PLATE INSERT
26	1118	710X34PFA	#10 X .750 PH. FL. SMS
27	7070	67070K	BULB WEATHERSTRIP .187 X .300 HIGH
30	910D	6910	DOOR PANEL, TOP & BOTTOM RAIL
31	911E	6911	DOOR PANEL, SIDE RAIL
32	917	7FRMO	HINGE EXTRUSION
33	1178	71058FP W,B	#10 X .625 PH. FL. SMS
34	913A	60378M	TRUSS CLAMP
35	1130	6TRODA	5/16-18 THREADED ROD
36	990	7990NUTA	5/16-18 FLANGED HEX NUT
37	914A	60379M	WEATHERSTRIP CHANNEL
38		7834FPT	#8 X .75 PH. FL. TEK
39	997	70997	GASKET (BETWEEN PANEL HEAD/SILL & PANEL STILES)
40	1023	67924G	WSTP., .187 X .250 HIGH, FINSEAL
41	928	41720	SLIDE BOLT ASSY. (INACTIVE PANEL ONLY)
42	1145	76X12FPAW	#6 X .500 PH FL SMS TYPE BDS
43	1212	7P30GG	SILL DUST PLUG (INACTIVE PNL)
44	983B	6983	DOOR PANEL ASTRAGAL 1 (OUTSWING)
45	984B	6984	DOOR PANEL ASTRAGAL 2 (OUTSWING)
46	1213	6Q200K	WSTP.,Q-LON .190 X .200 HIGH
47	929	74UBLOK	LOCK SUPPORT ASSY. (41707 & 41708)
48	1139	7634F	#6 X .750 PH. FL. SMS
49	982	FD2PTAY	2 PT. LOCK ASSY.
50		6R180FS	RUBBER SLEEVE
51	930	41721	STRIKE PL. INSERT (INACTIVE PANEL)
52	931	7FRSPX	DEADBOLT STRIKE PLATE
53	1118	710X34PFA	#10 X .750 PH FL. SMS
54	957	70957X	HANDLE STRIKE PLATE
55	1118	710X34PFA	#10 X .750 PH FL. SMS

ITEM	DWG #	PGT#	DESCRIPTION
60	920D	6920D	SIDELITE HEADER
61	921D	6921	SIDELITE SILL
62	916B	60381	SIDELITE JAMB
63	1155	781PQA	#8 X 1.000 QUAD PN. SMS
64	998	7998	HEAD GASKETS (STOCKING #70998)
65	999	7999	SILL GASKETS (STOCKING #70999)
66	934A	61641M	SIDELITE JAMB ADAPTER
67			#12 X 1.000 SHEET METAL SCREW
70		712653K	SETTIING BLOCK, 3/32" X 1/4" X 1" W/PSA, 85 +/-5 DURO.
71		71267K	SETTING BLOCK, 1/16" X 1/2" X 1" W/PSA, 85 +/-5 DURO.
72	4222A	64222	BEAD, 7/16"
73	988	6988	BEAD, 3/8"
74	4067B	64067	BEAD, 13/16" IG
90		6DURAK14	1/4" DURASEAL IG SPACER
91		6TP248	BULB, THIN (USED IN EXTRUDED BEAD)
92	986	64986	BEAD, INTERIOR
93	1224	6TP247	BULB, THICK (USED IN EXTRUDED BEAD), 65 +/-1 DURO.
94	GLAZING SILICONE, DOW 899 OR 983		
95	GLASS, 3/8" LAMI - 1/8" A, .90 PVB, 3/16" HS		
96	GLASS, 3/8" LAMI - 1/8" HS, .90 PVB, 3/16" HS		
97	GLASS, 7/16" LAMI - 3/16" A, .90 PVB, 3/16" HS		
98	GLASS, 7/16" LAMI - 3/16" HS, .90 PVB, 3/16" HS		
99	GLASS, 13/16" LAMI IG - 3/16" TP, 1/4" AIRSPACE, 1/8" HS, .90 PVB, 3/16" HS		
103	OFF-THE SHELF		DEAD BOLT LOCK

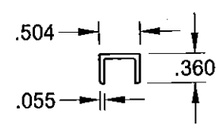

(13) OUTSWING THRESHOLD CHANNEL COVER
6063-T6

not used
68, 69, 75--89
100 – 102

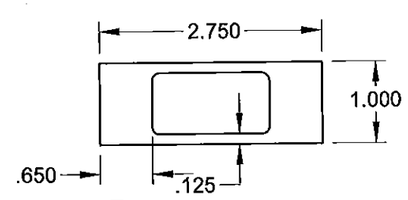

(22) TUBE MULL
6063-T5

PRODUCT REVISED
to complying with the Florida
Building Code
Acceptance No. 15-0528.24
Expiration Date 10/18/17
By Ishwar L. Chand
Miami Dade Product Control

Drawn By: J ROSOWSKI
Drawn Date: 04/04/12
Revision: NO CHANGES THIS SHEET
Rev. E
Date: MAY 2015
Description: PARTS LIST
Title: ALUM. FRENCH DOOR & SIDE LITES, IMPACT
Drawing No. 11005-1
Rev. E
Scale: NTS
Sheet: 6 OF 10
Series/Model: FD-101

PGT®
1070 TECHNOLOGY DRIVE
N. VENICE, FL 34275
P.O. BOX 1529
NOKOMIS, FL 34274
CERT. OF AUTH. #29296

ANTHONY LYNN MILLER
LICENSE No. 58705
STATE OF FLORIDA
PROFESSIONAL ENGINEER
5/22/15
A. LYNN MILLER, P.E.
P.E.# 58705

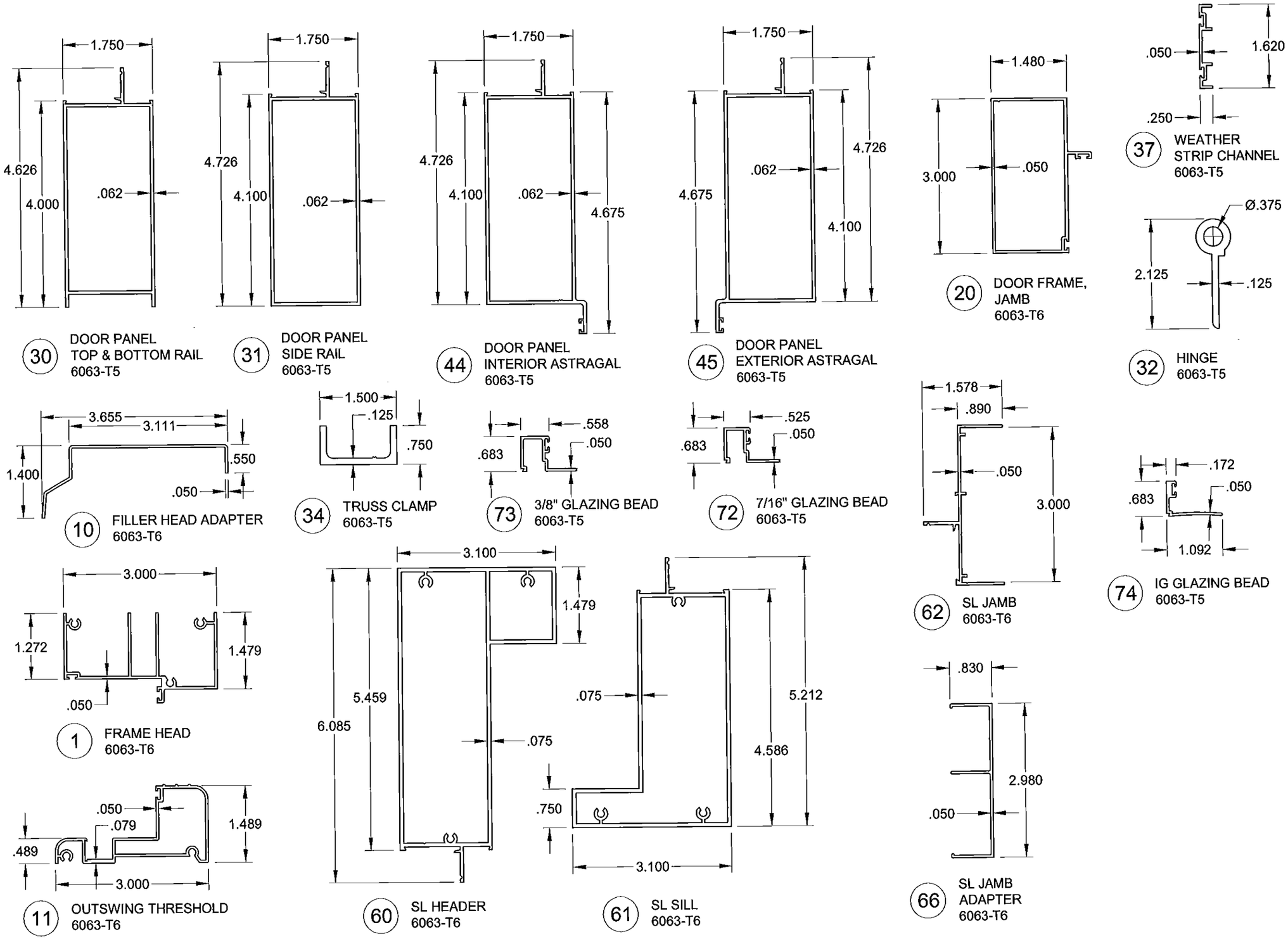

PRODUCT REVISED
as complying with the Florida
Building Code
Acceptance No 15-0528.24
Expiration Date 10/18/17
By Ishang T. Chang
Mineral Dade Product Control

Rev.	Date:	Revision:	Drawn By:	Drawn Date:
E	MAY 2015	NO CHANGES THIS SHEET	J ROSOWSKI	04/04/12

Description: EXTRUSIONS

Title: ALUM. FRENCH DOOR & SIDE LITES, IMPACT

Series/Model: FD-101

Scale: NTS

Sheet: 7 OF 10

Drawing No. 11005-1

Rev: E

PGT®
1070 TECHNOLOGY DRIVE
N. VENICE, FL 34275
P.O. BOX 1529
NOKOMIS, FL 34274
CERT. OF AUTH. #29296

ANTHONY LYNN MILLER
LICENSE
No. 58705
STATE OF FLORIDA
PROFESSIONAL ENGINEER
A. LYNN MILLER, P.E.
P.E.# 58705
5/22/15

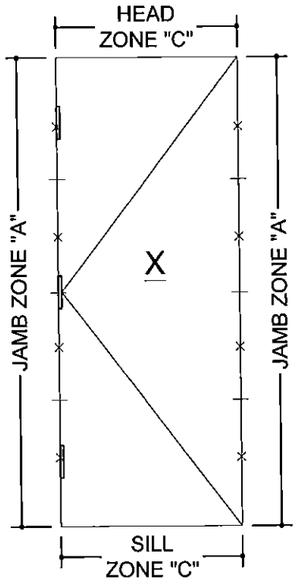

SEE TABLE 3., SHT. 9

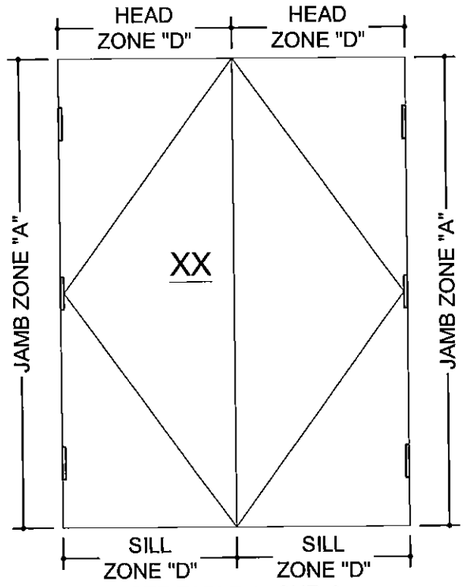

SEE TABLE 4., SHT. 9

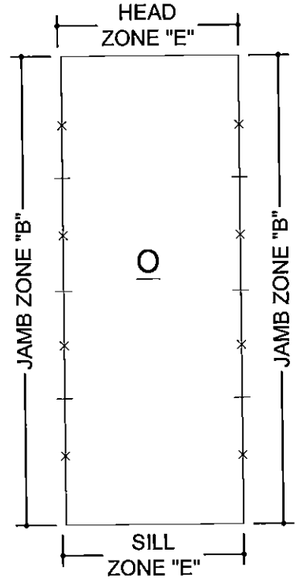

SEE TABLE 5., SHT. 9

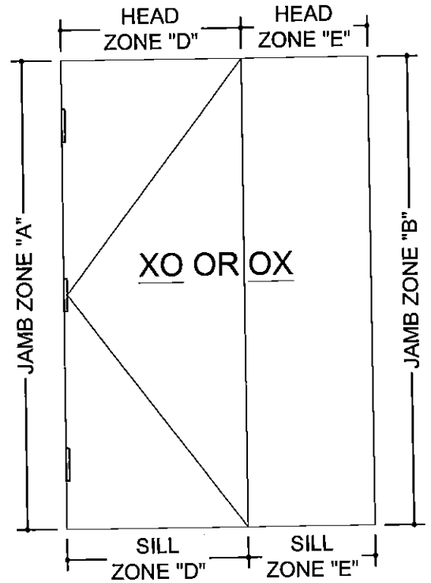

SEE TABLE 6., SHT. 9

× = MINIMUM JAMB ANCHOR LOCATION.

— = ADDITIONAL JAMB ANCHOR LOCATION, EQUALLY SPACED AS REQUIRED PER TABLES 3-7 ON SHEET 9.

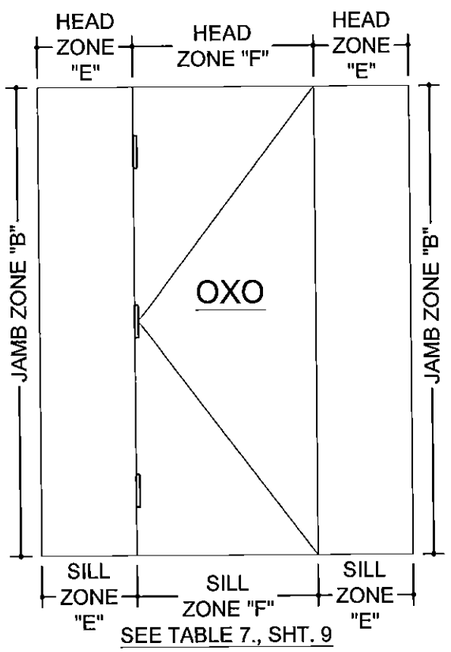

SEE TABLE 7., SHT. 9

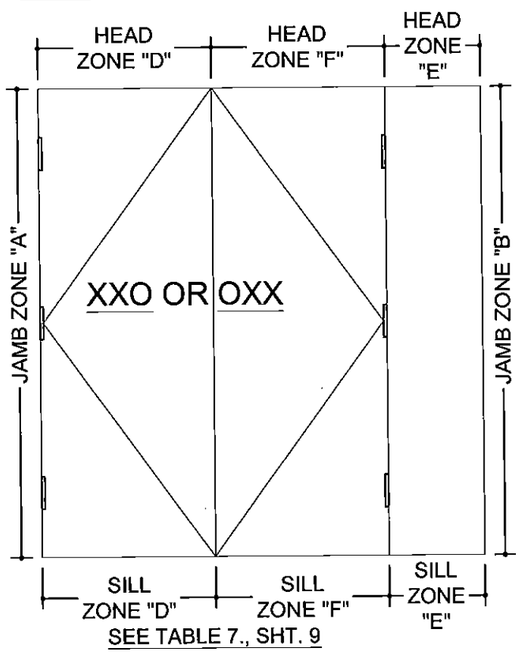

SEE TABLE 7., SHT. 9

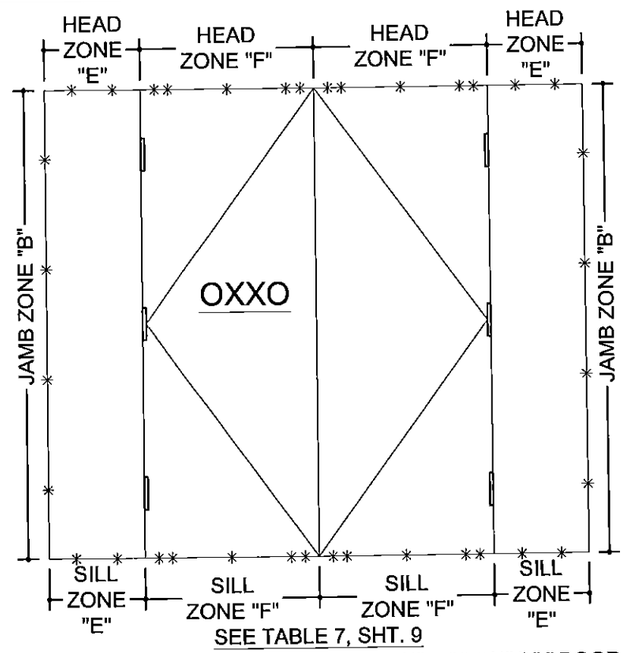

SEE TABLE 7, SHT. 9

EXAMPLE OF ANCHORAGE FOR A 71 3/4" x 83 3/4" 'XX' DOOR, WITH 19" x 83 3/4" SIDE LITES (SEE SOLUTION AT RIGHT)

EXAMPLE ANCHORAGE SOLUTION FOR A CONCRETE OXXO INSTALLATION

A. 19" x 83 3/4" SIDE LITES "B" AND "E" ZONE ANCHORS FROM TABLE 7, SHEET 9.

PLUS;

B. 71 3/4" x 83 3/4" XX DOOR ZONE "F" ANCHORS FROM TABLE 4, SHEET 9, EACH "F" ZONE.

SEE ENCIRCLED VALUES, SHEET 9

SOLUTION:
TOTALS (4) TYPE 1 OR 2 ANCHORS EACH JAMB AND 2+5+5+2 = (14) TYPE 1 OR 2 ANCHORS AT HEAD AND AT SILL.

✳ = ANCHOR LOCATION FOR EXAMPLE ABOVE

NOTES:

1. APPROVED ANCHOR TYPES ARE: 1. 1/4" ELCO TAPCONS 2. 1/4" ELCO SS4 CRETE-FLEX MASONRY ANCHORS 3. #12 SCREWS
2. (E) ANCHOR QUANTITIES ARE BASED ON SPACING AS FOLLOWS (4" MIN. O.C. FOR CONCRETE, 6" MIN. O.C. FOR CMU): SEE EXAMPLE OXXO ANCHOR LAYOUT ABOVE.
   JAMBS (ALL): 13 1/4" MAX. FROM CORNERS AND 23 1/8" MAX. O.C.
   HEAD & SILL OF DOORS: 6" MAX. FROM CORNERS, 9" MAX. FROM ASTRAGAL CENTERS AND 20 7/8" MAX. O.C.
   HEAD & SILL OF SIDE LITES: 6" MAX. FROM CORNERS AND 24 3/4" MAX. O.C.
3. TO DETERMINE ANCHOR QUANTITIES FIND THE CONFIGURATION ABOVE THEN REFER TO THE APPROPRIATE TABLES ON SHEET 9.

PRODUCT REVISED as complying with the Florida Building Code
Acceptance No. 15-0528.24
Expiration Date 10/18/17
By [signature]
Miami Dade Product Control

Drawn By:	J ROSOWSKI
Drawn Date:	04/04/12
Revision:	CHANGE MIN. ANCHOR O.C. FOR CONC./CMU
Rev.	E
Date:	MAY 2015
Description:	ANCHORAGE, ELEVATIONS
Title:	ALUM. FRENCH DOOR & SIDE LITES, IMPACT
Series/Model:	FD-101
Scale:	NTS
Sheet:	8 OF 10
Drawing No.	11005-1
Rev:	E

PGT®
1070 TECHNOLOGY DRIVE
N. VENICE, FL 34275
P.O. BOX 1529
NOKOMIS, FL 34274
CERT. OF AUTH. #29296

ANTHONY LYNN MILLER LICENSE No. 58705 STATE OF FLORIDA PROFESSIONAL ENGINEER
5/22/15
A. LYNN MILLER, P.E.
P.E.# 58705

TABLE 3. X DOORS

GLASS TYPES ANCHOR TYPE & SUBSTRATE	A, B, C, D, E					
	2,3, WOOD			1,2, CONC		
DOOR WIDTHS	LOAD ZONES					
"X" - 25.50 TO 37.50	X - JAMB "A"	X - HEAD/SILL "C"	X - HEAD/SILL "F" (USE W / TABLE 7.)	X - JAMB "A"	X - HEAD/SILL "C"	X - HEAD/SILL "F" (USE W / TABLE 7.)
WIDTH x HT.						
25.50 x 79.75	5	2	7	4	2	3
83.75	5	2	7	4	2	3
87.75	5	2	7	4	2	3
91.75	5	2	7	4	2	3
95.75	6	2	7	4	2	3
27.50 x 79.75	5	2	7	4	2	3
83.75	5	2	7	4	2	3
87.75	5	2	7	4	2	3
91.75	6	2	7	4	2	5
95.75	6	2	7	4	2	5
29.50 x 79.75	5	2	8	4	2	3
83.75	5	2	8	4	2	3
87.75	6	2	8	4	2	5
91.75	6	2	8	4	2	5
95.75	6	2	8	4	2	5
31.50 x 79.75	5	2	8	4	2	3
83.75	6	2	8	4	2	5
87.75	6	2	8	4	2	5
91.75	6	2	8	4	2	5
95.75	7	2	10	4	2	5
33.50 x 79.75	6	3	8	4	3	3
83.75	6	3	8	4	3	5
87.75	6	3	8	4	3	5
91.75	7	3	10	4	3	5
95.75	7	3	10	4	3	5
35.50 x 79.75	6	3	8	4	3	5
83.75	6	3	8	4	3	5
87.75	6	3	8	4	3	5
91.75	7	3	10	4	3	5
95.75	7	3	10	4	3	5
37.50 x 79.75	6	3	8	4	3	5
83.75	6	3	8	4	3	5
87.75	7	3	10	4	3	5
91.75	7	3	10	4	3	5
95.75	7	3	10	4	3	5

TABLE 4. XX DOORS (ALSO X DOOR OF XO & OX)

GLASS TYPES ANCHOR TYPE & SUBSTRATE	A, B, C, D, E					
	2,3, WOOD			1,2, CONC		
DOOR WIDTHS	LOAD ZONES					
"XX" - 47.75 TO 71.75	XX - JAMB "A"	XX - HEAD/SILL "D"(USE ALSO W/ TABLE 6.)	XX - HEAD/SILL "F" (USE W / TABLE 7.)	XX - JAMB "A"	XX - HEAD/SILL "D"(USE ALSO W/ TABLE 6.)	XX - HEAD/SILL "F" (USE W / TABLE 7.)
WIDTH x HT.						
47.75 x 79.75	4	3	6	4	2	3
83.75	5	4	7	4	2	3
87.75	5	4	7	4	2	3
91.75	5	4	7	4	2	3
95.75	5	4	7	4	2	3
51.75 x 79.75	5	4	7	4	2	3
83.75	5	4	7	4	2	3
87.75	5	4	7	4	2	3
91.75	5	4	7	4	2	3
95.75	6	4	7	4	3	5
55.75 x 79.75	5	4	7	4	2	3
83.75	5	4	7	4	2	3
87.75	5	4	7	4	2	3
91.75	6	4	7	4	3	5
95.75	6	4	8	4	3	5
59.75 x 79.75	5	5	8	4	2	3
83.75	5	5	8	4	2	3
87.75	6	5	8	4	3	5
91.75	6	5	8	4	3	5
95.75	6	5	8	4	3	5
63.75 x 79.75	5	5	8	4	2	3
83.75	6	5	8	4	3	5
87.75	6	5	8	4	3	5
91.75	6	5	8	4	3	5
95.75	7	6	10	4	3	5
67.75 x 79.75	6	5	8	4	3	5
83.75	6	5	8	4	3	5
87.75	6	5	8	4	3	5
91.75	7	6	10	4	3	5
95.75	7	6	10	4	3	5
71.75 x 79.75	6	5	8	4	3	5
83.75	6	5	9	4	3	5
87.75	6	5	9	4	3	5
91.75	7	6	10	4	3	5
95.75	7	6	10	4	3	5

TABLE 5. O SIDE LITE

GLASS TYPES ANCHOR TYPE & SUBSTRATE	A, B, C, D, E			
	2,3, WOOD		1,2, CONC	
WIDTHS	LOAD ZONES			
"O" - 10.75 TO 36.75	O - JAMB "B"	O - HEAD/SILL "E"	O - JAMB "B"	O - HEAD/SILL "E"
WIDTH x HT.				
10.75 x 79.75	4	1	4	1
83.75	4	1	4	1
87.75	4	1	4	1
91.75	4	1	4	1
95.75	4	1	4	1
12.75 x 79.75	4	2	4	2
83.75	4	2	4	2
87.75	4	2	4	2
91.75	4	2	4	2
95.75	4	2	4	2
19.00 x 79.75	4	2	4	2
83.75	4	2	4	2
87.75	4	2	4	2
91.75	4	2	4	2
95.75	4	2	4	2
21.75 x 79.75	4	2	4	2
83.75	4	2	4	2
87.75	4	2	4	2
91.75	5	2	4	2
95.75	5	2	4	2
27.75 x 79.75	5	2	4	2
83.75	5	2	4	2
87.75	5	2	4	2
91.75	6	2	4	2
95.75	6	2	4	2
36.13 x 79.75	6	3	4	3
83.75	6	3	4	3
87.75	7	3	4	3
91.75	7	3	4	3
95.75	7	3	4	3
36.75 x 79.75	6	3	4	3
83.75	6	3	4	3
87.75	7	3	4	3
91.75	7	3	4	3
95.75	7	3	4	3

TABLE 6. XO & OX

GLASS TYPES ANCHOR TYPE & SUBSTRATE	A, B, C, D, E								
	2,3, WOOD				1,2, CONC				
DOOR WIDTHS	LOAD ZONES								
"X" - 25.50 TO 37.50	O - JAMB "B"	O - HEAD/SILL "E"	X - HEAD/SILL "D"	X - JAMB "A"	O - JAMB "B"	O - HEAD/SILL "E"	X - HEAD/SILL "D"	X - JAMB "A"	
SIDE LITE WIDTH x HT.									
10.75 x 79.75	4	2	USE JAMB ANCHOR FROM TABLE 3. AND SAME LINE HEAD QUANTITIES FROM TABLE 4. FOR DOOR WIDTH		4	2	USE JAMB ANCHOR FROM TABLE 3. AND SAME LINE HEAD QUANTITIES FROM TABLE 4. FOR DOOR WIDTH		
83.75	4	2			4	2			
87.75	4	2			4	2			
91.75	4	2			4	2			
95.75	4	2			4	2			
12.75 x 79.75	4	2			4	2			
83.75	4	2			4	2			
87.75	4	2			4	2			
91.75	4	2			4	2			
95.75	4	2			4	2			
19.00 x 79.75	4	3			4	2			
83.75	4	3			4	2			
87.75	4	3			4	2			
91.75	4	3			4	2			
95.75	4	3			4	2			
21.75 x 79.75	4	3			4	2			
83.75	4	3			4	2			
87.75	4	3			4	2			
91.75	5	3			4	2			
95.75	5	3			4	2			
27.75 x 79.75	5	3			4	2			
83.75	5	3			4	2			
87.75	5	3			4	2			
91.75	6	3			4	3			
95.75	6	3			4	3			
36.13 x 79.75	6	4			4	3			
83.75	6	4			4	3			
87.75	7	5			4	3			
91.75	7	5			4	3			
95.75	7	5			4	3			
36.75 x 79.75	6	4			4	3			
83.75	6	4			4	3			
87.75	7	5			4	3			
91.75	7	5			4	3			
95.75	7	5			4	3			

TABLE 7. OXO, XXO, OXX & OXXO

GLASS TYPES ANCHOR TYPE & SUBSTRATE	A, B, C, D, E					
	2,3, WOOD			1,2, CONC		
DOOR WIDTHS	LOAD ZONES					
"X" - 25.50 TO 37.50 "XX" - 47.75 TO 71.75	O - JAMB "B"	O - HEAD/SILL "E"	X,XX - HEAD/SILL "F"	O - JAMB "B"	O - HEAD/SILL "E"	X,XX - HEAD/SILL "F"
SIDE LITE WIDTH x HT.						
10.75 x 79.75	4	2	USE ANCHOR QUANTITIES FROM TABLE 3. OR 4. FOR EACH ZONE OF APPLICABLE DOOR WIDTH	4	2	USE ANCHOR QUANTITIES FROM TABLE 3. OR 4. FOR EACH ZONE OF APPLICABLE DOOR WIDTH
83.75	4	2		4	2	
87.75	4	2		4	2	
91.75	4	2		4	2	
95.75	4	2		4	2	
12.75 x 79.75	4	2		4	2	
83.75	4	2		4	2	
87.75	4	2		4	2	
91.75	4	2		4	2	
95.75	4	2		4	2	
19.00 x 79.75	4	3		4	2	
83.75	4	3		4	2	
87.75	4	3		4	2	
91.75	4	3		4	2	
95.75	4	3		4	2	
21.75 x 79.75	4	3		4	2	
83.75	4	3		4	2	
87.75	4	3		4	2	
91.75	5	3		4	2	
95.75	5	3		4	2	
27.75 x 79.75	5	3		4	2	
83.75	5	3		4	2	
87.75	5	3		4	2	
91.75	6	3		4	3	
95.75	6	3		4	3	
36.13 x 79.75	6	4		4	3	
83.75	6	4		4	3	
87.75	7	5		4	3	
91.75	7	5		4	3	
95.75	7	5		4	3	
36.75 x 79.75	6	4		4	3	
83.75	6	4		4	3	
87.75	7	5		4	3	
91.75	7	5		4	3	
95.75	7	5		4	3	

APPROVED ANCHOR TYPES:

1. 1/4" ELCO TAPCONS
2. 1/4" ELCO SS4 CRETE-FLEX MASONRY ANCHORS
3. #12 SCREWS (G5)
4. ENCIRCLED ANCHOR QUANTITIES IN TABLES 4 AND 7 PERTAIN TO THE EXAMPLE ANCHORAGE SOLUTION ON SHEET 8.

PRODUCT REVIEWED as complying with the Florida Building Code
Acceptance No. 15-0528.04
Expiration Date 10/18/17
By Ishaq I. Chanda
Miami Dade Product Control

Drawn By: J ROSOWSKI	Drawn Date: 04/04/12
Revision: NO CHANGES THIS SHEET	
Rev: E	Date: MAY 2015
Description: ANCHOR QUANTITY LOAD ZONE TABLES	
Title: ALUM. FRENCH DOOR & SIDE LITES, IMPACT	
Series/Model: FD-101	Scale: NTS
Sheet: 9 OF 10	Drawing No. 11005-1
Rev: E	

PGT®
1070 TECHNOLOGY DRIVE
N. VENICE, FL 34275
P.O. BOX 1529
NOKOMIS, FL 34274
CERT. OF AUTH. #29296

ANTHONY LYNN MILLER ENGINEER LICENSE No. 58705 STATE OF FLORIDA PROFESSIONAL ENGINEER
5/22/15
A. LYNN MILLER, P.E.
P.E.# 58705

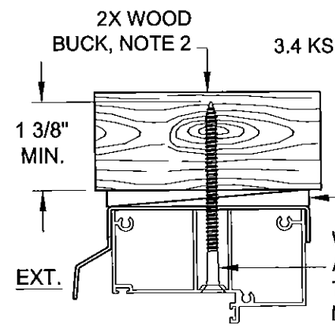

DOOR HEAD (WOOD)

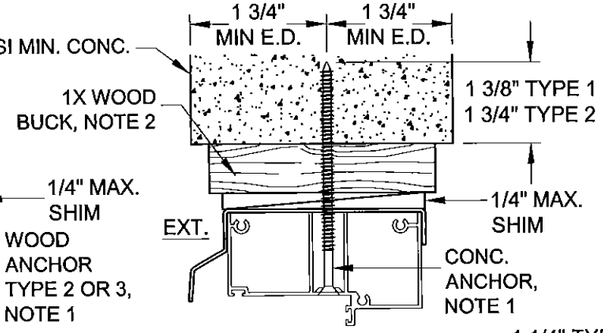

DOOR HEAD (CONC)

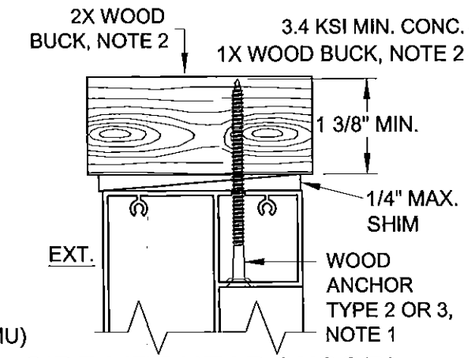

SIDE LITE HEAD (WOOD)

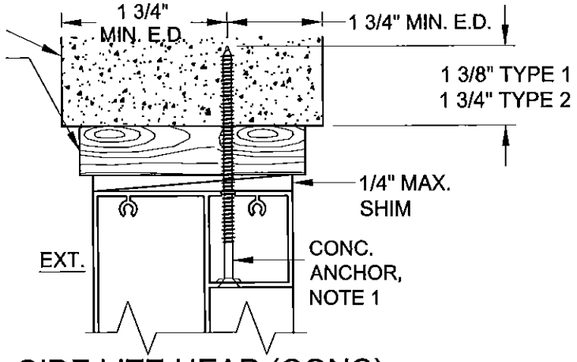

SIDE LITE HEAD (CONC)

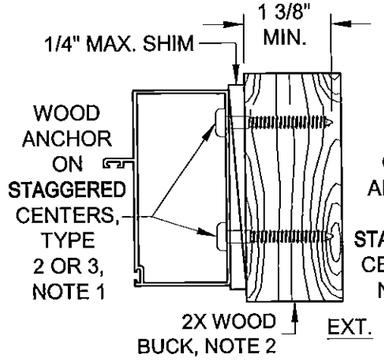

DOOR JAMB (WOOD)

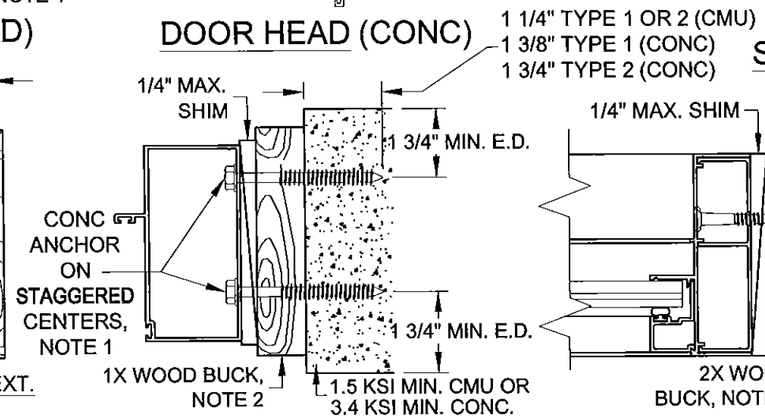

DOOR JAMB (CONC)

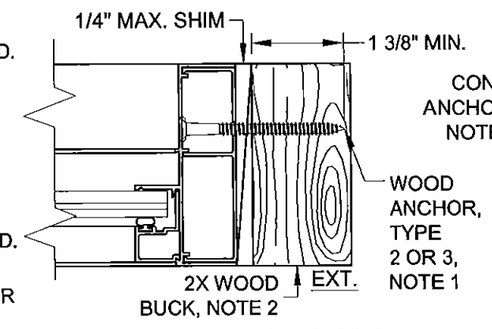

SIDE LITE JAMB (WOOD)

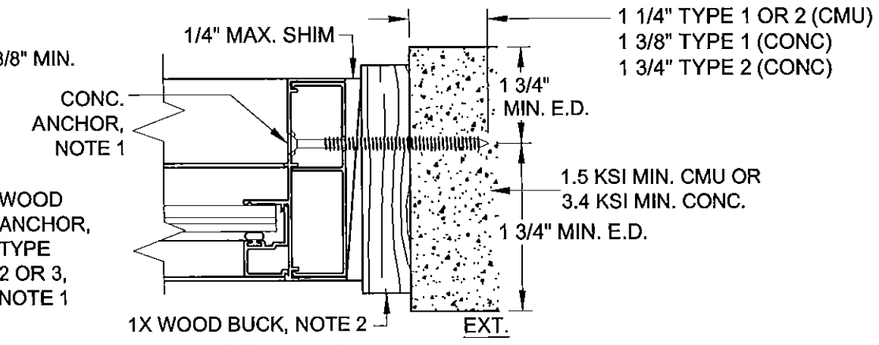

SIDE LITE JAMB (CONC)

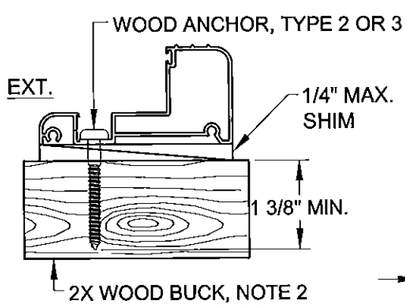

DOOR SILL (WOOD)

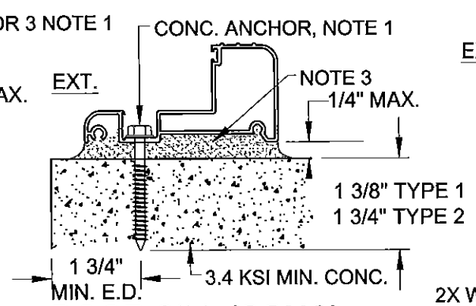

DOOR SILL (CONC)

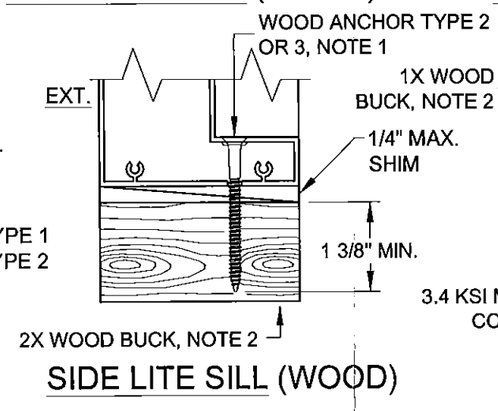

SIDE LITE SILL (WOOD)

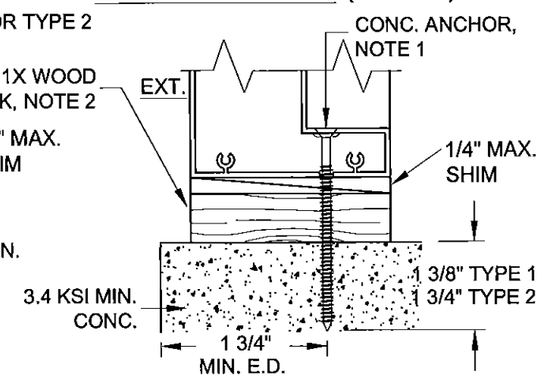

SIDE LITE SILL (CONC)

NOTES:

1. FOR CONCRETE INSTALLATIONS IN MIAMI-DADE COUNTY, USE ONLY MIAMI-DADE COUNTY APPROVED ELCO 1/4" TAPCONS EMBEDDED 1 3/8" MIN. (TYPE 1) OR 1/4" SS4 CRETE-FLEX EMBEDDED 1 3/4" MIN. (TYPE 2). THE MINIMUM DISTANCE FROM CENTER OF ANCHOR TO CONCRETE EDGE IS 1 3/4". FOR WOOD INSTALLATIONS USE #12 SCREWS, G5 (TYPE 3) OR ELCO 1/4" SS4 CRETE-FLEX ANCHORS EMBEDDED 1 3/8" MIN. (TYPE 2).
2. (E) WOOD BUCKS DEPICTED AS 1x ARE LESS THAN 1 1/2" THICK. 1x WOOD BUCKS ARE OPTIONAL IF UNIT IS INSTALLED DIRECTLY TO SOLID CONCRETE OR CMU. WOOD BUCKS DEPICTED AS 2x ARE 1 1/2" THICK OR GREATER. INSTALLATION TO THE SUBSTRATE OF WOOD BUCKS TO BE ENGINEERED BY OTHERS OR AS APPROVED BY THE AUTHORITY HAVING JURISDICTION (AHJ).
3. IF SILL IS TIGHT TO SUBSTRATE, GROUT OR OTHER MATERIAL IS NOT REQUIRED. IF USED, NON-SHRINK, NON-METALLIC GROUT (3400 PSI MIN.), (DONE BY OTHERS) MUST FULLY SUPPORT THE ENTIRE LENGTH OF THE SILL THAT IS NOT TIGHT TO THE SUBSTRATE, AND TRANSFER SHEAR LOAD TO SUBSTRATE. IF SUBSTRATE IS WOOD, 30# FELT PAPER OR MASTIC IS REQUIRED BETWEEN THE GROUT AND WOOD SUBSTRATE, OR AS APPROVED BY THE AUTHORITY HAVING JURISDICTION.

PRODUCT REVIEWED as complying with the Florida Building Code
Acceptance No. 15-0528.24
Expiration Date 10/18/17
By [signature]
Miami Dade Product Control

Drawn By: J ROSOWSKI
Drawn Date: 04/04/12
Revision: CORRECT OPTIONAL BUCK NOTE
Rev. Date: E MAY 2015
Description: ANCHORAGE DETAILS
Title: ALUM. FRENCH DOOR & SIDE LITES, IMPACT
Rev: E
Scale: NTS
Sheet: 10 OF 10
Drawing No. 11005-1
Series/Model: FD-101

PGT®
1070 TECHNOLOGY DRIVE
N. VENICE, FL 34275
P.O. BOX 1529
NOKOMIS, FL 34274
CERT. OF AUTH. #29296

ANTHONY LYNN MILLER LICENSE No. 58705 STATE OF FLORIDA PROFESSIONAL ENGINEER
5/22/15
A. LYNN MILLER, P.E.
P.E.# 58705