MIAMI-DADE COUNTY
DEPARTMENT OF REGULATORY AND ECONOMIC RESOURCES (RER)
BOARD AND CODE ADMINISTRATION DIVISION

MIAMI-DADE COUNTY
PRODUCT CONTROL SECTION
11805 SW 26 Street, Room 208
T (786) 315-2590 F (786) 315-2599
www.miamidade.gov/economy

NOTICE OF ACCEPTANCE (NOA)

PGT Industries, Inc.
1070 Technology Drive
North Venice, FL 34275

SCOPE:

This NOA is being issued under the applicable rules and regulations governing the use of construction materials. The documentation submitted has been reviewed and accepted by Miami-Dade County RER - Product Control Section to be used in Miami Dade County and other areas where allowed by the Authority Having Jurisdiction (AHJ).

This NOA shall not be valid after the expiration date stated below. The Miami–Dade County Product Control Section (In Miami–Dade County) and/or the AHJ (in areas other than Miami–Dade County) reserve the right to have this product or material tested for quality assurance purposes. If this product or material fails to perform in the accepted manner, the manufacturer will incur the expense of such testing and the AHJ may immediately revoke, modify, or suspend the use of such product or material within their jurisdiction. RER reserves the right to revoke this acceptance, if it is determined by Miami–Dade County Product Control Section that this product or material fails to meet the requirements of the applicable building code.

This product is approved as described herein, and has been designed to comply with the Florida Building Code, including the High Velocity Hurricane Zone.-

DESCRIPTION: Series "PW-701/620" Aluminum Fixed Window - N.I.

APPROVAL DOCUMENT: Drawing No. **MD-620.1**, titled "Fixed Window Installation Guidelines", sheets 1 through 9 of 9, dated 04/12/13, with revision A dated 05/20/15, prepared by manufacturer, signed and sealed by Anthony Lynn Miller, P.E., bearing the Miami-Dade County Product Control Section Revision stamp with the Notice of Acceptance number and expiration date by the Miami-Dade County Product Control Section.

MISSILE IMPACT RATING: None.

LABELING: Each unit shall bear a permanent label with the manufacturer's name or logo, city, state, model/series, and following statement: "Miami-Dade County Product Control Approved", unless otherwise noted herein.

RENEWAL of this NOA shall be considered after a renewal application has been filed and there has been no change in the applicable building code negatively affecting the performance of this product.

TERMINATION of this NOA will occur after the expiration date or if there has been a revision or change in the materials, use, and/or manufacture of the product or process. Misuse of this NOA as an endorsement of any product, for sales, advertising or any other purposes shall automatically terminate this NOA. Failure to comply with any section of this NOA shall be cause for termination and removal of NOA.

ADVERTISEMENT: The NOA number preceded by the words Miami-Dade County, Florida, and followed by the expiration date may be displayed in advertising literature. If any portion of the NOA is displayed, then it shall be done in its entirety.

INSPECTION: A copy of this entire NOA shall be provided to the user by the manufacturer or its distributors and shall be available for inspection at the job site at the request of the Building Official.

This NOA **revises NOA# 13-0502.04** and consists of this page 1 and evidence pages E-1 and E-2, as well as approval document mentioned above.

The submitted documentation was reviewed by **Manuel Perez, P.E.**

MIAMI-DADE COUNTY APPROVED

8/10/15

PGT Industries, Inc.

NOTICE OF ACCEPTANCE: EVIDENCE SUBMITTED

A. DRAWINGS

1. Manufacturer's die drawings and sections.
   (Submitted under previous NOA No. 13-0502.04)
2. Drawing No. **MD-620.1**, titled "Fixed Window Installation Guidelines", sheets 1 through 9 of 9, dated 04/12/13, with revision A dated 05/20/15, prepared by manufacturer, signed and sealed by Anthony Lynn Miller, P.E.

B. TESTS

1. Test reports on: 1) Air Infiltration Test, per FBC, TAS 202-94
   2) Uniform Static Air Pressure Test, Loading per FBC, TAS 202-94
   3) Water Resistance Test, per FBC, TAS 202-94
   4) Large Missile Impact Test per FBC, TAS 201-94
   5) Cyclic Wind Pressure Loading per FBC, TAS 203-94
   6) Forced Entry Test, per FBC 2411.3.2.1, and TAS 202-94

   along with marked-up drawings and installation diagram of an aluminum fixed window, prepared by Fenestration Testing Laboratory, Inc., Test Report No. **FTL-7212**, dated 03/21/13, signed and sealed by Marlin D. Brinson, P.E.
   (Submitted under previous NOA No. 11-1114.17)
2. Test reports on: 1) Air Infiltration Test, per FBC, TAS 202-94
   2) Uniform Static Air Pressure Test, Loading per FBC, TAS 202-94
   3) Water Resistance Test, per FBC, TAS 202-94

   along with marked-up drawings and installation diagram of an aluminum fixed window, prepared by Fenestration Testing Laboratory, Inc., Test Reports No. **FTL-3834** and **FTL-3847**, dated 07/30/03 and 07/31/03 respectively, all signed and sealed by Joseph C. Chan, P.E.
   (Submitted under NOA No. 03-1105.02)

C. CALCULATIONS

1. Anchor verification calculations and structural analysis, complying with **FBC-5th Edition (2014)**, dated 05/20/15, prepared by manufacturer, signed and sealed by Anthony Lynn Miller, P.E.
2. Glazing complies with **ASTM E1300-09**

D. QUALITY ASSURANCE

1. Miami-Dade Department of Regulatory and Economic Resources (RER).

Manuel Perez

Manuel Perez, P.E.
Product Control Examiner
NOA No. 15-0528.27
Expiration Date: February 19, 2019
Approval Date: August 20 2015

NOTICE OF ACCEPTANCE: EVIDENCE SUBMITTED

E. MATERIAL CERTIFICATIONS

1. TREMCO Part No. **TR-14271E** EPDM exterior glazing gasket complying with the following:
   a) ASTM C864 Specification for Dense Elastomeric Compression Seal Gaskets, Setting Blocks, and Spacers with Option II exceptions.
   b) ASTM D412 Standard Test Methods for Vulcanized Rubber and Thermoplastic Elastomers - Tension of 1600 PSI.
   c) ASTM D395B Test Methods for Rubber Property - Compression Set for 22 HRS 158°F.
   d) ASTM D 624 Test Method for Tear Strength of Conventional Vulcanized Rubber and Thermoplastic Elastomers of 143 lb./ in.

F. STATEMENTS

1. Statement letter of conformance, complying with **FBC-5th Edition (2014)**, dated May 20, 2015, issued by manufacturer, signed and sealed by Anthony Lynn Miller, P.E.
2. Statement letter of no financial interest, dated May 20, 2015, issued by manufacturer, signed and sealed by Anthony Lynn Miller, P.E.
3. Laboratory compliance letter for Test Report No. **FTL-7212**, dated 03/21/13, signed and sealed by Marlin D. Brinson, P.E.
   (Submitted under previous NOA No. 13-0502.04)
4. Laboratory compliance letter for Test Reports No. **FTL-3834** and **FTL-3847**, dated 07/30/03 and 07/31/03 respectively, all signed and sealed by Joseph C. Chan, P.E.
   (Submitted under NOA No. 03-1105.02)

G. OTHERS

1. Notice of Acceptance No. **13-0502.04**, issued to PGT Industries for their Series "PW-701/620" Aluminum Fixed Window - N.I." approved on 07/18/13 and expiring on 02/19/19.

Manuel Perez, P.E.
Product Control Examiner
NOA No. 15-0528.27
Expiration Date: February 19, 2019
Approval Date: August 20 2015

GENERAL NOTES: SERIES 620
NON-IMPACT-RESISTANT FIXED WINDOW

1) THIS PRODUCT HAS BEEN DESIGNED & TESTED TO COMPLY WITH THE REQUIREMENTS OF THE FLORIDA BUILDING CODE, INCLUDING THE HIGH VELOCITY HURRICANE ZONE (HVHZ).

2) SHUTTERS ARE REQUIRED WHEN USED IN WIND-BORNE DEBRIS REGIONS.

3) FOR MASONRY APPLICATIONS IN MIAMI-DADE COUNTY, USE ONLY MIAMI-DADE COUNTY APPROVED MASONRY ANCHORS. MATERIALS USED FOR ANCHOR EVALUATIONS WERE SOUTHERN PINE, ASTM C90 CONCRETE MASONRY UNITS AND CONCRETE WITH MIN. KSI PER ANCHOR TYPE.

4) ALL WOOD BUCKS LESS THAN 1-1/2" THICK ARE TO BE CONSIDERED 1X INSTALLATIONS. 1X WOOD BUCKS ARE OPTIONAL IF UNIT IS INSTALLED DIRECTLY TO SUBSTRATE. WOOD BUCKS DEPICTED AS 2X ARE 1-1/2" THICK OR GREATER. 1X AND 2X BUCKS (WHEN USED) SHALL BE DESIGNED TO PROPERLY TRANSFER LOADS TO THE STRUCTURE. WOOD BUCK DESIGN AND INSTALLATION IS THE RESPONSIBILITY OF THE ENGINEER, (EOR) OR ARCHITECT OF RECORD, (AOR).

5) ANCHOR EMBEDMENT TO BASE MATERIAL SHALL BE BEYOND WALL DRESSING OR STUCCO. USE ANCHORS OF SUFFICIENT EMBEDMENT. NARROW JOINT SEALANT IS USED ON ALL FOUR CORNERS OF THE FRAME. INSTALLATION ANCHORS SHOULD BE SEALED. OVERALL SEALING/FLASHING STRATEGY FOR WATER RESISTANCE OF INSTALLATION SHALL BE DONE BY OTHERS AND IS BEYOND THE SCOPE OF THESE INSTRUCTIONS.

6) MAX. 1/4" SHIMS ARE REQUIRED AT EACH ANCHOR LOCATION WHERE THE PRODUCT IS NOT FLUSH TO THE SUBSTRATE. USE SHIMS CAPABLE OF TRANSFERRING APPLIED LOADS. WOOD BUCKS, BY OTHERS, MUST BE SUFFICIENTLY ANCHORED TO RESIST LOADS IMPOSED ON THEM BY THE WINDOW.

7) DESIGN PRESSURES:
A. NEGATIVE DESIGN LOADS BASED ON STRUCTURAL TEST PRESSURE, FRAME ANALYSIS AND GLASS PER ASTM E1300. (A)
B. POSITIVE DESIGN LOADS BASED ON WATER TEST PRESSURE, STRUCTURAL TEST PRESSURE, FRAME ANALYSIS AND GLASS PER ASTM E1300.

8) THE ANCHORAGE METHODS SHOWN HAVE BEEN DESIGNED TO RESIST THE WINDLOADS CORRESPONDING TO THE REQUIRED DESIGN PRESSURE. THE 33-1/3% STRESS INCREASE HAS NOT BEEN USED IN THE DESIGN OF THIS PRODUCT. THE 1.6 LOAD DURATION FACTOR WAS USED FOR THE EVALUATION OF ANCHORS INTO WOOD. ANCHORS THAT COME INTO CONTACT WITH OTHER DISSIMILAR MATERIALS SHALL MEET THE REQUIREMENTS OF THE FLORIDA BUILDING CODE FOR CORROSION RESISTANCE.

9) REFERENCES: TEST REPORTS FTL-3834, 3847 & 7212; ELCO ULTRACON NOA; ELCO CRETEFLEX NOA; ANSI/AF&PA NDS FOR WOOD CONSTRUCTION AND ALUMINUM DESIGN MANUAL. (A)

10) THE 620 SERIES MAY ALSO BE REFERRED AS THE 701 SERIES.

DESIGN PRESSURE RATING	IMPACT RATING
VARIES, SEE SHEETS 2-4	NOT RATED FOR IMPACT RESISTANCE

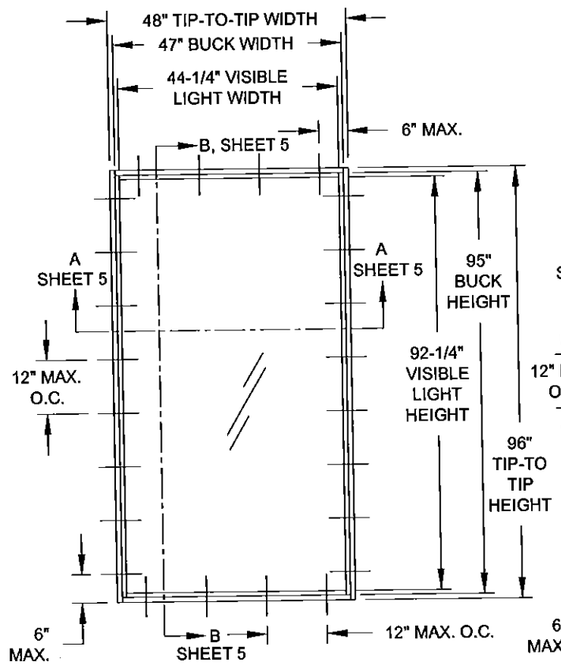

TYP. FLANGED FRAME ELEVATION (TESTED UNIT)

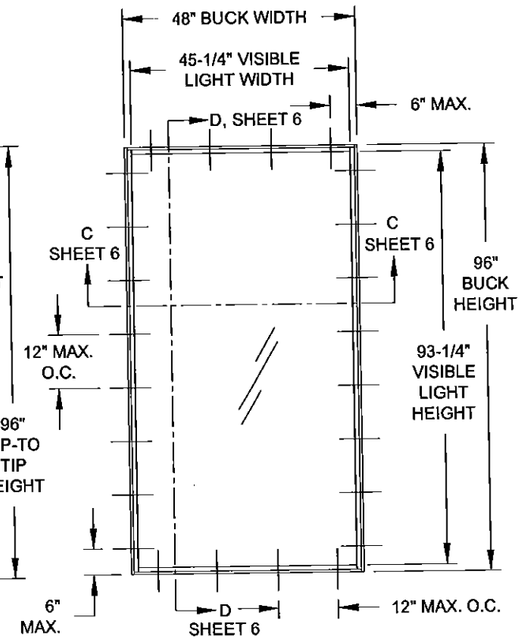

TYP. EQUAL-LEG FRAME ELEVATION (TESTED UNIT)

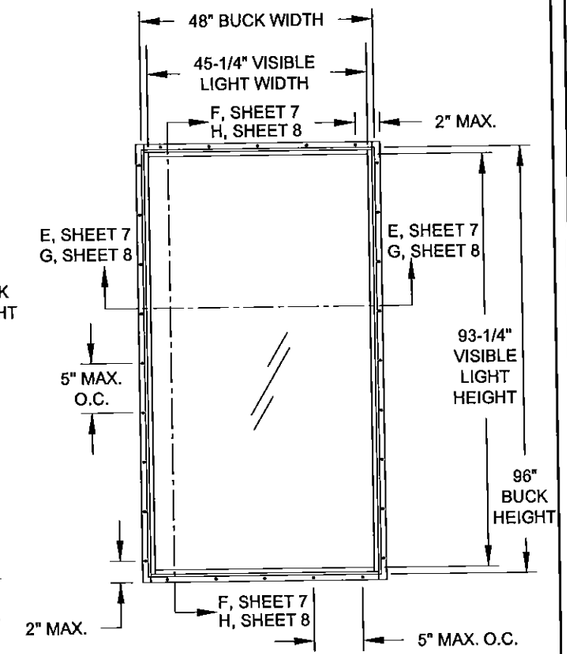

TYP. FIN FRAME ELEVATION (TESTED UNIT)

GUIDE TO SHEETS:

GENERAL NOTES	1
ELEVATIONS	1
GLAZING DETAILS	2-4
DESIGN PRESSURES	2-4
INSTALLATION, FLANGE	5
INSTALLATION, EQUAL-LEG	6
INSTALLATION, INT. FIN A	7
INSTALLATION, INT. FIN B	8
CORNER ASSEMBLY	9
EXTRUSION PROFILES	9
PARTS LIST	9

FIGURE 1:

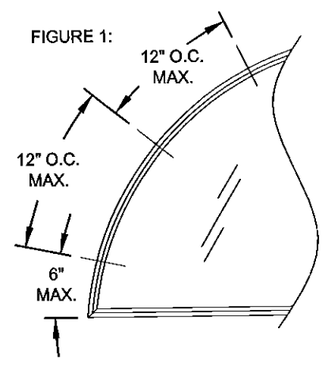

TABLE 1:

Type #	Description	Sheet #
1	3/16" Tempered	2
2	1/4" Tempered	3
3	13/16" IG (3/16" Tempered - 7/16" Air - 3/16" Tempered)	4

SHAPES AS SHOWN BELOW OR SIMILAR, MAY BE USED BY INSCRIBING THE SHAPE IN A BLOCK AND OBTAINING DESIGN PRESSURES FOR THAT BLOCK SIZE FROM THE TABLES ON SHEETS 2-5. ANCHOR SPACING TO BE 6" MAX. FROM CORNERS AND 12" O.C. MAX. FOR ALL CURVED FRAME MEMBERS, SEE FIGURE 1, THIS SHEET.

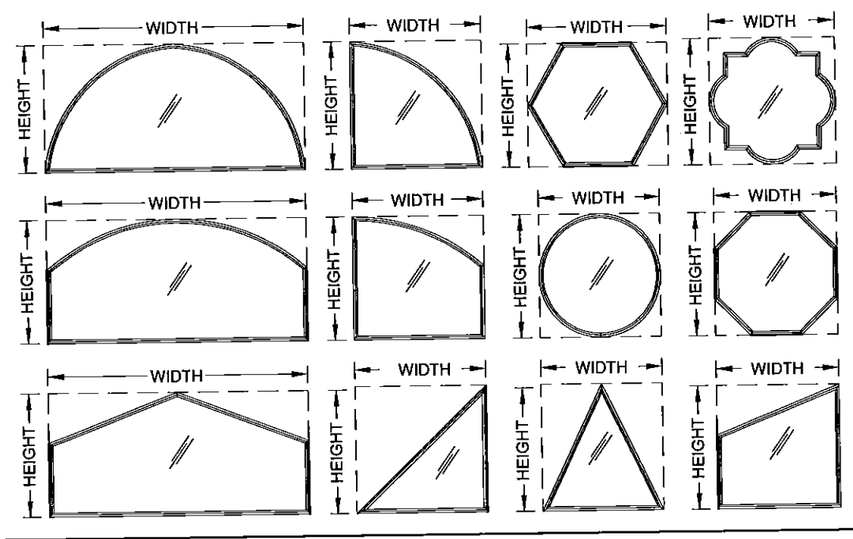

PRODUCT REVISED
as complying with the Florida Building Code
Acceptance No. 15-0528.27
Expiration Date Feb. 19, 2019
By Manuel Sura
Miami-Dade Product Control

Rev.	Description
Rev. A	5TH EDITION FBC UPDATE
Rev. B	
Rev. C	

1070 TECHNOLOGY DRIVE
N. VENICE, FL 34275
P.O. BOX 1529
NOKOMIS, FL 34274
(941)-480-1600
CERT. OF AUTH. #29296

Series	Desc.	Scale	Sheet	DWG No.	Rev.
PW-620	GENERAL NOTES & ELEVATION	NTS	1 OF 9	MD-620.1	A

Title: FIXED WINDOW INSTALLATION GUIDELINES
Drawn By: J ROSOWSKI
Date: 4/12/13

ANTHONY LYNN MILLER
LICENSE
No. 58705
STATE OF FLORIDA
PROFESSIONAL ENGINEER
5/20/15
A. LYNN MILLER, P.E.
P.E.# 58705

TABLE 2:

Window Design Pressure (+/-, psf) for Glass Type 1

Short Side (in) \ Long Side (in)	67-7/8	72	76	80	84	88	92	96	100	104	109-1/2	112	116	120	124	128	132	136	140	144
30	+100/-150	+100/-150	+100/-149.5	+100/-147.7	+100/-146.1	+100/-144.7	+100/-141.9	+100/-138.4	+100/-135.4	+100/-132.8	+100/-129.6	+100/-128.6	+100/-126.8	+100/-125.4	+100/-124	+100/-122.6	+100/-121.5	+100/-120.5	+100/-119.6	+100/-118.8
32	+100/-147.2	+100/-144.6	+100/-142.5	+100/-140.6	+100/-137.5	+100/-131.7	+100/-127.1	+100/-123.4	+100/-120.3	+100/-117.9	+100/-114.8	+100/-113.8	+100/-112	+100/-110.4	+100/-108.9	+100/-107.6	+100/-106.5	+100/-105.6	+100/-104.5	+100/-103.6
34	+100/-141.3	+100/-138.6	+100/-136.4	+100/-134.5	+100/-128.1	+100/-122.3	+100/-117.7	+100/-113.9	+100/-110.1	+100/-106.8	+100/-103.4	+100/-102.2	+100/-100.4	+/-99	+/-97.4	+/-96.2	+/-95	+/-93.9	+/-93	+/-92
36	+100/-136.1	+100/-133.3	+100/-131	+100/-129	+100/-123.4	+100/-117.3	+100/-111.8	+100/-106.4	+100/-102.6	+/-99.7	+/-96	+/-94.4	+/-92.2	+/-90.1	+/-88	+/-86.6	+/-85.2	+/-84	+/-83	+/-81.8
38	+100/-131.6	+100/-128.7	+100/-126.3	+100/-124.2	+100/-121.7	+100/-115.1	+100/-107.8	+100/-102.5	+/-98.4	+/-94.5	+/-90	+/-87.9	+/-85.2	+/-83	+/-81.4	+/-79.8	+/-78.4	+/-77.2	+/-76.2	+/-75
40	+100/-127.6	+100/-124.6	+100/-122.1	+100/-120	+100/-118.1	+100/-113.9	+100/-106.8	+100/-100.8	+/-96.1	+/-91.6	+/-85.4	+/-83.4	+/-81.1	+/-78.9	+/-76.9	+/-75	+/-73.4	+/-71.8	+/-70.3	+/-68.6
42	+100/-124.1	+100/-121	+100/-118.4	+100/-116.2	+100/-114.3	+100/-112.6	+100/-106.2	+100/-100.6	+/-95.3	+/-89.9	+/-83.4	+/-81.4	+/-78.7	+/-76.1	+/-73.5	+/-71.2	+/-69	+/-67	+/-65.2	+/-63.4
44	+100/-121	+100/-117.8	+100/-115.2	+100/-112.9	+100/-110.9	+100/-109.1	+100/-106.8	+100/-100.7	+/-95.4	+/-89.9	+/-82.6	+/-80.8	+/-77.6	+/-74.4	+/-71.6	+/-68.5	+/-65.9	+/-63.4	+/-61.8	+/-60.6
46	+100/-118.4	+100/-115	+100/-112.2	+100/-109.8	+100/-107.8	+100/-106	+100/-104.3	+100/-101.1	+/-95.7	+/-90.3	+/-82.8	+/-80.6	+/-77.4	+/-74	+/-70.3	+/-67.2	+/-63.9	+/-61.7	+/-60.4	+/-58.8
48	+100/-116	+100/-112.5	+100/-109.6	+100/-107.1	+100/-105	+100/-103.1	+100/-101.5	+/-100	+/-96.3	+/-90.8	+/-83.2	+/-81.1	+/-77.5	+/-74	+/-70.6	+/-66.6	+/-63	+/-61.4	+/-59.6	+/-57.8
50	+100/-114	+100/-110.3	+100/-107.3	+100/-104.7	+100/-102.5	+100/-100.6	+/-98.9	+/-97.4	+/-96	+/-91.4	+/-83.8	+/-81.6	+/-78.2	+/-74.6	+/-70.9	+/-67.3	+/-63.2	+/-61	+/-59.4	
52	+100/-112.2	+100/-108.4	+100/-105.2	+100/-102.6	+100/-100.3	+/-98.3	+/-96.5	+/-94.9	+/-93.6	+/-92	+/-84.6	+/-82	+/-78.6	+/-75.3	+/-71.6	+/-67.8	+/-64	+/-61.4		
54	+100/-110.7	+100/-106.7	+100/-103.4	+100/-100.6	+/-98.2	+/-96.2	+/-94.4	+/-92.8	+/-91.3	+/-90	+/-85.2	+/-82.4	+/-78.8	+/-75.8	+/-72.2	+/-68.6	+/-64.8			
56	+100/-109.4	+100/-105.2	+100/-101.8	+/-98.9	+/-96.4	+/-94.3	+/-92.4	+/-90.8	+/-89.3	+/-88	+/-85.4	+/-82.7	+/-79.2	+/-76	+/-72.8	+/-69.4				
58	+100/-108.4	+100/-103.9	+100/-100.4	+/-97.4	+/-94.8	+/-92.6	+/-90.6	+/-88.9	+/-87.4	+/-86.1	+/-84.2	+/-82.3	+/-79.3	+/-76	+/-72.8					
60	+100/-107.5	+100/-102.9	+/-99.1	+/-96	+/-93.3	+/-91	+/-89	+/-87.3	+/-85.7	+/-84.3	+/-82.6	+/-81.4	+/-78.7	+/-76						
62	+100/-106.9	+100/-102	+/-98.1	+/-94.8	+/-92	+/-89.6	+/-87.6	+/-85.8	+/-84.2	+/-82.7	+/-81	+/-80.3	+/-77.5							
64	+100/-106.4	+100/-101.3	+/-97.2	+/-93.8	+/-90.9	+/-88.4	+/-86.3	+/-84.4	+/-82.7	+/-81.3	+/-79.5	+/-78.8								
66	+100/-106.1	+100/-100.7	+/-96.4	+/-92.8	+/-89.8	+/-87.3	+/-85.1	+/-83.1	+/-81.4	+/-79.9										
67-7/8	+100/-106.1	+100/-100.3	+/-95.8	+/-92.1	+/-89	+/-86.3	+/-84	+/-82	+/-80.3	+/-78.7										

NOTES:
1) BUCK DIMENSIONS SHOWN. FOR FLANGED WINDOWS, SUBTRACT 1" FROM THE TIP-TO-TIP DIMENSION TO DETERMINE THE BUCK DIMENSION.
2) FOR SIZES NOT SHOWN, ROUND UP TO THE NEXT AVAILABLE SHORT OR LONG DIMENSION.
3) FOR ARCHITECTURAL WINDOWS, FIND THE SMALLEST WINDOW SIZE IN THE TABLE ABOVE WHICH THE OVERALL DIMENSIONS COMPLETELY FIT WITHIN.

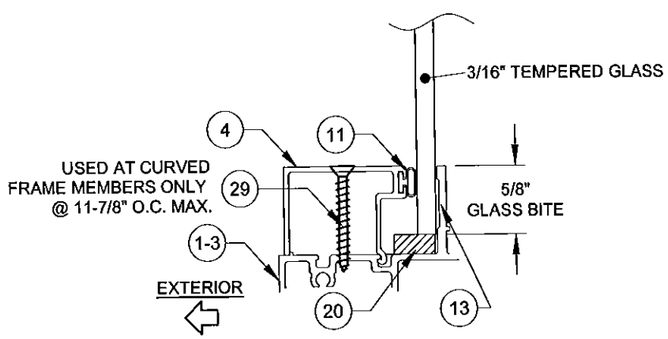

GLASS TYPE 1

TABLE DIMENSIONS MAY BE ORIENTED VERTICALLY OR HORIZONTALLY AS SHOWN.

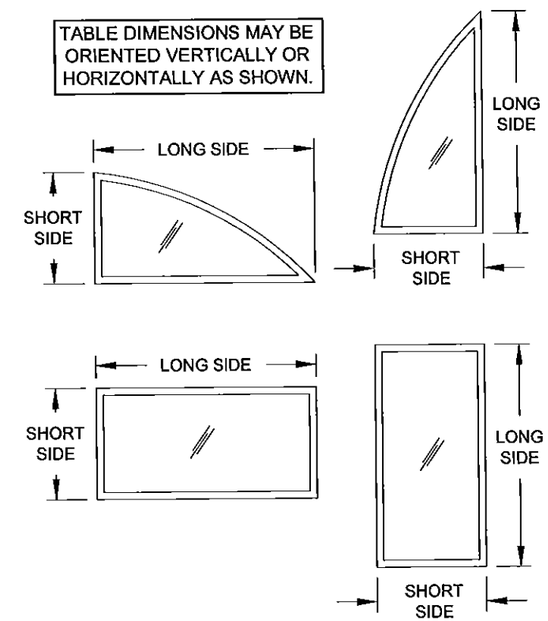

PRODUCT REVISED
as complying with the Florida Building Code
Acceptance No 15-0528.27
Expiration Date Feb. 19, 2019
By Manuel Perez
Miami Dade Product Control

Rev A	NO CHANGE THIS SHEET
Rev B	
Rev C	

1070 TECHNOLOGY DRIVE
N. VENICE, FL 34275
P.O. BOX 1529
NOKOMIS, FL 34274
(941)-480-1600
CERT. OF AUTH. #29296

Title	Date	Rev.
FIXED WINDOW INSTALLATION GUIDELINES	4/12/13	A
Desc.	Drawn By	
DESIGN PRESSURE TABLES 1	J ROSOWSKI	
Series	Scale	Sheet	DWG No.	
PW-620	NTS	2 OF 9	MD-620.1	

ANTHONY LYNN MILLER
LICENSE
No. 58705
STATE OF FLORIDA
PROFESSIONAL ENGINEER
5/20/15

A. LYNN MILLER, P.E.
P.E.# 58705

TABLE 3:

Window Design Pressure (+/-, psf) for Glass Type 2

Short Side (in) \ Long Side (in)	67-7/8	72	76	80	84	88	92	96	100	104	109-1/2	112	116	120	124	128	132	136	140	144
30	+100/-150	+100/-150	+100/-149.5	+100/-147.7	+100/-146.1	+100/-144.7	+100/-143.4	+100/-142.2	+100/-141.2	+100/-140.2	+100/-139	+100/-138.6	+100/-137.8	+100/-137.1	+100/-136.5	+100/-135.9	+100/-135.4	+100/-134.9	+100/-134.4	+100/-133.9
32	+100/-147.2	+100/-144.6	+100/-142.5	+100/-140.6	+100/-139	+100/-137.5	+100/-136.2	+100/-135	+100/-133.9	+100/-133	+100/-131.7	+100/-131.3	+100/-130.5	+100/-129.8	+100/-129.2	+100/-128.6	+100/-128	+100/-127.5	+100/-127	+100/-126.5
34	+100/-141.3	+100/-138.6	+100/-136.4	+100/-134.5	+100/-132.7	+100/-131.2	+100/-129.9	+100/-128.7	+100/-127.6	+100/-126.6	+100/-125.3	+100/-124.8	+100/-124.1	+100/-123.4	+100/-122.7	+100/-122.1	+100/-121.5	+100/-121	+100/-120.5	+100/-120
36	+100/-136.1	+100/-133.3	+100/-131	+100/-129	+100/-127.3	+100/-125.7	+100/-124.3	+100/-123.1	+100/-122	+100/-120.9	+100/-119.7	+100/-119.1	+100/-118.4	+100/-117.6	+100/-117	+100/-116.4	+100/-115.8	+100/-115.3	+100/-114.8	+100/-114.2
38	+100/-131.6	+100/-128.7	+100/-126.3	+100/-124.2	+100/-122.4	+100/-120.8	+100/-119.4	+100/-118.1	+100/-117	+100/-115.9	+100/-114.6	+100/-114.1	+100/-113.3	+100/-112.6	+100/-111.9	+100/-111.3	+100/-110.7	+100/-110.1	+100/-108.8	+100/-107.4
40	+100/-127.6	+100/-124.6	+100/-122.1	+100/-120	+100/-118.1	+100/-116.5	+100/-115	+100/-113.7	+100/-112.5	+100/-111.4	+100/-110.1	+100/-109.6	+100/-108.8	+100/-107.7	+100/-105.5	+100/-103.4	+100/-102	+100/-100.6	+/-99.4	+/-98
42	+100/-124.1	+100/-121	+100/-118.4	+100/-116.2	+100/-114.3	+100/-112.6	+100/-111.1	+100/-109.7	+100/-108.5	+100/-107.4	+100/-106.1	+100/-105.5	+100/-103.5	+100/-100.9	+/-98.7	+/-96.6	+/-94.9	+/-93.2	+/-91.6	+/-90
44	+100/-121	+100/-117.8	+100/-115.2	+100/-112.9	+100/-110.9	+100/-109.1	+100/-107.5	+100/-106.1	+100/-104.9	+100/-103.8	+100/-102.4	+100/-101.8	+/-99.2	+/-96.1	+/-93.6	+/-90.9	+/-88.7	+/-86.5	+/-84.6	+/-83
46	+100/-118.4	+100/-115	+100/-112.2	+100/-109.8	+100/-107.8	+100/-106	+100/-104.3	+100/-102.9	+100/-101.6	+100/-100.5	+/-99.1	+/-98.5	+/-96	+/-92.5	+/-89.1	+/-86.3	+/-83.7	+/-81.8	+/-80.2	+/-78.6
48	+100/-116	+100/-112.5	+100/-109.6	+100/-107.1	+100/-105	+100/-103.1	+100/-101.5	+/-100	+/-98.7	+/-97.5	+/-96.1	+/-95.5	+/-94	+/-89.8	+/-86.2	+/-83	+/-80.8	+/-79	+/-77.1	+/-75
50	+100/-114	+100/-110.3	+100/-107.3	+100/-104.7	+100/-102.5	+100/-100.6	+/-98.9	+/-97.4	+/-96	+/-94.8	+/-93.3	+/-92.7	+/-91.8	+/-88.7	+/-84	+/-81.6	+/-79.1	+/-76.7	+/-74.7	
52	+100/-112.2	+100/-108.4	+100/-105.2	+100/-102.6	+100/-100.3	+/-98.3	+/-96.5	+/-94.9	+/-93.6	+/-92.3	+/-90.8	+/-90.2	+/-89.2	+/-88.4	+/-83.8	+/-80.6	+/-78.2	+/-75.6		
54	+100/-110.7	+100/-106.7	+100/-103.4	+100/-100.6	+/-98.2	+/-96.2	+/-94.4	+/-92.8	+/-91.3	+/-90	+/-88.5	+/-87.8	+/-86.9	+/-86	+/-84.1	+/-80.8	+/-77.6			
56	+100/-109.4	+100/-105.2	+100/-101.8	+/-98.9	+/-96.4	+/-94.3	+/-92.4	+/-90.8	+/-89.3	+/-88	+/-86.4	+/-85.7	+/-84.7	+/-83.9	+/-83	+/-81.2				
58	+100/-108.4	+100/-103.9	+100/-100.4	+/-97.4	+/-94.8	+/-92.6	+/-90.6	+/-88.9	+/-87.4	+/-86.1	+/-84.4	+/-83.8	+/-82.8	+/-81.8	+/-81					
60	+100/-107.5	+100/-102.9	+/-99.1	+/-96	+/-93.3	+/-91	+/-89	+/-87.3	+/-85.7	+/-84.3	+/-82.6	+/-82	+/-80.9	+/-80						
62	+100/-106.9	+100/-102	+/-98.1	+/-94.8	+/-92	+/-89.6	+/-87.6	+/-85.8	+/-84.2	+/-82.7	+/-81	+/-80.3	+/-79.2							
64	+100/-106.4	+100/-101.3	+/-97.2	+/-93.8	+/-90.9	+/-88.4	+/-86.3	+/-84.4	+/-82.7	+/-81.3	+/-79.5	+/-78.8								
66	+100/-106.1	+100/-100.7	+/-96.4	+/-92.8	+/-89.8	+/-87.3	+/-85.1	+/-83.1	+/-81.4	+/-79.9										
67-7/8	+100/-106.1	+100/-100.3	+/-95.8	+/-92.1	+/-89	+/-86.3	+/-84	+/-82	+/-80.3	+/-78.7										

NOTES:
1) BUCK DIMENSIONS SHOWN. FOR FLANGED WINDOWS, SUBTRACT 1" FROM THE TIP-TO-TIP DIMENSION TO DETERMINE THE BUCK DIMENSION.
2) FOR SIZES NOT SHOWN, ROUND UP TO THE NEXT AVAILABLE SHORT OR LONG DIMENSION.
3) FOR ARCHITECTURAL WINDOWS, FIND THE SMALLEST WINDOW SIZE IN THE TABLE ABOVE WHICH THE OVERALL DIMENSIONS COMPLETELY FIT WITHIN.

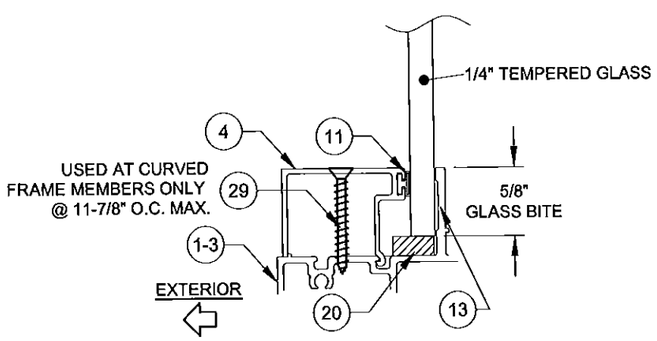

GLASS TYPE 2

TABLE DIMENSIONS MAY BE ORIENTED VERTICALLY OR HORIZONTALLY AS SHOWN.

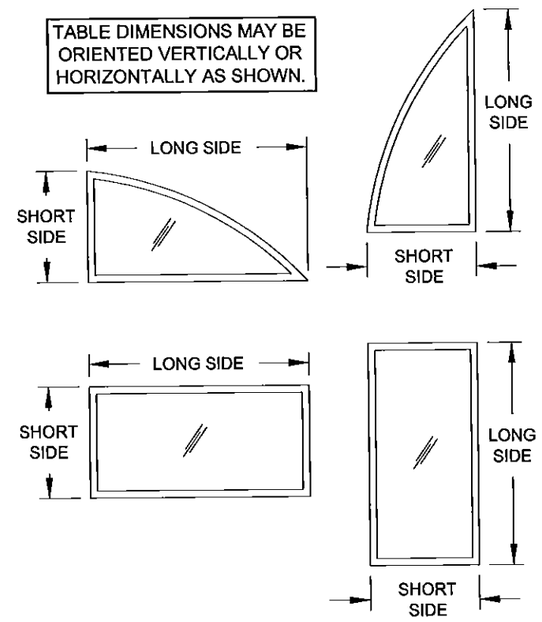

PRODUCT REVISED
as complying with the Florida Building Code
Acceptance No 15-0528.27
Expiration Date Feb. 19, 2019
By Manuel Perez
Miami-Dade Product Control

Rev	
Rev A	NO CHANGE THIS SHEET
Rev B	
Rev C	

1070 TECHNOLOGY DRIVE
N. VENICE, FL 34275
P.O. BOX 1529
NOKOMIS, FL 34274
(941)-480-1600
CERT. OF AUTH. #29296

Series	Desc.	Scale	Sheet	DWG No.	Rev.
PW-620	NTS	3 OF 9	MD-620.1	A	

Title	Date	Drawn By
FIXED WINDOW INSTALLATION GUIDELINES	4/12/13	J ROSOWSKI
DESIGN PRESSURE TABLES 2		

ANTHONY LYNN MILLER
LICENSE
No. 58705
STATE OF FLORIDA
PROFESSIONAL ENGINEER
5/20/15

A. LYNN MILLER, P.E.
P.E.# 58705

TABLE 4:

Window Design Pressure (+/-, psf) for Glass Type 3

Short Side (in)	Long Side (in) 67-7/8	72	76	80	84	88	92	96	100	104	109-1/2	112	116	120	124	128	132	136	140	144
30	+100/-150	+100/-150	+100/-149.5	+100/-147.7	+100/-146.1	+100/-144.7	+100/-143.4	+100/-142.2	+100/-141.2	+100/-140.2	+100/-139	+100/-138.6	+100/-137.8	+100/-137.1	+100/-136.5	+100/-135.9	+100/-135.4	+100/-134.9	+100/-134.4	+100/-133.9
32	+100/-147.2	+100/-144.6	+100/-142.5	+100/-140.6	+100/-139	+100/-137.5	+100/-136.2	+100/-135	+100/-133.9	+100/-133	+100/-131.7	+100/-131.3	+100/-130.5	+100/-129.8	+100/-129.2	+100/-128.6	+100/-128	+100/-127.5	+100/-127	+100/-126.5
34	+100/-141.3	+100/-138.6	+100/-136.4	+100/-134.5	+100/-132.7	+100/-131.2	+100/-129.9	+100/-128.7	+100/-127.6	+100/-126.6	+100/-125.3	+100/-124.8	+100/-124.1	+100/-123.4	+100/-122.7	+100/-122.1	+100/-121.5	+100/-121	+100/-120.5	+100/-120
36	+100/-136.1	+100/-133.3	+100/-131	+100/-129	+100/-127.3	+100/-125.7	+100/-124.3	+100/-123.1	+100/-122	+100/-120.9	+100/-119.7	+100/-119.1	+100/-118.4	+100/-117.6	+100/-117	+100/-116.4	+100/-115.8	+100/-115.3	+100/-114.8	+100/-114.2
38	+100/-131.6	+100/-128.7	+100/-126.3	+100/-124.2	+100/-122.4	+100/-120.8	+100/-119.4	+100/-118.1	+100/-117	+100/-115.9	+100/-114.6	+100/-114.1	+100/-113.3	+100/-112.6	+100/-111.9	+100/-111.3	+100/-110.7	+100/-110.1	+100/-109.6	+100/-109.1
40	+100/-127.6	+100/-124.6	+100/-122.1	+100/-120	+100/-118.1	+100/-116.5	+100/-115	+100/-113.7	+100/-112.5	+100/-111.4	+100/-110.1	+100/-109.6	+100/-108.8	+100/-108	+100/-107.3	+100/-106.7	+100/-106.1	+100/-105.5	+100/-105	+100/-104.5
42	+100/-124.1	+100/-121	+100/-118.4	+100/-116.2	+100/-114.3	+100/-112.6	+100/-111.1	+100/-109.7	+100/-108.5	+100/-107.4	+100/-106.1	+100/-105.5	+100/-104.7	+100/-103.9	+100/-103.2	+100/-102.5	+100/-101.9	+100/-101.4	+100/-100.8	+100/-100.3
44	+100/-121	+100/-117.8	+100/-115.2	+100/-112.9	+100/-110.9	+100/-109.1	+100/-107.5	+100/-106.1	+100/-104.9	+100/-103.8	+100/-102.4	+100/-101.8	+100/-101	+100/-100.2	+/-99.5	+/-98.8	+/-98.2	+/-97.6	+/-97.1	+/-96.5
46	+100/-118.4	+100/-115	+100/-112.2	+100/-109.8	+100/-107.8	+100/-106	+100/-104.3	+100/-102.9	+100/-101.6	+100/-100.5	+/-99.1	+/-98.5	+/-97.6	+/-96.8	+/-96.1	+/-95.4	+/-94.8	+/-94.2	+/-93.6	+/-93.1
48	+100/-116	+100/-112.5	+100/-109.6	+100/-107.1	+100/-105	+100/-103.1	+100/-101.5	+/-100	+/-98.7	+/-97.5	+/-96.1	+/-95.5	+/-94.6	+/-93.8	+/-93	+/-92.3	+/-91.7	+/-91.1	+/-90.5	+/-89.9
50	+100/-114	+100/-110.3	+100/-107.3	+100/-104.7	+100/-102.5	+100/-100.6	+/-98.9	+/-97.4	+/-96	+/-94.8	+/-93.3	+/-92.7	+/-91.8	+/-90.9	+/-90.2	+/-89.5	+/-88.8	+/-88.2	+/-87.7	
52	+100/-112.2	+100/-108.4	+100/-105.2	+100/-102.6	+100/-100.3	+/-98.3	+/-96.5	+/-94.9	+/-93.6	+/-92.3	+/-90.8	+/-90.2	+/-89.2	+/-88.4	+/-87.6	+/-86.9	+/-86.2	+/-85.6		
54	+100/-110.7	+100/-106.7	+100/-103.4	+100/-100.6	+/-98.2	+/-96.2	+/-94.4	+/-92.8	+/-91.3	+/-90	+/-88.5	+/-87.8	+/-86.9	+/-86	+/-85.2	+/-84.5	+/-83.8			
56	+100/-109.4	+100/-105.2	+100/-101.8	+/-98.9	+/-96.4	+/-94.3	+/-92.4	+/-90.8	+/-89.3	+/-88	+/-86.4	+/-85.7	+/-84.7	+/-83.9	+/-83	+/-82.3				
58	+100/-108.4	+100/-103.9	+100/-100.4	+/-97.4	+/-94.8	+/-92.6	+/-90.6	+/-88.9	+/-87.4	+/-86.1	+/-84.4	+/-83.8	+/-82.8	+/-81.8	+/-81					
60	+100/-107.5	+100/-102.9	+/-99.1	+/-96	+/-93.3	+/-91	+/-89	+/-87.3	+/-85.7	+/-84.3	+/-82.6	+/-82	+/-80.9	+/-80						
62	+100/-106.9	+100/-102	+/-98.1	+/-94.8	+/-92	+/-89.6	+/-87.6	+/-85.8	+/-84.2	+/-82.7	+/-81	+/-80.3	+/-79.2							
64	+100/-106.4	+100/-101.3	+/-97.2	+/-93.8	+/-90.9	+/-88.4	+/-86.3	+/-84.4	+/-82.7	+/-81.3	+/-79.5	+/-78.8								
66	+100/-106.1	+100/-100.7	+/-96.4	+/-92.8	+/-89.8	+/-87.3	+/-85.1	+/-83.1	+/-81.4	+/-79.9										
67-7/8	+100/-106.1	+100/-100.3	+/-95.8	+/-92.1	+/-89	+/-86.3	+/-84	+/-82	+/-80.3	+/-78.7										

NOTES:
1) BUCK DIMENSIONS SHOWN. FOR FLANGED WINDOWS, SUBTRACT 1" FROM THE TIP-TO-TIP DIMENSION TO DETERMINE THE BUCK DIMENSION.
2) FOR SIZES NOT SHOWN, ROUND UP TO THE NEXT AVAILABLE SHORT OR LONG DIMENSION.
3) FOR ARCHITECTURAL WINDOWS, FIND THE SMALLEST WINDOW SIZE IN THE TABLE ABOVE WHICH THE OVERALL DIMENSIONS COMPLETELY FIT WITHIN.

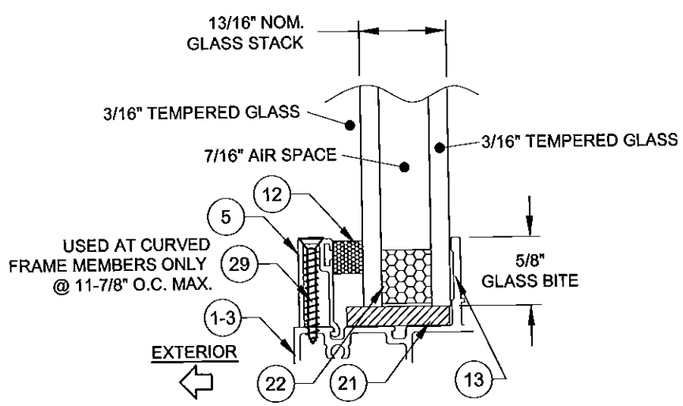

GLASS TYPE 3

TABLE DIMENSIONS MAY BE ORIENTED VERTICALLY OR HORIZONTALLY AS SHOWN.

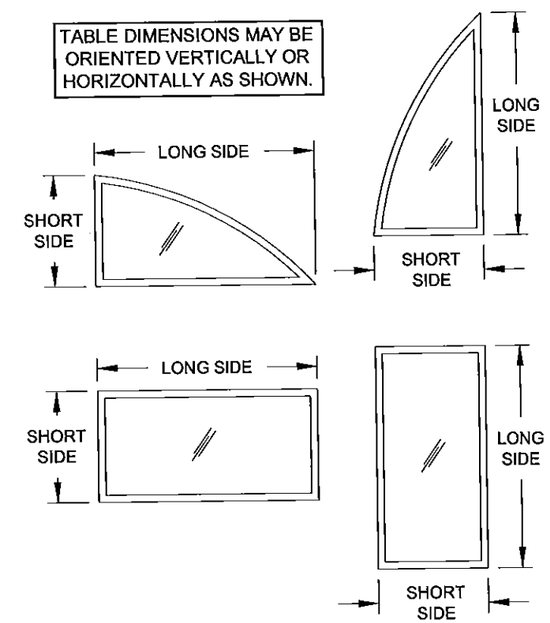

PRODUCT REVISED
as complying with the Florida Building Code
Acceptance No 15.0528.27
Expiration Date Feb. 19, 2019
By Manuel Perez
Miami Dade Product Control

Rev	Rev A	Rev B	Rev C
	NO CHANGE THIS SHEET		

1070 TECHNOLOGY DRIVE
N. VENICE, FL 34275
P.O. BOX 1529
NOKOMIS, FL 34274
(941)-480-1600
CERT. OF AUTH. #29296

Series	Desc.	Title	Scale	Sheet	DWG No.	Drawn By	Date	Rev.
PW-620	DESIGN PRESSURE TABLES 3	FIXED WINDOW INSTALLATION GUIDELINES	NTS	4 OF 9	MD-620.1	J ROSOWSKI	4/12/13	A

ANTHONY LYNN MILLER
LICENSE
No. 58705
5/20/15
STATE OF FLORIDA
PROFESSIONAL ENGINEER

A. LYNN MILLER, P.E.
P.E.# 58705

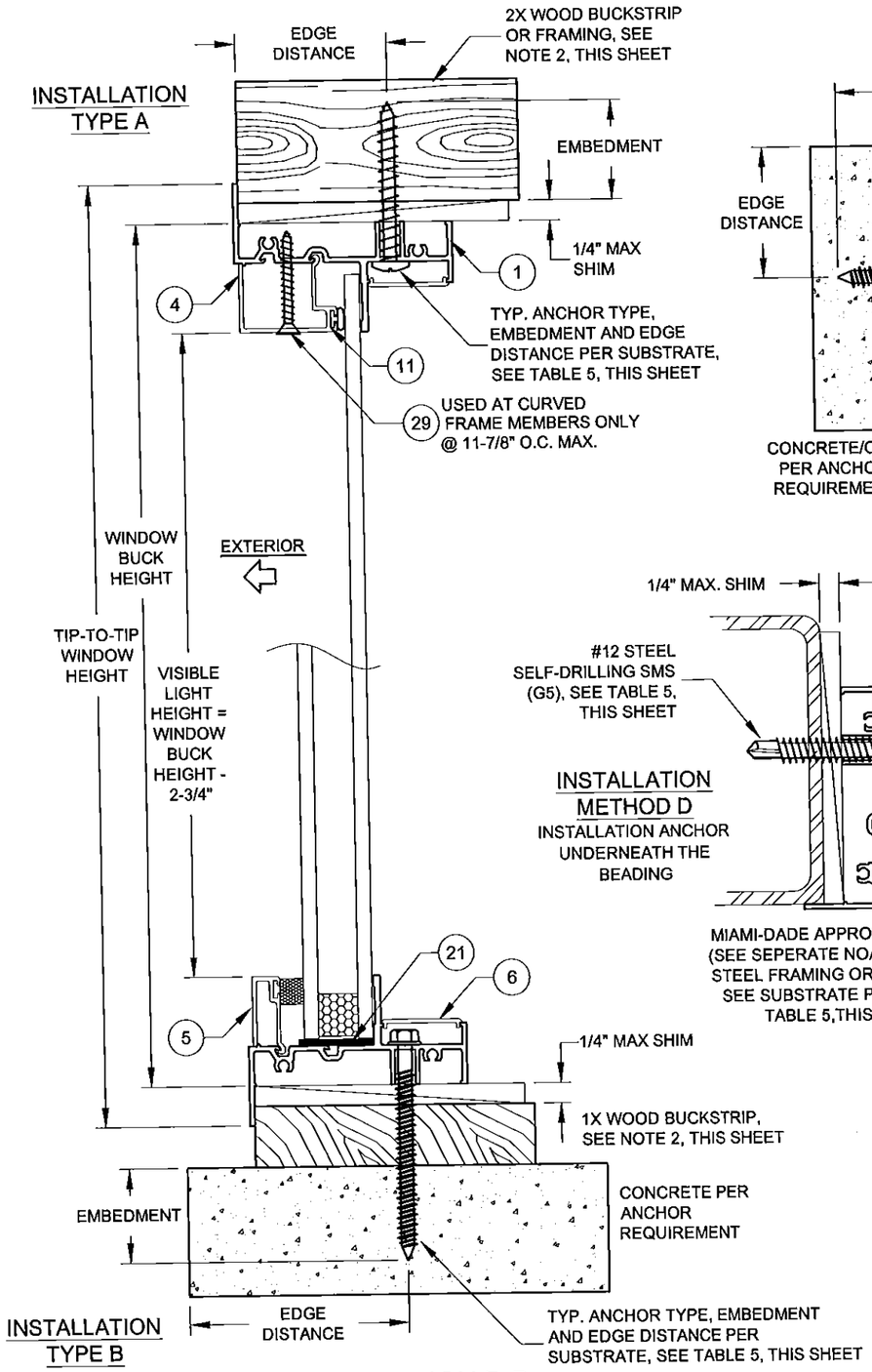

VERTICAL SECTION B-B

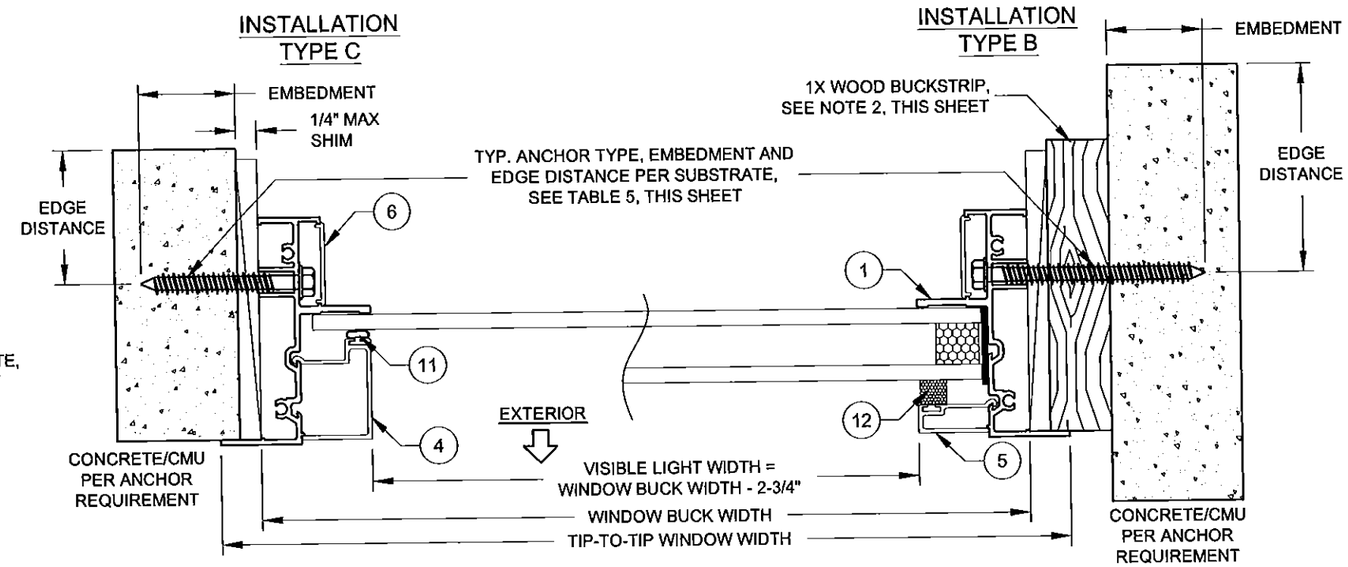

HORIZONTAL SECTION A-A

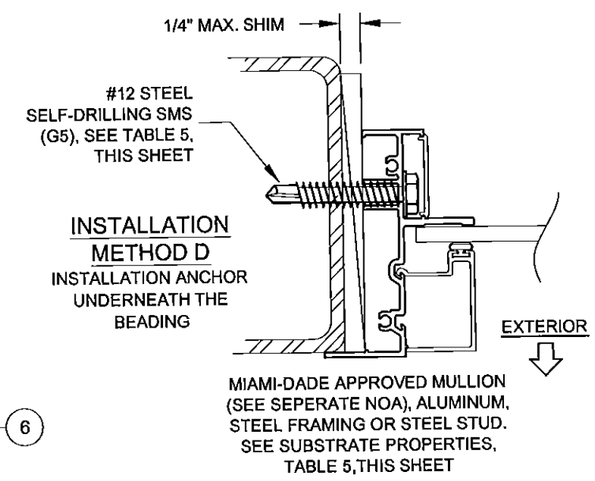

TABLE 5:

Anchor	Substrate	Min. Edge Distance	Min. Embedment	Max O.C. Spacing
#12 or #14 410 SS Screw	P.T. Southern Pine (SG=0.55)	9/16"	1-3/8"	12"
	Aluminum, 6063-T5 min.	3/8"	0.063" *	12"
	A36 Steel	3/8"	0.063" *	12"
	Steel Stud, Gr. 33 min.	3/8"	0.045" (18 Ga) *	12"
#12 or #14 Steel Screw (G5)	P.T. Southern Pine (SG=0.55)	9/16"	1-3/8"	12"
	Aluminum, 6063-T5 min.	3/8"	0.063" *	12"
	A36 Steel	3/8"	0.063" *	12"
	Steel Stud, Gr. 33 min.	3/8"	0.045" (18 Ga) *	12"
1/4" 410 SS CreteFlex	Ungrouted CMU, (ASTM C-90)	2-1/2"	1-1/4"	12"
	Concrete (min. 3.35 ksi)	1"	1-3/4"	12"
1/4" Steel Ultracon	Concrete (min. 2.85 ksi)	1"	1-3/4"	12"
	Concrete (min. 2.85 ksi)	2-1/2"	1-3/8"	12"
	Ungrouted CMU, (ASTM C-90)	2-1/2"	1-1/4"	12"
	Grouted CMU, (ASTM C-90)	2-1/2"	1-3/4"	12"
5/16" Steel Ultracon	Concrete (min. 3.5 ksi)	1-1/4"	1-3/4"	12"
	Grouted CMU, (ASTM C-90)	2-1/2"	1-3/4"	12"

* MIN. OF 3 THREADS BEYOND THE METAL SUBSTRATE.

INSTALLATION NOTES:

1. USE ONLY ANCHORS LISTED ON THIS SHEET. FOLLOW EMBEDMENT AND EDGE DISTANCE LIMITS.

2. WOOD BUCKS DEPICTED ON THIS SHEET AS "1X", ARE BUCKS WHOSE TOTAL THICKNESS IS LESS THAN 1-1/2". 1X WOOD BUCKS ARE OPTIONAL IF UNIT CAN BE INSTALLED DIRECTLY TO SOLID CONCRETE. WOOD BUCKS DEPICTED AS "2X" ARE 1-1/2" THICK OR GREATER. INSTALLATION TO THE SUBSTRATE OF WOOD BUCKS TO BE ENGINEERED BY OTHERS OR AS APPROVED BY AUTHORITY HAVING JURISDICTION.

3. FOR ATTACHMENT TO METAL: THE STRUCTURAL MEMBER SHALL BE OF A SIZE TO PROVIDE FULL SUPPORT TO THE WINDOW FRAME.

4. IF APPLICABLE, LOWER DESIGN PRESSURE FROM EITHER WINDOW OR MULLION NOA APPLIES TO WHOLE SYSTEM.

PRODUCT REVISED
as complying with the Florida Building Code
Acceptance No 15-0528.27
Expiration Date Feb 19, 2019
By Manuel Perez
Miami Dade Product Control

Rev A	NO CHANGE THIS SHEET
Rev B	
Rev C	

1070 TECHNOLOGY DRIVE
N. VENICE, FL 34275
P.O. BOX 1529
NOKOMIS, FL 34274
(941)-480-1600
CERT. OF AUTH. #29296

Title	FIXED WINDOW INSTALLATION GUIDELINES
Desc.	FLANGE INSTALLATION
Series	PW-620
Scale	NTS
Sheet	5 OF 9
DWG No.	MD-620.1
Rev.	A
Drawn By	J ROSOWSKI
Date	4/12/13

ANTHONY LYNN MILLER
LICENSE
No. 58705
5/2/15
STATE OF FLORIDA
PROFESSIONAL ENGINEER

A. LYNN MILLER, P.E.
P.E.# 58705

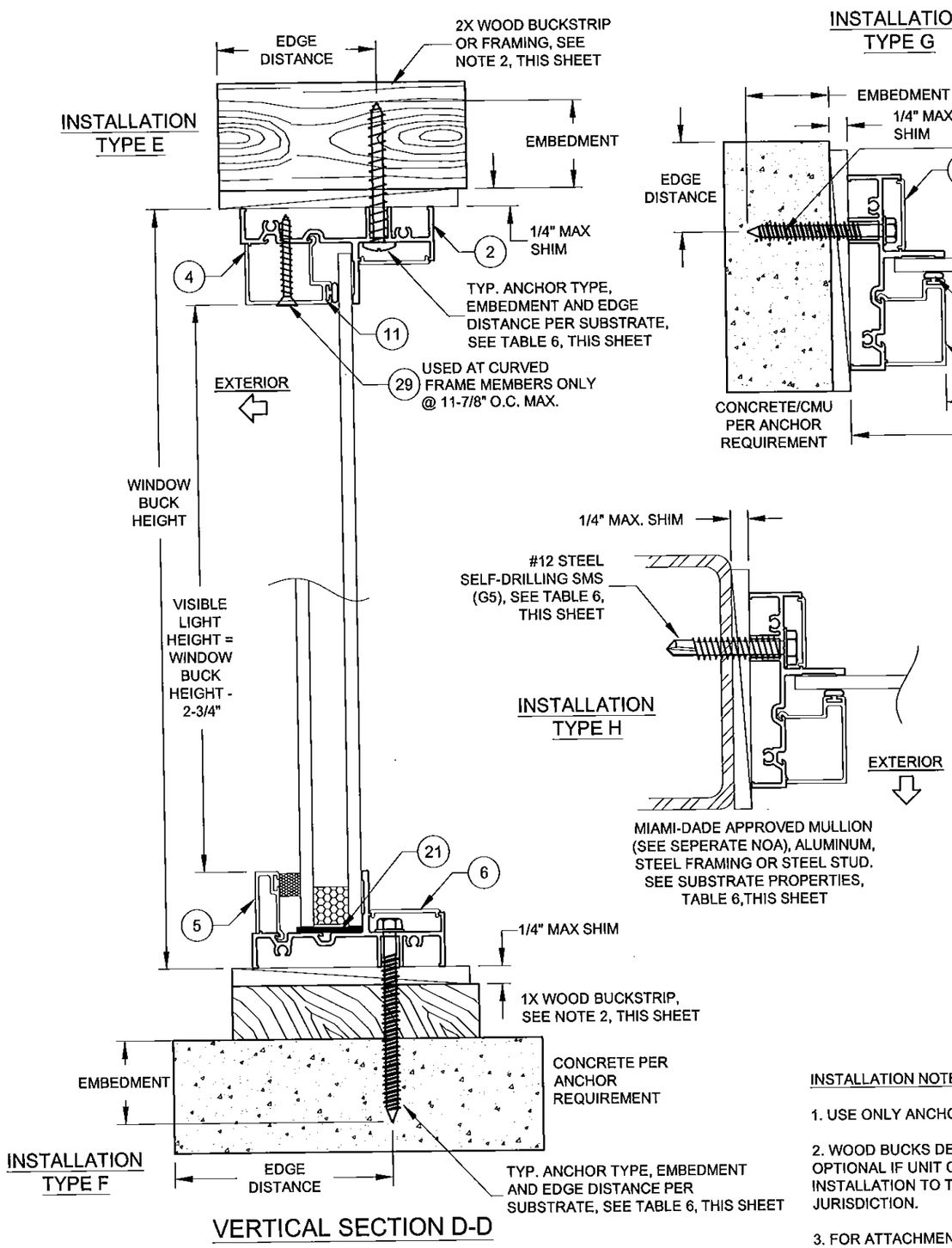

VERTICAL SECTION D-D

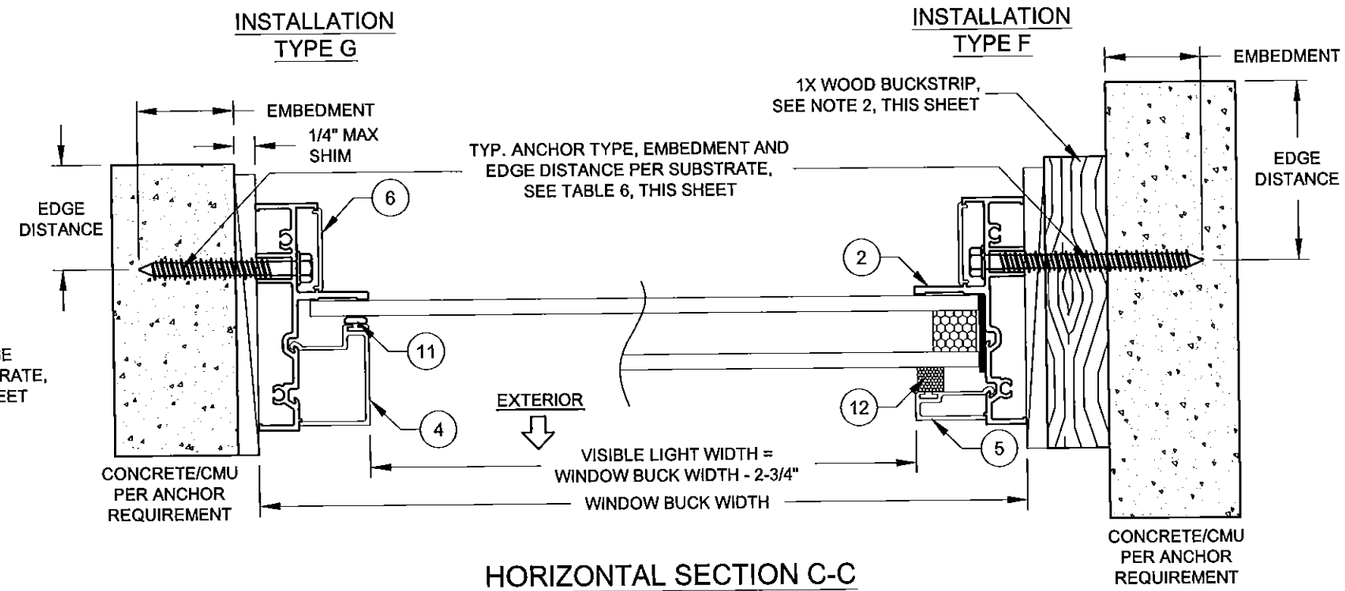

HORIZONTAL SECTION C-C

TABLE 6:

Anchor	Substrate	Min. Edge Distance	Min. Embedment	Max O.C. Spacing
#12 or #14 410 SS Screw	P.T. Southern Pine (SG=0.55)	9/16"	1-3/8"	12"
	Aluminum, 6063-T5 min.	3/8"	0.063" *	12"
	A36 Steel	3/8"	0.063" *	12"
	Steel Stud, Gr. 33 min.	3/8"	0.045" (18 Ga) *	12"
#12 or #14 Steel Screw (G5)	P.T. Southern Pine (SG=0.55)	9/16"	1-3/8"	12"
	Aluminum, 6063-T5 min.	3/8"	0.063" *	12"
	A36 Steel	3/8"	0.063" *	12"
	Steel Stud, Gr. 33 min.	3/8"	0.045" (18 Ga) *	12"
1/4" 410 SS CreteFlex	Ungrouted CMU, (ASTM C-90)	2-1/2"	1-1/4"	12"
	Concrete (min. 3.35 ksi)	1"	1-3/4"	12"
1/4" Steel Ultracon	Concrete (min. 2.85 ksi)	1"	1-3/4"	12"
	Concrete (min. 2.85 ksi)	2-1/2"	1-3/8"	12"
	Ungrouted CMU, (ASTM C-90)	2-1/2"	1-1/4"	12"
	Grouted CMU, (ASTM C-90)	2-1/2"	1-3/4"	12"
5/16" Steel Ultracon	Concrete (min. 3.5 ksi)	1-1/4"	1-3/4"	12"
	Grouted CMU, (ASTM C-90)	2-1/2"	1-3/4"	12"

* MIN. OF 3 THREADS BEYOND THE METAL SUBSTRATE.

INSTALLATION NOTES:

1. USE ONLY ANCHORS LISTED ON THIS SHEET. FOLLOW EMBEDMENT AND EDGE DISTANCE LIMITS.

2. WOOD BUCKS DEPICTED ON THIS SHEET AS "1X", ARE BUCKS WHOSE TOTAL THICKNESS IS LESS THAN 1-1/2". 1X WOOD BUCKS ARE OPTIONAL IF UNIT CAN BE INSTALLED DIRECTLY TO SOLID CONCRETE. WOOD BUCKS DEPICTED AS "2X" ARE 1-1/2" THICK OR GREATER. INSTALLATION TO THE SUBSTRATE OF WOOD BUCKS TO BE ENGINEERED BY OTHERS OR AS APPROVED BY AUTHORITY HAVING JURISDICTION.

3. FOR ATTACHMENT TO METAL: THE STRUCTURAL MEMBER SHALL BE OF A SIZE TO PROVIDE FULL SUPPORT TO THE WINDOW FRAME.

4. IF APPLICABLE, LOWER DESIGN PRESSURE FROM EITHER WINDOW OR MULLION NOA APPLIES TO WHOLE SYSTEM.

PRODUCT REVISED
as complying with the Florida Building Code
Acceptance No 15-0528.27
Expiration Date Feb 19, 2019
By Manuel Zerra
Miami Dade Product Control

Rev A	NO CHANGE THIS SHEET
Rev B	
Rev C	

1070 TECHNOLOGY DRIVE
N. VENICE, FL 34275
P.O. BOX 1529
NOKOMIS, FL 34274
(941)-480-1600
CERT. OF AUTH. #29296

Series	Desc.	Scale	Sheet	DWG No.	Drawn By	Date	Rev.
PW-620	EQUAL-LEG INSTALLATION	NTS	6 OF 9	MD-620.1	J ROSOWSKI	4/12/13	A

Title: FIXED WINDOW INSTALLATION GUIDELINES

ANTHONY LYNN MILLER
LICENSE
No. 58705
STATE OF FLORIDA
PROFESSIONAL ENGINEER
5/20/15

A. LYNN MILLER, P.E.
P.E.# 58705

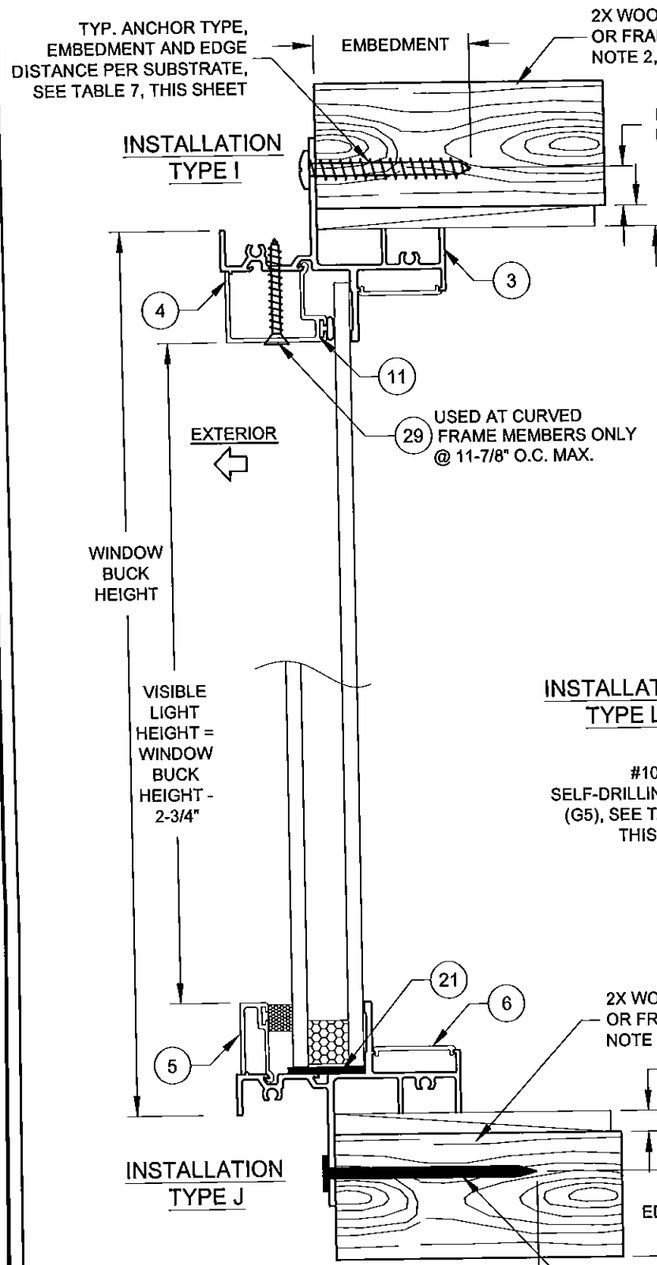

VERTICAL SECTION F-F

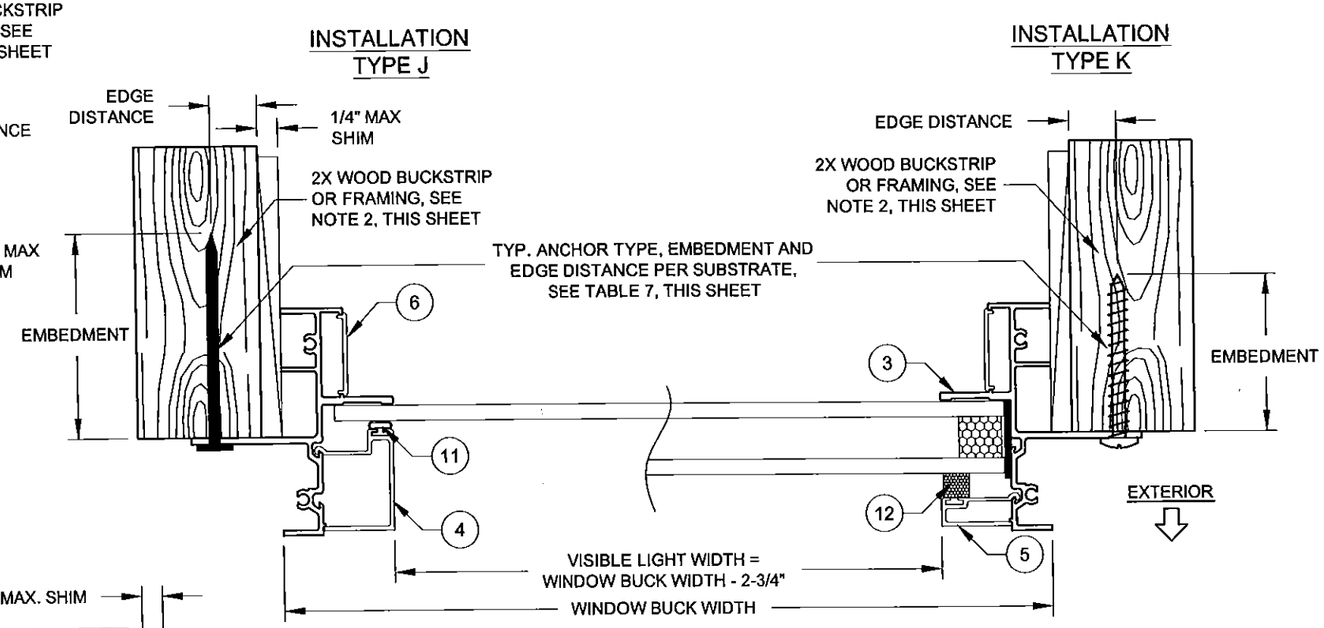

HORIZONTAL SECTION E-E

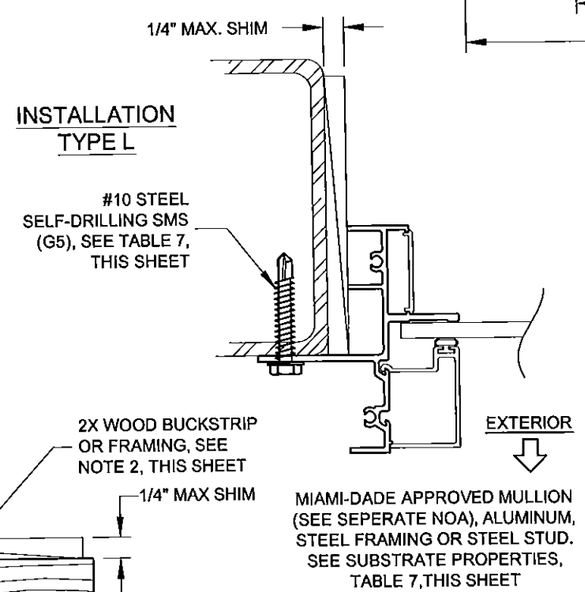

TABLE 7:

Anchor	Substrate	Min. Edge Distance	Max. O.C. Spacing
2-1/2" x .113" Box Nail	P.T. Southern Pine (SG=0.55)	5/16"	5"
2-1/2" x .131" Common Nail	P.T. Southern Pine (SG=0.55)	3/8"	5"
2-1/2" x .145" Roofing Nail	P.T. Southern Pine (SG=0.55)	3/8"	5"
#10 x 1" Steel Screw*	P.T. Southern Pine (SG=0.55)	1/2"	5"
	0.093" Aluminum, 6063-T5 min.	5/16"	5"
	1/16" A36 Steel	5/16"	5"
	0.045" (18 Ga) Steel Stud, Gr. 33	5/16"	5"

* MIN. OF 3 THREADS BEYOND THE METAL SUBSTRATE.

INSTALLATION NOTES:

1. USE ONLY ANCHORS LISTED ON THIS SHEET. FOLLOW EMBEDMENT AND EDGE DISTANCE LIMITS.

2. WOOD BUCKS DEPICTED ON THIS SHEET AS "1X", ARE BUCKS WHOSE TOTAL THICKNESS IS LESS THAN 1-1/2". 1X WOOD BUCKS ARE OPTIONAL IF UNIT CAN BE INSTALLED DIRECTLY TO SOLID CONCRETE. WOOD BUCKS DEPICTED AS "2X" ARE 1-1/2" THICK OR GREATER. INSTALLATION TO THE SUBSTRATE OF WOOD BUCKS TO BE ENGINEERED BY OTHERS OR AS APPROVED BY AUTHORITY HAVING JURISDICTION.

3. FOR ATTACHMENT TO METAL: THE STRUCTURAL MEMBER SHALL BE OF A SIZE TO PROVIDE FULL SUPPORT TO THE WINDOW FRAME.

4. IF APPLICABLE, LOWER DESIGN PRESSURE FROM EITHER WINDOW OR MULLION NOA APPLIES TO WHOLE SYSTEM.

PRODUCT REVISED
as complying with the Florida Building Code
Acceptance No 15-0528.27
Expiration Date Feb 19, 2019
By Manuel Perez
Miami Dade Product Control

Rev	
Rev A	NO CHANGE THIS SHEET
Rev B	
Rev C	

1070 TECHNOLOGY DRIVE
N. VENICE, FL 34275
P.O. BOX 1529
NOKOMIS, FL 34274
(941)-480-1600
CERT. OF AUTH. #29296

Series	Desc.	Sheet	Scale	DWG No.	Drawn By	Date	Rev.
PW-620	FIN INSTALLATION	7 OF 9	NTS	MD-620.1	J ROSOWSKI	4/12/13	A

Title: FIXED WINDOW INSTALLATION GUIDELINES

ANTHONY LYNN MILLER
LICENSE
No. 58705
5/20/15
STATE OF FLORIDA
PROFESSIONAL ENGINEER

A. LYNN MILLER, P.E.
P.E.# 58705

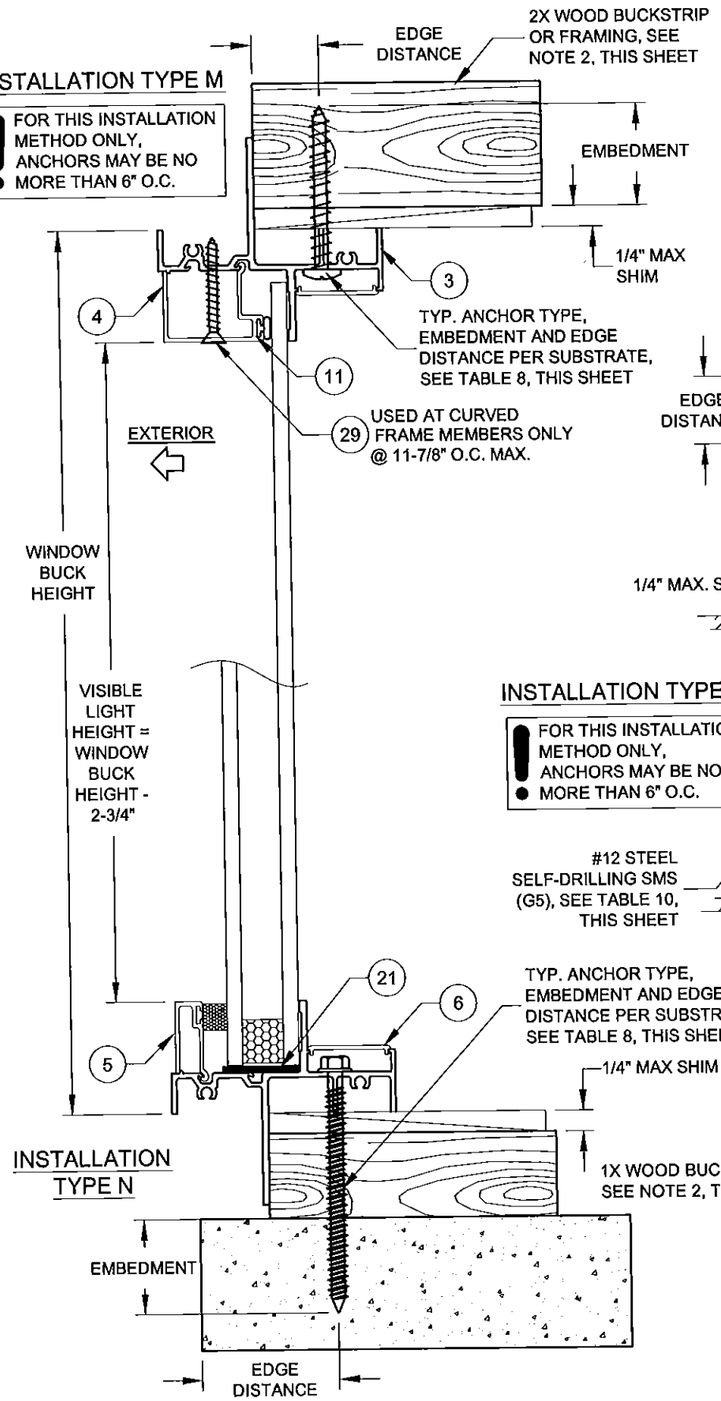

VERTICAL SECTION H-H

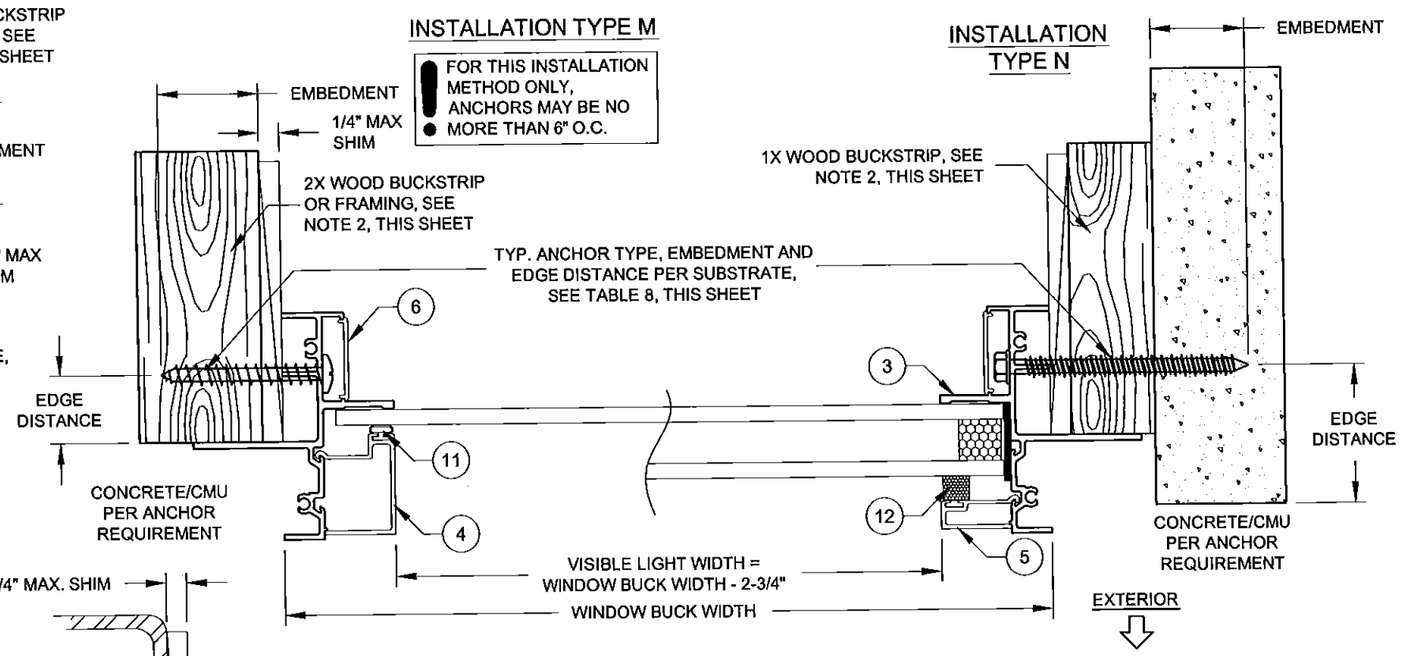

HORIZONTAL SECTION G-G

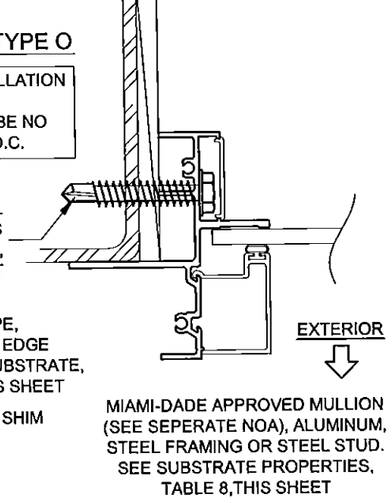

TABLE 8:

Anchor	Substrate	Min. Edge Distance	Min. Embedment	Max. O.C. Spacing
#12 or #14 410 SS Screw	P.T. Southern Pine (SG=0.55)	9/16"	1-3/8"	6"
	Aluminum, 6063-T5 min.	3/8"	0.063" *	6"
	A36 Steel	3/8"	0.063" *	6"
	Steel Stud, Gr. 33 min.	3/8"	0.045" (18 Ga) *	6"
#12 or #14 Steel Screw (G5)	P.T. Southern Pine (SG=0.55)	9/16"	1-3/8"	6"
	Aluminum, 6063-T5 min.	3/8"	0.063" *	6"
	A36 Steel	3/8"	0.063" *	6"
	Steel Stud, Gr. 33 min.	3/8"	0.045" (18 Ga) *	6"
1/4" 410 SS CreteFlex	Ungrouted CMU, (ASTM C-90)	2-1/2"	1-1/4"	12"
	Concrete (min. 3.35 ksi)	1"	1-3/4"	12"
1/4" Steel Ultracon	Concrete (min. 2.85 ksi)	1"	1-3/4"	12"
	Concrete (min. 2.85 ksi)	2-1/2"	1-3/8"	12"
	Ungrouted CMU, (ASTM C-90)	2-1/2"	1-1/4"	12"
	Grouted CMU, (ASTM C-90)	2-1/2"	1-3/4"	12"
5/16" Steel Ultracon	Concrete (min. 3.5 ksi)	1-1/4"	1-3/4"	12"
	Grouted CMU, (ASTM C-90)	2-1/2"	1-3/4"	12"

* MIN. OF 3 THREADS BEYOND THE METAL SUBSTRATE.

INSTALLATION NOTES:

1. USE ONLY ANCHORS LISTED ON THIS SHEET. FOLLOW EMBEDMENT AND EDGE DISTANCE LIMITS.

2. WOOD BUCKS DEPICTED ON THIS SHEET AS "1X", ARE BUCKS WHOSE TOTAL THICKNESS IS LESS THAN 1-1/2". 1X WOOD BUCKS ARE OPTIONAL IF UNIT CAN BE INSTALLED DIRECTLY TO SOLID CONCRETE. WOOD BUCKS DEPICTED AS "2X" ARE 1-1/2" THICK OR GREATER. INSTALLATION TO THE SUBSTRATE OF WOOD BUCKS TO BE ENGINEERED BY OTHERS OR AS APPROVED BY AUTHORITY HAVING JURISDICTION.

3. FOR ATTACHMENT TO METAL: THE STRUCTURAL MEMBER SHALL BE OF A SIZE TO PROVIDE FULL SUPPORT TO THE WINDOW FRAME.

4. IF APPLICABLE, LOWER DESIGN PRESSURE FROM EITHER WINDOW OR MULLION NOA APPLIES TO WHOLE SYSTEM.

PRODUCT REVISED
as complying with the Florida Building Code
Acceptance No 15-0528.27
Expiration Date Feb. 19, 2019
By Manuel Perez
Miami Dade Product Control

Rev A	NO CHANGE THIS SHEET
Rev B	
Rev C	

1070 TECHNOLOGY DRIVE
N. VENICE, FL 34275
P.O. BOX 1529
NOKOMIS, FL 34274
(941)-480-1600
CERT. OF AUTH. #29296

Title: FIXED WINDOW INSTALLATION GUIDELINES
Date: 4/12/13
Drawn By: J ROSOWSKI
Rev.: A
Desc.: FIN INSTALLATION
DWG No.: MD-620.1
Sheet: 8 OF 9
Scale: NTS
Series: PW-620

ANTHONY LYNN MILLER
LICENSE
No. 58705
STATE OF FLORIDA
PROFESSIONAL ENGINEER
5/20/15

A. LYNN MILLER, P.E.
P.E.# 58705

ASSEMBLY DETAILS FOR FLANGE & EQUAL-LEG FRAMES

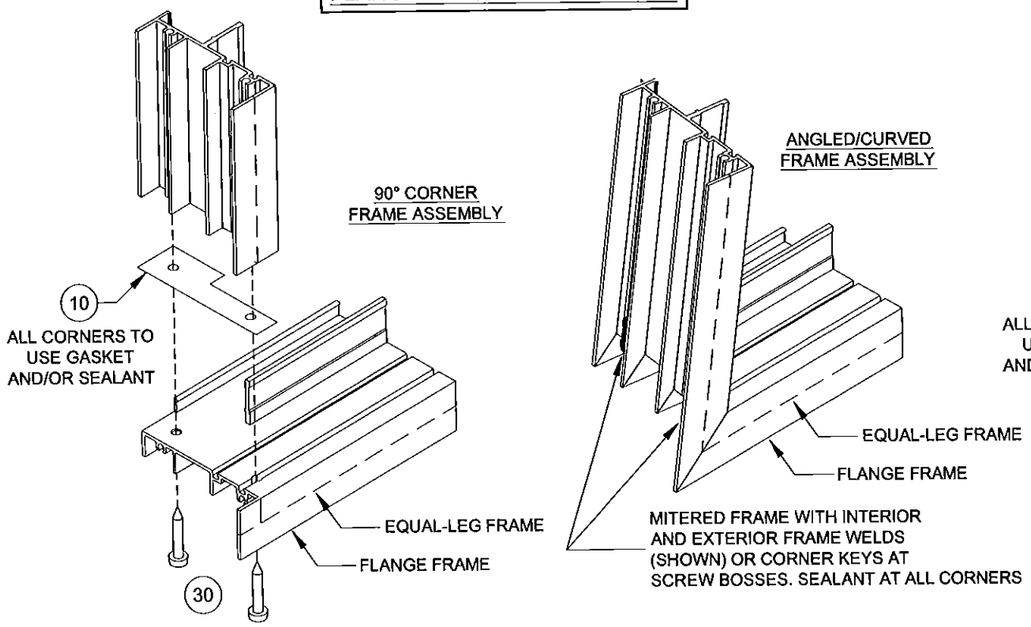

ASSEMBLY DETAILS FOR FIN FRAMES

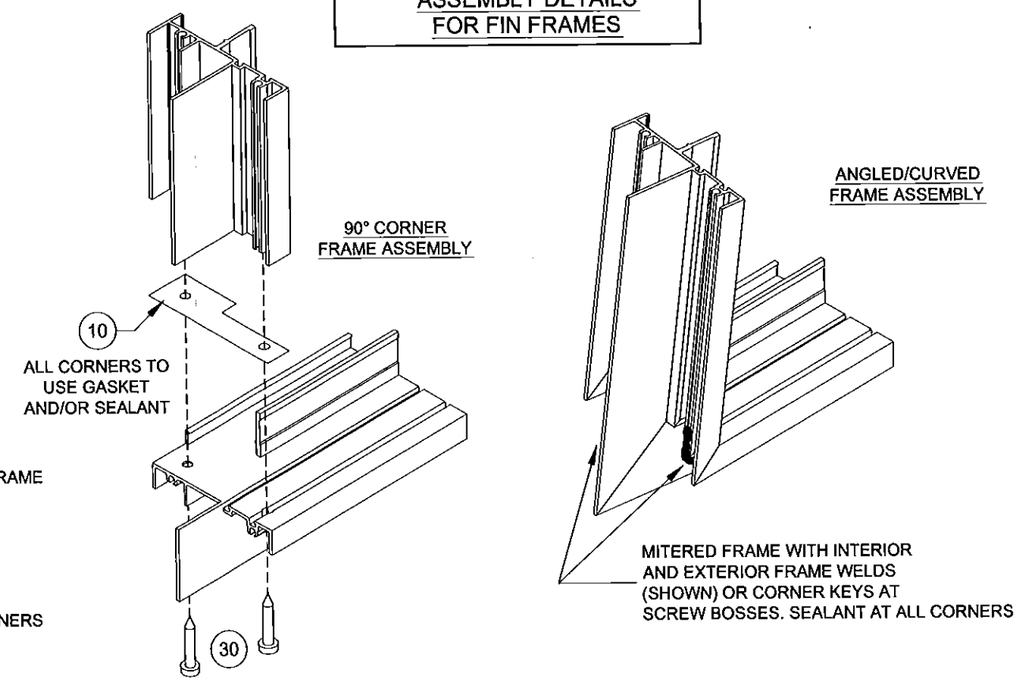

TABLE 9:

Item #	PGT Part #	Description	Material
1	4253C	Flanged Frame	Alum. 6063-T5
2	4285	Equal-leg Frame	Alum. 6063-T5
3	4256	Integral Fin Frame	Alum. 6063-T5
4	4255	7/16" Lami. Glass Beading	Alum. 6063-T5
5	4254	I.G. Glass Beading	Alum. 6063-T5
6a	4270	Installation Fastener Cover	Alum. 6063-T5
6b	4224	Installation Fastener Cover	Rigid PVC
10	70589C	Gasket (at 90° corner joints)	Polyethylene
11	TP247/8	Vinyl Bulb Weatherstrip	Flex PVC, Duro. 65 +/-1
13		Dow 899, GE 7700 Silicone or Equiv.	
20	71652K	Setting Block, Mono. 3/16" x 7/16" x 4"	Neoprene, Duro. 85 +/-1
21	71704AK	Setting Block, I.G. 3/16" x 1-3/32" x 4"	Neoprene, Duro. 85 +/-1
22	DURAK716	7/16" DuraSeal Spacer	
29		#6 x 1-1/4" FH SMS	Stainless Steel
30	781PQX	#8 x 1" Quad PH SMS	Stainless Steel

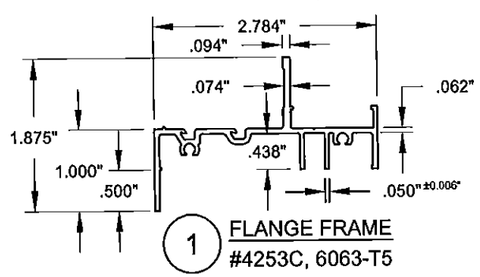

1 FLANGE FRAME
#4253C, 6063-T5

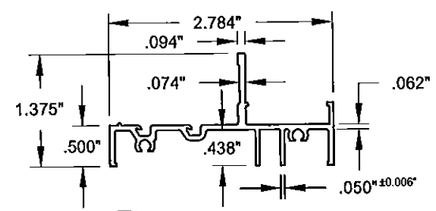

2 EQUAL-LEG FRAME
#4285, 6063-T5

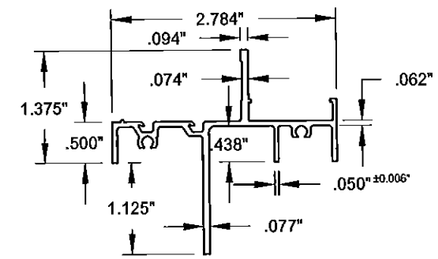

3 FIN FRAME
#4256, 6063-T5

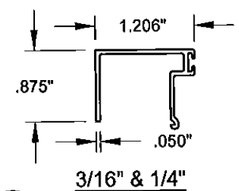

4 3/16" & 1/4" GLASS BEADING
#4258, 6063-T5

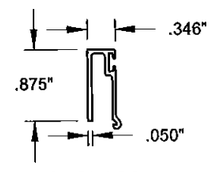

5 I.G. GLASS BEADING
#4254, 6063-T5

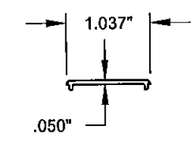

6a INSTALLATION FASTENER COVER
#4270, 6063-T5

PRODUCT REVISED
as complying with the Florida Building Code
Acceptance No 15-0528.27
Expiration Date Feb. 19, 2019
By Manuel Perez
Miami-Dade Product Control

Rev A	NO CHANGE THIS SHEET
Rev B	
Rev C	

1070 TECHNOLOGY DRIVE
N. VENICE, FL 34275
P.O. BOX 1529
NOKOMIS, FL 34274
(941)-480-1600
CERT. OF AUTH. #29296

Title	Desc.	Series	Sheet	Scale	DWG No.	Rev.
FIXED WINDOW INSTALLATION GUIDELINES	BOM, EXTRUSIONS AND CORNERS	PW-620	9 OF 9	NTS	MD-620.1	A

Drawn By	Date
J ROSOWSKI	4/12/13

ANTHONY LYNN MILLER
LICENSE
No. 58705
STATE OF FLORIDA
PROFESSIONAL ENGINEER
5/20/15

A. LYNN MILLER, P.E.
P.E.# 58705