MIAMI-DADE COUNTY
DEPARTMENT OF REGULATORY AND ECONOMIC RESOURCES (RER)
BOARD AND CODE ADMINISTRATION DIVISION

MIAMI-DADE COUNTY
PRODUCT CONTROL SECTION
11805 SW 26 Street, Room 208
T (786) 315-2590 F (786) 315-2599
www.miamidade.gov/economy

# NOTICE OF ACCEPTANCE (NOA)

**AluMex Industries, LLC**
**9220 Palm River Drive, Ste. 102**
**Tampa, FL 33619**

**SCOPE:**

This NOA is being issued under the applicable rules and regulations governing the use of construction materials. The documentation submitted has been reviewed and accepted by Miami-Dade County RER-Product Control Section to be used in Miami-Dade County and other areas where allowed by the Authority Having Jurisdiction (AHJ).

This NOA shall not be valid after the expiration date stated below. The Miami-Dade County Product Control Section (In Miami-Dade County) and/ or the AHJ (in areas other than Miami-Dade County) reserve the right to have this product or material tested for quality assurance purposes. If this product or material fails to perform in the accepted manner, the manufacturer will incur the expense of such testing and the AHJ may immediately revoke, modify, or suspend the use of such product or material within their jurisdiction. RER reserves the right to revoke this acceptance, if it is determined by Miami-Dade County Product Control Section that this product or material fails to meet the requirements of the applicable building code.

This product is approved as described herein, and has been designed to comply with the Florida Building Code, including the High Velocity Hurricane Zone.

**DESCRIPTION: Series "WS-4500" Aluminum Window Wall System – L.M.I.**

**APPROVAL DOCUMENT:** Drawing No. **W09-45**, titled "Series WS-4500 Alum. Window Wall System (LMI)", sheets 1 through 9 of 9, dated 09/02/09, with revision E dated 06/08/15, prepared by Al-Farooq Corporation, signed and sealed by Javad Ahmad, P.E., bearing the Miami-Dade County Product Control Revision stamp with the Notice of Acceptance number and expiration date by the Miami-Dade County Product Control Section.

**MISSILE IMPACT RATING: Large and Small Missile Impact Resistant**

**LABELING:** Each unit shall bear a permanent label with the manufacturer's name or logo, city, state, model/ series, and following statement: "Miami-Dade County Product Control Approved", unless otherwise noted herein.

**RENEWAL** of this NOA shall be considered after a renewal application has been filed and there has been no change in the applicable building code negatively affecting the performance of this product.

**TERMINATION** of this NOA will occur after the expiration date or if there has been a revision or change in the materials, use, and/ or manufacture of the product or process. Misuse of this NOA as an endorsement of any product, for sales, advertising or any other purposes shall automatically terminate this NOA. Failure to comply with any section of this NOA shall be cause for termination and removal of NOA.

**ADVERTISEMENT:** The NOA number preceded by the words Miami-Dade County, Florida, and followed by the expiration date may be displayed in advertising literature. If any portion of the NOA is displayed, then it shall be done in its entirety.

**INSPECTION:** A copy of this entire NOA shall be provided to the user by the manufacturer or its distributors and shall be available for inspection at the job site at the request of the Building Official.

This NOA **revises and renews NOA No. 13-0421.11** and consists of this page 1 and evidence pages E-1 and E-2, as well as approval document mentioned above.

The submitted documentation was reviewed by **Manuel Perez, P.E.**

MIAMI-DADE COUNTY APPROVED

10/14/15

## NOTICE OF ACCEPTANCE: EVIDENCE SUBMITTED

**A. DRAWINGS**

1. Manufacturer's die drawings and sections.
   ***(Submitted under NOA No.10-0209.05)***
2. Drawing No. **W09-45**, titled "WS-4500 Alum. Window Wall System (L.M.I.)", sheets 1 through 9 of 9, dated 09/02/09, with revision E dated 06/08/15, prepared by Al-Farooq Corporation, signed and sealed by Javad Ahmad, P.E.

**B. TESTS**

1. Test reports on: 1) Air Infiltration Test, per FBC, TAS 202-94
   2) Uniform Static Air Pressure Test, Loading per FBC, TAS 202-94
   3) Water Resistance Test, per FBC, TAS 202-94
   4) Large Missile Impact Test per FBC, TAS 201-94
   5) Cyclic Wind Pressure Loading per FBC, TAS 203-94
   6) Forced Entry Test, per FBC 2411.3.2.1, and TAS 202-94

   along with marked-up drawings and installation diagram of an aluminum window wall system, prepared by Architectural Testing, Inc., Test Report No. **ATI 91200.01-401-18**, dated 12/16/09, with addendum letter dated 04/15/10, both signed and sealed by Joseph A. Reed, P.E.
   ***(Submitted under NOA No.10-0209.05)***

**C. CALCULATIONS**

1. Anchor verification calculations and structural analysis, complying with **FBC 5th Edition (2014)**, dated 06/04/15, prepared by Al-Farooq Corporation, signed and sealed by Javad Ahmad, P.E.
2. Glazing complies with **ASTM E1300-09**

**D. QUALITY ASSURANCE**

1. Miami-Dade Department of Regulatory and Economic Resources (RER).

**E. MATERIAL CERTIFICATIONS**

1. Notice of Acceptance No. **14-0916.11** issued to **Kuraray America, Inc.** for their **"SentryGlas® (Clear and White) Glass Interlayers"** dated 06/25/15, expiring on 07/04/18.
2. Notice of Acceptance No. **14-0423.16** issued to **Eastman Chemical Company (MA)** for their "**Saflex HP Clear or Color Glass Interlayers**" dated 06/19/14, expiring on 04/14/18.
3. Notice of Acceptance No. **13-0909.10** issued to Polymer Extrusion Technology, Inc. dba Glasslam for their **"Glasslam Safety-Plus II Glass Interlayer"** dated 10/03/13, expiring on 08/07/18.

Manuel Perez

**Manuel Perez, P.E.**
**Product Control Examiner**
**NOA No. 15-0601.09**
**Expiration Date: May 12, 2020**
**Approval Date: October 22, 2015**

## NOTICE OF ACCEPTANCE: EVIDENCE SUBMITTED

### F. STATEMENTS

1. Statement letter of conformance, complying with **FBC 5th Edition (2014)**, and of no financial interest, dated June 4, 2015, issued by Al-Farooq Corporation, signed and sealed by Javad Ahmad, P.E.
2. Laboratory compliance letter for Test Report No. **ATI 91200.01-401-18** issued by Architectural Testing, Inc., dated 12/16/09, signed and sealed by Joseph A. Reed, P.E. ***(Submitted under NOA No.10-0209.05)***

### G. OTHERS

1. Notice of Acceptance No. **13-0423.11**, issued to AluMex Industries, LLC for their Series "WS-4500" Aluminum Storefront - LMI, approved on 01/23/14 and expiring on 05/12/15.

Manuel Perez

**Manuel Perez, P.E.**
**Product Control Examiner**
**NOA No. 15-0601.09**
**Expiration Date: May 12, 2020**
**Approval Date: October 22, 2015**

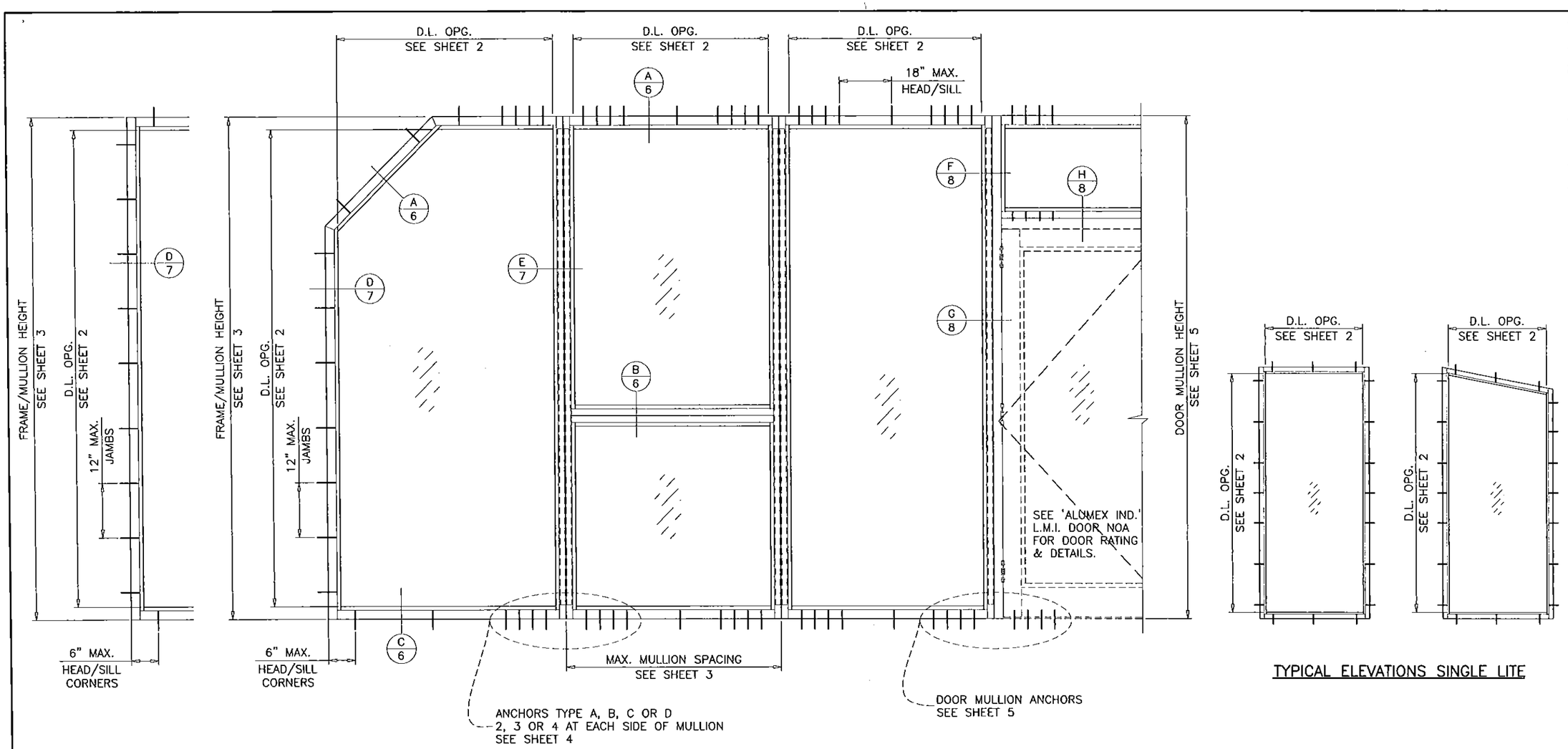


TYPICAL ELEVATION




TYPICAL ELEVATIONS SINGLE LITE

## SERIES WS-4500
## ALUMINUM WINDOW WALL SYSTEM

THIS SYSTEM IS RATED FOR LARGE & SMALL MISSILE IMPACT SHUTTERS ARE NOT REQUIRED.

CODE REQUIREMENTS FOR SAFEGUARDS MUST BE OBSERVED.

---

THIS PRODUCT HAS BEEN DESIGNED AND TESTED TO COMPLY WITH THE REQUIREMENTS OF THE FLORIDA BUILDING CODE INCLUDING HIGH VELOCITY HURRICANE ZONE (HVHZ).

WOOD BUCKS BY OTHERS, MUST BE ANCHORED PROPERLY TO TRANSFER LOADS TO THE STRUCTURE.

ANCHORS SHALL BE AS LISTED, SPACED AS SHOWN ON DETAILS, ANCHORS EMBEDMENT TO BASE MATERIAL SHALL BE BEYOND WALL DRESSING OR STUCCO.

ANCHORING OR LOADING CONDITIONS NOT SHOWN IN THESE DETAILS ARE NOT PART OF THIS APPROVAL.

A LOAD DURATION INCREASE IS USED IN DESIGN OF ANCHORS INTO WOOD ONLY.

ALL SHIMS TO BE HIGH IMPACT, NON-METALLIC AND NON-COMPRESSIBLE.

MATERIALS INCLUDING BUT NOT LIMITED TO STEEL/METAL SCREWS, THAT COME INTO CONTACT WITH OTHER DISSIMILAR MATERIALS SHALL MEET THE REQUIREMENTS OF THE FLORIDA BUILDING CODE.

## INSTRUCTIONS:

USE CHARTS AS FOLLOWS.

**STEP 1** DETERMINE DESIGN WIND LOAD REQUIREMENT BASED ON WIND VELOCITY, BLDG. HEIGHT, WIND ZONE USING APPLICABLE ASCE 7 STANDARD.

**STEP 2** SEE CHARTS ON SHEET 2 FOR DESIGN LOAD CAPACITY OF DESIRED GLASS SIZE.

**STEP 3** CHECK MULLION CAPACITY FOR A GIVEN SPACING AND HEIGHT USING CHARTS ON SHEET 3 THE CAPACITY SHOULD EXCEED THE DESIGN LOAD.

**STEP 4** USING CHARTS ON SHEET 4 SELECT ANCHOR OPTION WITH DESIGN RATING MORE THAN DESIGN LOAD SPECIFIED IN STEP 1 ABOVE.

**STEP 5** THE LOWEST VALUE RESULTING FROM STEPS 2, 3 AND 4 SHALL APPLY TO ENTIRE SYSTEM. THIS VALUE SHOULD MEET OR EXCEED THE DESIGN WIND LOAD REQUIREMENT OBTAINED IN STEP 1 ABOVE.

Engr: JAVAD AHMAD
CIVIL
FLA. PE # 70592
C.A.N. 3538

10 2015

PRODUCT REVISED
as complying with the Florida Building Code
Acceptance No 15-0601.09
Expiration Date May 12, 2020
By Manuel Perez
Miami-Dade Product Control


AL-FAROOQ CORPORATION
ENGINEERS & PRODUCT DEVELOPMENT
1235 S.W. 87 AVE
MIAMI, FLORIDA 33174
TEL. (305) 264-8100 FAX. (305) 262-6978
STORE\W09-45CDI

WS-4500 ALUM WINDOW WALL SYSTEM (L.M.I.)

AluMex Industries, LLc.
9220 Palm River Road, #102
Tampa, FL. 33619
TEL. (813) 744-5117 FAX. (813) 744-5118


revisions:

| no | date | by | description |
|---|---|---|---|
| A | 04.16.10 | | REV. PER BCCO COMMENTS |
| B | 04.02.13 | | UPDATED TO 2010 FBC, NAME REV. |
| C | 06.06.13 | | REV. PER RER COMMENTS |
| D | 08.15.13 | | NO CHANGE THIS SHEET |
| E | 06.08.15 | | UPDATED TO 2014 FBC |

date: 09-02-09
scale: 1/2"=1-0"
dr. by: HAMID
chk. by:

drawing no.
W09-45

| GLASS LOAD CAPACITY – PSF | | |
|---|---|---|
| NOMINAL DIMS. | | GLASS TYPES 'A', 'B' & 'C' |
| D.L.O. WIDTH | D.L.O. HEIGHT | EXT.(+)/INT.(–) |
| 30" | 84" | 150.0 |
| 36" | | 150.0 |
| 42" | | 137.1 |
| 48" | | 120.0 |
| 54" | | 106.7 |
| 60" | | 96.0 |
| 30" | 90" | 150.0 |
| 36" | | 150.0 |
| 42" | | 137.1 |
| 48" | | 120.0 |
| 54" | | 106.7 |
| 60" | | 96.0 |
| 30" | 96" | 150.0 |
| 36" | | 150.0 |
| 42" | | 137.1 |
| 48" | | 120.0 |
| 54" | | 106.7 |
| 60" | | 96.0 |
| 30" | 102" | 150.0 |
| 36" | | 150.0 |
| 42" | | 137.1 |
| 48" | | 120.0 |
| 54" | | 106.7 |
| 30" | 108" | 150.0 |
| 36" | | 150.0 |
| 42" | | 136.2 |
| 48" | | 120.0 |
| 30" | 114" | 150.0 |
| 36" | | 150.0 |
| 42" | | 134.5 |
| 48" | | 120.0 |
| 30" | 120" | 150.0 |
| 36" | | 150.0 |
| 42" | | 133.0 |
| 48" | | 120.0 |

NOTE:
GLASS CAPACITIES ON THIS SHEET ARE BASED ON ASTM E1300-09 (3 SEC. GUSTS).

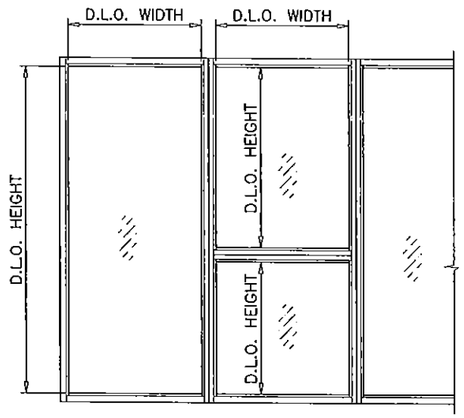


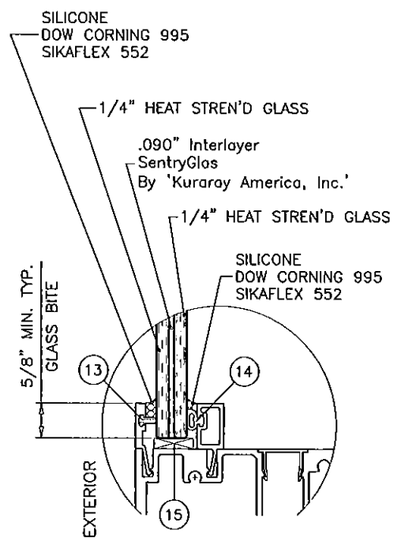


GLASS TYPE 'A'

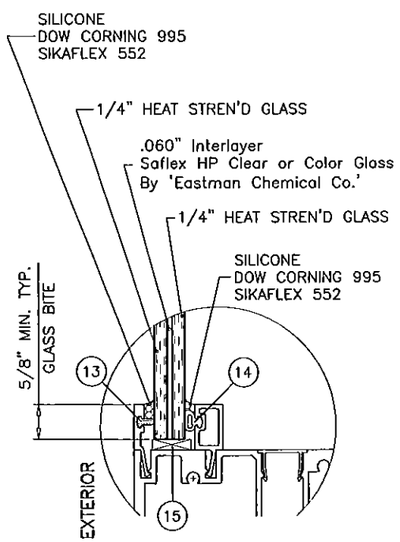


GLASS TYPE 'B'

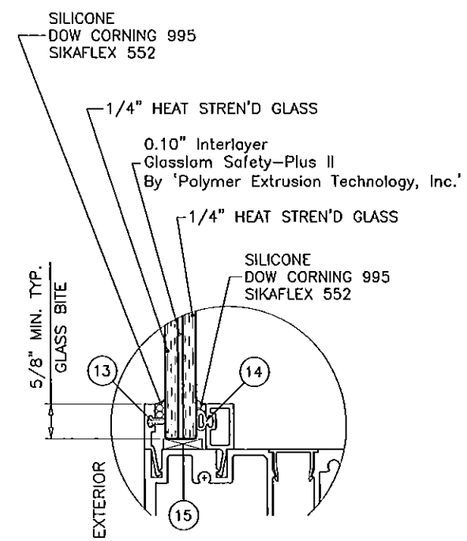


GLASS TYPE 'C'

GLAZING OPTIONS

GLASS

Engr: JAVAD AHMAD
CIVIL
FLA. PE # 70592
C.A.N. 3538

JUN 10 2015

PRODUCT REVISED
as complying with the Florida
Building Code
Acceptance No 15-0601.09
Expiration Date May 12, 2020
By Manuel Perez
Miami Dade Product Control


AL-FAROOQ CORPORATION
ENGINEERS & PRODUCT DEVELOPMENT
1235 S.W. 87 AVE
MIAMI, FLORIDA 33174
TEL. (305) 264-8100 FAX. (305) 262-6978


STORE\W09-45CDI

WS-4500 ALUM WINDOW WALL SYSTEM (L.M.I.)

AluMex Industries, LLc.
9220 Palm River Road, #102
Tampa, FL. 33619
TEL. (813) 744-5117 FAX. (813) 744-5118

revisions:

| no | date | by | description |
|---|---|---|---|
| A | 04.16.10 | | REV. PER BCCO COMMENTS |
| B | 04.02.13 | | UPDATED TO 2010 FBC. NAME REV. |
| C | 06.06.13 | | REV. PER PER COMMENTS |
| D | 08.15.13 | | NO CHANGE THIS SHEET |
| E | 06.08.15 | | UPDATED TO 2014 FBC |

date: 09-02-09
scale: 3/8" = 1"
dr. by: HAMID
chk. by:

drawing no.
W09-45

## MULLION LOAD CAPACITY – PSF
WITHOUT INTERMEDIATE HORIZONTALS

| NOMINAL DIMS. | | MULL 'M1' | | MULL 'M2' | |
|---|---|---|---|---|---|
| WIDTH (W) | FRAME HEIGHT | EXT.(+) | INT.(–) | EXT.(+) | INT.(–) |
| 30" | 84" | 120.0 | 120.0 | 150.0 | 150.0 |
| 36" | | 120.0 | 120.0 | 150.0 | 150.0 |
| 42" | | 120.0 | 120.0 | 150.0 | 150.0 |
| 48" | | 120.0 | 120.0 | 150.0 | 150.0 |
| 54" | | 120.0 | 120.0 | 150.0 | 150.0 |
| 60" | | 120.0 | 120.0 | 150.0 | 150.0 |
| 30" | 90" | 120.0 | 120.0 | 150.0 | 150.0 |
| 36" | | 120.0 | 120.0 | 150.0 | 150.0 |
| 42" | | 120.0 | 120.0 | 150.0 | 150.0 |
| 48" | | 120.0 | 120.0 | 150.0 | 150.0 |
| 54" | | 120.0 | 120.0 | 150.0 | 150.0 |
| 60" | | 113.3 | 113.3 | 150.0 | 150.0 |
| 30" | 96" | 120.0 | 120.0 | 150.0 | 150.0 |
| 36" | | 120.0 | 120.0 | 150.0 | 150.0 |
| 42" | | 120.0 | 120.0 | 150.0 | 150.0 |
| 48" | | 115.6 | 115.6 | 150.0 | 150.0 |
| 54" | | 105.3 | 105.3 | 150.0 | 150.0 |
| 60" | | 97.5 | 97.5 | 143.2 | 150.0 |
| 30" | 102" | 120.0 | 120.0 | 150.0 | 150.0 |
| 36" | | 120.0 | 120.0 | 150.0 | 150.0 |
| 42" | | 113.8 | 113.8 | 150.0 | 150.0 |
| 48" | | 101.4 | 101.4 | 148.9 | 150.0 |
| 54" | | 92.1 | 92.1 | 135.2 | 144.7 |
| 30" | 108" | 120.0 | 120.0 | 150.0 | 150.0 |
| 36" | | 116.1 | 116.1 | 150.0 | 150.0 |
| 42" | | 100.9 | 100.9 | 148.1 | 150.0 |
| 48" | | 89.7 | 89.7 | 131.7 | 141.0 |
| 30" | 114" | 120.0 | 120.0 | 150.0 | 150.0 |
| 36" | | 103.8 | 103.8 | 150.0 | 150.0 |
| 42" | | 90.1 | 90.1 | 132.3 | 141.5 |
| 48" | | 79.9 | 79.9 | 117.4 | 125.6 |
| 30" | 120" | 110.2 | 110.2 | 150.0 | 150.0 |
| 36" | | 92.9 | 92.9 | 136.4 | 146.0 |
| 42" | | 80.7 | 80.7 | 118.5 | 126.8 |
| 48" | | 71.7 | 71.7 | 105.3 | 112.7 |

NOTE:
INTERPOLATION BETWEEN WIDTHS OR HEIGHTS ALLOWED.

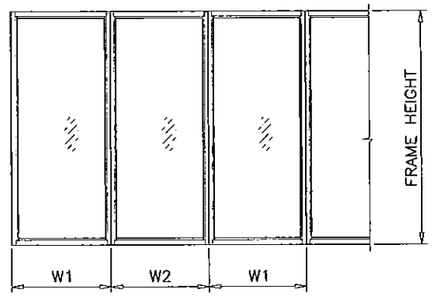


$$\text{WIDTH (W)} = \frac{W1 + W2}{2}$$

## MULLION LOAD CAPACITY – PSF
WITH INTERMEDIATE HORIZONTALS

| NOMINAL DIMS. | | MULL 'M1' | | MULL 'M2' | |
|---|---|---|---|---|---|
| WIDTH (W) | FRAME HEIGHT | EXT.(+) | INT.(–) | EXT.(+) | INT.(–) |
| 30" | 84" | 120.0 | 120.0 | 150.0 | 150.0 |
| 36" | | 120.0 | 120.0 | 150.0 | 150.0 |
| 42" | | 120.0 | 120.0 | 150.0 | 150.0 |
| 48" | | 120.0 | 120.0 | 150.0 | 150.0 |
| 54" | | 120.0 | 120.0 | 150.0 | 150.0 |
| 60" | | 111.0 | 111.0 | 150.0 | 150.0 |
| 30" | 90" | 120.0 | 120.0 | 150.0 | 150.0 |
| 36" | | 120.0 | 120.0 | 150.0 | 150.0 |
| 42" | | 120.0 | 120.0 | 150.0 | 150.0 |
| 48" | | 120.0 | 120.0 | 150.0 | 150.0 |
| 54" | | 107.4 | 107.4 | 150.0 | 150.0 |
| 60" | | 96.7 | 96.7 | 142.0 | 150.0 |
| 30" | 96" | 120.0 | 120.0 | 150.0 | 150.0 |
| 36" | | 120.0 | 120.0 | 150.0 | 150.0 |
| 42" | | 120.0 | 120.0 | 150.0 | 150.0 |
| 48" | | 106.2 | 106.2 | 150.0 | 150.0 |
| 54" | | 94.4 | 94.4 | 138.7 | 148.4 |
| 60" | | 85.0 | 85.0 | 124.8 | 133.6 |
| 30" | 102" | 120.0 | 120.0 | 150.0 | 150.0 |
| 36" | | 120.0 | 120.0 | 150.0 | 150.0 |
| 42" | | 107.5 | 107.5 | 150.0 | 150.0 |
| 48" | | 94.1 | 94.1 | 138.2 | 147.9 |
| 54" | | 83.6 | 83.6 | 122.8 | 131.5 |
| 30" | 108" | 120.0 | 120.0 | 150.0 | 150.0 |
| 36" | | 111.9 | 111.9 | 150.0 | 150.0 |
| 42" | | 95.9 | 95.9 | 140.9 | 150.0 |
| 48" | | 83.9 | 83.9 | 123.3 | 131.9 |
| 30" | 114" | 120.0 | 120.0 | 150.0 | 150.0 |
| 36" | | 100.4 | 100.4 | 147.5 | 150.0 |
| 42" | | 86.1 | 86.1 | 126.4 | 135.3 |
| 48" | | 75.3 | 75.3 | 110.6 | 118.4 |
| 30" | 120" | 107.7 | 107.7 | 150.0 | 150.0 |
| 36" | | 89.8 | 89.8 | 131.9 | 141.1 |
| 42" | | 77.0 | 77.0 | 113.0 | 121.0 |
| 48" | | 67.3 | 67.3 | 98.9 | 105.9 |

NOTE:
INTERPOLATION BETWEEN WIDTHS OR HEIGHTS ALLOWED.

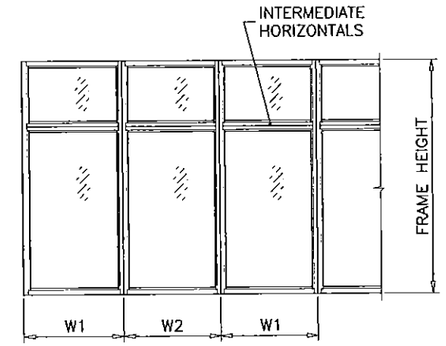


$$\text{WIDTH (W)} = \frac{W1 + W2}{2}$$

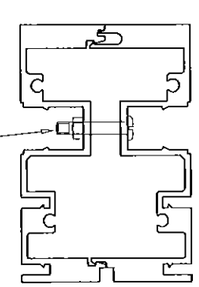


MULLION 'M1'

| Ix IN^4 | Sx IN^3 |
|---|---|
| 10.7569 | 4.5803 |

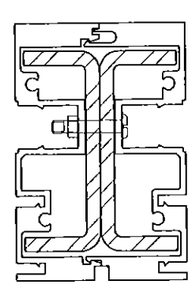

MULLION 'M2'

| | Ix IN^4 | Sx IN^3 |
|---|---|---|
| ALUMINUM | 10.7569 | 4.5803 |
| STEEL | 4.4132 | 2.5218 |
| TOTAL<br>Ix ALUM + Ix STL X 2.9 | 23.5552 | |

MULLIONS

Engr: JAVAD AHMAD
CIVIL
FLA. PE # 70592
C.A.N. 3538
JUN 10 2015

PRODUCT REVISED
as complying with the Florida
Building Code.
Acceptance No 15-0601.09
Expiration Date May 12, 2020
By Manuel Paez
Miami Dade Product Control


AL-FAROOQ CORPORATION
ENGINEERS & PRODUCT DEVELOPMENT
1235 S.W. 87 AVE
MIAMI, FLORIDA 33174
TEL. (305) 264-8100 FAX. (305) 262-6978


STORE\W09-45CDI

WS-4500 ALUM WINDOW WALL SYSTEM (L.M.I.)


AluMex Industries, LLc.
9220 Palm River Road, #102
Tampa, FL. 33619
TEL. (813) 744-5117 FAX. (813) 744-5118


revisions:

| no | date | by | description |
|---|---|---|---|
| A | 04.16.10 | | REV. PER BCCO COMMENTS |
| B | 04.02.13 | | UPDATED TO 2010 FBC, NAME REV. |
| C | 05.06.13 | | REV. PER RER COMMENTS |
| D | 08.15.13 | | NO CHANGE THIS SHEET |
| E | 06.08.15 | | UPDATED TO 2014 FBC |

date: 09-02-09
scale: –
dr. by: HAMID
chk. by:

drawing no.
W09-45

## ANCHOR LOAD CAPACITY - PSF
EXT.(+) & INT.(-)

| NOMINAL DIMS. | | ANCHORS TYPE 'A' | | | ANCHORS TYPE 'B' | | | ANCHORS TYPE 'C' | | |
|---|---|---|---|---|---|---|---|---|---|---|
| WIDTH (W) | FRAME HEIGHT | A2 | A3 | A4 | B2 | B3 | B4 | C2 | C3 | C4 |
| 30" | 84" | 117.9 | 150.0 | 150.0 | 150.0 | 150.0 | 150.0 | 150.0 | 150.0 | 150.0 |
| 36" | | 98.3 | 147.4 | 150.0 | 148.6 | 150.0 | 150.0 | 150.0 | 150.0 | 150.0 |
| 42" | | 84.2 | 126.4 | 150.0 | 127.3 | 150.0 | 150.0 | 150.0 | 150.0 | 150.0 |
| 48" | | 73.7 | 110.6 | 147.4 | 111.4 | 150.0 | 150.0 | 136.9 | 150.0 | 150.0 |
| 54" | | 65.5 | 98.3 | 131.0 | 99.0 | 148.6 | 150.0 | 121.7 | 150.0 | 150.0 |
| 60" | | 59.0 | 88.5 | 117.9 | 89.1 | 133.7 | 150.0 | 109.5 | 150.0 | 150.0 |
| 30" | 90" | 110.1 | 150.0 | 150.0 | 150.0 | 150.0 | 150.0 | 150.0 | 150.0 | 150.0 |
| 36" | | 91.7 | 137.6 | 150.0 | 138.7 | 150.0 | 150.0 | 150.0 | 150.0 | 150.0 |
| 42" | | 78.6 | 117.9 | 150.0 | 118.9 | 150.0 | 150.0 | 146.0 | 150.0 | 150.0 |
| 48" | | 68.8 | 103.2 | 137.6 | 104.0 | 150.0 | 150.0 | 127.7 | 150.0 | 150.0 |
| 54" | | 61.2 | 91.7 | 122.3 | 92.4 | 138.7 | 150.0 | 113.5 | 150.0 | 150.0 |
| 60" | | 55.0 | 82.6 | 110.1 | 83.2 | 124.8 | 150.0 | 102.2 | 150.0 | 150.0 |
| 30" | 96" | 103.2 | 150.0 | 150.0 | 150.0 | 150.0 | 150.0 | 150.0 | 150.0 | 150.0 |
| 36" | | 86.0 | 129.0 | 150.0 | 130.0 | 150.0 | 150.0 | 150.0 | 150.0 | 150.0 |
| 42" | | 73.7 | 110.6 | 147.4 | 111.4 | 150.0 | 150.0 | 136.9 | 150.0 | 150.0 |
| 48" | | 64.5 | 96.8 | 129.0 | 97.5 | 146.3 | 150.0 | 119.8 | 150.0 | 150.0 |
| 54" | | 57.3 | 86.0 | 114.7 | 86.7 | 130.0 | 150.0 | 106.4 | 150.0 | 150.0 |
| 60" | | 51.6 | 77.4 | 103.2 | 78.0 | 117.0 | 150.0 | 95.8 | 150.0 | 150.0 |
| 30" | 102" | 97.1 | 145.7 | 150.0 | 146.8 | 150.0 | 150.0 | 150.0 | 150.0 | 150.0 |
| 36" | | 80.9 | 121.4 | 150.0 | 122.4 | 150.0 | 150.0 | 150.0 | 150.0 | 150.0 |
| 42" | | 69.4 | 104.1 | 138.8 | 104.9 | 150.0 | 150.0 | 128.8 | 150.0 | 150.0 |
| 48" | | 60.7 | 91.1 | 121.4 | 91.8 | 137.6 | 150.0 | 112.7 | 150.0 | 150.0 |
| 54" | | 54.0 | 80.9 | 107.9 | 81.6 | 122.4 | 150.0 | 100.2 | 150.0 | 150.0 |
| 30" | 108" | 91.7 | 137.6 | 150.0 | 138.7 | 150.0 | 150.0 | 150.0 | 150.0 | 150.0 |
| 36" | | 76.4 | 114.7 | 150.0 | 115.6 | 150.0 | 150.0 | 141.9 | 150.0 | 150.0 |
| 42" | | 65.5 | 98.3 | 131.0 | 99.0 | 148.6 | 150.0 | 121.7 | 150.0 | 150.0 |
| 48" | | 57.3 | 86.0 | 114.7 | 86.7 | 130.0 | 150.0 | 106.4 | 150.0 | 150.0 |
| 30" | 114" | 86.9 | 130.4 | 150.0 | 131.4 | 150.0 | 150.0 | 150.0 | 150.0 | 150.0 |
| 36" | | 72.4 | 108.6 | 144.8 | 109.5 | 150.0 | 150.0 | 134.5 | 150.0 | 150.0 |
| 42" | | 62.1 | 93.1 | 124.2 | 93.8 | 140.8 | 150.0 | 115.2 | 150.0 | 150.0 |
| 48" | | 54.3 | 81.5 | 108.6 | 82.1 | 123.2 | 150.0 | 100.8 | 150.0 | 150.0 |
| 30" | 120" | 82.6 | 123.8 | 150.0 | 124.8 | 150.0 | 150.0 | 150.0 | 150.0 | 150.0 |
| 36" | | 68.8 | 103.2 | 137.6 | 104.0 | 150.0 | 150.0 | 127.7 | 150.0 | 150.0 |
| 42" | | 59.0 | 88.5 | 117.9 | 89.1 | 133.7 | 150.0 | 109.5 | 150.0 | 150.0 |
| 48" | | 51.6 | 77.4 | 103.2 | 78.0 | 117.0 | 150.0 | 95.8 | 143.7 | 150.0 |

NOTE:
INTERPOLATION BETWEEN WIDTHS OR HEIGHTS ALLOWED.

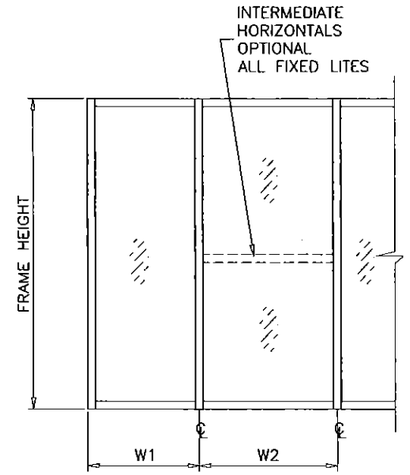


$$\text{WIDTH (W)} = \frac{W1 + W2}{2}$$

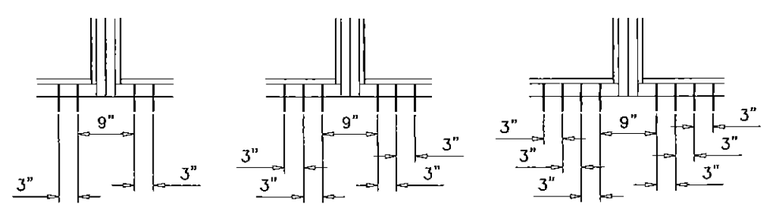


**ANCHORS TYPES:** SEE SHEET 6 FOR DESCRIPTION

A2 = (2) ANCHORS TYPE 'A' AT EACH SIDE OF MULLION
B2 = (2) ANCHORS TYPE 'B' AT EACH SIDE OF MULLION
C2 = (2) ANCHORS TYPE 'C' AT EACH SIDE OF MULLION

A3 = (3) ANCHORS TYPE 'A' AT EACH SIDE OF MULLION
B3 = (3) ANCHORS TYPE 'B' AT EACH SIDE OF MULLION
C3 = (3) ANCHORS TYPE 'C' AT EACH SIDE OF MULLION

A4 = (4) ANCHORS TYPE 'A' AT EACH SIDE OF MULLION
B4 = (4) ANCHORS TYPE 'B' AT EACH SIDE OF MULLION
C4 = (4) ANCHORS TYPE 'C' AT EACH SIDE OF MULLION

ANCHORS

Engr: JAVAD AHMAD
CIVIL
FLA. PE # 70592
C.A.N. 3538
JUN 10 2015

PRODUCT REVISED
as complying with the Florida
Building Code
Acceptance No 15-0601.09
Expiration Date May 14, 2020
By Manuel Perez
Miami Dade Product Control


AL-FAROOQ CORPORATION
ENGINEERS & PRODUCT DEVELOPMENT
1235 S.W. 87 AVE
MIAMI, FLORIDA 33174
TEL. (305) 264-8100 FAX. (305) 262-6978
STORE\W09-45CDI


WS-4500 ALUM WINDOW WALL SYSTEM (L.M.I.)

AluMex Industries, LLc.
9220 Palm River Road, #102
Tampa, FL. 33619
TEL. (813) 744-5117 FAX. (813) 744-5118

revisions:

| no | date | by | description |
|---|---|---|---|
| A | 04.16.10 | | NO CHANGE THIS SHEET |
| B | 04.02.13 | | UPDATED TO 2010 FBC, NAME REV. |
| C | 06.06.13 | | REV. PER RER COMMENTS |
| D | 08.15.13 | | NO CHANGE THIS SHEET |
| E | 06.08.15 | | NO CHANGE THIS SHEET |

date: 09-02-09
scale: -
dr. by: HAMID
chk. by:

drawing no.
W09-45

| DOOR MULLION LOAD CAPACITY-PSF | | | |
|---|---|---|---|
| SIDELITE WIDTH INCHES | FRAME HEIGHT INCHES | MULL 'DM1' | |
| | | EXT.(+) | INT.(−) |
| 30 | 102 | 120.0 | 120.0 |
| 36 | | 120.0 | 120.0 |
| 42 | | 120.0 | 120.0 |
| 48 | | 120.0 | 120.0 |
| 54 | | 120.0 | 120.0 |
| 30 | 108 | 120.0 | 120.0 |
| 36 | | 120.0 | 120.0 |
| 42 | | 120.0 | 120.0 |
| 48 | | 120.0 | 120.0 |
| 30 | 114 | 120.0 | 120.0 |
| 36 | | 120.0 | 120.0 |
| 42 | | 120.0 | 120.0 |
| 48 | | 114.4 | 114.4 |
| 30 | 120 | 119.3 | 119.3 |
| 36 | | 111.9 | 111.9 |
| 42 | | 105.4 | 105.4 |
| 48 | | 99.6 | 99.6 |

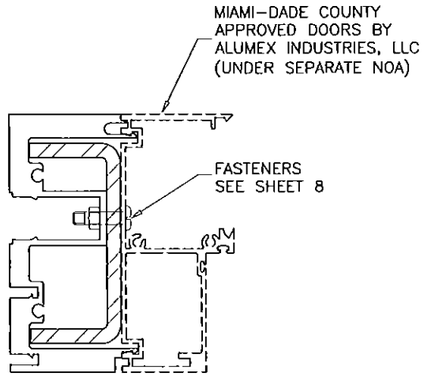


DOOR MULLION 'DM1'

MULLION ADAPTER INCLUDED IN PROPERTIES.

| | Ix IN^4 | Sx IN^3 |
|---|---|---|
| ALUMINUM | 10.9984 | 4.6719 |
| STEEL | 2.5744 | 1.4711 |
| TOTAL Ix ALUM + Ix STL X 2.9 | 18.4642 | |

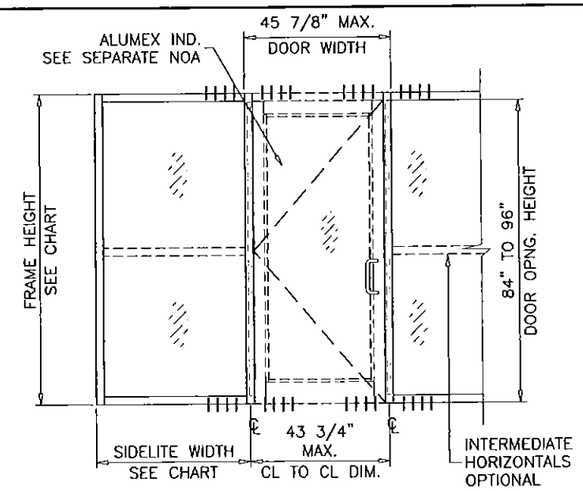


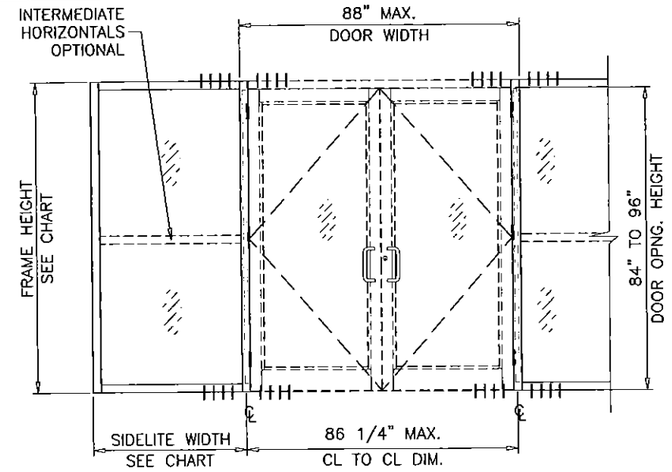


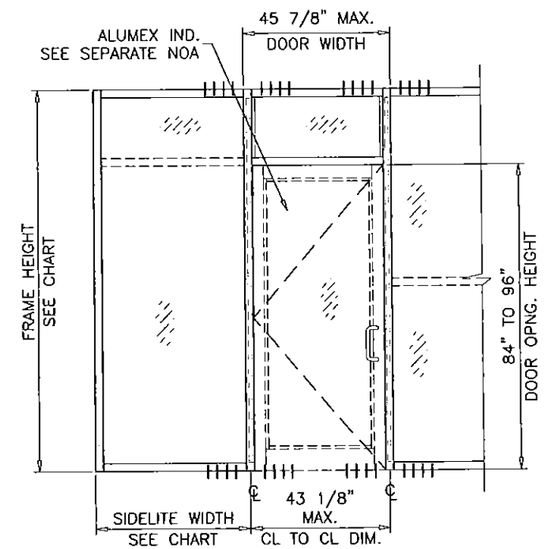


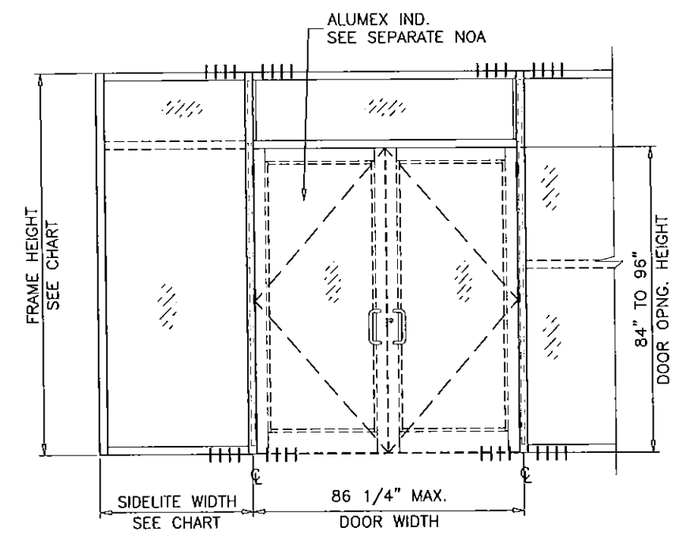


| DOOR MULLION ANCHOR LOAD CAPACITY - PSF EXT.(+) & INT.(−) | | | | | | | |
|---|---|---|---|---|---|---|---|
| NOMINAL DIMS. | | ANCHORS TYPE 'A' | | ANCHORS TYPE 'B' | | ANCHORS TYPE 'C' | |
| SIDELITE WIDTH | FRAME HEIGHT | A3 | A4 | B3 | B4 | C3 | C4 |
| 30" | 102" | 90.2 | 120.0 | 118.4 | 120.0 | 120.0 | 120.0 |
| 36" | | 85.6 | 114.2 | 112.4 | 120.0 | 120.0 | 120.0 |
| 42" | | 81.5 | 108.6 | 107.0 | 120.0 | 120.0 | 120.0 |
| 48" | | 77.7 | 103.6 | 102.0 | 120.0 | 120.0 | 120.0 |
| 54" | | 74.3 | 99.0 | 97.5 | 120.0 | 120.0 | 120.0 |
| 30" | 108" | 86.9 | 115.9 | 114.1 | 120.0 | 120.0 | 120.0 |
| 36" | | 82.4 | 109.9 | 108.2 | 120.0 | 120.0 | 120.0 |
| 42" | | 78.3 | 104.4 | 102.9 | 120.0 | 120.0 | 120.0 |
| 48" | | 74.6 | 99.5 | 98.0 | 120.0 | 120.0 | 120.0 |
| 30" | 114" | 83.9 | 111.8 | 110.1 | 120.0 | 120.0 | 120.0 |
| 36" | | 79.4 | 105.9 | 104.3 | 120.0 | 120.0 | 120.0 |
| 42" | | 75.4 | 100.6 | 99.0 | 120.0 | 120.0 | 120.0 |
| 48" | | 71.8 | 95.8 | 94.3 | 120.0 | 115.8 | 120.0 |
| 30" | 120" | 81.0 | 108.0 | 106.4 | 120.0 | 120.0 | 120.0 |
| 36" | | 76.6 | 102.2 | 100.6 | 120.0 | 120.0 | 120.0 |
| 42" | | 72.7 | 97.0 | 95.5 | 120.0 | 117.3 | 120.0 |
| 48" | | 69.2 | 92.3 | 90.9 | 120.0 | 111.6 | 120.0 |

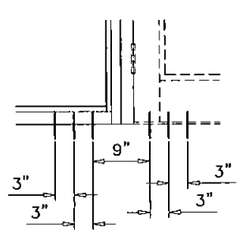


A3, B3, C3

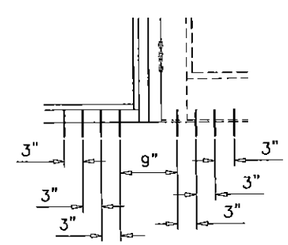


A4, B4

ANCHORS TYPES: SEE SHEET 6 FOR DESCRIPTION

A3 = (3) ANCHORS TYPE 'A' AT EACH SIDE OF MULLION
B3 = (3) ANCHORS TYPE 'B' AT EACH SIDE OF MULLION
C3 = (3) ANCHORS TYPE 'C' AT EACH SIDE OF MULLION

A4 = (4) ANCHORS TYPE 'A' AT EACH SIDE OF MULLION
B4 = (4) ANCHORS TYPE 'B' AT EACH SIDE OF MULLION

Engr: JAVAD AHMAD
CIVIL
FLA. PE # 70592
C.A.N. 3558

JUN 10 2015

PRODUCT REVISED
as complying with the Florida
Building Code
Acceptance No 15-0601.09
Expiration Date May 12, 2020
By Manuel Perez
Miami Dade Product Control

# DOOR-WINDOW WALL TRANSITION MULLION


AL-FAROOQ CORPORATION
ENGINEERS & PRODUCT DEVELOPMENT
1235 S.W. 87 AVE
MIAMI, FLORIDA 33174
TEL. (305) 264-8100 FAX. (305) 262-6978


STORE\W09-45CDI

WS-4500 ALUM WINDOW WALL SYSTEM (L.M.I.)


AluMex Industries, LLC.
9220 Palm River Road, #102
Tampa, FL. 33619
TEL. (813) 744-5117 FAX. (813) 744-5118


revisions:

| no | date | by | description |
|---|---|---|---|
| A | 04.16.10 | | REV. PER BCCO COMMENTS |
| B | 04.02.13 | | UPDATED TO 2010 FBC. NAME REV. |
| C | 06.06.13 | | REV. PER RER COMMENTS |
| D | 08.15.13 | | REV. PER RER COMMENTS |
| E | 06.08.15 | | NO CHANGE THIS SHEET |

date: 09-02-09
scale: –
dr. by: HAMID
chk. by:

drawing no.
W09-45

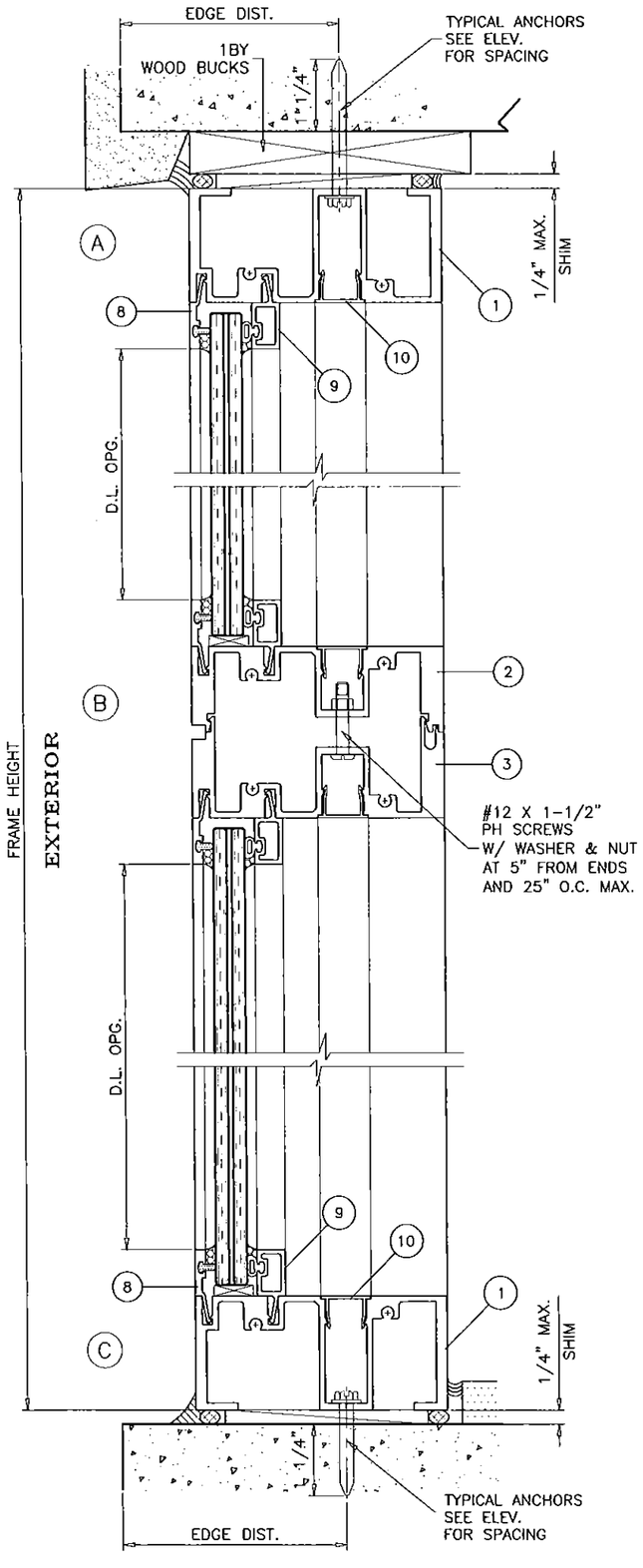


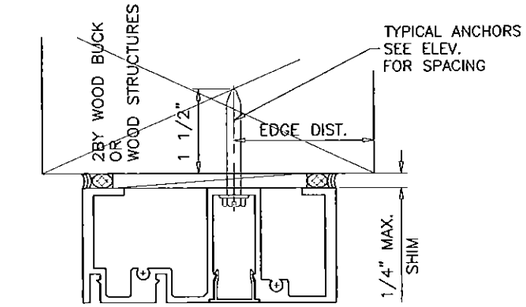


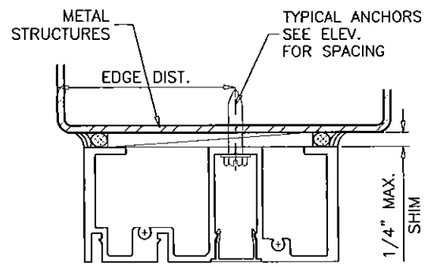


WOOD BUCKS AND METAL STRUCTURES NOT BY ALUMEX IND. MUST SUPPORT LOADS IMPOSED BY GLAZING SYSTEM AND TRANSFER THEM TO THE BUILDING STRUCTURE.

## TYPICAL ANCHORS: SEE ELEV. FOR SPACING

**TYPE 'A'**

**1/4" DIA ULTRACON BY 'ELCO'** (Fu=177 KSI, Fy=155 KSI)
INTO 2BY WOOD BUCKS OR WOOD STRUCTURES
1-1/2" MIN. PENETRATION INTO WOOD (HEAD/SILL/JAMBS)

THRU 1BY BUCKS INTO CONC. OR MASONRY
1-1/4" MIN. EMBED INTO CONCRETE (HEAD/SILL)
1-1/4" MIN. EMBED INTO CONC. OR MASONRY (JAMBS)

DIRECTLY INTO MASONRY
1-1/4" MIN. EMBED INTO CONC. OR MASONRY (JAMBS)

**ANCHOR EDGE DISTANCES**
INTO CONCRETE AND MASONRY = 2-1/2" MIN.
INTO WOOD STRUCTURE = 1" MIN.

**TYPE 'B'**

**1/4" DIA ULTRACON BY 'ELCO'** (Fu=177 KSI, Fy=155 KSI)
DIRECTLY INTO CONCRETE
WITH 1-1/4" MIN. EMBED INTO CONC.

**ANCHOR EDGE DISTANCES**
INTO CONCRETE = 3" MIN.

**TYPE 'C'**

**#14 SMS OR SELF DRILLING SCREWS ST/ST** (GRADE 2 CRS)
INTO METAL STRUCTURES
STEEL : 1/8" THK. MIN. (Fy = 36 KSI MIN.)
ALUMINUM : 1/8" THK. MIN. (6063-T5 MIN.)
(STEEL IN CONTACT WITH ALUMINUM TO BE PLATED OR PAINTED)

**ANCHOR EDGE DISTANCES**
INTO METAL STRUCTURE = 1/2" MIN.

**WOOD AT HEAD, SILL OR JAMBS SG = 0.55 MIN.**
**CONCRETE AT HEAD, SILL OR JAMBS f'c = 3000 PSI MIN.**
**C-90 HOLLOW/FILLED BLOCK AT JAMBS f'm = 2000 PSI MIN.**

## SEALANTS:

ALL FRAME CORNERS, JOINTS, MULLION SEAMS AND PERIMETER OF GLAZING BEAD TO FRAME SEALED WITH DOW CORNING 795 SEALANT.

Engr: JAVAD AHMAD
CIVIL
FLA. PE # 70592
C.A.N. 3538
JUN 1 0 2015

PRODUCT REVISED
as complying with the Florida Building Code
Acceptance No 15-0601.09
Expiration Date May 12 2020
By Manuel Perez
Miami Dade Product Control


**AL-FAROOQ CORPORATION**
ENGINEERS & PRODUCT DEVELOPMENT
1235 S.W. 87 AVE
MIAMI, FLORIDA 33174
TEL. (305) 264-8100 FAX. (305) 262-6978


STORE\W09-45CDI

WS-4500 ALUM WINDOW WALL SYSTEM (L.M.I.)


AluMex Industries, LLc.
9220 Palm River Road, #102
Tampa, FL. 33619
TEL. (813) 744-5118 FAX. (813) 744-5117


revisions:

| no | date | by | description |
|---|---|---|---|
| A | 04.15.10 | | REV. PER BCCO COMMENTS |
| B | 04.02.13 | | UPDATED TO 2010 FBC, NAME REV. |
| C | 06.06.13 | | REV. PER RER COMMENTS |
| D | 08.15.13 | | NO CHANGE THIS SHEET |
| E | 06.08.15 | | UPDATED TO 2014 FBC |

date: 09-02-09
scale: 3/8" = 1"
dr. by: HAMID
chk. by:

drawing no.
W09-45

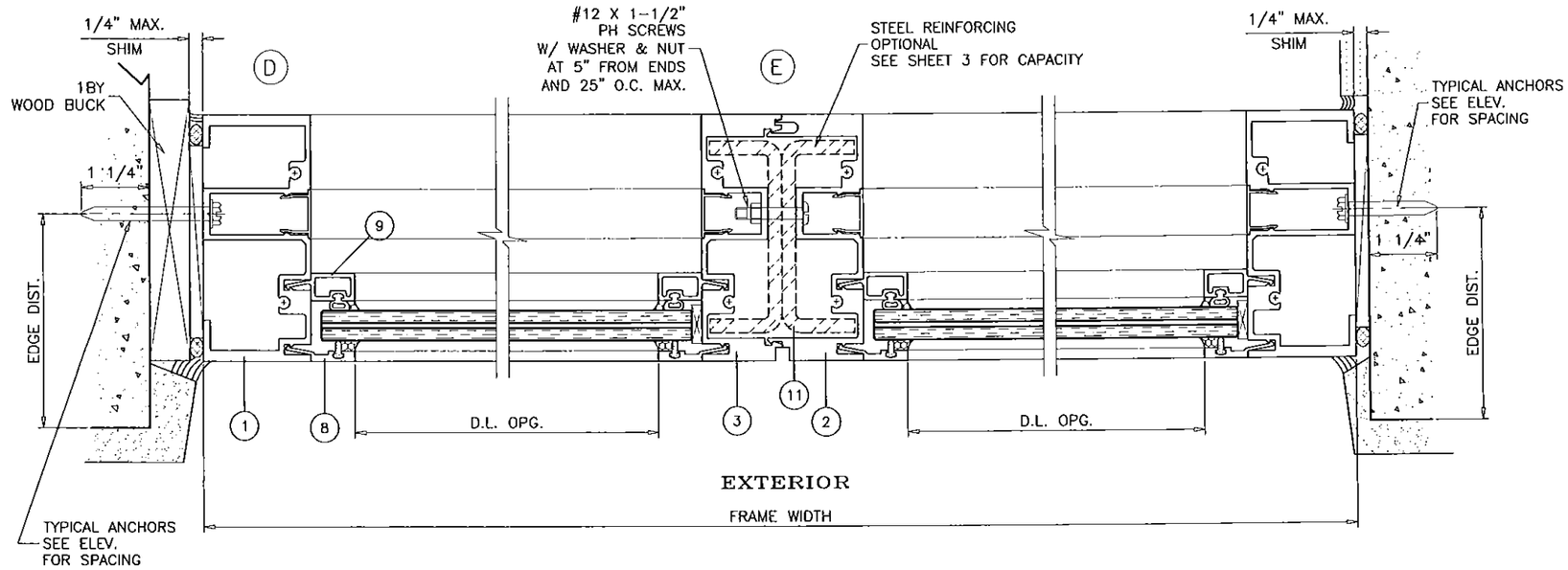


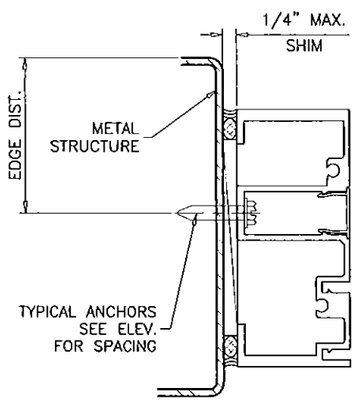


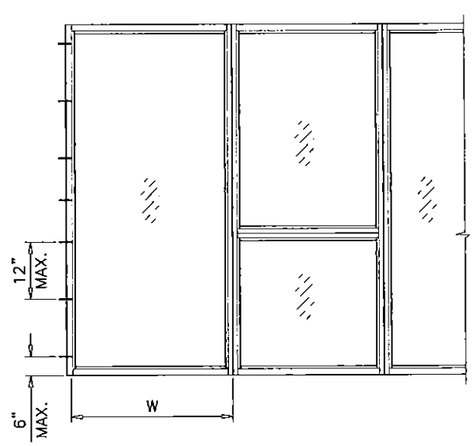


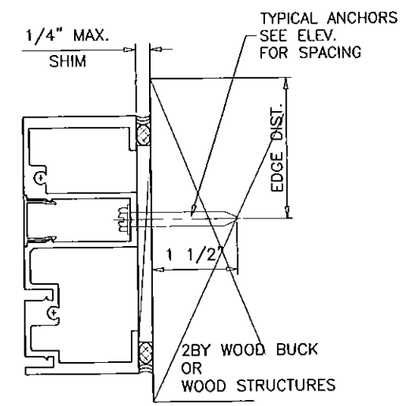


| JAMB ANCHORS DESIGN LOAD CAPACITY – PSF | | | |
|---|---|---|---|
| WIDTH (W) | TYPE 'A' EXT.(+) INT.(–) | TYPE 'B' EXT.(+) INT.(–) | TYPE 'C' EXT.(+) INT.(–) |
| 30" | 150.0 | 150.0 | 150.0 |
| 36" | 150.0 | 150.0 | 150.0 |
| 42" | 147.4 | 150.0 | 150.0 |
| 48" | 129.0 | 150.0 | 150.0 |
| 54" | 114.7 | 150.0 | 150.0 |
| 60" | 103.2 | 150.0 | 150.0 |

Engr: JAVAD AHMAD
CIVIL
FLA. PE # 70592
C.A.N. 3538

JUN 10 2015

PRODUCT REVISED
as complying with the Florida
Building Code
Acceptance No 15-0601.12
Expiration Date May 12, 2020
By Manuel Perez
Miami Dade Product Control


AL-FAROOQ CORPORATION
ENGINEERS & PRODUCT DEVELOPMENT
1235 S.W. 87 AVE
MIAMI, FLORIDA 33174
TEL. (305) 264-8100 FAX. (305) 262-6978


STORE\W09-45CDI

WS-4500 ALUM WINDOW WALL SYSTEM (L.M.I.)


AluMex Industries, LLc.
9220 Palm River Road, #102
Tampa, FL. 33619
TEL. (813) 744-5117 FAX. (813) 744-5118


revisions:

| no | date | by | description |
|---|---|---|---|
| A | 04.16.10 | | NO CHANGE THIS SHEET |
| B | 04.02.13 | | UPDATED TO 2010 FBC, NAME REV. |
| C | 06.06.13 | | REV. PER RER COMMENTS |
| D | 08.15.13 | | NO CHANGE THIS SHEET |
| E | 06.08.15 | | UPDATED TO 2014 FBC |

date: 09-02-09
scale: 3/8" = 1"
dr. by: HAMID
chk. by:

drawing no.
W09-45

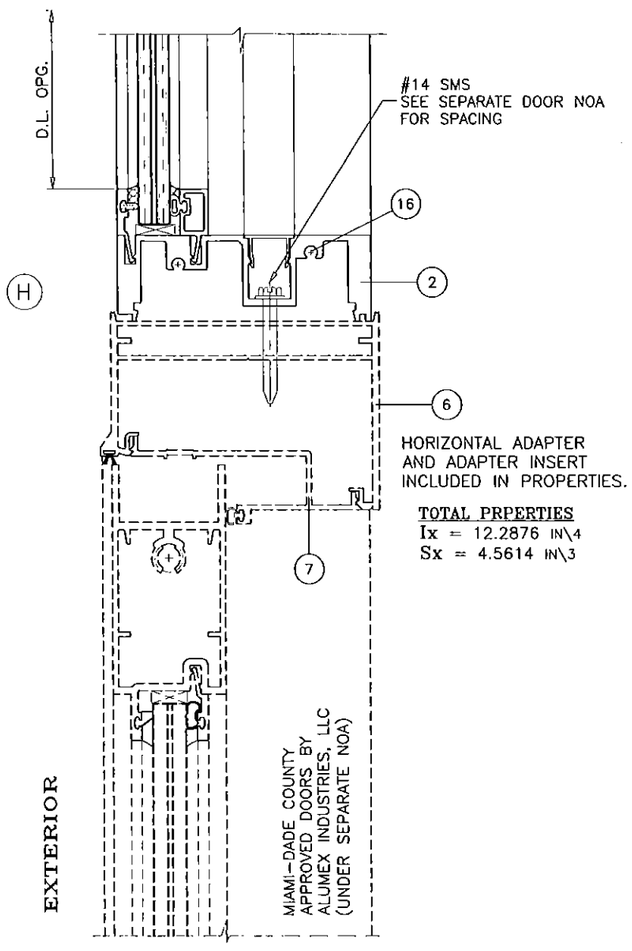


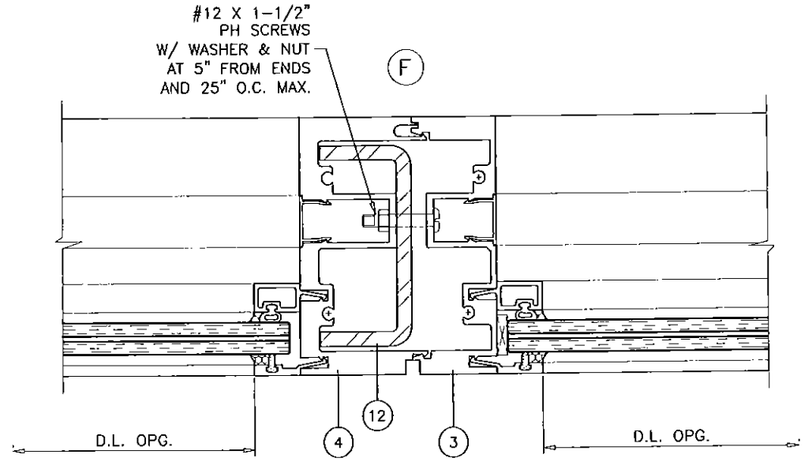


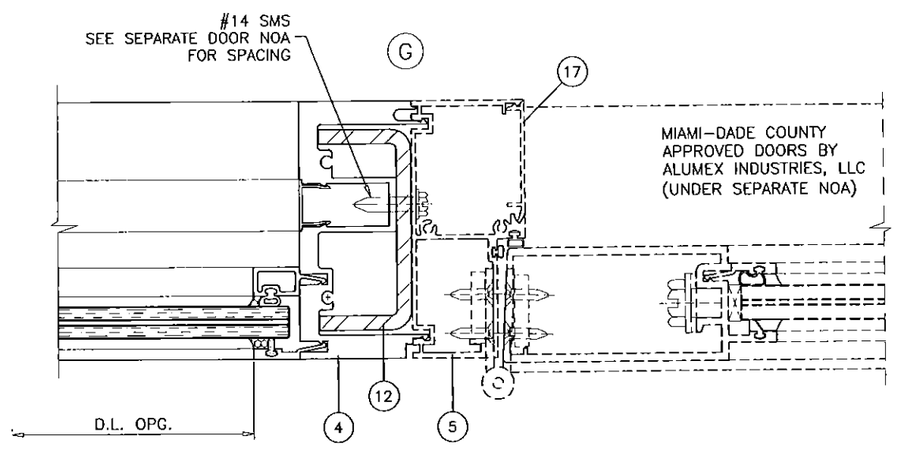


SEE SEPARATE NOA FOR DOOR DETAILS, DESIGN LOAD CAPACITY AND DOOR ANCHORS. LOWER VALUES FROM DOORS NOA OR STOREFRONT SYSTEM CAPACITY CHARTS WILL APPLY TO ENTIRE SYSTEM.

Engr: JAVAD AHMAD
CIVIL
FLA. PE # 70592
C.A.N. 2538

JUN 19 2015

PRODUCT REVISED
as complying with the Florida
Building Code
Acceptance No 15-0601.09
Expiration Date May 12, 2020
By
Miami-Dade Product Control


AL-FAROOQ CORPORATION
ENGINEERS & PRODUCT DEVELOPMENT
1235 S.W. 87 AVE
MIAMI, FLORIDA 33174
TEL. (305) 264-8100 FAX. (305) 262-6978


STORE\W09-45CDI

WS-4500 ALUM WINDOW WALL SYSTEM (L.M.I.)


AluMex Industries, LLC.
9220 Palm River Road, #102
Tampa, FL. 33619
TEL. (813) 744-5117 FAX. (813) 744-5118


revisions:

| no | date | by | description |
|---|---|---|---|
| A | 04.16.10 | | REV. PER BCCO COMMENTS |
| B | 04.02.13 | | UPDATED TO 2010 FBC, NAME REV. |
| C | 06.06.13 | | REV. PER RER COMMENTS |
| D | 08.15.13 | | REV. PER RER COMMENTS |
| E | 06.08.15 | | NO CHANGE THIS SHEET |

date: 09-02-09
scale: 3/8" = 1"
dr. by: HAMID
chk. by:

drawing no.
W09-45

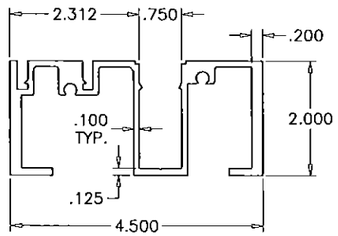


1 FRAME HEAD/SILL/JAMB

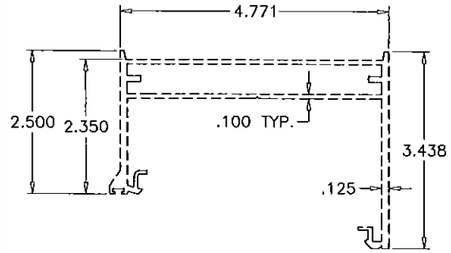


6 DOOR HORIZONTAL ADAPTER

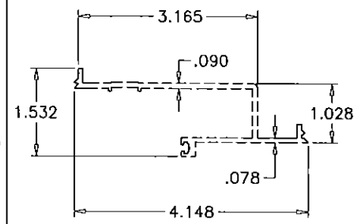


7 DOOR ADAPTER INSERT

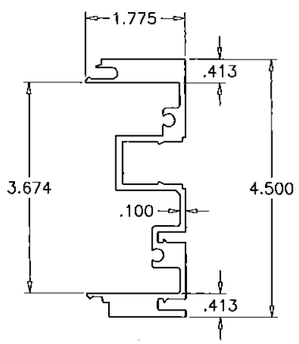


2 MALE MULLION/HORIZONTAL

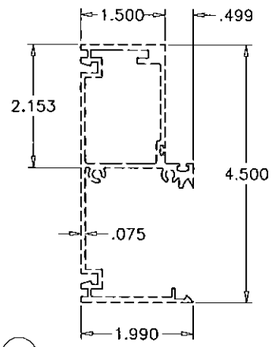


5 DOOR MULLION ADAPTER

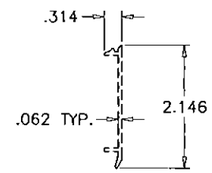


17 DOOR MULLION ADAPTER COVER

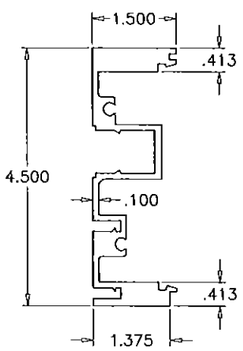


3 FEMALE MULLION/HORIZONTAL

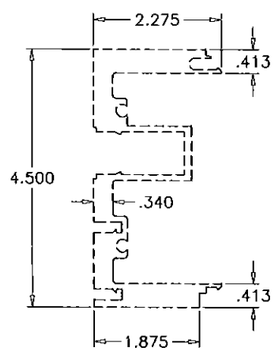


4 DOOR MULLION

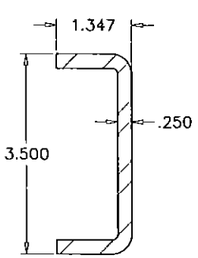


11 MULLION REINFORCING

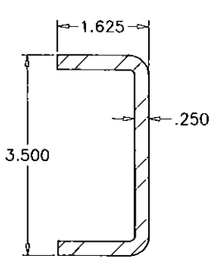


12 DOOR MULLION REINFORCING

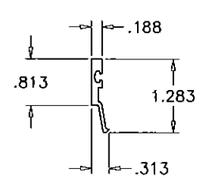


8 EXTERIOR GLAZING BEAD

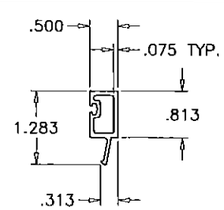


9 INTERIOR GLAZING BEAD

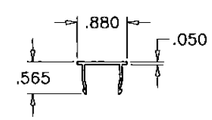


10 FRAME COVER

| ITEM NO. | PART NUMBER | QUANTITY | DESCRIPTION | MATERIAL | MANF./SUPPLIER/REMARKS |
|---|---|---|---|---|---|
| 1 | BA 5566 | AS REQD. | FRAME HEAD/SILL/JAMB | 6063-T6 | – |
| 2 | BA 5564 | AS REQD. | MALE MULLION/HORIZONTAL | 6063-T6 | – |
| 3 | BA 5565 | AS REQD. | FEMALE MULLION/HORIZONTAL | 6063-T6 | – |
| * 4 | BA 5568 | AS REQD. | DOOR MULLION | 6063-T6 | – |
| * 5 | FH-04011 | AS REQD. | DOOR MULLION ADAPTER | 6063-T6 | – |
| * 6 | FH-03613 | AS REQD. | DOOR HORIZONTAL ADAPTER | 6063-T6 | – |
| * 7 | FS-01058 | AS REQD. | DOOR ADAPTER INSERT | 6063-T6 | – |
| 8 | – | AS REQD. | EXTERIOR GLAZING BEAD | 6063-T6 | – |
| 9 | – | AS REQD. | INTERIOR GLAZING BEAD | 6063-T6 | – |
| 10 | – | AS REQD. | FRAME COVER | 6063-T6 | – |
| 11 | – | AS REQD. | MULLION REINFORCING | STEEL | A36 GRADE |
| 12 | – | AS REQD. | DOOR MULLION REINFORCING | STEEL | A36 GRADE |
| 13 | – | AS REQD. | GLAZING SPACER | – | DUROMETER 75±5 |
| 14 | – | AS REQD. | BULB GASKET | VINYL | DUROMETER 75±5 |
| 15 | – | 2/ LITE | SETTING BLOCK AT 1/4 POINTS | EPDM | DUROMETER 80±5 SHORE A |
| 16 | #14 X 2" | – | ASSEMBLY SCREWS | ST/ST | PH SMS |
| * 17 | FS-01064 | – | DOOR MULLION ADAPTER COVER | 6063-T6 | – |

* NOT PART OF THIS APPROVAL

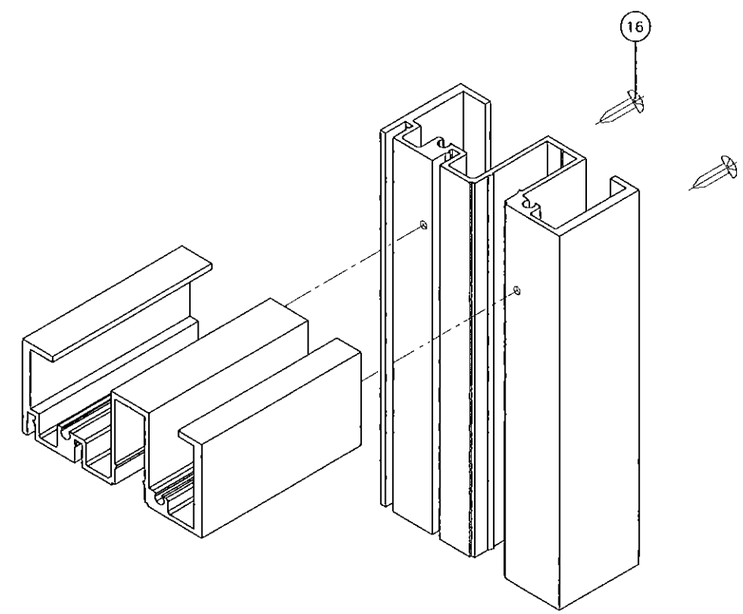


FRAME CORNERS

TYP. FOR END & INTERMEDIATE CORNERS

Engr: JAVAD AHMAD
CIVIL
FLA. PE # 70592
C.A.N. 3538

JUN 1 0 2015

PRODUCT REVISED
ns complying with the Florida
Building Code
Acceptance No 15-0601.09
Expiration Date May 12, 2020
By Manuel Perez
Miami Dade Product Control


AL-FAROOQ CORPORATION
ENGINEERS & PRODUCT DEVELOPMENT
1235 S.W. 87 AVE
MIAMI, FLORIDA 33174
TEL. (305) 264-8100 FAX. (305) 262-6978
STORE\W09-45CDI


WS-4500 ALUM WINDOW WALL SYSTEM (L.M.I.)


AluMex Industries, LLc.
9220 Palm River Road, #102
Tampa, FL. 33619
TEL. (813) 744-5117 FAX. (813) 744-5118


revisions:

| no | date | by | description |
|---|---|---|---|
| A | 04.16.10 | | REV. PER BCCO COMMENTS |
| B | 04.02.13 | | UPDATED TO 2010 FBC, NAME REV. |
| C | 06.06.13 | | REV. PER RER COMMENTS |
| D | 08.15.13 | | REV. PER RER COMMENTS |
| E | 06.08.15 | | UPDATED TO 2014 FBC |

date: 09-02-09
scale: 3/8" = 1"
dr. by: HAMID
chk. by:

drawing no.
W09-45