MIAMI-DADE COUNTY
PRODUCT CONTROL SECTION
11805 SW 26 Street, Room 208
Miami, Florida 33175-2474
T (786) 315-2590 F (786) 315-2599
www.miamidade.gov/economy

DEPARTMENT OF REGULATORY AND ECONOMIC RESOURCES (RER)
BOARD AND CODE ADMINISTRATION DIVISION

NOTICE OF ACCEPTANCE (NOA)

PCI Industries Inc d/b/a Pottorff
5101 Blue Mound Road
Fort Worth, TX 76106

SCOPE:

This NOA is being issued under the applicable rules and regulations governing the use of construction materials. The documentation submitted has been reviewed and accepted by Miami-Dade County RER-Product Control Section to be used in Miami Dade County and other areas where allowed by the Authority Having Jurisdiction (AHJ).

This NOA shall not be valid after the expiration date stated below. The Miami-Dade County Product Control Section (In Miami Dade County) and/or the AHJ (in areas other than Miami Dade County) reserve the right to have this product or material tested for quality assurance purposes. If this product or material fails to perform in the accepted manner, the manufacturer will incur the expense of such testing and the AHJ may immediately revoke, modify, or suspend the use of such product or material within their jurisdiction. RER reserves the right to revoke this acceptance, if it is determined by Miami-Dade County Product Control Section that this product or material fails to meet the requirements of the applicable building code.

This product is approved as described herein, and has been designed to comply with the Florida Building Code, including the High Velocity Hurricane Zone.

DESCRIPTION: Model ECV-645-MD Aluminum Louver

APPROVAL DOCUMENT: Drawing No. **ECV-645-MD NOA**, titled "ECV-645-MD", sheets 1 through 15 of 15, dated 08/27/2013, with revision 5 dated 10/13/2014, prepared by the manufacturer, signed and sealed by Wayne K. Helmila, P.E., bearing the Miami-Dade County Product Control revision stamp with the Notice of Acceptance number and expiration date by the Miami-Dade County Product Control Section.

MISSILE IMPACT RATING: Large and Small Missile Impact Resistant

LABELING: Each unit shall bear a permanent label with the manufacturer's name or logo, city, state, model/series, and following statement: "Miami-Dade County Product Control Approved", unless otherwise noted herein.

RENEWAL of this NOA shall be considered after a renewal application has been filed and there has been no change in the applicable building code negatively affecting the performance of this product.

TERMINATION of this NOA will occur after the expiration date or if there has been a revision or change in the materials, use, and/or manufacture of the product or process. Misuse of this NOA as an endorsement of any product, for sales, advertising or any other purposes shall automatically terminate this NOA. Failure to comply with any section of this NOA shall be cause for termination and removal of NOA.

ADVERTISEMENT: The NOA number preceded by the words Miami-Dade County, Florida, and followed by the expiration date may be displayed in advertising literature. If any portion of the NOA is displayed, then it shall be done in its entirety.

INSPECTION: A copy of this entire NOA shall be provided to the user by the manufacturer or its distributors and shall be available for inspection at the job site at the request of the Building Official.

This NOA **revises NOA # 14-0605.11** and consists of this page 1 and evidence page E-1, as well as approval document mentioned above.

The submitted documentation was reviewed by **Carlos M. Utrera, P.E.**

MIAMI-DADE COUNTY APPROVED

08/07/2015

NOTICE OF ACCEPTANCE: EVIDENCE SUBMITTED

A. DRAWINGS ***"Submitted under NOA # 14-0605.11"***

1. Drawing No. **ECV-645-MD NOA**, titled "ECV-645-MD", sheets 1 through 15 of 15, dated 08/27/2013, with revision 5 dated 10/13/2014, prepared by the manufacturer, signed and sealed by Wayne K. Helmila, P.E.

B. TESTS ***"Submitted under NOA # 14-0605.11"***

1. Test reports on 1) Uniform Static Air Pressure Test, Loading per FBC, TAS 202-94
   2) Large Missile Impact Test per FBC, TAS 201-94
   3) Cyclic Wind Pressure Loading per FBC, TAS 203-94

   along with installation diagram of Model ECV-645-MD Aluminum Louvers, prepared by Architectural Testing, Inc, Test Report No. **C8134.01-801-18**, dated 02/24/2014, signed and sealed by Vinu J. Abraham, P.E.
2. Test Report on High Velocity Wind Driven Rain Resistance per AMCA 550 of a Model ECV-645 Aluminum Louver, prepared by Architectural Testing, Inc, Test Report No. **C3038.02-801-44,** dated 11/02/2012, signed and sealed by Vinu J. Abraham, P.E.

C. CALCULATIONS ***"Submitted under NOA # 14-0605.11"***

1. ECV-545-MD louver structural calculations prepared by Rice Engineering, dated 10/22/2014, signed and sealed by Wayne K. Helmila, P.E.
2. ECV-545-MD louver calculations prepared by Rice Engineering, dated 05/15/2014, signed and sealed by L. David Rice, P.E.

D. QUALITY ASSURANCE

1. Miami-Dade Department of Regulatory and Economic Resources (RER)

E. MATERIAL CERTIFICATIONS ***"Submitted under NOA # 14-0605.11"***

1. Test report on impact test per AMCA 540 of a Model ECV-645-MD Aluminum Louver, prepared by Architectural Testing, Inc, Test Report No. **C6155.01-801-18**, dated 10/21/2013, signed and sealed by Vinu J. Abraham, P.E.

F. STATEMENTS

1. Statement letter of code conformance to the 5th edition (2014) FBC issued by Rice Engineering, dated 05/22/2015, signed and sealed by L. David Rice, P.E.

   "Submitted under NOA # 14-0605.11"
2. No financial interest letter issued by Rice Engineering, dated 05/14/2014, signed and sealed by L. David Rice, P.E.

08/07/2015

Carlos M. Utrera, P.E.
Product Control Examiner
NOA No. 15-0602.03
Expiration Date: January 22, 2020
Approval Date: August 13, 2015

NOTES:

1. THIS NOA DRAWING INCLUDES INSTALLATION DETAILS TO ATTAIN MAXIMUM DESIGN PRESSURES OF 150 PSF AS TESTED IN ACCORDANCE WITH PROTOCOLS TAS 201, TAS 202, TAS 203, AMCA 540, & AMCA 550 FOR USE WITHIN HIGH VELOCITY HURRICANE-AFFECTED ZONES DEFINED BY THE FLORIDA BUILDING CODE.
2. ALL VARIATIONS ARE LARGE MISSILE IMPACT RESISTANT.
3. UNITS OF MEASURE ARE IN FRACTIONAL INCHES UNLESS OTHERWISE SPECIFIED.
4. IT IS ASSUMED THAT THE LOUVER SYSTEMS DO NOT SUPPORT ANY LOADS TRANSFERRED FROM THE BUILDING CONDITION.
5. IT IS ASSUMED THAT THE BUILDING CONDITIONS ARE ADEQUATELY DESIGNED TO SUPPORT LOADS IMPARTED BY THE LOUVER SYSTEM.
6. TO PREVENT GALVANIC CORROSION, ELECTROCHEMICALLY DISSIMILAR MATERIALS IN CONTACT WITH ONE ANOTHER SHALL BE PROTECTED BY PAINT, GASKETING OR OTHER MEANS PER THE FLORIDA BUILDING CODE.
7. OTHER BUILDING CONDITIONS THAN THOSE DENOTED CAN BE UTILIZED IF ANALYZED AND APPROVED BY A PROFESSIONAL ENGINEER.
8. MULTI-SECTION WIDE AND HIGH LOUVER SYSTEMS ARE ALLOWABLE PROVIDED THE INDIVIDUAL SECTIONS ARE SUPPORTED PER THE DETAILS ON THIS DRAWING AND A SUITABLE SUPPORT STRUCTURE IS ANALYZED AND APPROVED BY A PROFESSIONAL ENGINEER.

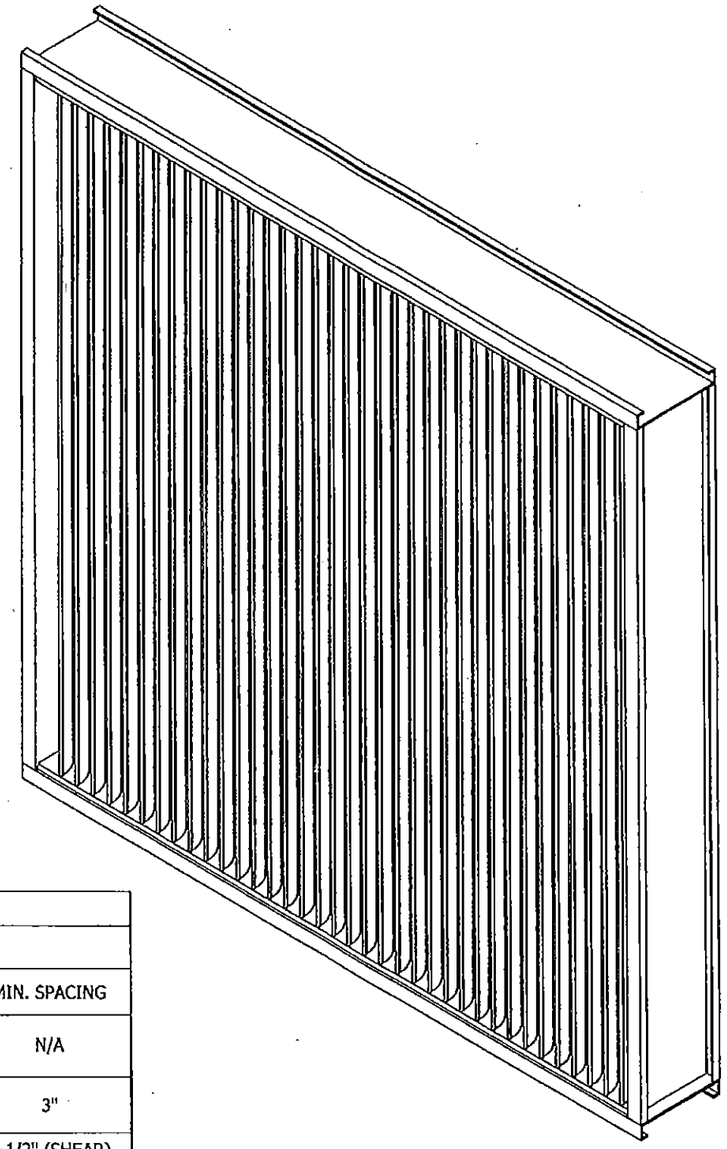

TABLE 1		
SINGLE SECTION SIZE LIMITATIONS		
MAX DESIGN PRESSURE	MIN (W X H)	MAX (W X H)
150 PSF	13 X 6-1/2	60 X 120

TABLE 2	
MULTIPLE SECTION SIZE LIMITATIONS (MAX DESIGN PRESSURE: 150 PSF)	
SINGLE SECTION HIGH - UNLIMITED WIDTH	SEE SHEETS 11 & 12

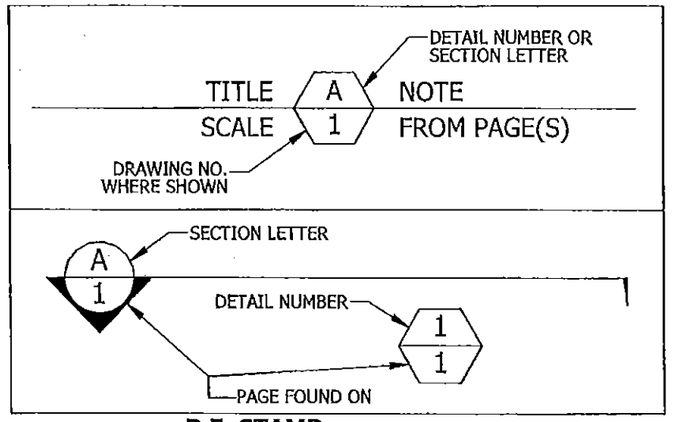

TABLE 3				
ANCHOR SCHEDULE				
SUBSTRATE	ANCHOR TYPE	MIN. EMBEDMENT	MIN. EDGE DISTANCE	MIN. SPACING
STEEL (12 GA MIN. THICKNESS Fy = 30 KSI MIN.)	#12-14 X 1" SELF-DRILLING TEK MACHINE SCREW (F-7)	FULL	3/8"	N/A
WOOD (S.G. = 0.43 MIN.)	1/2" X 3-1/2" LAG BOLT WITH FLAT WASHER (F-9)	3"	2-1/2"	3"
CONCRETE (f'c = 2000 PSI MIN.)	1/2" X 5-1/2" HILTI KWIK-BOLT TZ EXPANSION ANCHOR (F-10)	3-1/4"	2-7/8" (SHEAR) 2-1/8" (TENSION)	6-1/2" (SHEAR) 9-1/2" (TENSION)
GROUT-FILLED CMU (f'm = 1500 PSI MIN.)	5/8" X 5-1/2" HILTI KWIK-BOLT III EXPANSION ANCHOR (F-8)	4"	4"	9-1/2"

PRODUCT REVISED
as complying with the Florida Building Code
Acceptance No 15-0602.03
Expiration Date 01/22/2020
By
Miami Dade Product Control

Approved as complying with the Florida Building Code
Date 01/22/2015
NOA# 14-0605.11
Miami Dade Product Control
By

P.E. STAMP

WAYNE K. HELMILA
LICENSED
No. 59092
STATE OF FLORIDA
PROFESSIONAL ENGINEER
OCT 22 2014

RICE ENGINEERING
105 School Creek Trail
Luxemburg, WI 54217
Phone: 920-845-1042
Fax: 920-845-1048
www.rice-inc.com
Florida Firm No: F-01000005061
Certificate of Authorization: #9090
Wayne K. Helmila
Registration No: 59092

REV.	DESCRIPTION	DATE	DRAWN BY
5	CHANGED LOUVER MATERIAL TO 6063-T6	10/13/2014	NW
4	REVISED PER MIAMI DADE COUNTY	8/22/2014	JG
3	REVISED PER RICE MARKUPS	4/23/2014	JG
2	REVISED INSTALLATION DETAILS	1/27/2014	JG
1	INITIAL RELEASE	8/26/2013	LGH

UNLESS OTHERWISE SPECIFIED DIMENSION ARE IN INCHES.

TOLERANCE UNLESS NOTED:
X.X ±0.030
X.XX ±0.015
X.XXX ±0.010
ANGLE ±1°
FRACTION ±1/16

MAX HOLE BREAKOUT: 15% OF MATERIAL THICKNESS

5101 Blue Mound Road
Fort Worth, Texas 76106
Phone: 817-509-2300
Fax: 817-831-3110

THIRD ANGLE PROJECTION

PCI INDUSTRIES DOING BUSINESS AS
POTTORFF®

DRAWING DESCR: COVER SHEET
PROJECT: ECV-645-MD
LOCATION:
CUSTOMER:
PROJ. MGR:
DRAWN BY: LGH
DATE: 8/27/2013
CHK'D BY: NW
SHEET: 1 of 15
SCALE: NONE
ORDER NUMBER
P.O. NUMBER
DRAWING NUMBER
ECV-645-MD NOA

I:\0 ENGINEERING PROJECTS\LOUVERS\NO SO ECV-645MD NOA Creation\Submittal Documents\REV. 5\NOA ECV-645-MD Drawing - POTTORFF REV. 5\

GENERAL LOUVER ASSEMBLY

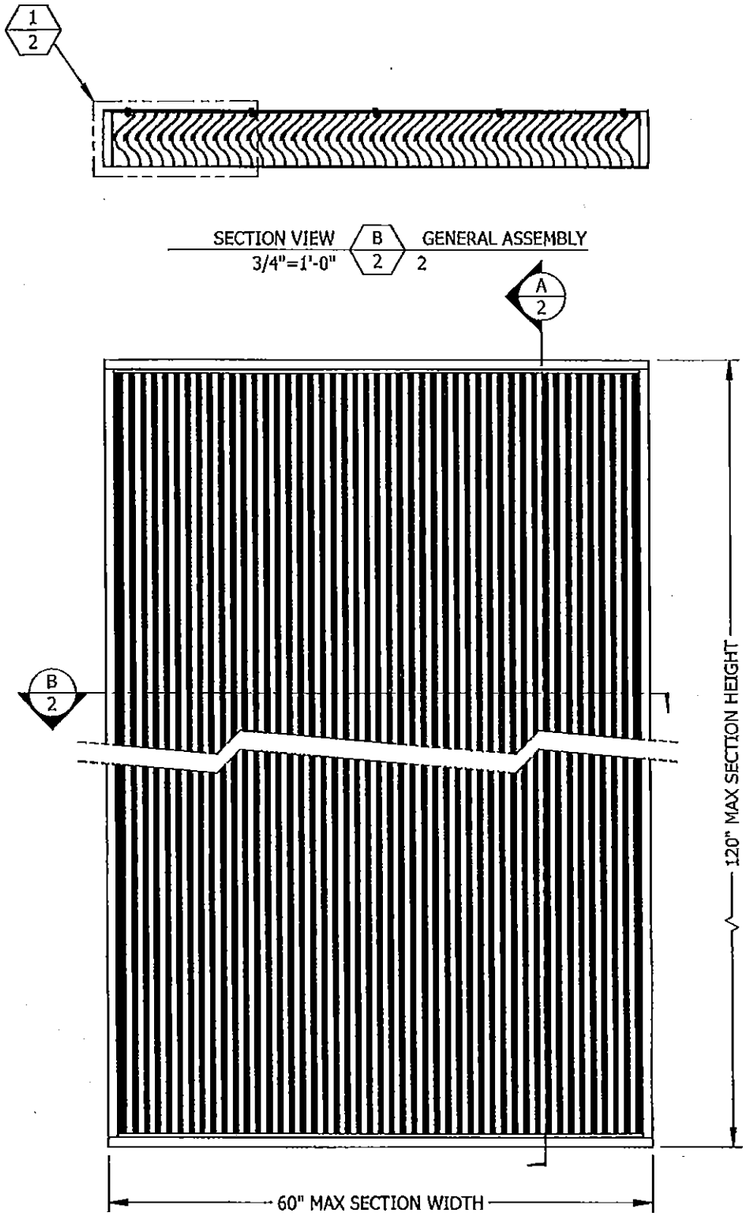

SECTION VIEW (B/2) GENERAL ASSEMBLY 2
3/4"=1'-0"

EXTERIOR ELEVATION

Approved as complying with the Florida Building Code
Date 01/22/2015
NOA# 14-0605.11
Miami Dade Product Control
By

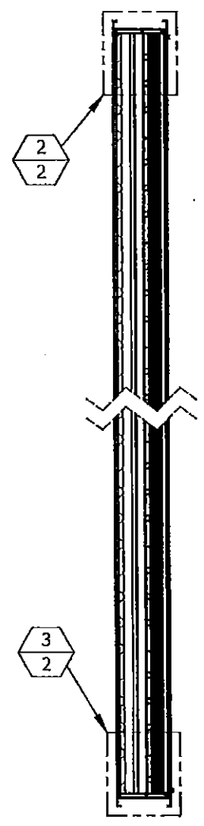

SECTION VIEW (A/2) GENERAL ASSEMBLY 2
3/4"=1'-0"

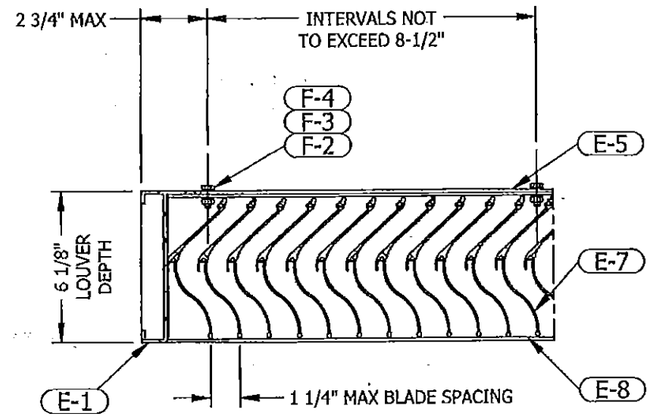

CONSTRUCTION (1/2) DETAIL 2
2-1/4"=1'-0"

IN FLANGED CONFIGURATIONS:
E-2 WILL BE USED IN PLACE OF E-1
E-6 WILL BE USED IN PLACE OF E-5

PRODUCT REVISED
as complying with the Florida Building Code
Acceptance No 15-0607.03
Expiration Date 01/22/2020
By
Miami Dade Product Control

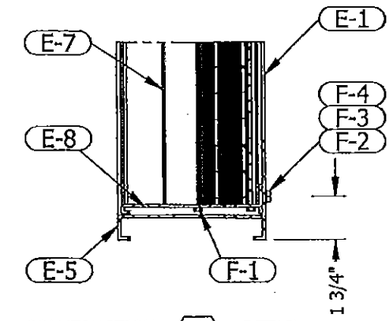

CONSTRUCTION (3/2) DETAIL 2
2-1/4"=1'-0"

IN FLANGED CONFIGURATIONS:
E-2 WILL BE USED IN PLACE OF E-1
E-6 WILL BE USED IN PLACE OF E-5

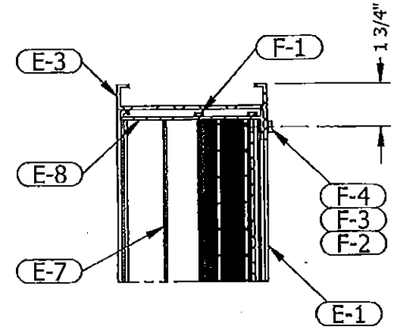

CONSTRUCTION (2/2) DETAIL 2
2-1/4"=1'-0"

IN FLANGED CONFIGURATIONS:
E-2 WILL BE USED IN PLACE OF E-1
E-4 WILL BE USED IN PLACE OF E-3

P.E. STAMP

WAYNE K. HELMILA
LICENSED
No. 59092
STATE OF FLORIDA
PROFESSIONAL ENGINEER

OCT 22 2014

RICE ENGINEERING
105 School Creek Trail
Luxemburg, WI 54217
Phone: 920-845-1042
Fax: 920-845-1048
www.rice-inc.com

Florida Firm No: F-01000005061
Certificate of Authorization: #9090
Wayne K. Helmila
Registration No: 59092

REV.	DESCRIPTION	DATE	DRAWN BY
5	CHANGED LOUVER MATERIAL TO 6063-T6	10/13/2014	NW
4	REVISED PER MIAMI DADE COUNTY	8/22/2014	JG
3	REVISED PER RICE MARKUPS	4/23/2014	JG
2	REVISED INSTALLATION DETAILS	1/27/2014	JG
1	INITIAL RELEASE	8/26/2013	LGH

UNLESS OTHERWISE SPECIFIED DIMENSION ARE IN INCHES.

TOLERANCE UNLESS NOTED:
X.X ±0.030
X.XX ±0.015
X.XXX ±0.010
ANGLE ±1°
FRACTION ±1/16

MAX HOLE BREAKOUT:
15% OF MATERIAL THICKNESS

5101 Blue Mound Road
Fort Worth, Texas 76106
Phone: 817-509-2300
Fax: 817-831-3110

THIRD ANGLE PROJECTION

PCI INDUSTRIES DOING BUSINESS AS
POTTORFF®

DRAWING DESCR: GENERAL LOUVER ASSEMBLY
PROJECT: ECV-645-MD
LOCATION:
CUSTOMER:
PROJ. MGR:
DRAWN BY: LGH
DATE: 8/27/2013
CHK'D BY: NW
SHEET: 2 of 15
SCALE: 3/4"=1'-0"
ORDER NUMBER
P.O. NUMBER
DRAWING NUMBER
ECV-645-MD NOA

I:\0 ENGINEERING PROJECTS\LOUVERS\NO SO ECV-645MD NOA Creation\Submittal Documents\REV. 5\NOA ECV-645-MD Drawing - POTTORFF REV. 5\

GENERAL LOUVER ASSEMBLY

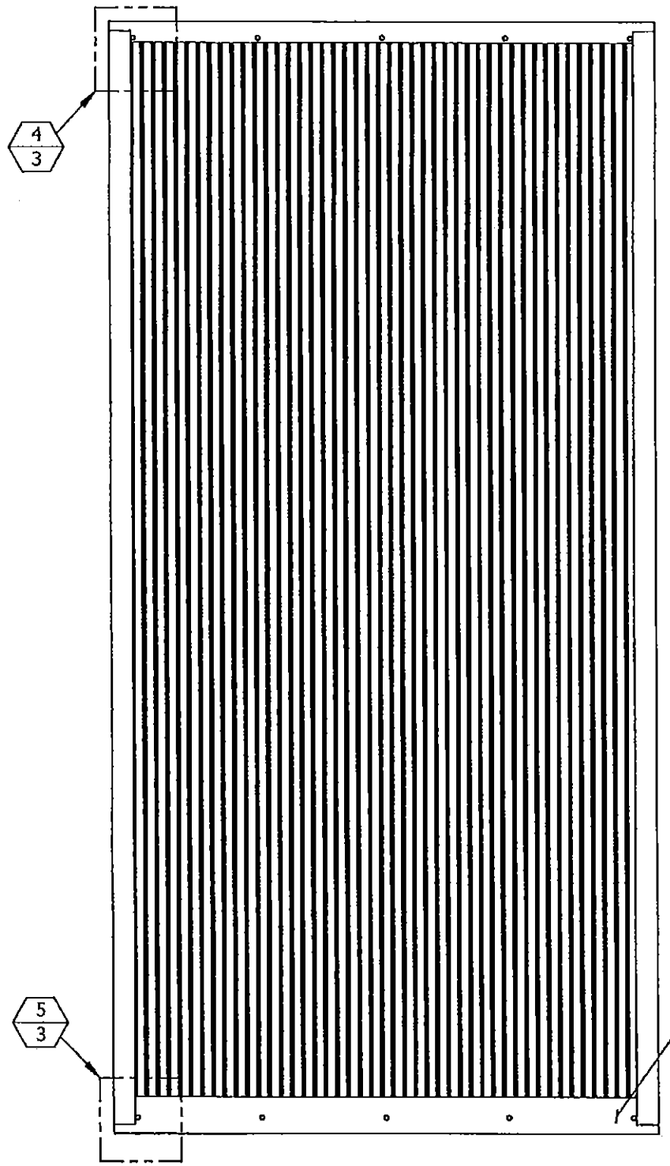

INTERIOR ELEVATION

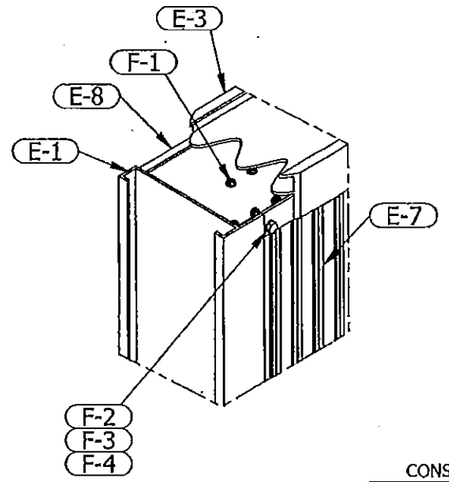

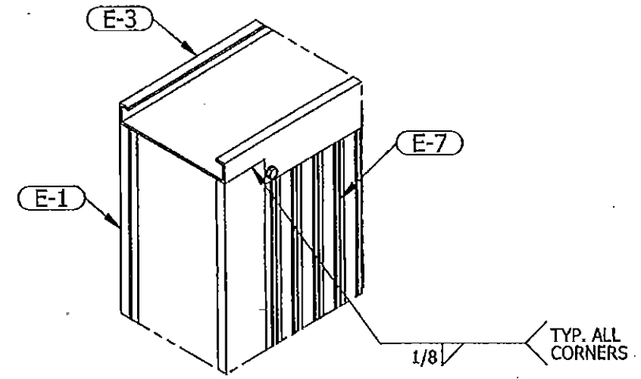

CONSTRUCTION 2-1/4" = 1'-0" | 4/3 | DETAIL 3

IN FLANGED CONFIGURATIONS:
E-2 WILL BE USED IN PLACE OF E-1
E-4 WILL BE USED IN PLACE OF E-3

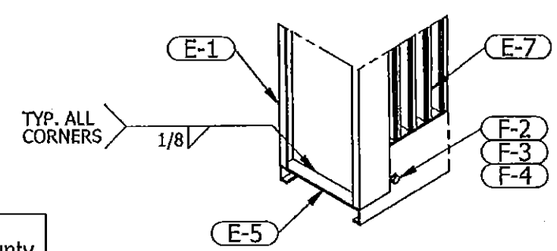

CONSTRUCTION 2-1/4"=1'-0" | 5/3 | DETAIL 3

IN FLANGED CONFIGURATIONS:
E-2 WILL BE USED IN PLACE OF E-1
E-6 WILL BE USED IN PLACE OF E-5

ENGRAVED LABEL DETAIL

PCI Industries Inc d/b/a
POTTORFF
Ft Worth TX
SO# 123456

Miami Dade County
Product Control
Approved

PRODUCT REVISED
as complying with the Florida Building Code
Acceptance No 15-0602.03
Expiration Date 01/22/2020
By
Miami Dade Product Control

Approved as complying with the Florida Building Code
Date 01/22/2015
NOA# 14-0605.11
Miami Dade Product Control
By

P.E. STAMP

WAYNE K. HELMILA
LICENSE
No. 59092
STATE OF FLORIDA
PROFESSIONAL ENGINEER

OCT 22 2014

RICE ENGINEERING
105 School Creek Trail
Luxemburg, WI 54217
Phone: 920-845-1042
Fax: 920-845-1048
www.rice-inc.com

Florida Firm No: F-01000005061
Certificate of Authorization: #9090
Wayne K. Helmila
Registration No: 59092

REV.	DESCRIPTION	DATE	DRAWN BY
5	CHANGED LOUVER MATERIAL TO 6063-T6	10/13/2014	NW
4	REVISED PER MIAMI DADE COUNTY	8/22/2014	JG
3	REVISED PER RICE MARKUPS	4/23/2014	JG
2	REVISED INSTALLATION DETAILS	1/27/2014	JG
1	INITIAL RELEASE	8/26/2013	LGH

UNLESS OTHERWISE SPECIFIED DIMENSION ARE IN INCHES.

TOLERANCE UNLESS NOTED:
X.X ±0.030
X.XX ±0.015
X.XXX ±0.010
ANGLE ±1°
FRACTION ±1/16

MAX HOLE BREAKOUT:
15% OF MATERIAL THICKNESS

5101 Blue Mound Road
Fort Worth, Texas 76106
Phone: 817-509-2300
Fax: 817-831-3110

THIRD ANGLE PROJECTION

PCI INDUSTRIES DOING BUSINESS AS
POTTORFF®

DRAWING DESCR: GENERAL LOUVER ASSEMBLY			
PROJECT: ECV-645-MD			
LOCATION:			
CUSTOMER:			
PROJ. MGR:		DRAWN BY: LGH	
DATE: 8/27/2013	CHK'D BY: NW	ORDER NUMBER / P.O. NUMBER	DRAWING NUMBER
SHEET: 3 of 15	SCALE: 3/4"=1'-0"		ECV-645-MD NOA

I:\0 ENGINEERING PROJECTS\LOUVERS\NO SO ECV-645MD NOA Creation\Submittal Documents\REV. 5\NOA ECV-645-MD Drawing - POTTORFF REV. 5\

INSTALLATION CONFIGURATION

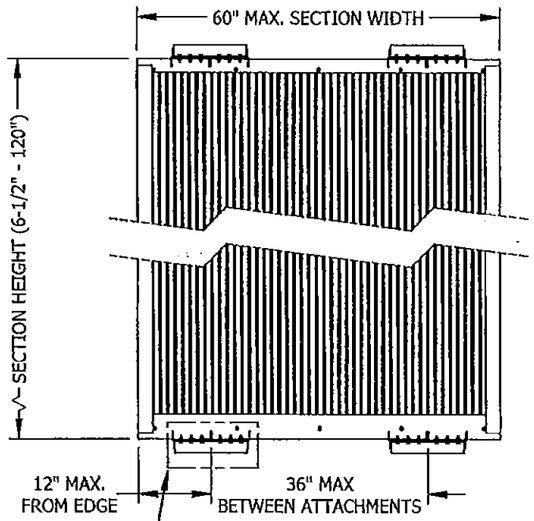

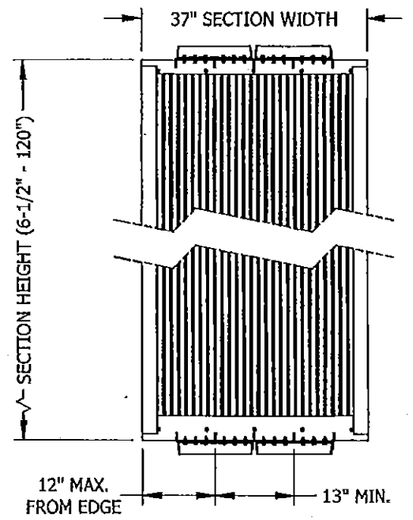

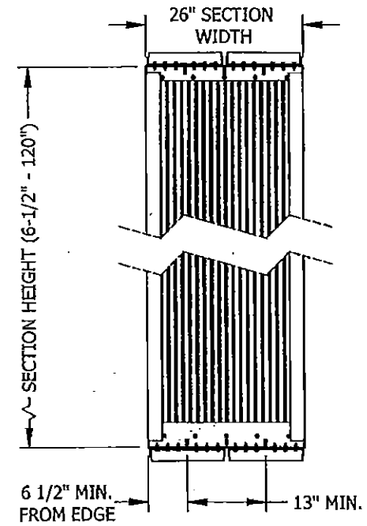

INSTALLATION CONFIGURATION FOR LOUVER SECTIONS BETWEEN 26" AND 60" WIDE
FOUR ATTACHMENT LOCATIONS TOTAL; 6-1/2 - 12" FROM EACH EDGE; 13" - 36" APART
TYPICAL FOR ALL BUILDING CONDITIONS

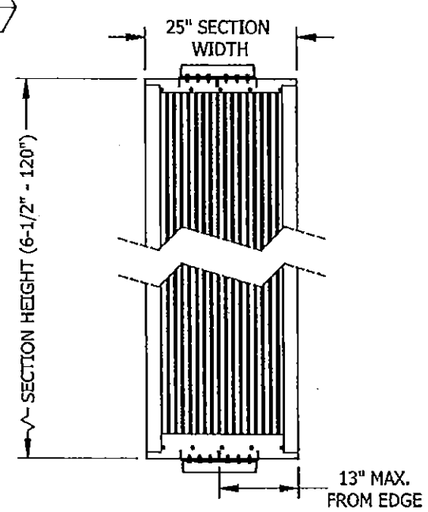

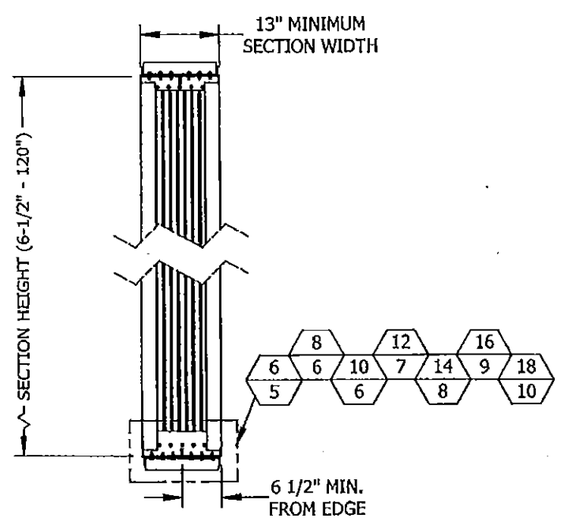

INSTALLATION CONFIGURATION FOR LOUVER SECTIONS BETWEEN 13" AND 26" WIDE
TWO ATTACHMENT LOCATIONS TOTAL; 6-1/2" - 13" FROM EACH EDGE
TYPICAL FOR ALL BUILDING CONDITIONS

PRODUCT REVISED
as complying with the Florida Building Code
Acceptance No 15-0602.03
Expiration Date 01/22/2020
By
Miami Dade Product Control

Approved as complying with the Florida Building Code
Date 01/22/2015
NOA# 14-0605.11
Miami Dade Product Control
By

P.E. STAMP

WAYNE K. HELMIA
LICENSE
No. 59092
STATE OF
FLORIDA
PROFESSIONAL ENGINEER

OCT 22 2014

RICE ENGINEERING
105 School Creek Trail
Luxemburg, WI 54217
Phone: 920-845-1042
Fax: 920-845-1048
www.rice-inc.com

Florida Firm No: F-01000005061
Certificate of Authorization: #9090
Wayne K. Helmia
Registration No: 59092

REV.	DESCRIPTION	DATE	DRAWN BY
5	CHANGED LOUVER MATERIAL TO 6063-T6	10/13/2014	NW
4	REVISED PER MIAMI DADE COUNTY	8/22/2014	JG
3	REVISED PER RICE MARKUPS	4/23/2014	JG
2	REVISED INSTALLATION DETAILS	1/27/2014	JG
1	INITIAL RELEASE	8/26/2013	LGH

UNLESS OTHERWISE SPECIFIED DIMENSION ARE IN INCHES.

TOLERANCE UNLESS NOTED:
X.X ±0.030
X.XX ±0.015
X.XXX ±0.010
ANGLE ±1°
FRACTION ±1/16

MAX HOLE BREAKOUT:
15% OF MATERIAL THICKNESS

5101 Blue Mound Road
Fort Worth, Texas 76106
Phone: 817-509-2300
Fax: 817-831-3110

THIRD ANGLE PROJECTION

PCI INDUSTRIES DOING BUSINESS AS
POTTORFF®

DRAWING DESCR: INSTALLATION CONFIGURATION
PROJECT: ECV-645-MD
LOCATION:
CUSTOMER:
PROJ. MGR:
DRAWN BY: LGH
DATE: 8/27/2013
CHK'D BY: NW
ORDER NUMBER
P.O. NUMBER
DRAWING NUMBER
SHEET: 4 of 15
SCALE: 3/4"=1'-0"
ECV-645-MD NOA

I:\0 ENGINEERING PROJECTS\LOUVERS\NO SO ECV-645MD NOA Creation\Submittal Documents\REV. 5\NOA ECV-645-MD Drawing - POTTORFF REV. 5\

SINGLE SECTION WIDE X SINGLE SECTION HIGH - STEEL CONDITION

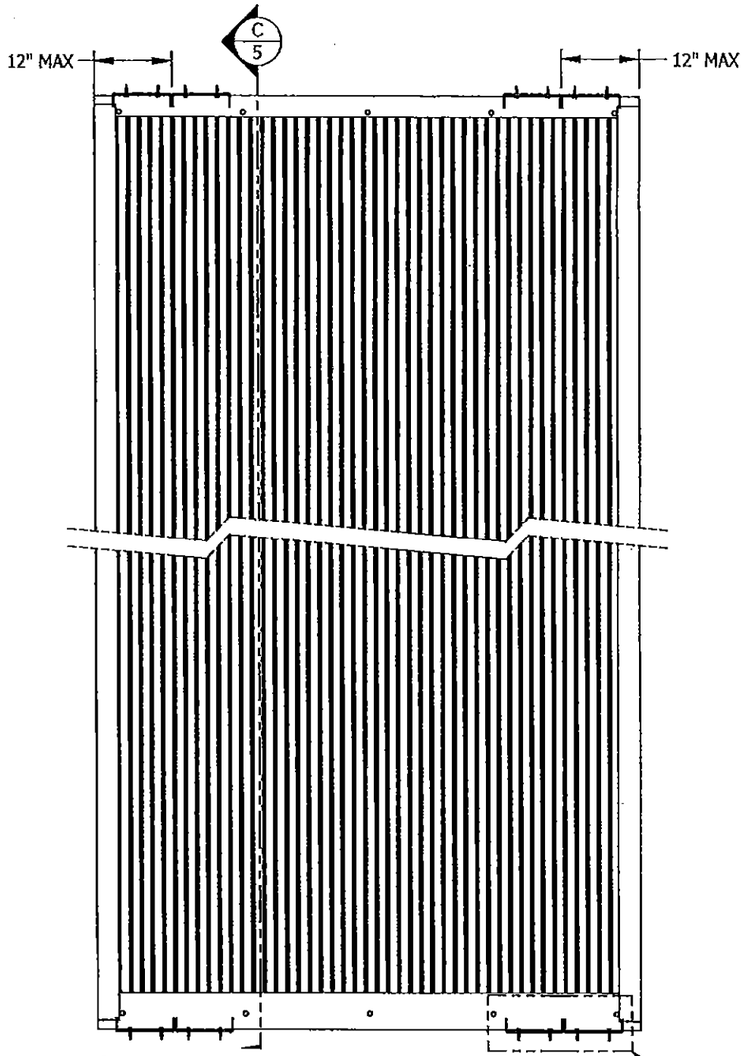

INTERIOR ELEVATION

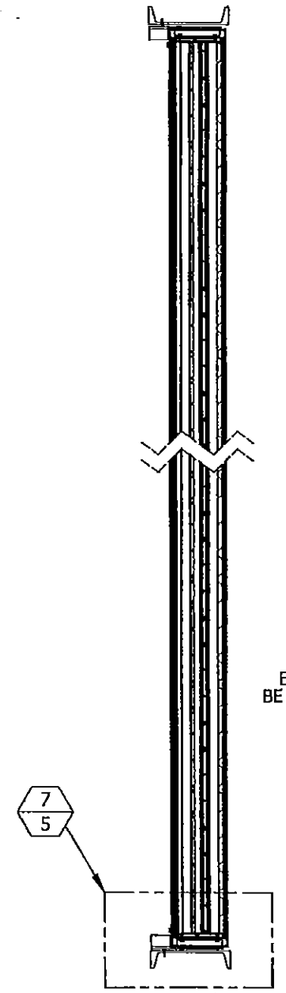

6/5 SINGLE SECTION HIGH C/5 STEEL CONDITION
3/4" = 1'-0" 5

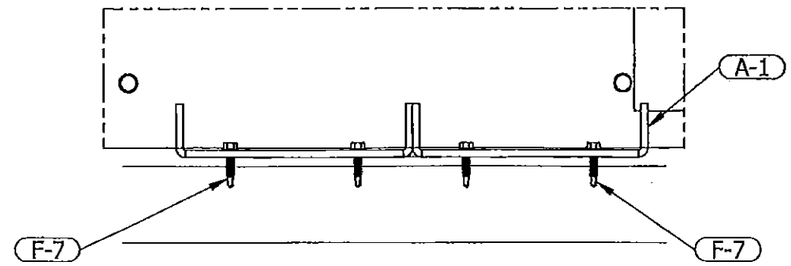

TOP & BTM MOUNT DETAIL 6/5 STEEL CONDITION
3"=1'-0" 4, 5, 11

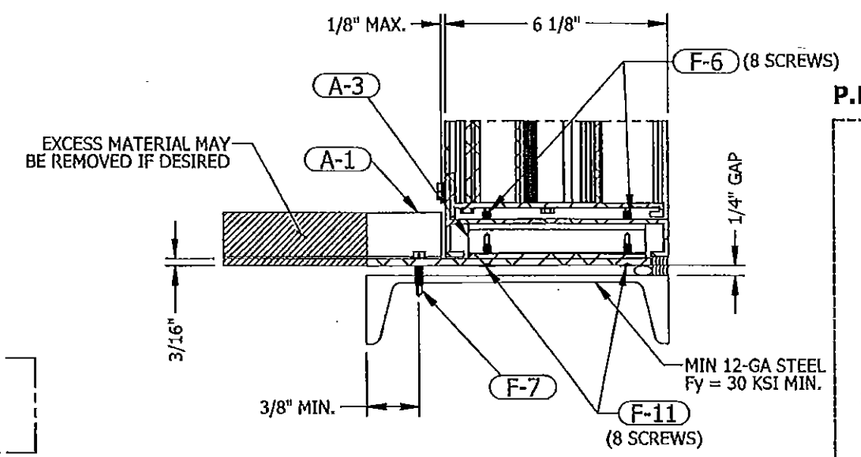

TOP & BTM MOUNT DETAIL 7/5 STEEL CONDITION
3"=1'-0" 5, 11

PRODUCT REVISED
as complying with the Florida Building Code
Acceptance No 15-0607.03
Expiration Date 01/22/2020
By
Miami Dade Product Control

Approved as complying with the Florida Building Code
Date 01/22/2015
NOA# 14-0605.11
Miami Dade Product Control
By

P.E. STAMP

WAYNE K. HELMILA
LICENSE
No. 59092
STATE OF FLORIDA
PROFESSIONAL ENGINEER

OCT 22 2014

RICE ENGINEERING
105 School Creek Trail
Luxemburg, WI 54217
Phone: 920-845-1042
Fax: 920-845-1048
www.rice-inc.com

Florida Firm No: F-01000005061
Certificate of Authorization: #9090
Wayne K. Helmila
Registration No: 59092

NOTE: THE ELEVATION VIEW INCLUDED ON THIS PAGE SHOWS THE ATTACHMENT LOCATIONS FOR A LOUVER SECTION BETWEEN 37" AND 60" WIDE. REFER TO SHEET 4 FOR ATTACHMENT LOCATIONS ON LOUVER SECTIONS LESS THAN 37" WIDE.

REV.	DESCRIPTION	DATE	DRAWN BY
5	CHANGED LOUVER MATERIAL TO 6063-T6	10/13/2014	NW
4	REVISED PER MIAMI DADE COUNTY	8/22/2014	JG
3	REVISED PER RICE MARKUPS	4/23/2014	JG
2	REVISED INSTALLATION DETAILS	1/27/2014	JG
1	INITIAL RELEASE	8/26/2013	LGH

UNLESS OTHERWISE SPECIFIED DIMENSION ARE IN INCHES.

TOLERANCE UNLESS NOTED:
X.X ±0.030
X.XX ±0.015
X.XXX ±0.010
ANGLE ±1°
FRACTION ±1/16

MAX HOLE BREAKOUT: 15% OF MATERIAL THICKNESS

5101 Blue Mound Road
Fort Worth, Texas 76106
Phone: 817-509-2300
Fax: 817-831-3110

THIRD ANGLE PROJECTION

PCI INDUSTRIES DOING BUSINESS AS

POTTORFF®

DRAWING DESCR: SINGLE SECTION WIDE X SINGLE SECTION HIGH - STEEL CONDITION
PROJECT: ECV-645-MD
LOCATION:
CUSTOMER:
PROJ. MGR:
DRAWN BY: LGH
DATE: 8/27/2013
CHK'D BY: NW
ORDER NUMBER
P.O. NUMBER
DRAWING NUMBER
SHEET: 5 of 15
SCALE: 3/4"=1'-0"
ECV-645-MD NOA

I:\0 ENGINEERING PROJECTS\LOUVERS\NO SO ECV-645MD NOA.Creation\Submittal Documents\REV. 5\NOA ECV-645-MD Drawing - POTTORFF REV. 5\

SINGLE SECTION WIDE X SINGLE SECTION HIGH - CONCRETE CONDITION

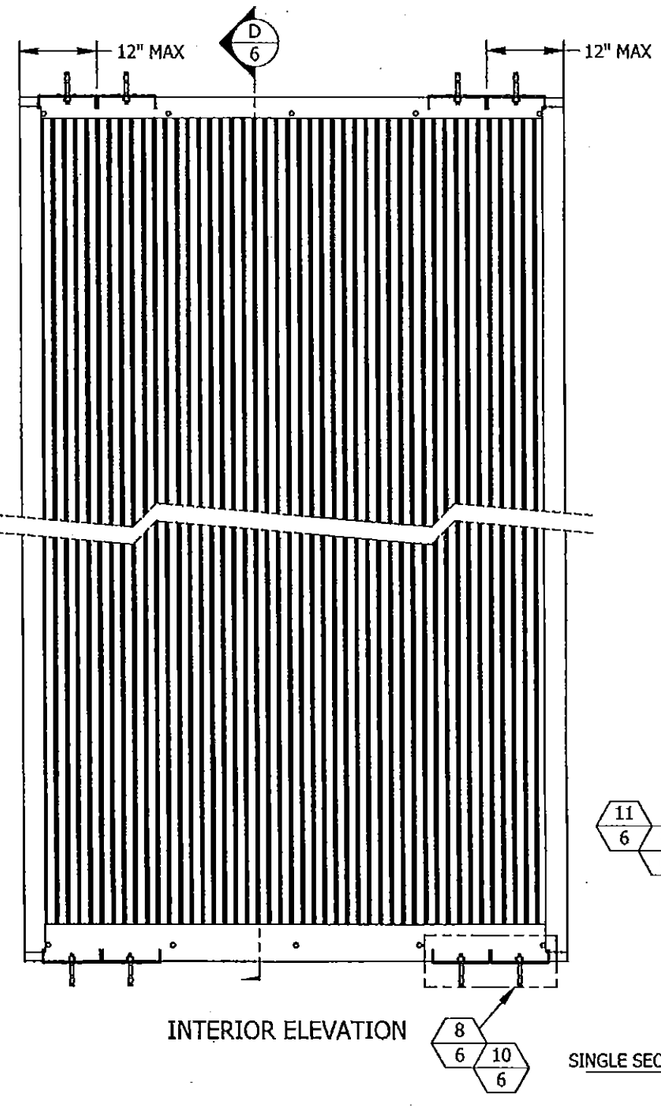

INTERIOR ELEVATION

SINGLE SECTION HIGH (D / 6) CONCRETE CONDITION 6
3/4" = 1'-0"

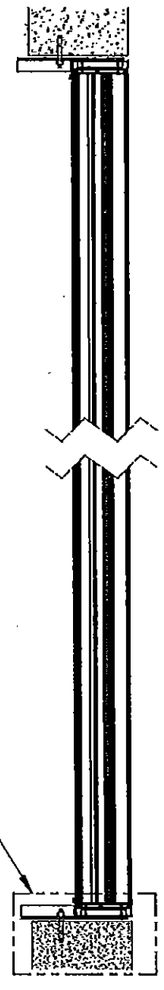

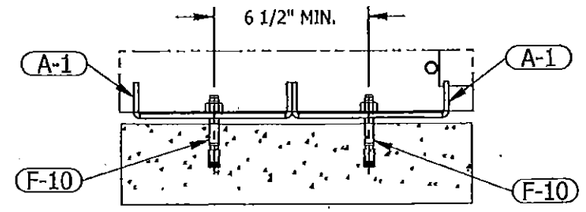

TOP & BTM MOUNT DETAIL (8 / 6) CONCRETE CONDITION 4, 6, 11
6"=1'-0"
SHEAR CONNECTION
(FOR WALL OVER 10" THICK)

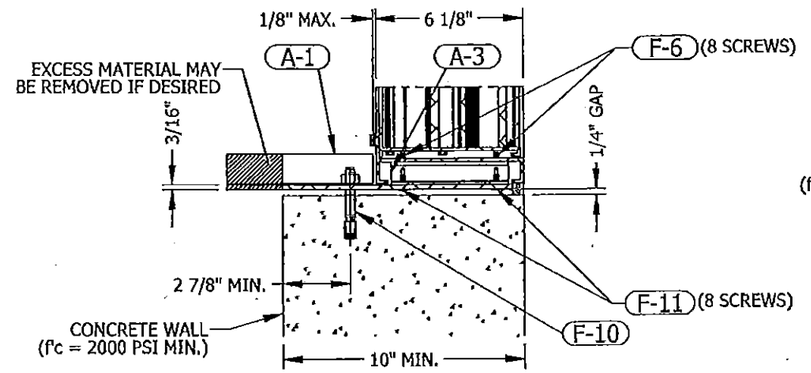

TOP & BTM MOUNT DETAIL (9 / 6) CONCRETE CONDITION 6, 11
6"=1'-0"
SHEAR CONNECTION
(FOR WALL OVER 10" THICK)

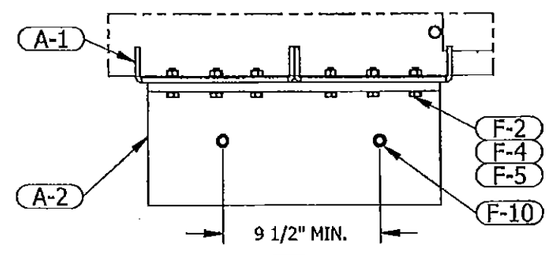

TOP & BTM MOUNT DETAIL (10 / 6) CONCRETE CONDITION 4, 6, 11
6"=1'-0"
TENSION CONNECTION
(WALL THICKNESS 6-1/2" MIN, 10" MAX)

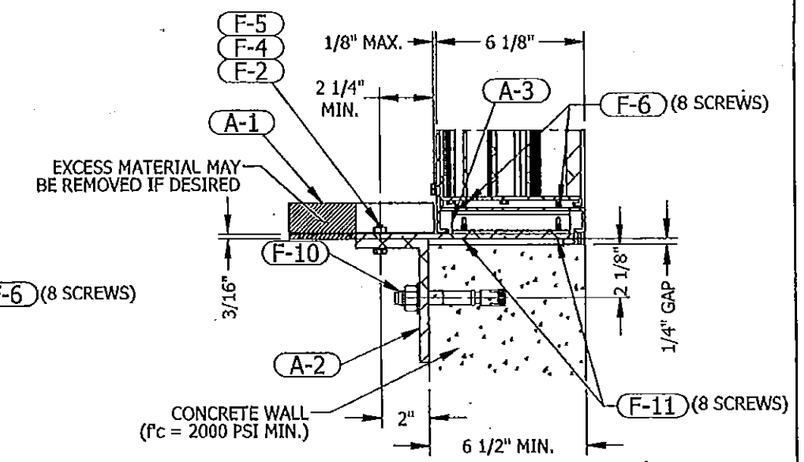

TOP & BTM MOUNT DETAIL (11 / 6) CONCRETE CONDITION 6, 11
6"=1'-0"
TENSION CONNECTION
(WALL THICKNESS 6-1/2" MIN, 10" MAX)

PRODUCT REVISED
as complying with the Florida Building Code
Acceptance No 15-0607.03
Expiration Date 01/22/2020
By
Miami Dade Product Control

Approved as complying with the Florida Building Code
Date 01/22/2015
NOA# 14-0605.11
Miami Dade Product Control
By

P.E. STAMP

WAYNE K. HELMIA
LICENSE
No. 59092
STATE OF
FLORIDA
PROFESSIONAL ENGINEER

OCT 22 2014

RICE ENGINEERING
105 School Creek Trail
Luxemburg, WI 54217
Phone: 920-845-1042
Fax: 920-845-1048
www.rice-inc.com

Florida Firm No: F-01000005061
Certificate of Authorization: #9090
Wayne K. Helmila
Registration No: 59092

NOTE: THE ELEVATION VIEW INCLUDED ON THIS PAGE SHOWS THE ATTACHMENT LOCATIONS FOR A LOUVER SECTION BETWEEN 37" AND 60" WIDE. REFER TO SHEET 4 FOR ATTACHMENT LOCATIONS ON LOUVER SECTIONS LESS THAN 37" WIDE.

REV.	DESCRIPTION	DATE	DRAWN BY
5	CHANGED LOUVER MATERIAL TO 6063-T6	10/13/2014	NW
4	REVISED PER MIAMI DADE COUNTY	8/22/2014	JG
3	REVISED PER RICE MARKUPS	4/23/2014	JG
2	REVISED INSTALLATION DETAILS	1/27/2014	JG
1	INITIAL RELEASE	8/26/2013	LGH

UNLESS OTHERWISE SPECIFIED DIMENSION ARE IN INCHES.

TOLERANCE UNLESS NOTED:
X.X ±0.030
X.XX ±0.015
X.XXX ±0.010
ANGLE ±1°
FRACTION ±1/16

MAX HOLE BREAKOUT:
15% OF MATERIAL THICKNESS

5101 Blue Mound Road
Fort Worth, Texas 76106
Phone: 817-509-2300
Fax: 817-831-3110

THIRD ANGLE PROJECTION

PCI INDUSTRIES DOING BUSINESS AS

POTTORFF®

DRAWING DESCR: SINGLE SEC. WIDE X SINGLE SEC. HIGH - CONCRETE CONDITION
PROJECT: ECV-645-MD
LOCATION:
CUSTOMER:
PROJ. MGR:
DRAWN BY: LGH
DATE: 8/27/2013
CHK'D BY: NW
ORDER NUMBER
P.O. NUMBER
DRAWING NUMBER ECV-645-MD NOA
SHEET: 6 of 15
SCALE: 3/4"=1'-0"

I:\0 ENGINEERING PROJECTS\LOUVERS\MO SO ECV-645MD NOA Creation\Submittal Documents\REV. 5\NOA ECV-645-MD Drawing - POTTORFF REV. 5

SINGLE SECTION WIDE X SINGLE SECTION HIGH - GROUT-FILLED CMU CONDITION

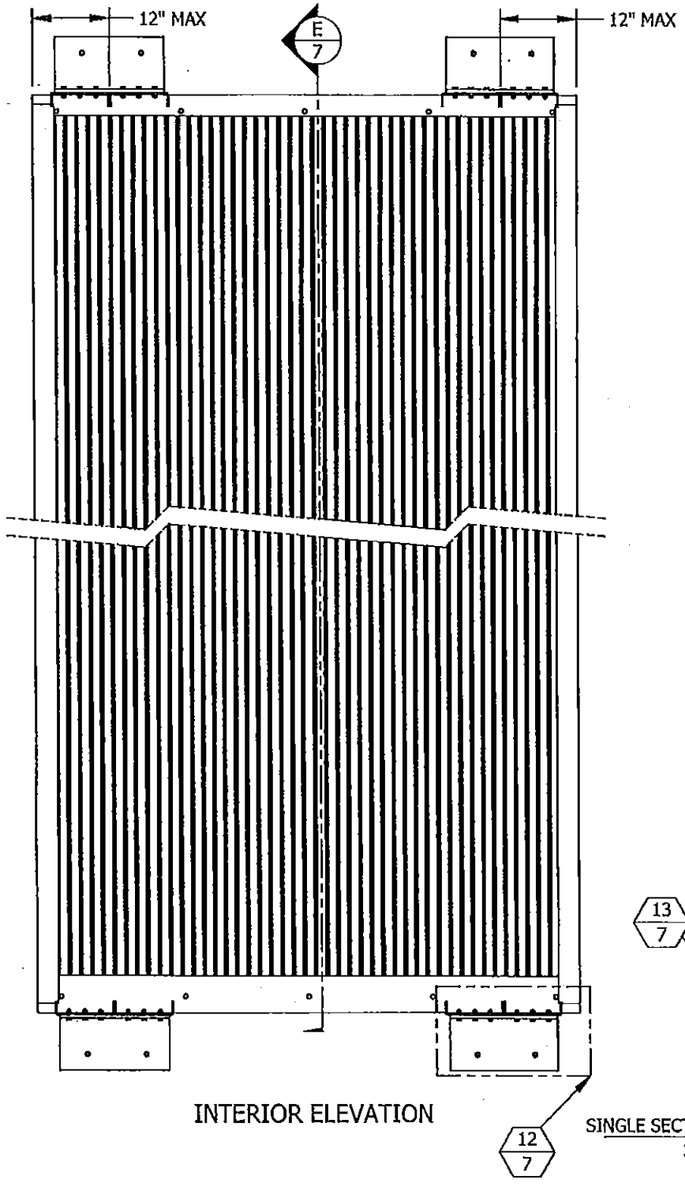

INTERIOR ELEVATION

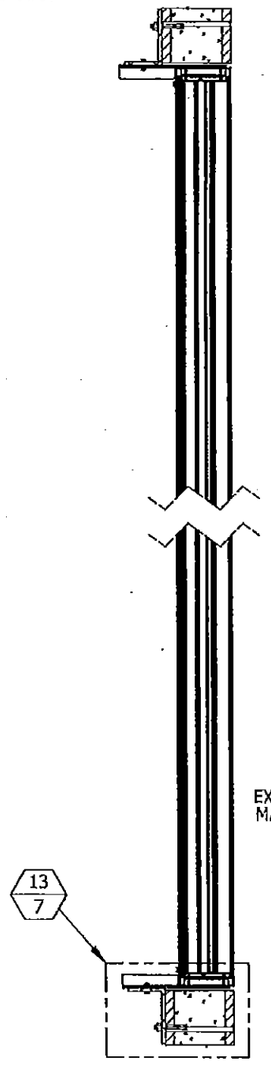

SINGLE SECTION HIGH (E/7) CMU CONDITION 7
3/4" = 1'-0"

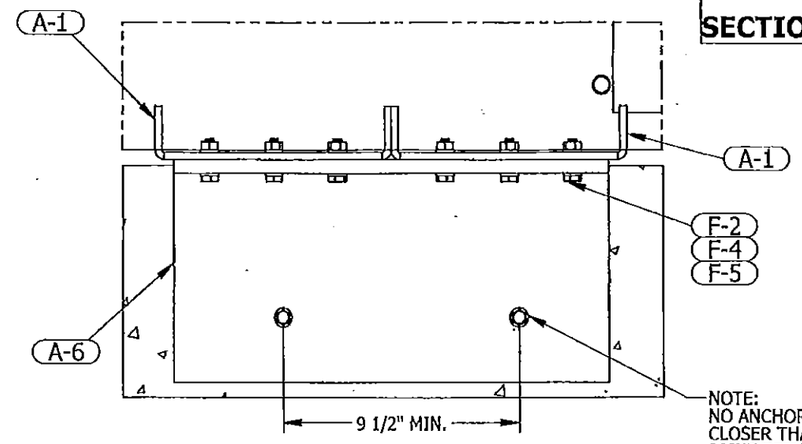

NOTE:
NO ANCHOR MAY BE LOCATED CLOSER THAN 1-3/8" TO A VERTICAL JOINT BETWEEN CMU BLOCKS AND NO CELL IN EACH BLOCK MAY BE PENETRATED BY MORE THAN ONE ANCHOR.

TOP & BTM MOUNT DETAIL (12/7) CMU CONDITION 4, 7, 11
3"=1'-0"

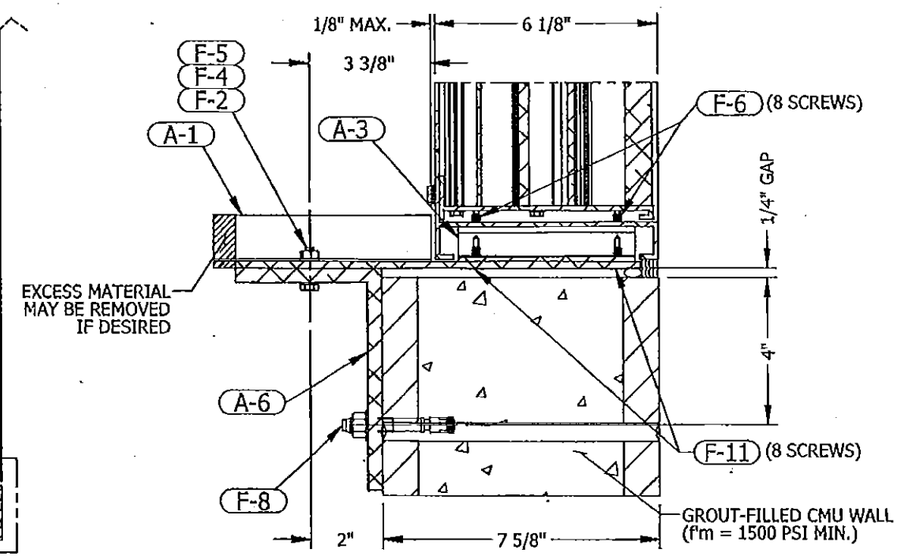

TOP & BTM MOUNT DETAIL (13/7) CMU CONDITION 7, 11
3"=1'-0"

NOTE: THE ELEVATION VIEW INCLUDED ON THIS PAGE SHOWS THE ATTACHMENT LOCATIONS FOR A LOUVER SECTION BETWEEN 37" AND 60" WIDE. REFER TO SHEET 4 FOR ATTACHMENT LOCATIONS ON LOUVER SECTIONS LESS THAN 37" WIDE.

PRODUCT REVISED
as complying with the Florida Building Code
Acceptance No 15-0602.03
Expiration Date 01/22/2020
By
Miami Dade Product Control

Approved as complying with the Florida Building Code
Date 01/22/2015
NOA# 14-0605.11
Miami Dade Product Control
By

P.E. STAMP

WAYNE K. HELMILA
LICENSE
No. 59092
STATE OF FLORIDA
PROFESSIONAL ENGINEER

OCT 22 2014

RICE ENGINEERING
105 School Creek Trail
Luxemburg, WI 54217
Phone: 920-845-1042
Fax: 920-845-1048
www.rice-inc.com

Florida Firm No: F-01000005061
Certificate of Authorization: #9090
Wayne K. Helmila
Registration No: 59092

REV.	DESCRIPTION	DATE	DRAWN BY
5	CHANGED LOUVER MATERIAL TO 6063-T6	10/13/2014	NW
4	REVISED PER MIAMI DADE COUNTY	8/22/2014	JG
3	REVISED PER RICE MARKUPS	4/23/2014	JG
2	REVISED INSTALLATION DETAILS	1/27/2014	JG
1	INITIAL RELEASE	8/26/2013	LGH

UNLESS OTHERWISE SPECIFIED DIMENSION ARE IN INCHES.

TOLERANCE UNLESS NOTED:
X.X ±0.030
X.XX ±0.015
X.XXX ±0.010
ANGLE ±1°
FRACTION ±1/16

MAX HOLE BREAKOUT:
15% OF MATERIAL THICKNESS

5101 Blue Mound Road
Fort Worth, Texas 76106
Phone: 817-509-2300
Fax: 817-831-3110

THIRD ANGLE PROJECTION

PCI INDUSTRIES DOING BUSINESS AS
POTTORFF®

DRAWING DESCR: SINGLE SECTION WIDE X SINGLE SECTION HIGH - CMU CONDITION
PROJECT: ECV-645-MD
LOCATION:
CUSTOMER:
PROJ. MGR:
DRAWN BY: LGH
DATE: 8/27/2013
CHK'D BY: NW
SHEET: 7 of 15
SCALE: 3/4"=1'-0"
ORDER NUMBER
P.O. NUMBER
DRAWING NUMBER
ECV-645-MD NOA

I:\0 ENGINEERING PROJECTS\LOUVERS\NO SO ECV-645MD NOA Creation\Submittal Documents\REV. 5\NOA ECV-645-MD Drawing - POTTORFF REV. 5\

SINGLE SECTION WIDE X SINGLE SECTION HIGH - WOOD CONDITION

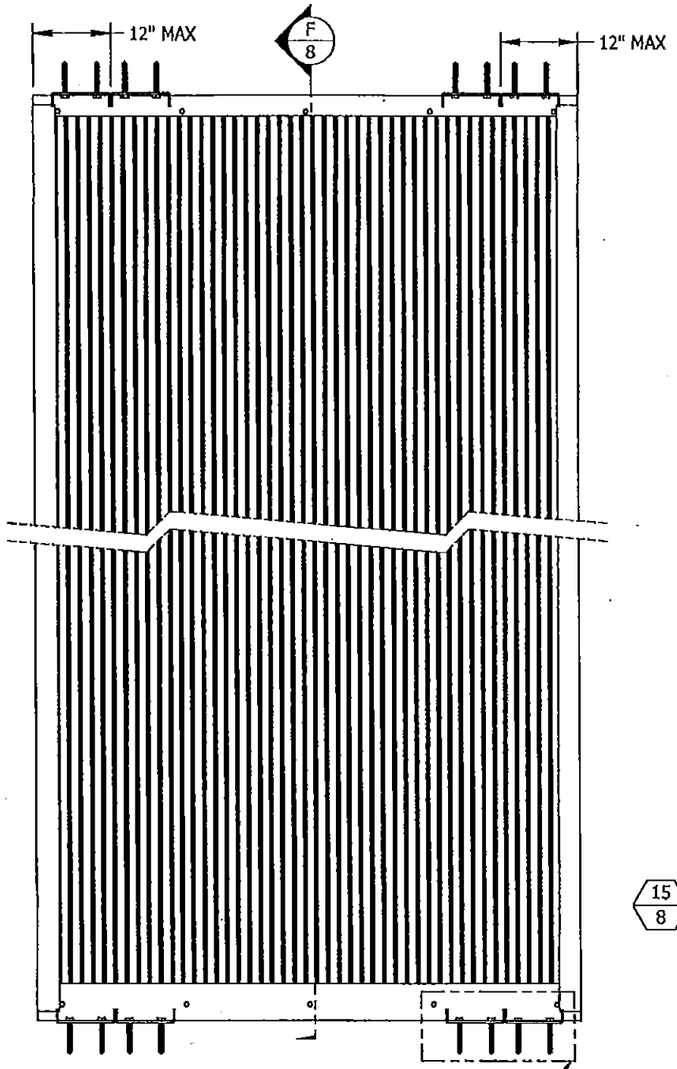

INTERIOR ELEVATION

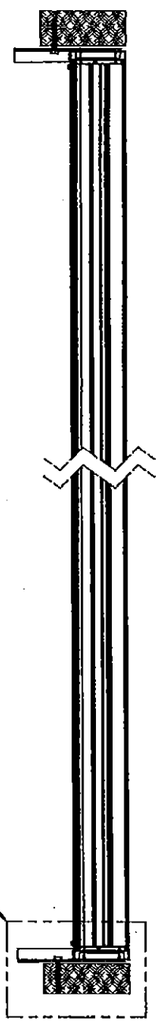

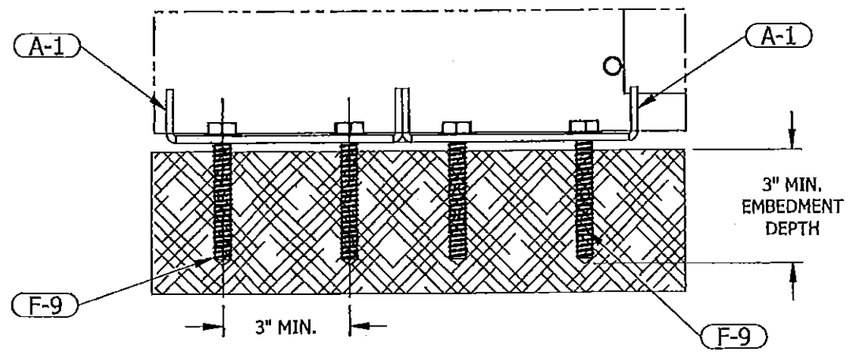

TOP & BTM MOUNT DETAIL (14/8) WOOD CONDITION 4, 8, 11
3"=1'-0"

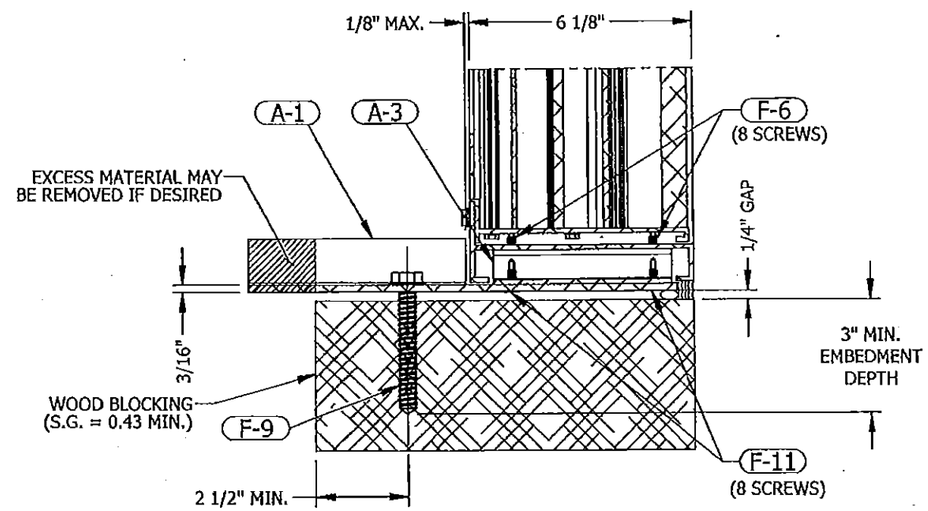

14
8

SINGLE SECTION HIGH (F/8) WOOD CONDITION 8
3/4"=1'-0"

TOP & BTM MOUNT DETAIL (15/8) WOOD CONDITION 8, 11
3"=1'-0"

NOTE: THE ELEVATION VIEW INCLUDED ON THIS PAGE SHOWS THE ATTACHMENT LOCATIONS FOR A LOUVER SECTION BETWEEN 37" AND 60" WIDE. REFER TO SHEET 4 FOR ATTACHMENT LOCATIONS ON LOUVER SECTIONS LESS THAN 37" WIDE.

PRODUCT REVISED
as complying with the Florida Building Code
Acceptance No 15-0607.03
Expiration Date 01/22/2020
By
Miami Dade Product Control

Approved as complying with the Florida Building Code
Date 01/22/2015
NOA# 14-0605.11
Miami Dade Product Control
By

P.E. STAMP

WAYNE K. HELMIA
LICENSE
No. 59092
STATE OF FLORIDA
PROFESSIONAL ENGINEER

OCT 22 2014

RICE ENGINEERING
105 School Creek Trail
Luxemburg, WI 54217
Phone: 920-845-1042
Fax: 920-845-1048
www.rice-inc.com

Florida Firm No: F-01000005061
Certificate of Authorization: #9090
Wayne K. Helmia
Registration No: 59092

REV.	DESCRIPTION	DATE	DRAWN BY
5	CHANGED LOUVER MATERIAL TO 6063-T6	10/13/2014	NW
4	REVISED PER MIAMI DADE COUNTY	8/22/2014	JG
3	REVISED PER RICE MARKUPS	4/23/2014	JG
2	REVISED INSTALLATION DETAILS	1/27/2014	JG
1	INITIAL RELEASE	8/26/2013	LGH

UNLESS OTHERWISE SPECIFIED DIMENSION ARE IN INCHES.

TOLERANCE UNLESS NOTED:
X.X ±0.030
X.XX ±0.015
X.XXX ±0.010
ANGLE ±1°
FRACTION ±1/16

MAX HOLE BREAKOUT: 15% OF MATERIAL THICKNESS

5101 Blue Mound Road
Fort Worth, Texas 76106
Phone: 817-509-2300
Fax: 817-831-3110

THIRD ANGLE PROJECTION

PCI INDUSTRIES DOING BUSINESS AS
POTTORFF®

DRAWING DESCR: SINGLE SECTION WIDE X SINGLE SECTION HIGH - WOOD CONDITION
PROJECT: ECV-645-MD
LOCATION:
CUSTOMER:
PROJ. MGR:
DRAWN BY: LGH
DATE: 8/27/2013
CHK'D BY: NW
SHEET: 8 of 15
SCALE: 3/4"=1'-0"
ORDER NUMBER
P.O. NUMBER
DRAWING NUMBER
ECV-645-MD NOA

I:\0 ENGINEERING PROJECTS\LOUVERS\NO SO ECV-645MD NOA Creation\Submittal Documents\REV. 5\NOA ECV-645-MD Drawing - POTTORFF REV. 5\

SINGLE SECTION WIDE X SINGLE SECTION HIGH - FLANGED ASSEMBLY ALL CONDITIONS

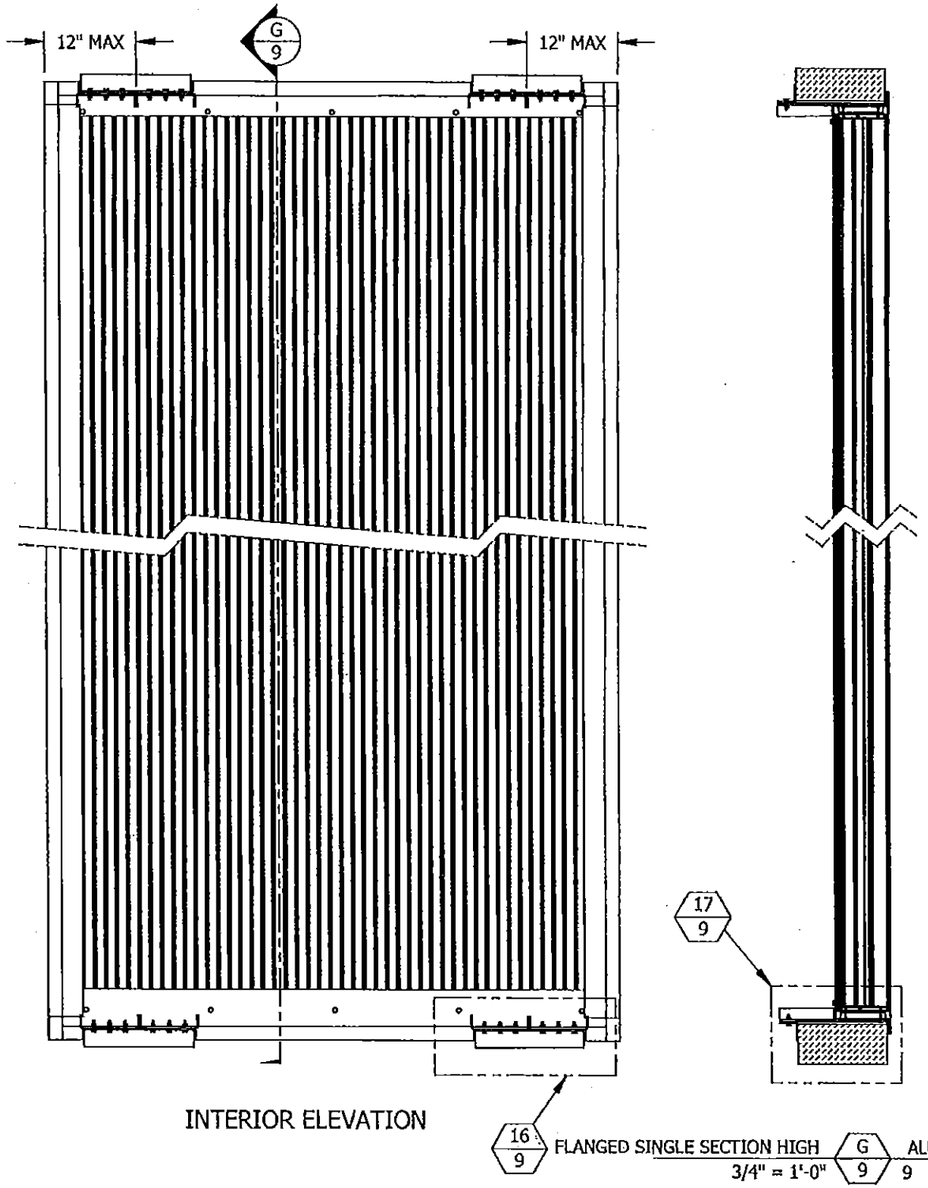

INTERIOR ELEVATION

FLANGED SINGLE SECTION HIGH G/9 ALL CONDITIONS
3/4" = 1'-0" 9

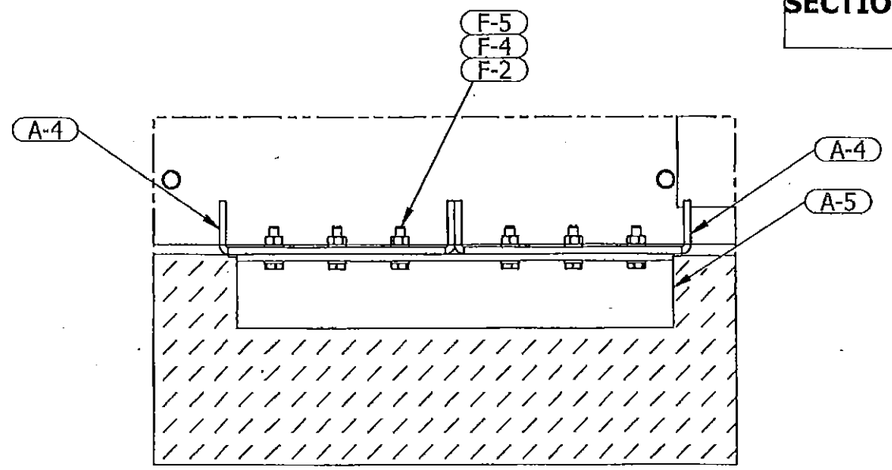

FLANGED TOP & BTM MOUNT DETAIL 16/9 ALL CONDITIONS
3"=1'-0" 4, 9, 12

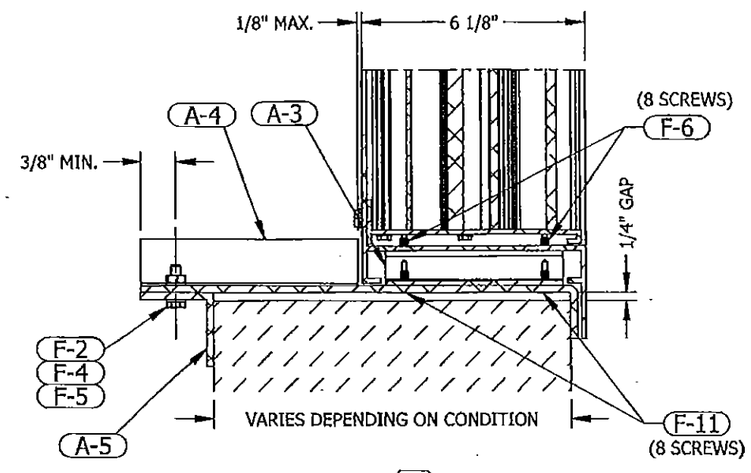

FLANGED TOP & BTM MOUNT DETAIL 17/9 ALL CONDITIONS
3"=1'-0" 9, 12

PRODUCT REVISED
as complying with the Florida Building Code
Acceptance No. 15-0602.03
Expiration Date 01/22/2020
By
Miami Dade Product Control

Approved as complying with the Florida Building Code
Date 01/22/2015
NOA# 14-0605.11
Miami Dade Product Control
By

P.E. STAMP

WAYNE K. HELMILLA
LICENSE
No. 59092
STATE OF FLORIDA
PROFESSIONAL ENGINEER

RICE ENGINEERING
105 School Creek Trail
Luxemburg, WI 54217
Phone: 920-845-1042
Fax: 920-845-1048
www.rice-inc.com
Florida Firm No: F-01000005061
Certificate of Authorization: #9090
Wayne K. Helmila
Registration No: 59092

OCT 22 2014

NOTE: THE ELEVATION VIEW INCLUDED ON THIS PAGE SHOWS THE ATTACHMENT LOCATIONS FOR A LOUVER SECTION BETWEEN 37" AND 60" WIDE. REFER TO SHEET 4 FOR ATTACHMENT LOCATIONS ON LOUVER SECTIONS LESS THAN 37" WIDE.

REV.	DESCRIPTION	DATE	DRAWN BY
5	CHANGED LOUVER MATERIAL TO 6063-T6	10/13/2014	NW
4	REVISED PER MIAMI DADE COUNTY	8/22/2014	JG
3	REVISED PER RICE MARKUPS	4/23/2014	JG
2	REVISED INSTALLATION DETAILS	1/27/2014	JG
1	INITIAL RELEASE	8/26/2013	LGH

UNLESS OTHERWISE SPECIFIED DIMENSION ARE IN INCHES.

TOLERANCE UNLESS NOTED:
X.X ±0.030
X.XX ±0.015
X.XXX ±0.010
ANGLE ±1°
FRACTION ±1/16

MAX HOLE BREAKOUT: 15% OF MATERIAL THICKNESS

5101 Blue Mound Road
Fort Worth, Texas 76106
Phone: 817-509-2300
Fax: 817-831-3110

THIRD ANGLE PROJECTION

PCI INDUSTRIES DOING BUSINESS AS

POTTORFF®

DRAWING DESCR: SINGLE SECTION WIDE X SINGLE SECTION HIGH - FLANGED ASSY - ALL

PROJECT: ECV-645-MD
LOCATION:
CUSTOMER:
PROJ. MGR:
DRAWN BY: LGH
DATE: 8/27/2013
CHK'D BY: NW
ORDER NUMBER
P.O. NUMBER
DRAWING NUMBER
SHEET: 9 of 15
SCALE: 3/4"=1'-0"
ECV-645-MD NOA

I:\0 ENGINEERING PROJECTS\LOUVERS\NO SO ECV-645MD NOA Creation\Submittal Documents\REV. 5\NOA ECV-645-MD Drawing - POTTORFF REV. 5\

SINGLE SECTION WIDE X SINGLE SECTION HIGH - FLANGED ASSEMBLY WITH SLEEVE - ALL CONDITIONS

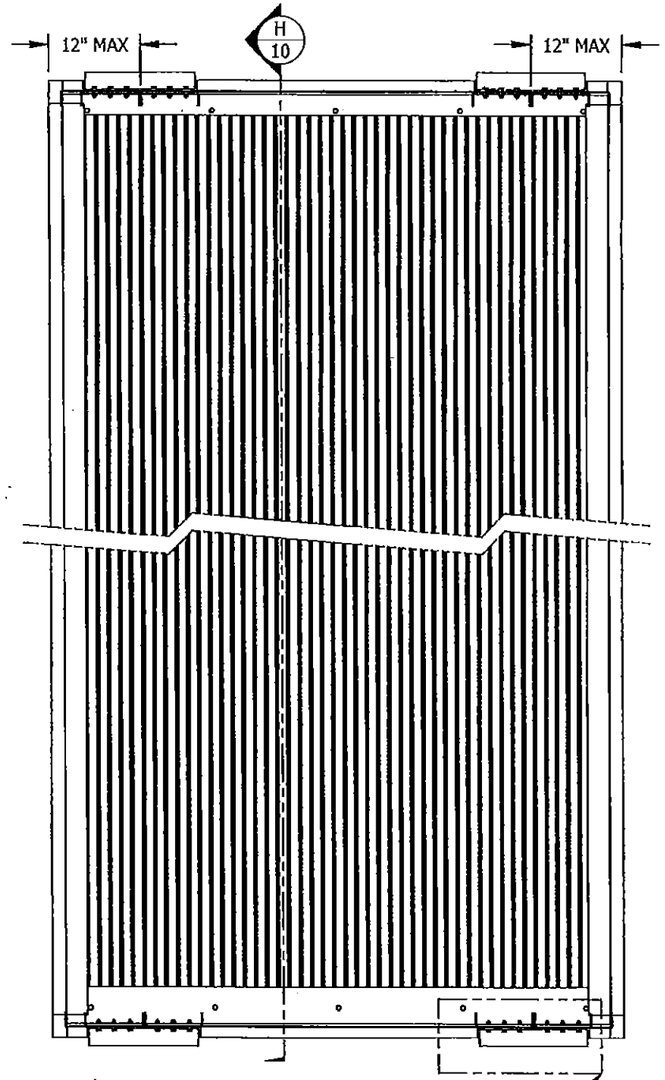

INTERIOR ELEVATION

18
10

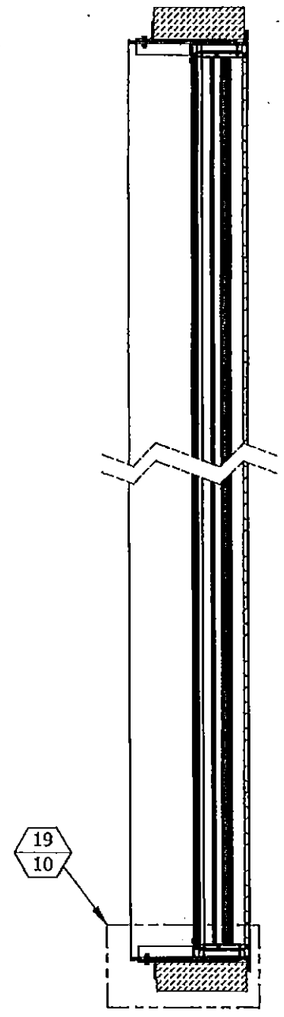

FLANGED SINGLE SECTION HIGH (H / 10) ALL CONDITIONS
3/4" = 1'-0" 10

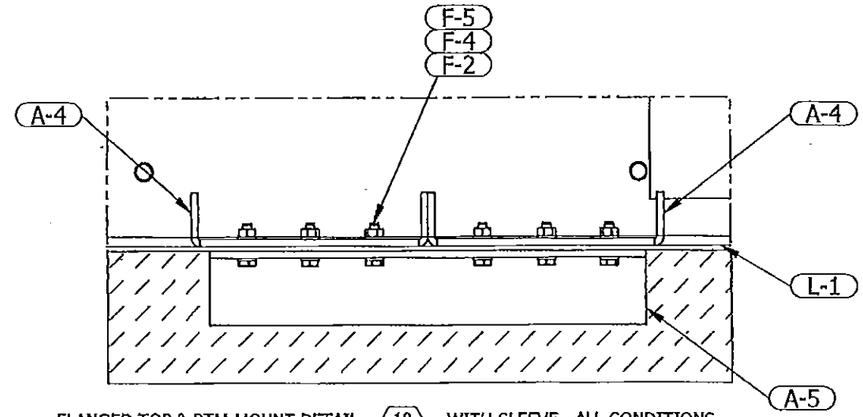

FLANGED TOP & BTM MOUNT DETAIL (18 / 10) WITH SLEEVE - ALL CONDITIONS
3"=1'-0" 4, 10, 12

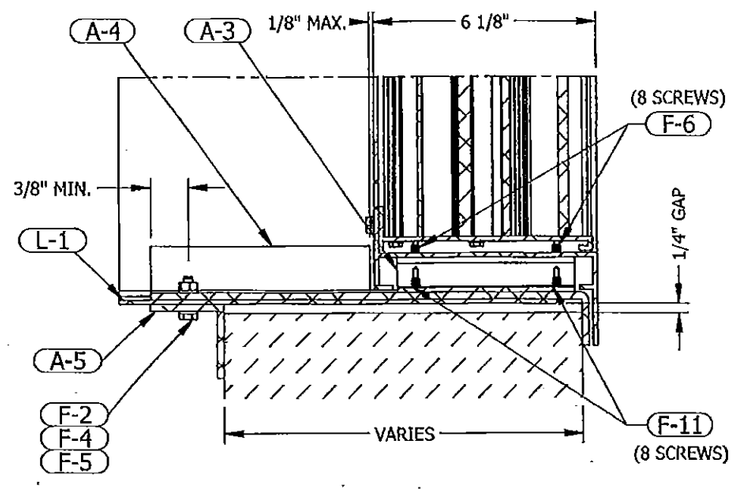

FLANGED TOP & BTM MOUNT DETAIL (19 / 10) WITH SLEEVE - ALL CONDITIONS
3"=1'-0" 10, 12

PRODUCT REVISED
as complying with the Florida Building Code
Acceptance No 15-0602.03
Expiration Date 01/22/2020
By
Miami Dade Product Control

Approved as complying with the Florida Building Code
Date 01/22/2015
NOA# 14-0605.11
Miami Dade Product Control
By

P.E. STAMP

WAYNE K. HELMILA
LICENSED
No.
STATE OF
FLORIDA
PROFESSIONAL ENGINEER

OCT 22 2014

RICE
ENGINEERING
105 School Creek Trail
Luxemburg, WI 54217
Phone: 920-845-1042
Fax: 920-845-1048
www.rice-inc.com

Florida Firm No: F-01000005061
Certificate of Authorization: #9090
Wayne K. Helmila
Registration No: 59092

NOTE: THE ELEVATION VIEW INCLUDED ON THIS PAGE SHOWS THE ATTACHMENT LOCATIONS FOR A LOUVER SECTION BETWEEN 37" AND 60" WIDE. REFER TO SHEET 4 FOR ATTACHMENT LOCATIONS ON LOUVER SECTIONS LESS THAN 37" WIDE.

REV.	DESCRIPTION	DATE	DRAWN BY
5	CHANGED LOUVER MATERIAL TO 6063-T6	10/13/2014	NW
4	REVISED PER MIAMI DADE COUNTY	8/22/2014	JG
3	REVISED PER RICE MARKUPS	4/23/2014	JG
2	REVISED INSTALLATION DETAILS	1/27/2014	JG
1	INITIAL RELEASE	8/26/2013	LGH

UNLESS OTHERWISE SPECIFIED DIMENSION ARE IN INCHES.

TOLERANCE UNLESS NOTED:
X.X ±0.030
X.XX ±0.015
X.XXX ±0.010
ANGLE ±1°
FRACTION ±1/16

MAX HOLE BREAKOUT:
15% OF MATERIAL THICKNESS

5101 Blue Mound Road
Fort Worth, Texas 76106
Phone: 817-509-2300
Fax: 817-831-3110

THIRD ANGLE PROJECTION

PCI INDUSTRIES DOING BUSINESS AS
POTTORFF®

DRAWING DESCR: SINGLE SECT WIDE X SINGLE SECT HIGH - FLANGED SLEEVED ASSY - ALL
PROJECT: ECV-645-MD
LOCATION:
CUSTOMER:
PROJ. MGR:
DRAWN BY: LGH
DATE: 8/27/2013
CHK'D BY: NW
SHEET: 10 of 15
SCALE: 3/4"=1'-0"
ORDER NUMBER
P.O. NUMBER
DRAWING NUMBER
ECV-645-MD NOA

I:\0 ENGINEERING PROJECTS\LOUVERS\NO SO ECV-645MD NOA Creation\Submittal Documents\REV. 5\NOA ECV-645-MD Drawing - POTTORFF REV. 5\

MULTI-SECTION WIDE X SINGLE SECTION HIGH - ALL CONDITIONS

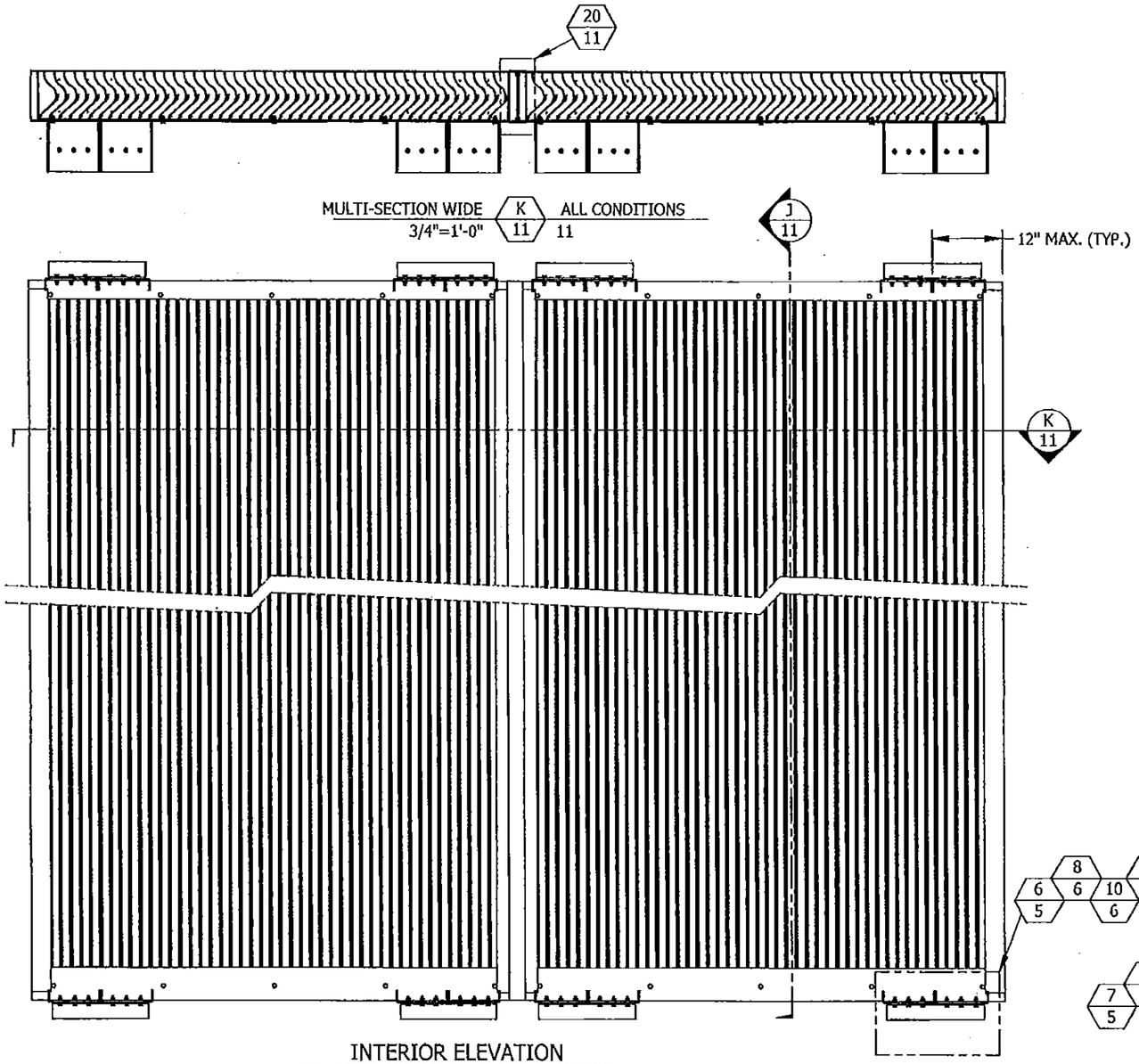

INTERIOR ELEVATION
QUANTITY SECTIONS WIDE IS UNLIMITED

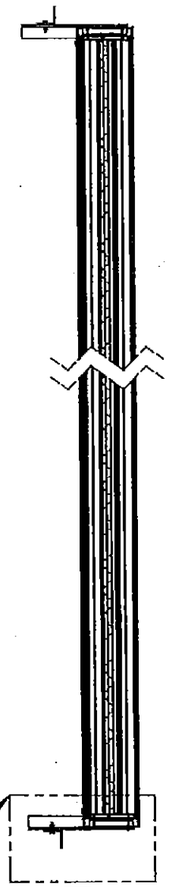

MULTI-SECTION WIDE J 11 ALL CONDITIONS 11
3/4"=1'-0"

PRODUCT REVISED
as complying with the Florida Building Code
Acceptance No 15-0602.03
Expiration Date 01/22/2020
By
Miami Dade Product Control

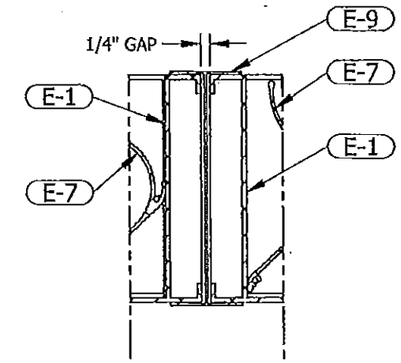

MULTI-SECTION WIDE 20 11 MULLION INSTALLATION 11
3"=1'-0"

QUANTITY SECTIONS WIDE IS UNLIMITED

Approved as complying with the Florida Building Code
Date 01/22/2015
NOA# 14-0605.11
Miami Dade Product Control
By

P.E. STAMP

WAYNE K. HELMILA
LICENSE
No. 59092
STATE OF FLORIDA
PROFESSIONAL ENGINEER

OCT 22 2014

RICE ENGINEERING
105 School Creek Trail
Luxemburg, WI 54217
Phone: 920-845-1042
Fax: 920-845-1048
www.rice-inc.com

Florida Firm No: F-01000005061
Certificate of Authorization: #9090
Wayne K. Helmila
Registration No: 59092

NOTE: THE ELEVATION VIEW INCLUDED ON THIS PAGE SHOWS THE ATTACHMENT LOCATIONS ON LOUVER SECTIONS BETWEEN 37" AND 60" WIDE. REFER TO SHEET 4 FOR ATTACHMENT LOCATIONS ON LOUVER SECTIONS LESS THAN 37" WIDE.

REV.	DESCRIPTION	DATE	DRAWN BY
5	CHANGED LOUVER MATERIAL TO 6063-T6	10/13/2014	NW
4	REVISED PER MIAMI DADE COUNTY	8/22/2014	JG
3	REVISED PER RICE MARKUPS	4/23/2014	JG
2	REVISED INSTALLATION DETAILS	1/27/2014	JG
1	INITIAL RELEASE	8/26/2013	LGH

UNLESS OTHERWISE SPECIFIED DIMENSION ARE IN INCHES.

TOLERANCE UNLESS NOTED:
X.X ±0.030
X.XX ±0.015
X.XXX ±0.010
ANGLE ±1°
FRACTION ±1/16

MAX HOLE BREAKOUT:
15% OF MATERIAL THICKNESS

5101 Blue Mound Road
Fort Worth, Texas 76106
Phone: 817-509-2300
Fax: 817-831-3110

THIRD ANGLE PROJECTION

PCI INDUSTRIES DOING BUSINESS AS
POTTORFF®

DRAWING DESCR: MULTI-SECTION WIDE X SINGLE SECTION HIGH - ALL CONDITIONS
PROJECT: ECV-645-MD
LOCATION:
CUSTOMER:
PROJ. MGR:
DRAWN BY: LGH
DATE: 8/27/2013
CHK'D BY: NW
SHEET: 11 of 15
SCALE: 3/4"=1'-0"
ORDER NUMBER
P.O. NUMBER
DRAWING NUMBER
ECV-645-MD NOA

I:\0 ENGINEERING PROJECTS\LOUVERS\NO SO ECV-645MD NOA Creation\Submittal Documents\REV. 5\NOA ECV-645-MD Drawing - POTTORFF REV. 5\

MULTI-SECTION WIDE X SINGLE SECTION HIGH - FLANGED - ALL CONDITIONS

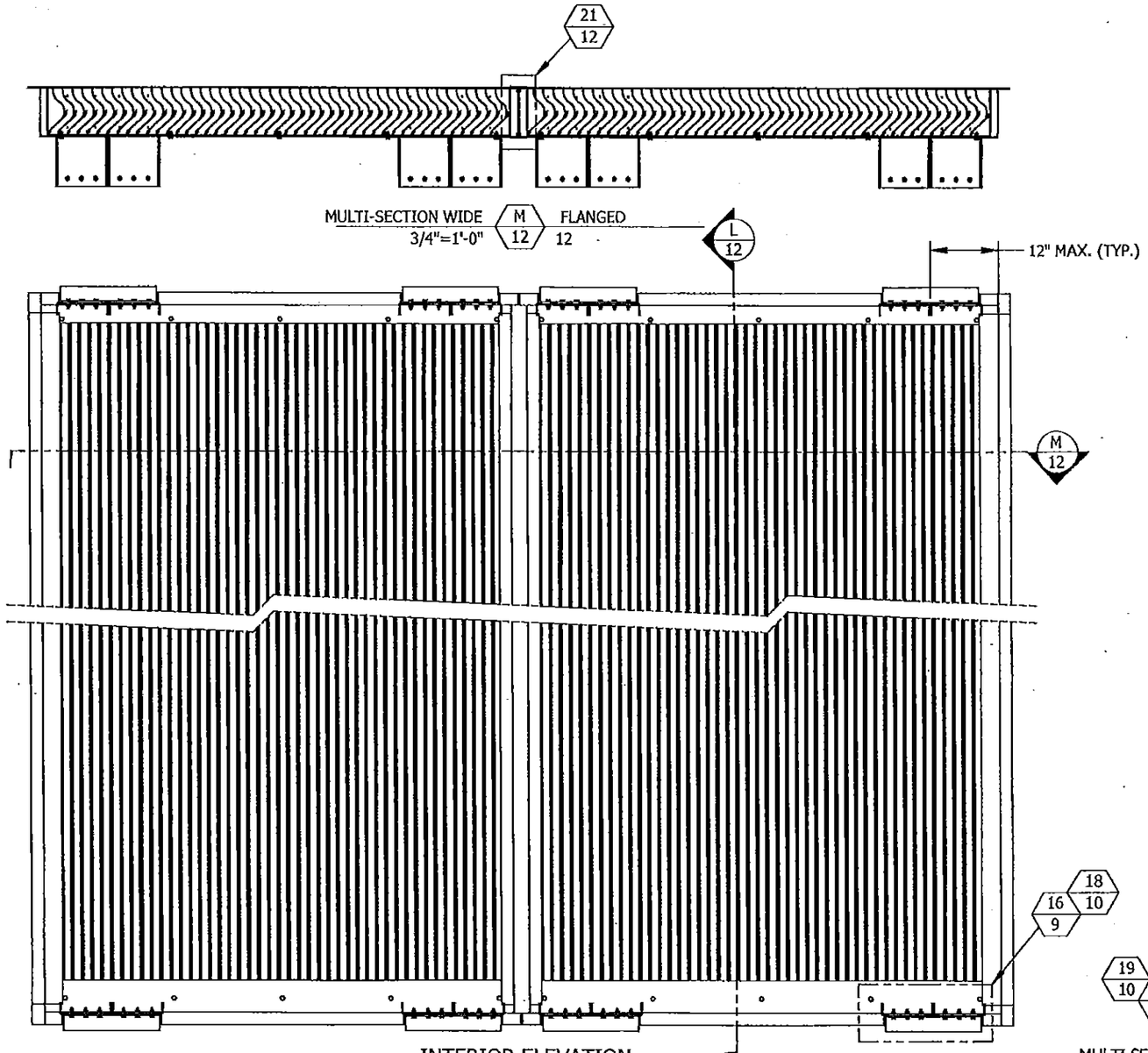

INTERIOR ELEVATION
QUANTITY SECTIONS WIDE IS UNLIMITED

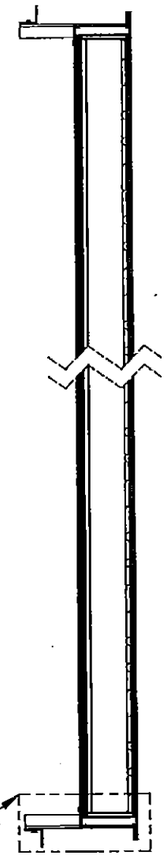

MULTI-SECTION WIDE 3/4"=1'-0" (L 12) FLANGED 12

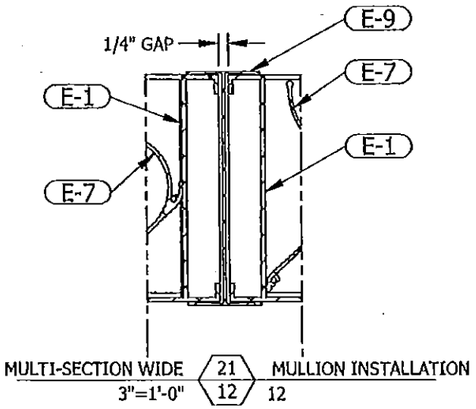

QUANTITY SECTIONS WIDE IS UNLIMITED

PRODUCT REVISED
as complying with the Florida Building Code
Acceptance No 15-0602.03
Expiration Date 01/22/2020
By
Miami Dade Product Control

Approved as complying with the Florida Building Code
Date 01/22/2015
NOA# 14-0605.11
Miami Dade Product Control
By

P.E. STAMP

WAYNE K. HELMILA
LICENSE
No. 59092
STATE OF
FLORIDA
PROFESSIONAL ENGINEER

RICE ENGINEERING
105 School Creek Trail
Luxemburg, WI 54217
Phone: 920-845-1042
Fax: 920-845-1048
www.rice-inc.com

OCT 22 2014

Florida Firm No: F-01000005061
Certificate of Authorization: #9090
Wayne K. Helmila
Registration No: 59092

NOTE: THE ELEVATION VIEW INCLUDED ON THIS PAGE SHOWS THE ATTACHMENT LOCATIONS ON LOUVER SECTIONS BETWEEN 37" AND 60" WIDE. REFER TO SHEET 4 FOR ATTACHMENT LOCATIONS ON LOUVER SECTIONS LESS THAN 37" WIDE.

REV.	DESCRIPTION	DATE	DRAWN BY
5	CHANGED LOUVER MATERIAL TO 6063-T6	10/13/2014	NW
4	REVISED PER MIAMI DADE COUNTY	8/22/2014	JG
3	REVISED PER RICE MARKUPS	4/23/2014	JG
2	REVISED INSTALLATION DETAILS	1/27/2014	JG
1	INITIAL RELEASE	8/26/2013	LGH

UNLESS OTHERWISE SPECIFIED DIMENSION ARE IN INCHES.

TOLERANCE UNLESS NOTED:
X.X ±0.030
X.XX ±0.015
X.XXX ±0.010
ANGLE ±1°
FRACTION ±1/16

MAX HOLE BREAKOUT:
15% OF MATERIAL THICKNESS

5101 Blue Mound Road
Fort Worth, Texas 76106
Phone: 817-509-2300
Fax: 817-831-3110

THIRD ANGLE PROJECTION

PCI INDUSTRIES DOING BUSINESS AS
POTTORFF®

DRAWING DESCR: MULTI-SECTION WIDE X SINGLE SECTION HIGH - FLANGED ASSY - ALL			
PROJECT: ECV-645-MD			
LOCATION:			
CUSTOMER:			
PROJ. MGR:		DRAWN BY: LGH	
DATE: 8/27/2013	CHK'D BY: NW	ORDER NUMBER / P.O. NUMBER	DRAWING NUMBER
SHEET: 12 of 15	SCALE: 3/4"=1'-0"		ECV-645-MD NOA

I:\0 ENGINEERING PROJECTS\LOUVERS\NO SO ECV-645MD NOA Creation\Submittal Documents\REV. 5\NOA ECV-645-MD Drawing - POTTORFF REV. 5

BILL OF MATERIALS

PART NO: E-1

PART NAME: LOUVER JAMB, EXTERIOR

MATERIAL: MINIMUM 0.081" THICK 6063-T6 EXTRUDED ALUMINUM

SCALE: 6"=1'-0"

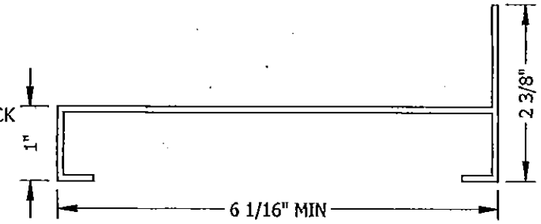

PART NO: E-2

PART NAME: LOUVER JAMB, EXTERIOR, FLANGED

MATERIAL: MINIMUM 0.081" THICK 6063-T6 EXTRUDED ALUMINUM

SCALE: 6"=1'-0"

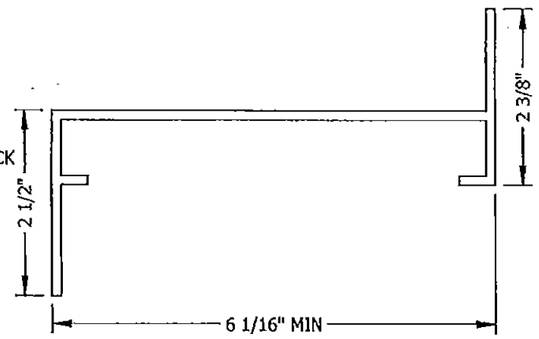

PART NO: E-3

PART NAME: LOUVER HEAD, EXTERIOR

MATERIAL: 0.125" THICK 6063-T6 EXTRUDED ALUMINUM

SCALE: 6"=1'-0"

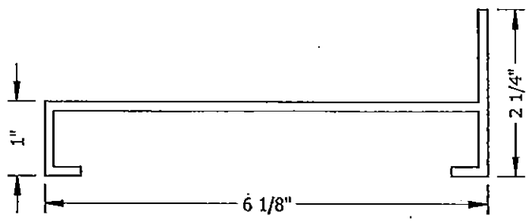

PART NO: E-4

PART NAME: LOUVER HEAD, EXTERIOR, FLANGED

MATERIAL: 0.125" THICK 6063-T6 EXTRUDED ALUMINUM

SCALE: 6"=1'-0"

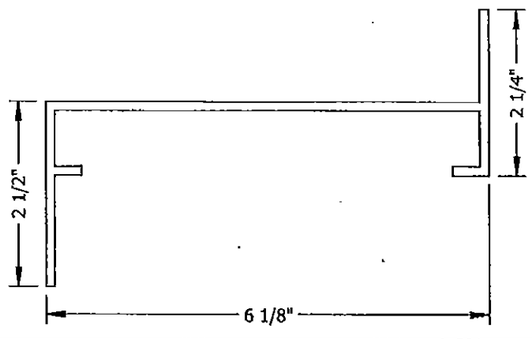

PART NO: E-5

PART NAME: LOUVER SILL, EXTERIOR

MATERIAL: 0.125" THICK 6063-T6 EXTRUDED ALUMINUM

SCALE: 6"=1'-0"

PRODUCT REVISED
as complying with the Florida Building Code
Acceptance No 15-0602.03
Expiration Date 01/22/2020
By
Miami Dade Product Control

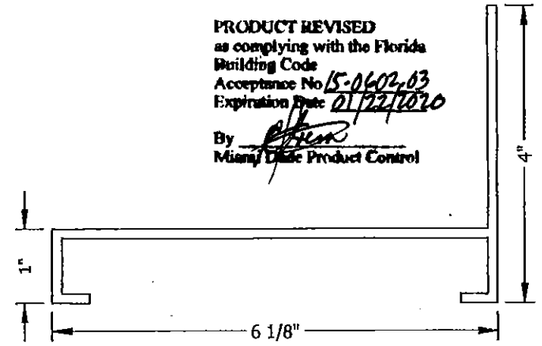

PART NO: E-6

PART NAME: LOUVER SILL, EXTERIOR, FLANGED

MATERIAL: 0.125" THICK 6063-T6 EXTRUDED ALUMINUM

SCALE: 6"=1'-0"

Approved as complying with the Florida Building Code
Date 01/22/2015
NOA# 14-0625.11
Miami Dade Product Control
By

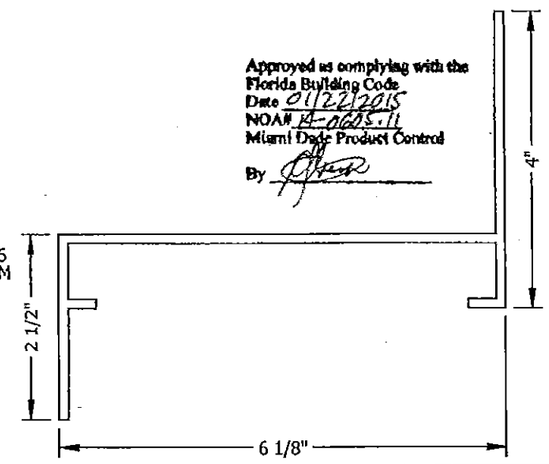

PART NO: E-7

PART NAME: BLADE

MATERIAL: 0.081" THICK 6063-T6 EXTRUDED ALUMINUM

SCALE: 6"=1'-0"

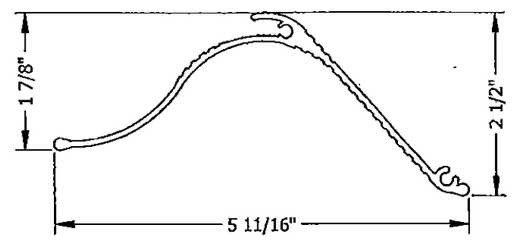

PART NO: E-8

PART NAME: LOUVER HEAD / SILL, INTERIOR

MATERIAL: 0.125" THICK 6063-T6 EXTRUDED ALUMINUM

SCALE: 6"=1'-0"

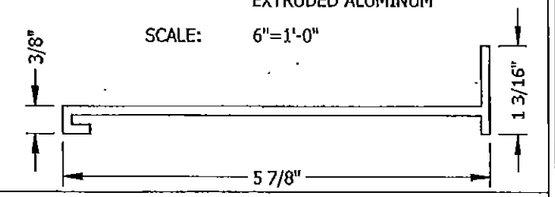

PART NO: E-9

PART NAME: MULLION

MATERIAL: 0.081" THICK 6063-T6 EXTRUDED ALUMINUM

SCALE: 6"=1'-0"

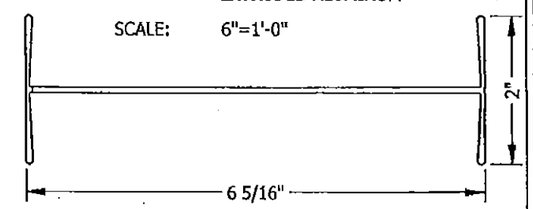

P.E. STAMP

WAYNE K. HELMILA
LICENSE
No. 59092
STATE OF FLORIDA
PROFESSIONAL ENGINEER

OCT 22 2014

RICE ENGINEERING
105 School Creek Trail
Luxemburg, WI 54217
Phone: 920-845-1042
Fax: 920-845-1048
www.rice-inc.com

Florida Firm No: F-01000005061
Certificate of Authorization: #9090
Wayne K. Helmila
Registration No: 59092

REV.	DESCRIPTION	DATE	DRAWN BY
5	CHANGED LOUVER MATERIAL TO 6063-T6	10/13/2014	NW
4	REVISED PER MIAMI DADE COUNTY	8/22/2014	JG
3	REVISED PER RICE MARKUPS	4/23/2014	JG
2	REVISED INSTALLATION DETAILS	1/27/2014	JG
1	INITIAL RELEASE	8/26/2013	LGH

UNLESS OTHERWISE SPECIFIED DIMENSION ARE IN INCHES.

TOLERANCE UNLESS NOTED:
X.X ±0.030
X.XX ±0.015
X.XXX ±0.010
ANGLE ±1°
FRACTION ±1/16

MAX HOLE BREAKOUT: 15% OF MATERIAL THICKNESS

5101 Blue Mound Road
Fort Worth, Texas 76106
Phone: 817-509-2300
Fax: 817-831-3110

THIRD ANGLE PROJECTION

PCI INDUSTRIES DOING BUSINESS AS

POTTORFF®

DRAWING DESCR: BILL OF MATERIALS

PROJECT: ECV-645-MD

LOCATION:

CUSTOMER:

PROJ. MGR:

DRAWN BY: LGH

DATE: 8/27/2013

CHK'D BY: NW

ORDER NUMBER

P.O. NUMBER

DRAWING NUMBER: ECV-645-MD NOA

SHEET: 13 of 15

SCALE: AS NOTED

I:\0 ENGINEERING PROJECTS\LOUVERS\NO SO ECV-645MD NOA Creation\Submittal Documents\REV. 5\NOA ECV-645-MD Drawing - POTTORFF REV. 5\

BILL OF MATERIALS

PART NO: A-1

PART NAME: FORMED CLIP, WITHOUT FRONT FLANGE

MATERIAL: 3/16" THICK
5052-H32 FORMED ALUMINUM

SCALE: 3"=1'-0"

PRODUCT REVISED
as complying with the Florida Building Code
Acceptance No 15-0602.03
Expiration Date 01/22/2020
By
Miami Dade Product Control

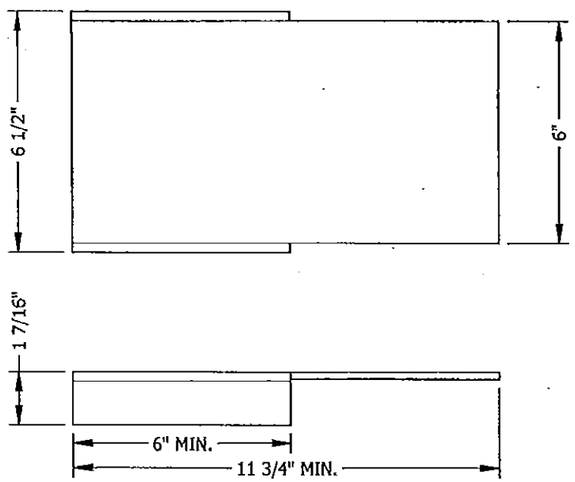

PART NO: A-4

PART NAME: FORMED CLIP WITH FRONT FLANGE

MATERIAL: 3/16" THICK
5052-H32 FORMED ALUMINUM

SCALE: 3"=1'-0"

Approved as complying with the Florida Building Code
Date 01/22/2015
NOA# 14-0605.11
Miami Dade Product Control
By

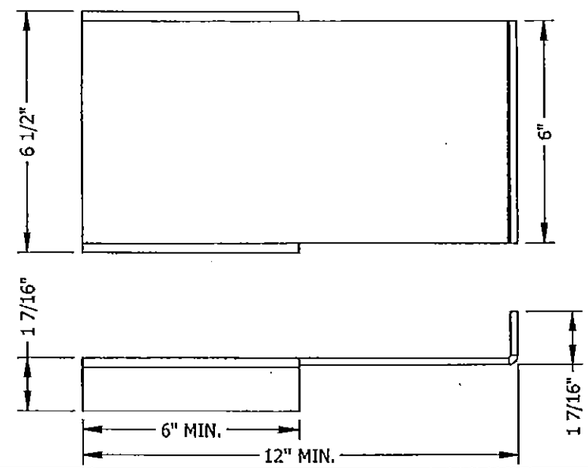

PART NO: A-5

PART NAME: RETAINING ANGLE

MATERIAL: 1/4" THICK X 12" LONG
6063-T5 EXTRUDED ALUMINUM
OR
3/16" THICK X 12" LONG
5052-H32 FORMED ALUMINUM

SCALE: 6"=1'-0"

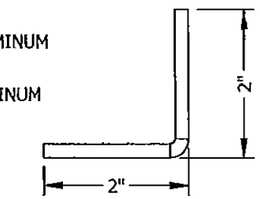

PART NO: L-1

PART NAME: SLEEVE

MATERIAL: MIN. 20 GA. THICK
5052-H32 SHEET ALUMINUM
OR
MIN. 20 GA. THICK GALVANIZED,
304 STAINLESS, OR 316 STAINLESS
STEEL SHEET

SCALE: 6"=1'-0"

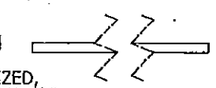

PART NO: A-6

PART NAME: CLIP ANGLE

MATERIAL: 6" X 4" X 3/8" X 12" LONG
6061-T6 EXTRUDED ALUMINUM

SCALE: 6"=1'-0"

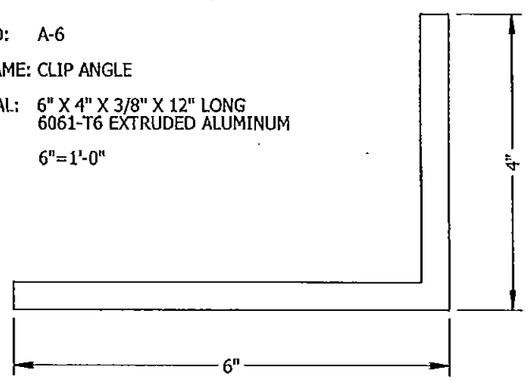

PART NO: A-2

PART NAME: CLIP ANGLE

MATERIAL: 5" X 3" X 3/8" X 12" LONG
6061-T6 EXTRUDED ALUMINUM

SCALE: 6"=1'-0"

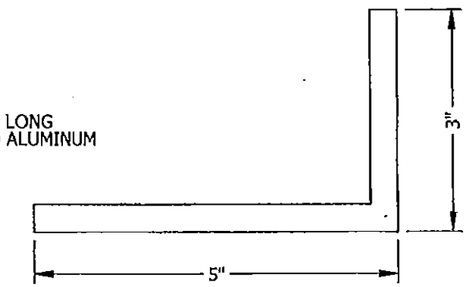

PART NO: A-3

PART NAME: HAT CHANNEL

MATERIAL: 1/8" THICK X 5 1/4" LONG
5052-H32 FORMED ALUMINUM

SCALE: 6"=1'-0"

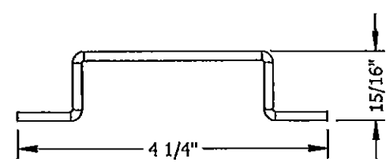

P.E. STAMP

WAYNE K. HELMILA
LICENSE
No. 59092
STATE OF
FLORIDA
PROFESSIONAL ENGINEER

OCT 22 2014

RICE ENGINEERING
105 School Creek Trail
Luxemburg, WI 54217
Phone: 920-845-1042
Fax: 920-845-1048
www.rice-inc.com

Florida Firm No: F-01000005061
Certificate of Authorization: #9090
Wayne K. Helmila
Registration No: 59092

REV.	DESCRIPTION	DATE	DRAWN BY
5	CHANGED LOUVER MATERIAL TO 6063-T6	10/13/2014	NW
4	REVISED PER MIAMI DADE COUNTY	8/22/2014	JG
3	REVISED PER RICE MARKUPS	4/23/2014	JG
2	REVISED INSTALLATION DETAILS	1/27/2014	JG
1	INITIAL RELEASE	8/26/2013	LGH

UNLESS OTHERWISE SPECIFIED DIMENSION ARE IN INCHES.

TOLERANCE UNLESS NOTED:
X.X ±0.030
X.XX ±0.015
X.XXX ±0.010
ANGLE ±1°
FRACTION ±1/16

MAX HOLE BREAKOUT:
15% OF MATERIAL THICKNESS

5101 Blue Mound Road
Fort Worth, Texas 76106
Phone: 817-509-2300
Fax: 817-831-3110

THIRD ANGLE PROJECTION

PCI INDUSTRIES DOING BUSINESS AS
POTTORFF®

DRAWING DESCR: BILL OF MATERIALS
PROJECT: ECV-645-MD
LOCATION:
CUSTOMER:
PROJ. MGR:
DRAWN BY: LGH
DATE: 8/27/2013
CHK'D BY: NW
ORDER NUMBER
P.O. NUMBER
DRAWING NUMBER
SHEET: 14 of 15
SCALE: AS NOTED
ECV-645-MD NOA

I:\0 ENGINEERING PROJECTS\LOUVERS\NO SO ECV-645MD NOA Creation\Submittal Documents\REV. 5\NOA ECV-645-MD Drawing - POTTORFF REV. 5\

BILL OF MATERIALS

MISCELLANEOUS FASTENERS	
PART NO	DESCRIPTION
F-1	#10-24 X 3/4" LONG, 6 LOBE DRIVE, 410 S.S., HWH, "F" POINT THREAD CUTTING MACHINE SCREW, BRIGHT HARDENED, PASSIVATED & WAXED, NO SERRATIONS UNDER HEAD, MADE IN U.S.A.
F-2	WASHER, FLAT, 1/4" I.D. X 5/8" O.D., 18-8 S.S.
F-3	BOLT, HEX HEAD, 1/4-20 UNC X 3/4" LONG, 18-8 S.S.
F-4	NUT, HEX, 1/4-20 UNC, 18-8 S.S.
F-5	BOLT, HEX HEAD, 1/4-20 UNC X 1" LONG, 304 S.S.
F-6	#12-14 X 3/4" LONG, HWH, 410 S.S. SELF-DRILLING TEK MACHINE SCREW
F-7	#12-14 X 1" LONG, HWH, SELF-DRILLING TEK MACHINE SCREW
F-8	5/8" x 5-1/2" HILTI KWIK BOLT III EXPANSION ANCHOR
F-9	1/2" X 3-1/2" LAG BOLT W/FLAT WASHER , 3" MINIMUM EMBEDMENT
F-10	1/2" x 5-1/2" HILTI KWIK BOLT TZ EXPANSION ANCHOR
F-11	#12-14 X 3/4" LONG FLAT HEAD, 410 S.S. SELF-DRILLING TEK MACHINE SCREW

P.E. STAMP

PRODUCT REVISED
as complying with the Florida Building Code
Acceptance No. 15-0602.03
Expiration Date 01/22/2020
By
Miami Dade Product Control

Approved as complying with the Florida Building Code
Date 01/22/2015
NOA# 14-0603.11
Miami Dade Product Control
By

WAYNE K. HELMILA
LICENSE
No. 59092
STATE OF FLORIDA
PROFESSIONAL ENGINEER

OCT 22 2014

RICE ENGINEERING
105 School Creek Trail
Luxemburg, WI 54217
Phone: 920-845-1042
Fax: 920-845-1048
www.rice-inc.com

Florida Firm No: F-01000005061
Certificate of Authorization: #9090
Wayne K. Helmila
Registration No: 59092

NOTE: ALL INSTALLATION FASTENERS AND ANCHORS SHOULD BE OF CORROSION-RESISTANT STEEL (STAINLESS, HOT-DIP GALVANIZED, OR ZINC-PLATED)

REV.	DESCRIPTION	DATE	DRAWN BY
5	CHANGED LOUVER MATERIAL TO 6063-T6	10/13/2014	NW
4	REVISED PER MIAMI DADE COUNTY	8/22/2014	JG
3	REVISED PER RICE MARKUPS	4/23/2014	JG
2	REVISED INSTALLATION DETAILS	1/27/2014	JG
1	INITIAL RELEASE	8/26/2013	LGH

UNLESS OTHERWISE SPECIFIED DIMENSION ARE IN INCHES.

TOLERANCE UNLESS NOTED:
X.X ±0.030
X.XX ±0.015
X.XXX ±0.010
ANGLE ±1°
FRACTION ±1/16

MAX HOLE BREAKOUT: 15% OF MATERIAL THICKNESS

5101 Blue Mound Road
Fort Worth, Texas 76106
Phone: 817-509-2300
Fax: 817-831-3110

THIRD ANGLE PROJECTION

PCI INDUSTRIES DOING BUSINESS AS

POTTORFF®

DRAWING DESCR: BILL OF MATERIALS			
PROJECT: ECV-645-MD			
LOCATION:			
CUSTOMER:			
PROJ. MGR:		DRAWN BY: LGH	
DATE: 8/27/2013	CHK'D BY: NW	ORDER NUMBER	P.O. NUMBER	DRAWING NUMBER
SHEET: 15 of 15	SCALE: AS NOTED			ECV-645-MD NOA

I:\0 ENGINEERING PROJECTS\LOUVERS\NO SO ECV-645MD NOA Creation\Submittal Documents\REV. 5\NOA ECV-645-MD Drawing - POTTORFF REV. 5\