MIAMI-DADE COUNTY
PRODUCT CONTROL SECTION
11805 SW 26 Street, Room 208
Miami, Florida 33175-2474
T (786) 315-2590 F (786) 315-2599
www.miamidade.gov/economy

DEPARTMENT OF REGULATORY AND ECONOMIC RESOURCES (RER)
BOARD AND CODE ADMINISTRATION DIVISION

NOTICE OF ACCEPTANCE (NOA)

E.S. Windows, LLC
10653 NE Quaybridge Ct.
Miami, FL 33138

SCOPE:

This NOA is being issued under the applicable rules and regulations governing the use of construction materials. The documentation submitted has been reviewed and accepted by Miami-Dade County RER -Product Control Section to be used in Miami Dade County and other areas where allowed by the Authority Having Jurisdiction (AHJ).

This NOA shall not be valid after the expiration date stated below. The Miami-Dade County Product Control Section (In Miami Dade County) and/or the AHJ (in areas other than Miami Dade County) reserve the right to have this product or material tested for quality assurance purposes. If this product or material fails to perform in the accepted manner, the manufacturer will incur the expense of such testing and the AHJ may immediately revoke, modify, or suspend the use of such product or material within their jurisdiction. RER reserves the right to revoke this acceptance, if it is determined by Miami-Dade County Product Control Section that this product or material fails to meet the requirements of the applicable building code.

This product is approved as described herein, and has been designed to comply with the Florida Building Code, including the High Velocity Hurricane Zone.

DESCRIPTION: Series 9000 Aluminum Outswing French Door w/ wo Transom-L.M.I.

APPROVAL DOCUMENT: Drawing No. **W08-66 Rev J**, titled "Series- 9000 Alum Outswing French Door (L.M.I.)", sheets 1 through 11 of 11, including sheet 3.1, dated 03/08/16 and last revised on 03/08/16, prepared by Al-Farooq Corporation, signed and sealed by Javad Ahmad, P.E., bearing the Miami-Dade County Product Control Revision stamp with the Notice of Acceptance number and expiration date by the Miami-Dade County Product Control Section.

MISSILE IMPACT RATING: Large and Small Missile Impact Resistant

Limitations:

1. See Design Pressure charts for Single or Double door w/wo transom, glass type, lock type, hinges type and head, sill and jambs anchors. Lower Design Pressure shall apply to the entire assembly.
2. The Single Door with Transom is limited to Maximum Design Pressure DP = **± 90 PSF**.
3. Only Single Door w/ High Threshold option item **E-2B** (part # ES-9026) is rated for external Positive **+120 PSF** Water Resistant Rating, all other condition and thresholds are **not** rated for water Resistant Ratings.
4. Single Door w/wo transom utilizing Saddle Threshold option item E-2A (part #ES-9015) is limited to Maximum Design Pressure DP = **+/90 PSF.**

LABELING: Each unit shall bear a permanent label with the manufacturer's name or logo, city, state and series and following statement: "Miami-Dade County Product Control Approved", noted herein.

RENEWAL of this NOA shall be considered after a renewal application has been filed and there has been no change in the applicable building code negatively affecting the performance of this product.

TERMINATION of this NOA will occur after the expiration date or if there has been a revision or change in the materials, use, and/or manufacture of the product or process. Misuse of this NOA as an endorsement of any product, for sales, advertising or any other purposes shall automatically terminate this NOA. Failure to comply with any section of this NOA shall be cause for termination and removal of NOA.

ADVERTISEMENT: The NOA number preceded by the words Miami-Dade County, Florida, and followed by the expiration date may be displayed in advertising literature. If any portion of the NOA is displayed, then it shall be done in its entirety.

INSPECTION: A copy of this entire NOA shall be provided to the user by the manufacturer or its distributors and shall be available for inspection at the job site at the request of the Building Official.

MIAMI-DADE COUNTY APPROVED

3/17/16

MIAMI-DADE COUNTY
PRODUCT CONTROL SECTION
11805 SW 26 Street, Room 208
Miami, Florida 33175-2474
T (786) 315-2590 F (786) 315-2599
www.miamidade.gov/economy

DEPARTMENT OF REGULATORY AND ECONOMIC RESOURCES (RER)
BOARD AND CODE ADMINISTRATION DIVISION

NOTICE OF ACCEPTANCE (NOA)

This NOA **revises NOA # 13-0617.29** and consists of page 1, this page 2, and evidence pages E-1 & E-2, as well as approval document mentioned above.
The submitted documentation was reviewed by **Jorge Plasencia, P.E.**

MIAMI-DADE COUNTY APPROVED 3/17/16

NOTICE OF ACCEPTANCE: EVIDENCE SUBMITTED

A. DRAWINGS

1. Manufacturer's die drawings and sections.
   (Submitted under previous NOA's #12-0306.07 & 10-0301.03)
2. Drawing No. **W08-66 Rev J**, titled "Series- 9000 Alum Outswing French Door (L.M.I.)", sheets 1 through 11 of 11, including sheet 3.1, dated 03/08/16 and last revised on 03/08/16, prepared by Al-Farooq Corporation, signed and sealed by Javad Ahmad, P.E.

B. TESTS

1. Test reports on: 1) Air Infiltration Test, per FBC, TAS 202-94
   2) Uniform Static Air Pressure Test, Loading per FBC TAS 202-94
   3) Large Missile Impact Test per FBC, TAS 201-94
   4) Large Missile Impact Test per FBC, TAS 201-94
   5) Cyclic Wind Pressure Loading per FBC, TAS 203-94
   6) Forced Entry Test, per FBC 2411. 3.2.1, TAS 202-94

   along with marked–up drawings and installation diagram of an Alum. Outswing Entrance Door, prepared by Fenestration Testing Laboratory, Inc., Test Report No. **FTL-5554**, dated 05/10/08, signed and sealed by Carlos S. Rionda, P.E.
   (Submitted under previous NOA's #12-0306.07 & 10-0301.03)
2. Test reports on: 1) Uniform Static Air Pressure Test
   2) Large Missile Impact Test per FBC, TAS 201-94
   3) Cyclic Wind Pressure Loading per FBC, TAS 203-94

   along marked-up drawings of an Alum. Outswing Entrance Door, prepared by FTL, Inc., Test Report No. **FTL-5556**, dtd 04/27/08, signed and sealed by Carlos S. Rionda, P.E.
   (Submitted under previous NOA's #12-0306.07 & 10-0301.03)
3. Additional test reports along with marked-up drawings of a single (X) aluminum outswing door per TAS 201, 202 (Full) and 203-94, issued by Fenestration Testing lab, Inc., Test Report No. **FTL-5992**, dated 09/09/09, reissued on 2/2/11 signed & sealed by Marlin D. Brinson, P. E.
   (Submitted under previous NOA's #12-0306.07 & 10-0301.03)

C. CALCULATIONS

1. Anchor verification calculations and structural analysis, complying with FBC-2014, prepared by Al Farooq Corporation, dated 05/29/15, 01/14/16 and last revised on 03/14/16, signed and sealed by Javad Ahmad, P.E.
2. Glazing complies w/ ASTME-1300-09.

D. QUALITY ASSURANCE

1. Miami Dade Department of Regulatory and Economic Resources (RER).

Jorge Plasencia, P.E.
Product Control Unit Supervisor
NOA No. 15-0602.09
Expiration Date: December 24, 2018
Approval Date: March 24, 2016

NOTICE OF ACCEPTANCE: EVIDENCE SUBMITTED

E. MATERIAL CERTIFICATIONS

1. Notice of Acceptance No. **14-0916.11** issued to Kuraray America, Inc. for their "**Sentry Glas® (Clear and White) Glass Interlayers**" dated 06/25/15, expiring on 07/04/18.
2. Notice of Acceptance No. 14-0916.10 issued to Kuraray America, Inc. for their "**Butacite® PVB Glass Interlayer**" dated 04/25/15, expiring 12/11/16.

F. STATEMENTS

1. Statement letter dated 03/16/16, compliance to FBC2014 (**5th edition**) and No financial interest, prepared by Al Farooq Corporation, signed and sealed by Javad Ahmad, P.E.
2. Lab Compliance statement, part of above referenced test report.

G. OTHER

1. Notice of Acceptance No. **13-0617.29**, issued to E.S. Windows, LLC for their **"Series 9000 Aluminum Outswing French Door w/ wo Transom-L.M.I."**, approved on 09/05/13 and expiring on 12/24/18.
2. Distribution agreement ES Windows-Energia Solar, S.A. and ES Windows, LLC, dated 10/20/10, signed by Ms. Carla G. Torrente and Andres Chamorro respectively. ***(Submitted under previous NOA # 10-0301.03)***
3. Test proposals # **07-4070** & **09-0165**, approved by BCCO. ***(Submitted under previous NOA# 08-0813.04)***

Jorge Plasencia, P.E.
Product Control Unit Supervisor
NOA No. 15-0602.09
Expiration Date: December 24, 2018
Approval Date: March 24, 2016

GLASS D.L.O. DIMS.

D.L.O. HEIGHT (DOOR) = FRAME HEIGHT – 15.250" (STD. THRESHOLD)
D.L.O. WIDTH (DOOR) = FRAME WIDTH – 14.0625"

D.L.O. HEIGHT (TRANSOM) = FRAME HEIGHT – 5.125"
D.L.O. WIDTH (TRANSOM) = FRAME WIDTH – 7"

LEAF HEIGHT = FRAME HEIGHT – 2.938" (STD. THRESHOLD)
LEAF WIDTH = FRAME WIDTH – 5.188"

THESE DOORS ARE RATED FOR LARGE & SMALL MISSILE IMPACT. SHUTTERS ARE NOT REQUIRED.

SERIES 9000
ALUMINUM OUTSWING ENTRANCE DOOR

SEE CHARTS ON THIS SHEET FOR DESIGN LOAD CAPACITY OF SINGLE DOORS WITH OR WITHOUT TRANSOMS.

SEE CHARTS ON SHEET 2 FOR DESIGN LOAD CAPACITY OF DOUBLE DOORS WITH OR WITHOUT TRANSOMS.

DOORS CAN ALSO BE USED WITH ES SERIES 8000 OR SERIES 9500 STOREFRONT SYSTEMS UNDER SEPARATE APPROVAL. MULLION ATTACHMENT, END LOAD AND CAPACITY TO BE REVIEWED BY BUILDING OFFICIAL.

DOUBLE DOORS WITH STANDARD, SADDLE AND HIGH THRESHOLD AND SINGLE DOORS WITH STANDARD AND SADDLE THRESHOLD ARE NOT APPROVED FOR INSTALLATIONS WHERE WATER INFILTRATION RESISTANCE IS REQUIRED. SINGLE DOORS USING ES-9026 (HIGH THRESHOLD OPTION) ARE APPROVED FOR WATER INFILTRATION RESISTANCE. SEE SHEET 4 FOR DETAILS.

THIS PRODUCT HAS BEEN DESIGNED AND TESTED TO COMPLY WITH THE REQUIREMENTS OF THE 2014 (5TH EDITION) FLORIDA BUILDING CODE INCLUDING HIGH VELOCITY HURRICANE ZONE (HVHZ).

1BY OR 2BY WOOD BUCKS BY OTHERS, MUST BE ANCHORED PROPERLY TO TRANSFER LOADS TO THE STRUCTURE.

ANCHORS SHALL BE AS LISTED, SPACED AS SHOWN ON DETAILS, ANCHORS EMBEDMENT TO BASE MATERIAL SHALL BE BEYOND WALL DRESSING OR STUCCO.

ANCHORING OR LOADING CONDITIONS NOT SHOWN IN THESE DETAILS ARE NOT PART OF THIS APPROVAL.

A LOAD DURATION INCREASE IS USED IN DESIGN OF ANCHORS INTO WOOD ONLY.

ALL SHIMS TO BE HIGH IMPACT, NON-METALLIC AND NON-COMPRESSIBLE.

MATERIALS INCLUDING BUT NOT LIMITED TO STEEL/METAL SCREWS, THAT COME INTO CONTACT WITH OTHER DISSIMILAR MATERIALS SHALL MEET THE REQUIREMENTS OF THE 2014 FLORIDA BUILDING CODE.

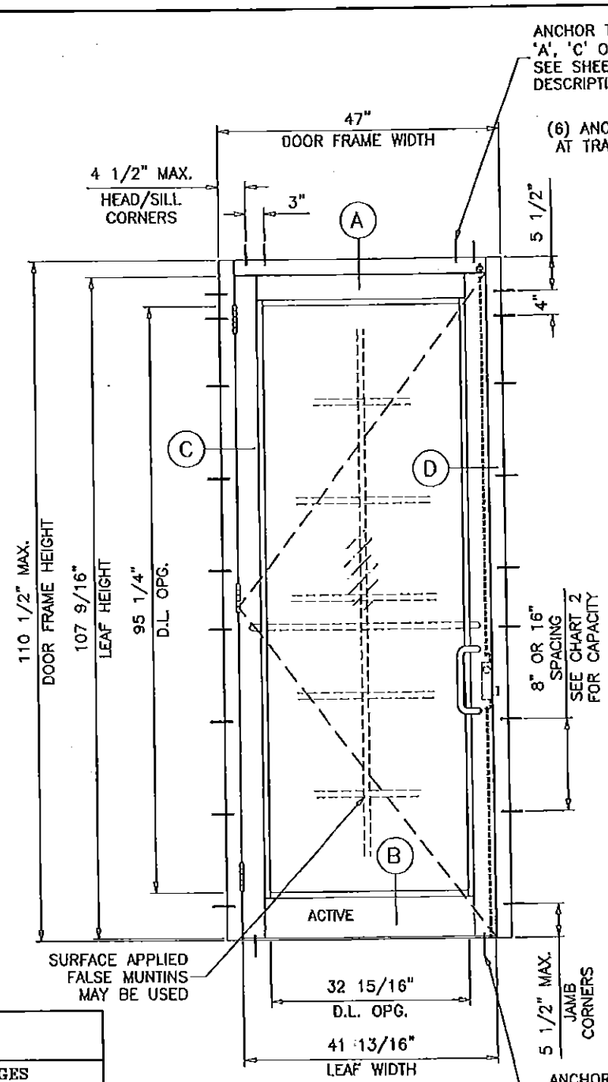

TYPICAL ELEVATION
(X)

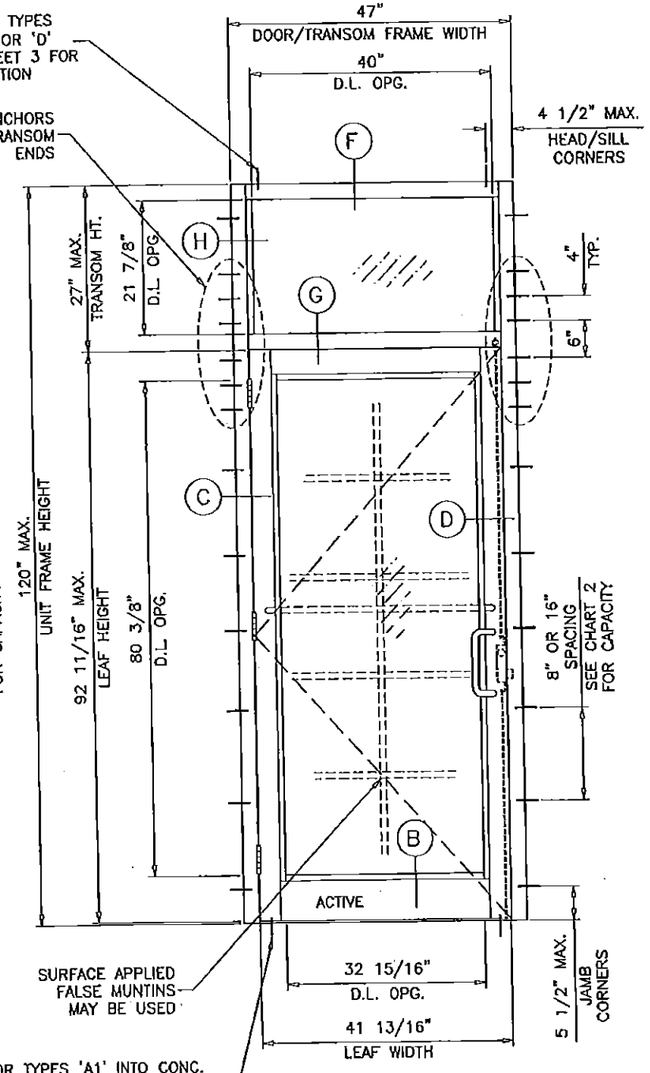

TYPICAL ELEVATION
(O/X)

NOTE:
GLASS CAPACITIES ON THIS SHEET ARE BASED ON ASTM E1300-09 (3 SEC. GUSTS) AND FLORIDA BUILDING COMMISSION DECLARATORY STATEMENT DCA05-DEC-219

TABLE #1	DOORS LOAD CAPACITY – PSF SINGLE DOORS WITHOUT TRANSOM (X) OR WITH TRANSOM* (O/X)							
DOOR DIMS.		GLASS		LOCKS			HINGES	
		TYPE 'A'	TYPE 'B'/'C'	OPTION #1	OPTION #2	OPTION #3	OPTION #1	OPTION #2
FRAME WIDTH	FRAME HEIGHT	EXT. (+) INT. (–)	EXT. (+) INT. (–)	EXT. (+) INT. (–)	EXT. (+) INT. (–)	EXT. (+) INT. (–)	EXT. (+) INT. (–)	EXT. (+) INT. (–)
47"	98-1/2"	80.0	120.0	80.0	90.0	120.0	80.0	120.0
47"	110-1/2"	80.0	120.0	80.0	90.0	120.0	80.0	120.0

SINGLE DOORS WITH SADDLE THRESHOLD LIMITED TO +90.0, –90.0 PSF
SEE SHEET 8 FOR GLASS TYPES DESCRIPTION
SEE SHEET 9 FOR LOCKS AND HINGES DESCRIPTION

TABLE #2	JAMB ANCHORS LOAD CAPACITY – PSF SINGLE DOORS WITHOUT TRANSOM (X) OR WITH TRANSOM (O/X)														
DOOR DIMS.		1/4" SHIM SPACE						3/8" SHIM SPACE				1/2" SHIM SPACE			
		SPACING AT 16" O.C.			SPACING AT 8" O.C.			AT 16" O.C.		AT 8" O.C.		AT 16" O.C.		AT 8" O.C.	
		ANCHOR 'A'	ANCHOR 'C'	ANCHOR 'D'	ANCHOR 'A'	ANCHOR 'C'	ANCHOR 'D'	ANCHOR 'A'	ANCHOR 'C'	ANCHOR 'A'	ANCHOR 'C'	ANCHOR 'A'	ANCHOR 'C'	ANCHOR 'A'	ANCHOR 'C'
FRAME WIDTH	FRAME HEIGHT	EXT.(+) INT.(–)	EXT.(+) INT.(–)	EXT.(+) INT.(–)	EXT.(+) INT.(–)	EXT.(+) INT.(–)	EXT.(+) INT.(–)	EXT.(+) INT.(–)	EXT.(+) INT.(–)	EXT.(+) INT.(–)	EXT.(+) INT.(–)	EXT.(+) INT.(–)	EXT.(+) INT.(–)	EXT.(+) INT.(–)	EXT.(+) INT.(–)
40"	110-1/2"	112.5	120.0	112.0	120.0	120.0	120.0	90.5	117.4	120.0	120.0	70.2	92.7	110.0	120.0
47"	110-1/2"	95.7	111.0	95.0	120.0	120.0	120.0	77.0	100.0	120.0	120.0	59.7	78.9	93.7	120.0

SEE SHEET 3 FOR ANCHOR DESCRIPTION

SINGLE DOORS WITH OR WITHOUT TRANSOMS USE CHARTS AS FOLLOWS FOR THE CORRESPONDING DOOR SIZE.

1- FOR GLASS TYPE, LOCK AND HINGE OPTIONS OBTAIN LOAD CAPACITIES FROM TABLE 1.
2- SELECT THRESHOLD TYPE TO BE USED FOR WATER RATING.
3- FOR JAMB ANCHORS TYPE/SHIMSPACE OBTAIN LOAD CAPACITIES FROM TABLE 2.
4- TRANSOMS FOR SINGLE DOORS ARE LIMITED TO ±90.0 PSF *

THE LOWEST VALUES FROM STEPS 1, 2, 3 AND 4 WILL GOVERN.

PRODUCT REVISED
as complying with the Florida Building Code
NOA-No. 15-0602.09
Expiration Date 12/24/2018
By
Miami-Dade Product Control

JAVAD AHMAD LICENSE No. 70592 STATE OF FLORIDA PROFESSIONAL ENGINEER 3/4/18

AL-FAROOQ CORPORATION
ENGINEERS & PRODUCT DEVELOPMENT
9360 SUNSET DRIVE, SUITE 220
MIAMI, FLORIDA 33173 (C.A.N. 3538)
TEL. (305) 264-8100 FAX. (305) 262-6978
COMP-ANL\W08-66ESW

SERIES-9000 ALUM OUTSWING FRENCH DOOR (L.M.I.)

E.S. WINDOWS, LLC
3550 N.W. 49 STREET
MIAMI, FL. 33142
TEL. (305) 638-5151 FAX. (305) 638-5158

revisions:

no	date	by	description
G	02.24.12		UPDATED TO 2010 FBC
H	05.05.15		UPDATED TO 2014 FBC
I	01.13.16		REV. PER RER COMMENTS
J	03.08.16		REV. PER RER COMMENTS

date: 07-14-08
scale: 1/2"=1'-0"
dr. by: HAMID
chk. by:

drawing no. W08-66

DOUBLE DOORS WITH OR WITHOUT TRANSOMS USE CHARTS AS FOLLOWS FOR THE CORRESPONDING DOOR SIZE

1- FOR GLASS TYPE, LOCK AND HINGE OPTIONS OBTAIN LOAD CAPACITIES FROM TABLE 3.
2- SELECT THRESHOLD TYPE TO BE USED.
3- FOR JAMB ANCHORS, TYPE/SHIMSPACE OBTAIN LOAD CAPACITIES FROM TABLE 4.
4- FOR HEAD ANCHORS, TYPE/SHIMSPACE OBTAIN LOAD CAPACITIES FROM TABLE 5.

THE LOWEST VALUES FROM STEPS 1, 3 AND 4 WILL GOVERN.

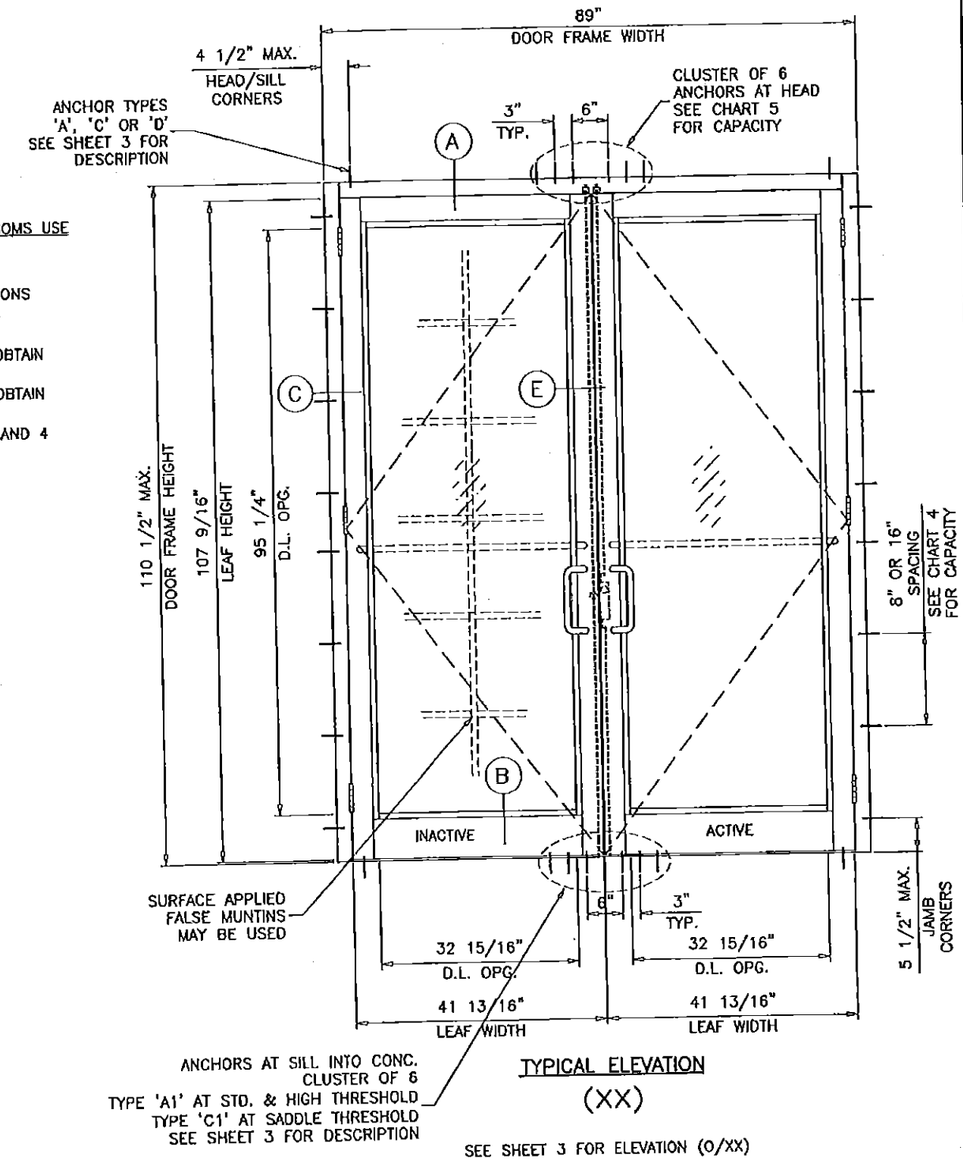

TYPICAL ELEVATION

(XX)

SEE SHEET 3 FOR ELEVATION (O/XX)

NOTE:
GLASS CAPACITIES ON THIS SHEET ARE BASED ON ASTM E1300-09 (3 SEC. GUSTS) AND FLORIDA BUILDING COMMISSION DECLARATORY STATEMENT DCA05-DEC-219

TABLE #3	DOORS LOAD CAPACITY - PSF DOUBLE DOOR WITHOUT TRANSOM (XX) OR WITH TRANSOM (O/XX)							
DOOR DIMS.		GLASS		LOCKS			HINGES	
		TYPE 'A'	TYPE 'B'/'C'	OPTION #1	OPTION #2	OPTION #3	OPTION #1	OPTION #2
FRAME WIDTH	FRAME HEIGHT	EXT. (+) INT. (-)	EXT. (+) INT. (-)	EXT. (+) INT. (-)	EXT. (+) INT. (-)	EXT. (+) INT. (-)	EXT. (+) INT. (-)	EXT. (+) INT. (-)
89"	98-1/2"	80.0	90.0	80.0	90.0	90.0	80.0	90.0
89"	110-1/2"	80.0	80.0	80.0	80.0	80.0	80.0	90.0

SEE SHEET 8 FOR GLASS TYPES DESCRIPTION
SEE SHEET 9 FOR LOCKS AND HINGES DESCRIPTION

TABLE #4	JAMB ANCHORS LOAD CAPACITY - PSF DOUBLE DOORS WITHOUT TRANSOM (X) OR WITH TRANSOM (O/X)														
DOOR DIMS.		1/4" SHIM SPACE						3/8" SHIM SPACE				1/2" SHIM SPACE			
		SPACING AT 16" O.C.			SPACING AT 8" O.C.			AT 16" O.C.		AT 8" O.C.		AT 16" O.C.		AT 8" O.C.	
		ANCHOR 'A'	ANCHOR 'C'	ANCHOR 'D'	ANCHOR 'A'	ANCHOR 'C'	ANCHOR 'D'	ANCHOR 'A'	ANCHOR 'C'	ANCHOR 'A'	ANCHOR 'C'	ANCHOR 'A'	ANCHOR 'C'	ANCHOR 'A'	ANCHOR 'C'
FRAME WIDTH	FRAME HEIGHT	EXT.(+) INT.(-)	EXT.(+) INT.(-)	EXT.(+) INT.(-)	EXT.(+) INT.(-)	EXT.(+) INT.(-)	EXT.(+) INT.(-)	EXT.(+) INT.(-)	EXT.(+) INT.(-)	EXT.(+) INT.(-)	EXT.(+) INT.(-)	EXT.(+) INT.(-)	EXT.(+) INT.(-)	EXT.(+) INT.(-)	EXT.(+) INT.(-)
75"	110-1/2"	90.0	90.0	90.0	90.0	90.0	90.0	90.0	90.0	90.0	90.0	74.9	90.0	90.0	90.0
89"	110-1/2"	90.0	88.7	90.0	90.0	90.0	90.0	81.3	88.7	90.0	90.0	63.1	83.3	90.0	90.0

SEE SHEET 3 FOR ANCHOR DESCRIPTION

TABLE #5	HEAD ANCHORS LOAD CAPACITY - PSF DOUBLE DOOR WITHOUT TRANSOM (XX) OR WITH TRANSOM (O/XX)							
DOOR DIMS.		1/4" SHIM SPACE			3/8" SHIM SPACE		1/2" SHIM SPACE	
		ANCHOR TYPE 'A'	ANCHOR TYPE 'C'	ANCHOR TYPE 'D'	ANCHOR TYPE 'A'	ANCHOR TYPE 'C'	ANCHOR TYPE 'A'	ANCHOR TYPE 'C'
FRAME WIDTH	FRAME HEIGHT	EXT. (+) INT. (-)	EXT. (+) INT. (-)	EXT. (+) INT. (-)	EXT. (+) INT. (-)	EXT. (+) INT. (-)	EXT. (+) INT. (-)	EXT. (+) INT. (-)
75"	98-1/2"	90.0	90.0	90.0	90.0	90.0	73.0	90.0
89"		90.0	90.0	90.0	79.2	90.0	61.5	81.2
75"	110-1/2"	90.0	90.0	90.0	83.8	90.0	65.1	85.9
89"		90.0	90.0	90.0	70.6	90.0	54.8	72.3

SEE SHEET 3 FOR ANCHOR DESCRIPTION

PRODUCT REVISED
as complying with the Florida Building Code
NOA-No. 15-0602.09
Expiration Date 12/24/2018
By
Miami-Dade Product Control

JAVAD AHMAD LICENSE No. 70592 STATE OF FLORIDA PROFESSIONAL ENGINEER

AL-FAROOQ CORPORATION
ENGINEERS & PRODUCT DEVELOPMENT
9360 SUNSET DRIVE, SUITE 220
MIAMI, FLORIDA 33173 (C.A.N. 3538)
TEL. (305) 264-3100 FAX. (305) 262-6978
COMP-ANL\W08-66ESW

SERIES-9000 ALUM OUTSWING FRENCH DOOR (L.M.I.)

E.S. WINDOWS, LLC
3550 N.W. 49 STREET
MIAMI, FL. 33142
TEL (305) 638-5151 FAX. (305) 638-5158

revisions:			
no	date	by	description
G	02.24.12		NO CHANGE THIS SHEET
H	05.05.15		UPDATED TO 2014 FBC
I	01.13.16		REV. PER RER COMMENTS
J	03.08.16		NO CHANGE THIS SHEET

date: 07-14-08
scale: 1/2"=1'-0"
dr. by: HAMID
chk. by:

drawing no. W08-66

TYPICAL ANCHORS: SEE ELEV. FOR SPACING

AT HEAD OR JAMBS

TYPE 'A'- 1/4" X 5" ULTRACON BY 'ELCO' (Fu=177 KSI, Fy=155 KSI)

THRU 1BY OR 2BY WOOD BUCKS INTO CONCRETE OR MASONRY
WITH 1-1/4" MIN. EMBED INTO CONCRETE (HEAD/JAMBS)
WITH 1-1/4" MIN. EMBED INTO FILLED BLOCKS (JAMBS)

DIRECTLY INTO CONCRETE OR MASONRY
WITH 2" MIN. EMBED INTO CONCRETE (HEAD/JAMBS)
WITH 2" MIN. EMBED INTO FILLED BLOCKS (JAMBS)

ANCHOR EDGE DISTANCES

INTO CONCRETE AND MASONRY = 2-1/2" MIN.
INTO WOOD STRUCTURE = 1" MIN.

AT HEAD OR JAMBS

TYPE 'C'- 5/16" X 5" ULTRACON BY 'ELCO'(Fu=177 KSI, Fy=155 KSI)

THRU 1BY OR 2BY WOOD BUCKS INTO CONCRETE OR MASONRY
WITH 1-1/4" MIN. EMBED INTO CONCRETE (HEAD/JAMBS)
WITH 1-1/4" MIN. EMBED INTO FILLED BLOCKS (JAMBS)

DIRECTLY INTO CONCRETE OR MASONRY
WITH 2" MIN. EMBED INTO CONCRETE (HEAD/JAMBS)
WITH 2" MIN. EMBED INTO FILLED BLOCKS (JAMBS)

ANCHOR EDGE DISTANCES

INTO CONCRETE AND MASONRY = 3-1/8" MIN.
INTO WOOD STRUCTURE = 1-1/4" MIN.

AT HEAD OR JAMBS

TYPE 'D'- 1/4" TEKS OR SELF DRILLING SCREWS (GRADE 5 CRS)

INTO METAL STRUCTURES
STEEL : 1/8" THK. MIN. (Fy = 36 KSI MIN.)
(STEEL IN CONTACT WITH ALUMINUM TO BE PLATED OR PAINTED)

INTO MIAMI-DADE COUNTY APPROVED MULLIONS
ALUMINUM : 1/8" THK. MIN. (6063-T5 MIN.) (NO SHIM SPACE)

ANCHOR EDGE DISTANCES

INTO METAL STRUCTURE = 1/2" MIN.

AT SILL

TYPE 'A1'- 1/4" X 1-3/4" ULTRACON BY 'ELCO' (Fu=177 KSI, Fy=155 KSI)

DIRECTLY INTO CONCRETE (FOR STD. AND HIGH THRESHOLD)
WITH 1-1/2" MIN. EMBED INTO CONCRETE

ANCHOR EDGE DISTANCES

INTO CONCRETE = 2-1/2" MIN.

AT SILL

TYPE 'C1'- 5/16" X 2" ULTRACON BY 'ELCO' (Fu=177 KSI, Fy=155 KSI)

DIRECTLY INTO CONCRETE (FOR SADDLE THRESHOLD)
WITH 1-1/2" MIN. EMBED INTO CONCRETE

ANCHOR EDGE DISTANCES

INTO CONCRETE = 3-1/8" MIN.

WOOD AT HEAD OR JAMBS SG = 0.55 MIN.
CONCRETE AT HEAD, SILL OR JAMBS f'c = 3000 PSI MIN.
C-90 GROUT FILLED BLOCK AT JAMBS f'm = 2000 PSI MIN.

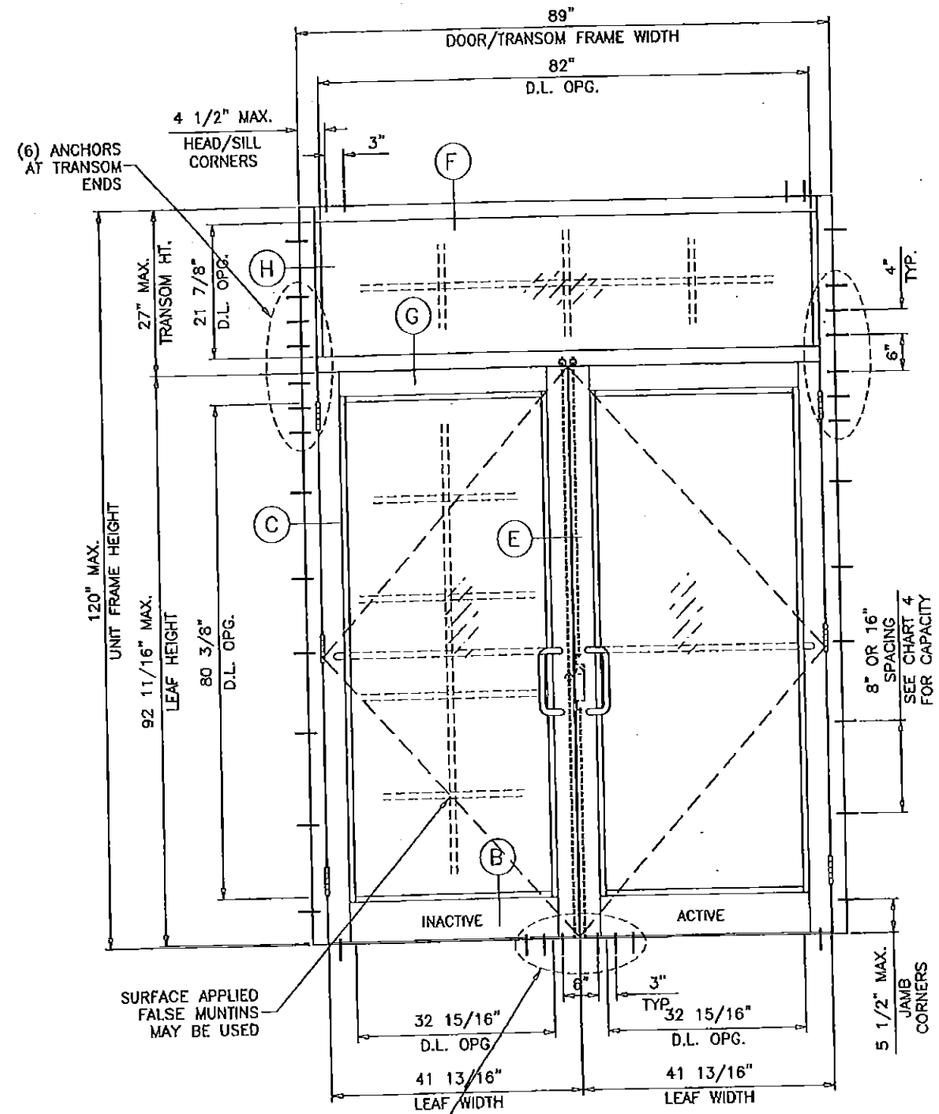

TYPICAL ELEVATION
(O/XX)

SEE CHARTS ON SHEET 2 FOR DOOR AND TRANSOM LOAD CAPACITY

1X OR 2X WOOD BUCKS AND METAL STRUCTURES NOT BY E.S. WDW. MUST SUPPORT LOADS IMPOSED BY GLAZING SYSTEM AND TRANSFER THEM TO THE BUILDING STRUCTURE.

PRODUCT REVISED
as complying with the Florida Building Code
NOA-No. 15-0602.09
Expiration Date 12/24/2018
By
Miami-Dade Product Control

JAVAD AHMAD
LICENSE
No. 70692
STATE OF FLORIDA
PROFESSIONAL ENGINEER
3/14/16

AL-FAROOQ CORPORATION
ENGINEERS & PRODUCT DEVELOPMENT
9360 SUNSET DRIVE, SUITE 220
MIAMI, FLORIDA 33173 (C.A.N. 3538)
TEL. (305) 264-9100 FAX. (305) 262-6978
COMP-ANL\W08-66ESW

SERIES-9000 ALUM OUTSWING FRENCH DOOR (L.M.I.)

E.S. WINDOWS, LLC
3550 N.W. 49 STREET
MIAMI, FL 33142
TEL. (305) 638-5151 FAX. (305) 638-5158

revisions:

no	date	by	description
G	02.24.12		NO CHANGE THIS SHEET
H	05.05.15		UPDATED TO 2014 FBC
I	01.13.16		REV. PER RER COMMENTS
J	03.08.16		NO CHANGE THIS SHEET

date: 07-14-08
scale: 1/2"=1'-0"
dr. by: HAMID
chk. by:

drawing no.
W08-66

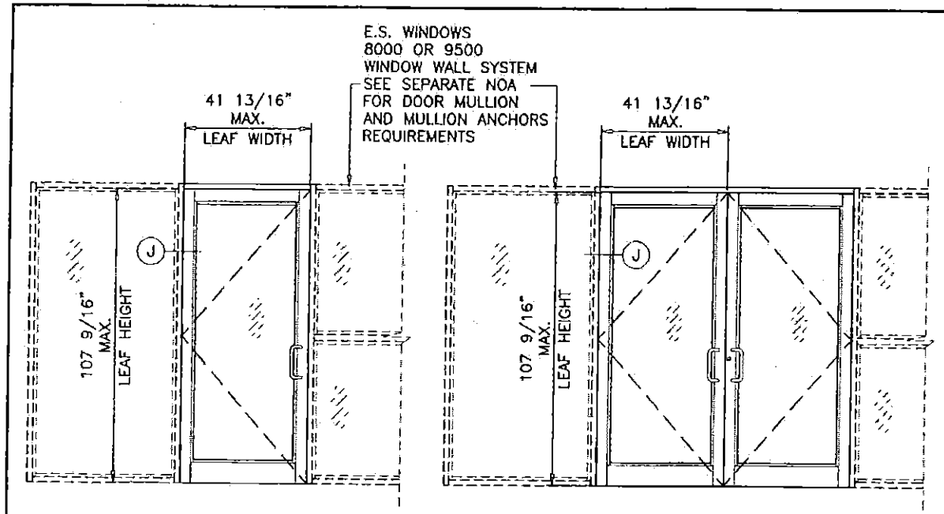

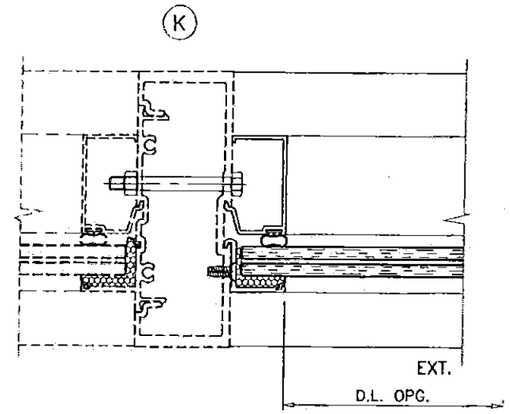

MIAMI-DADE COUNTY APPROVED
SERIES 8000 WINDOW WALL SYSTEM BY 'E.S. WINDOWS'
UNDER SEPARATE APPROVAL.

LOWER VALUES FROM DOOR CAPACITY CHARTS OR
STOREFRONT NOA WILL APPLY TO ENTIRE SYSTEM.

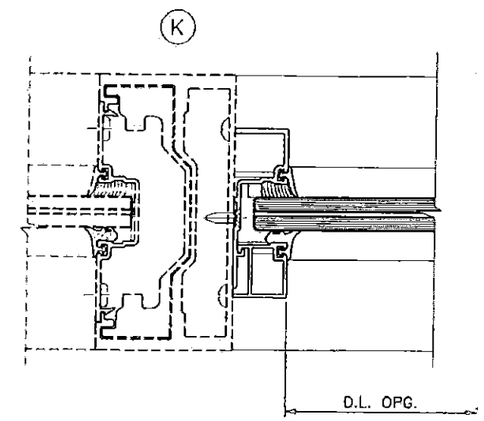

MIAMI-DADE COUNTY APPROVED
SERIES 9500 WINDOW WALL SYSTEM BY 'E.S. WINDOWS'
UNDER SEPARATE APPROVAL.

LOWER VALUES FROM DOOR CAPACITY CHARTS OR
STOREFRONT NOA WILL APPLY TO ENTIRE SYSTEM.

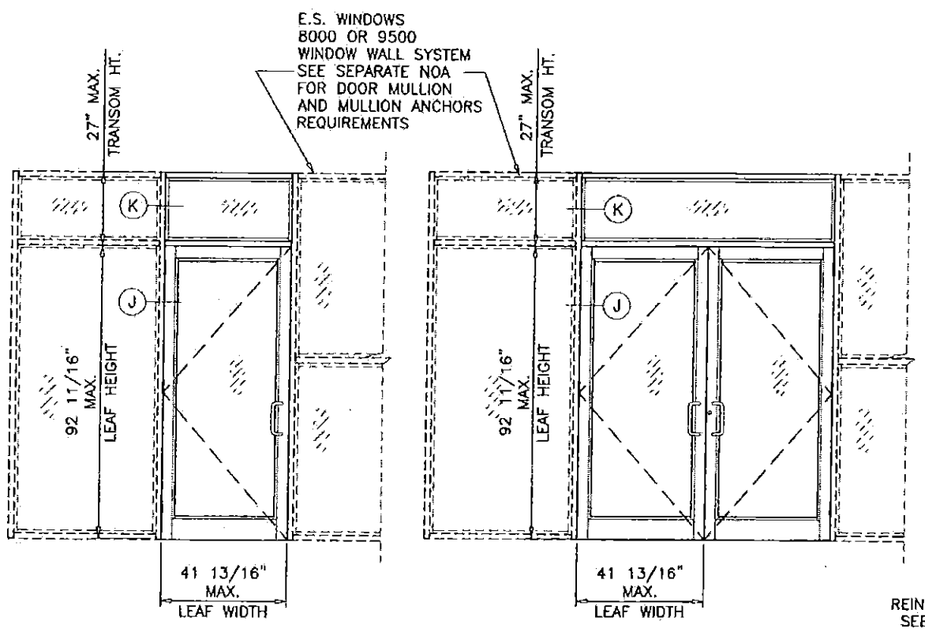

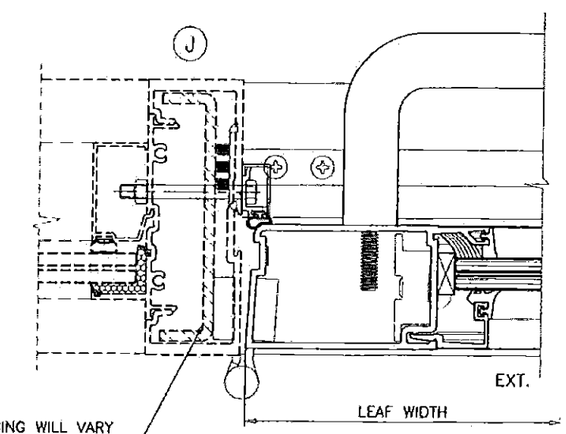

REINFORCING WILL VARY
SEE CURRENT NOA OF
SERIES 8000
WINDOW WALL SYSTEM
FOR DETAILS

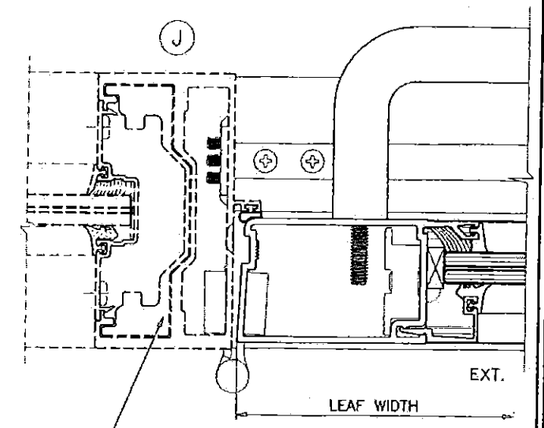

REINFORCING WILL VARY
SEE CURRENT NOA OF
SERIES 9500
WINDOW WALL SYSTEM
FOR DETAILS

PRODUCT REVISED
as complying with the Florida Building Code
NOA-No. 15-0602.09
Expiration Date 12/24/2018
By
Miami-Dade Product Control

JAVAD AHMAD
LICENSE
No. 70592
3-14-16
STATE OF FLORIDA
PROFESSIONAL ENGINEER

AL-FAROOQ CORPORATION
ENGINEERS & PRODUCT DEVELOPMENT
9360 SUNSET DRIVE, SUITE 220
MIAMI, FLORIDA 33173 (C.A.N. 3538)
TEL. (305) 264-8100 FAX. (305) 262-6978

COMP-ANL\W08-66ESW

SERIES-9000 ALUM OUTSWING FRENCH DOOR (L.M.I.)

E.S. WINDOWS, LLC
3550 N.W. 49 STREET
MIAMI, FL. 33142
TEL. (305) 638-5151 FAX. (305) 638-5158

revisions:

no	date	by	description
J	03.08.16		REV. PER RER COMMENTS

date: 07-14-08
scale: 1/2"=1'-0"
dr. by: HAMID
chk. by:

drawing no.
W08-66

sheet 3.1 of 11

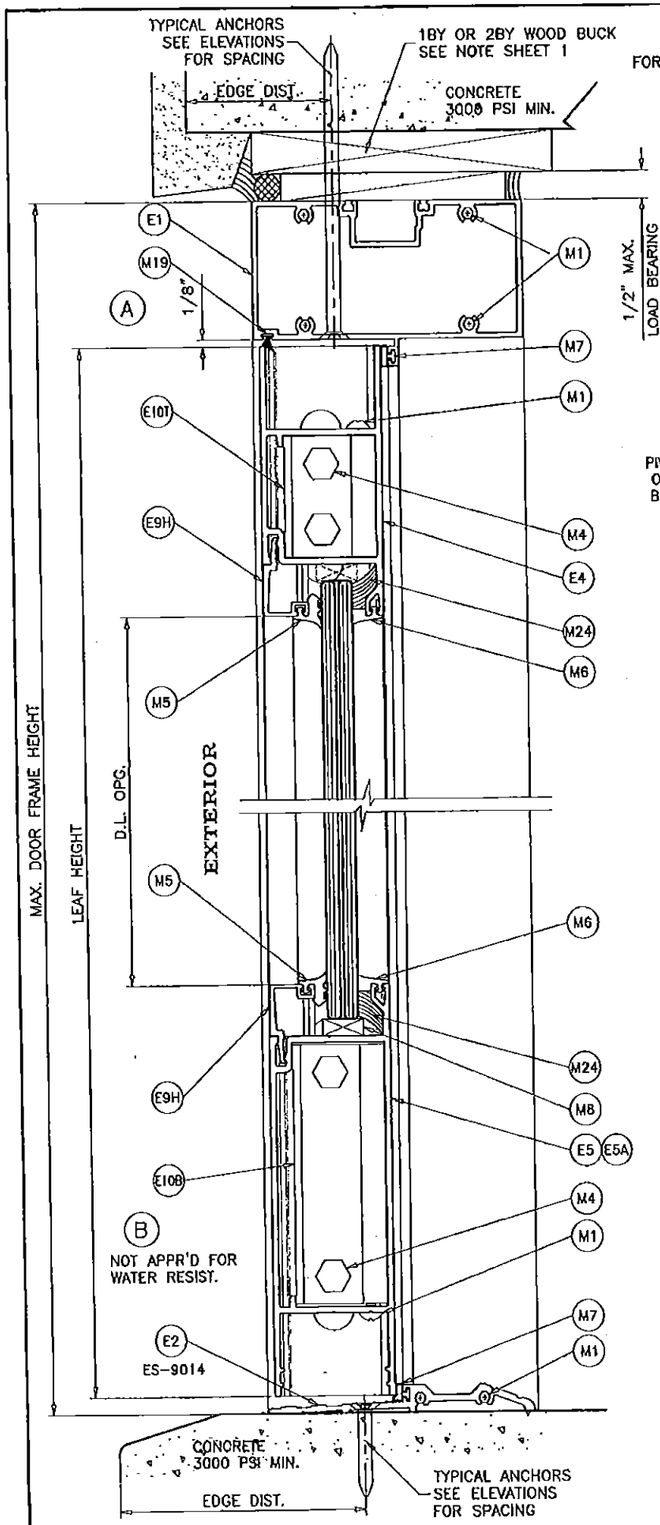

STANDARD THRESHOLD

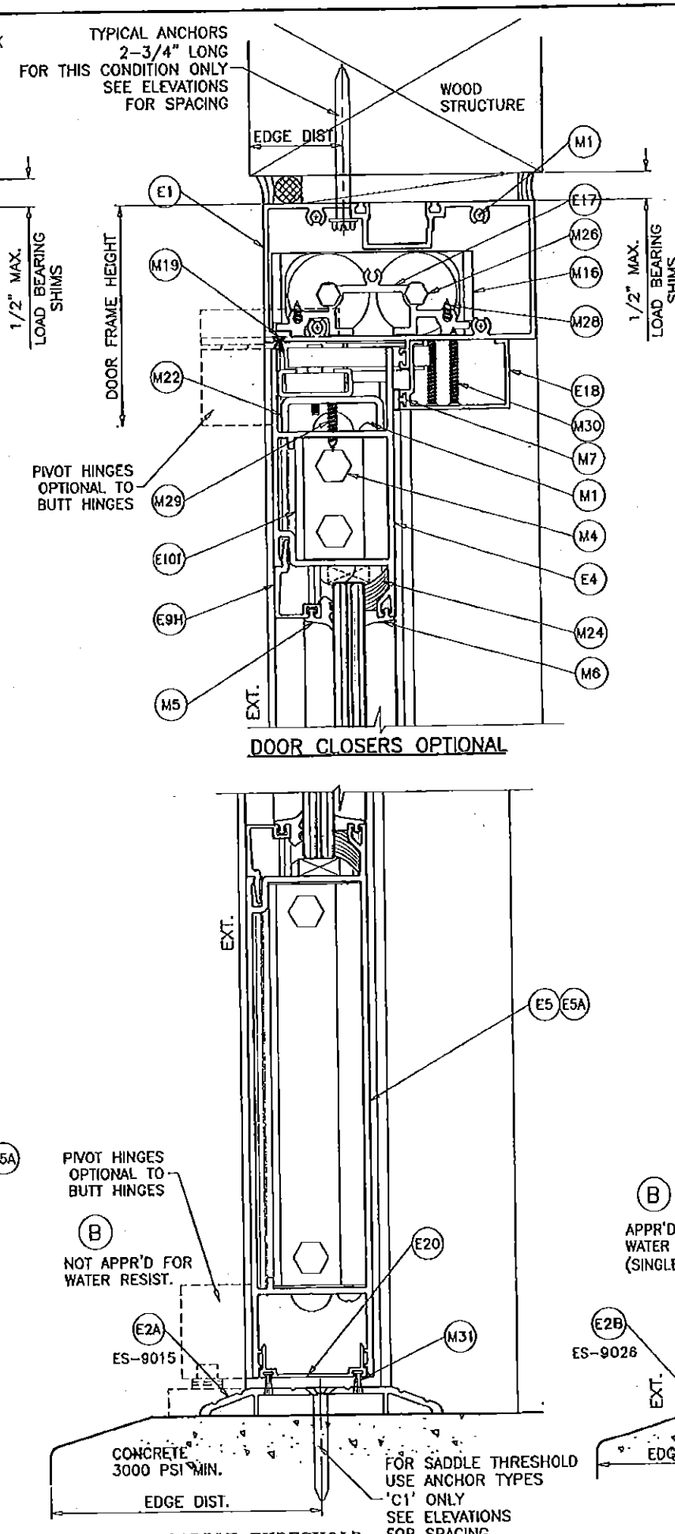

SADDLE THRESHOLD

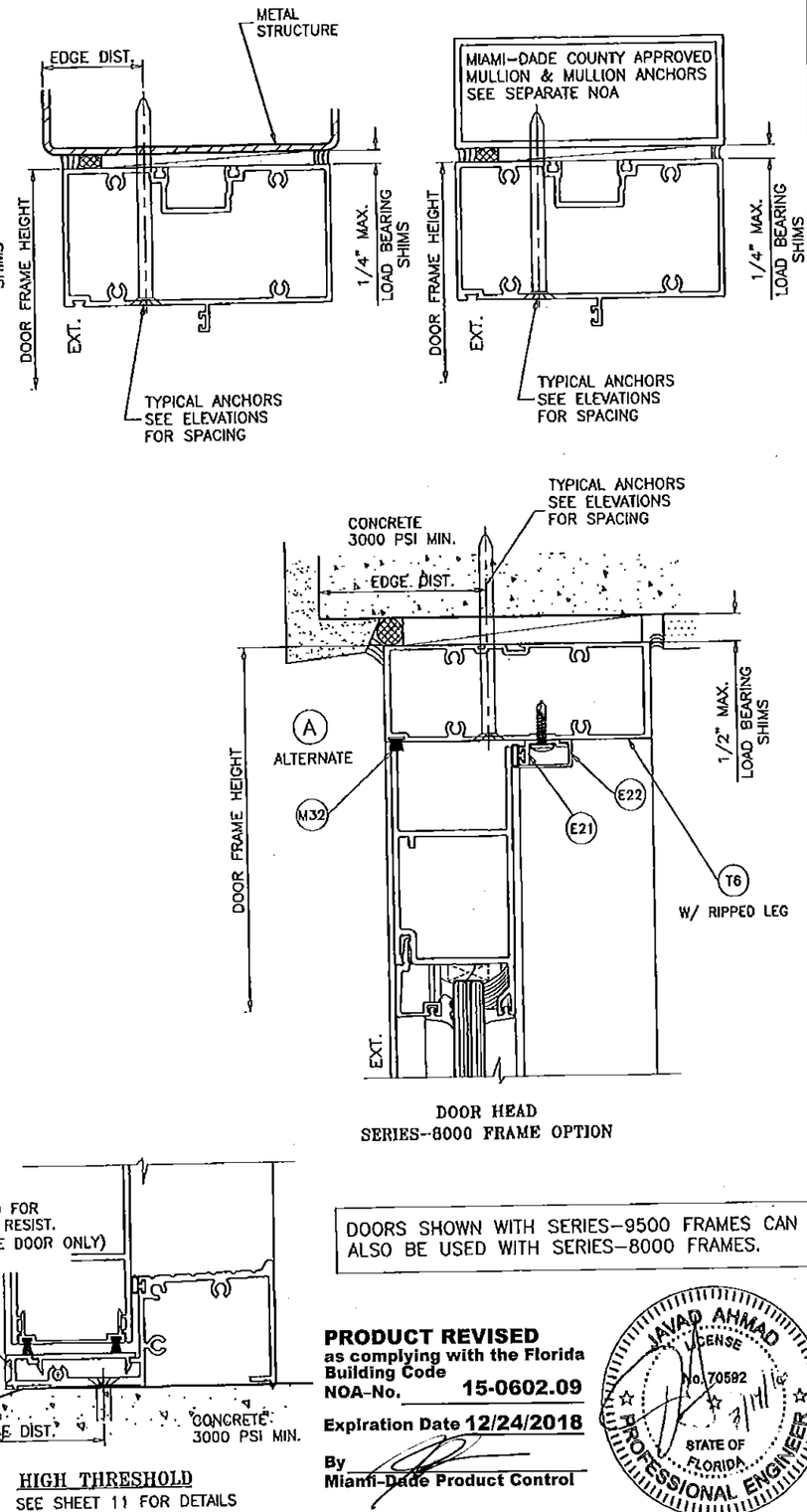

DOOR HEAD
SERIES-8000 FRAME OPTION

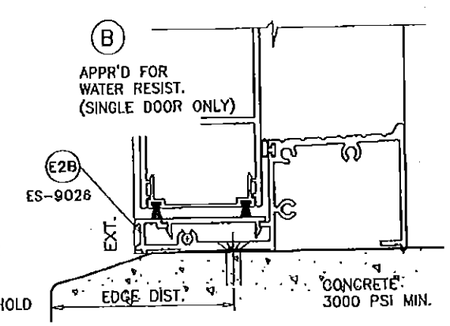

HIGH THRESHOLD
SEE SHEET 11 FOR DETAILS AND LIMITATIONS

DOORS SHOWN WITH SERIES-9500 FRAMES CAN ALSO BE USED WITH SERIES-8000 FRAMES.

PRODUCT REVISED
as complying with the Florida Building Code
NOA-No. 15-0602.09
Expiration Date 12/24/2018
By
Miami-Dade Product Control

JAVAD AHMAD
LICENSE
No. 70592
STATE OF FLORIDA
PROFESSIONAL ENGINEER

AL-FAROOQ CORPORATION
ENGINEERS & PRODUCT DEVELOPMENT
9360 SUNSET DRIVE, SUITE 220
MIAMI, FLORIDA 33173 (C.A.N. 3538)
TEL (305) 264-8100 FAX. (305) 262-6978
COMP-ANL\W08-66ESW

SERIES-9000 ALUM OUTSWING FRENCH DOOR (L.M.I.)

E.S. WINDOWS, LLC
3550 N.W. 49 STREET
MIAMI, FL. 33142
TEL. (305) 638-5151 FAX. (305) 638-5158

revisions:

no	date	by	description
G	02.24.12		NO CHANGE THIS SHEET
H	05.05.15		UPDATED TO 2014 FBC
I	01.13.16		REV. PER RER COMMENTS
J	03.08.16		REV. PER RER COMMENTS

date: 07-14-08
scale: 3/8" = 1"
dr. by: HAMID
chk. by:

drawing no. W08-66

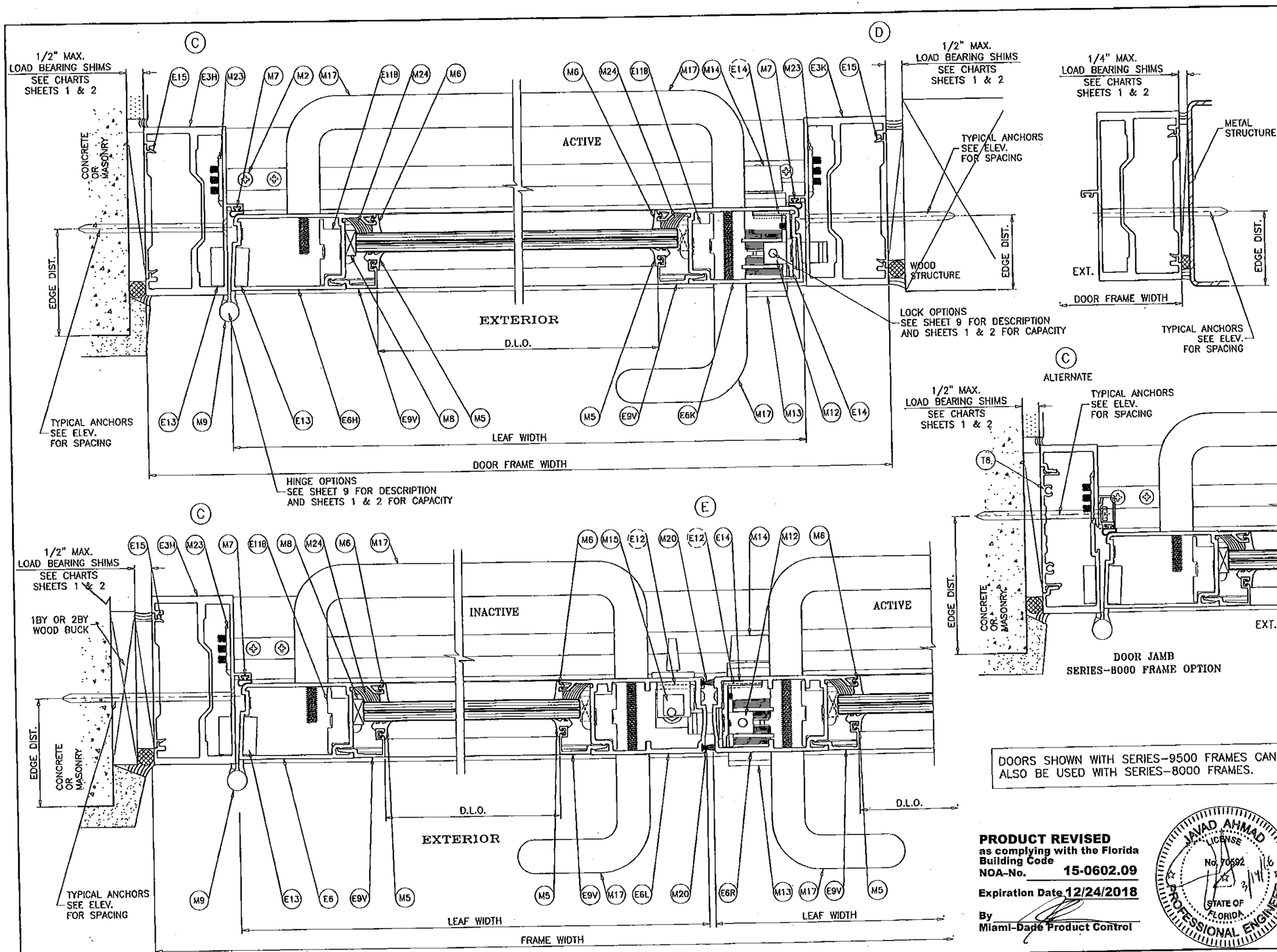

DOORS SHOWN WITH SERIES-9500 FRAMES CAN ALSO BE USED WITH SERIES-8000 FRAMES.

PRODUCT REVISED
as complying with the Florida Building Code
NOA-No. 15-0602.09
Expiration Date 12/24/2018
By
Miami-Dade Product Control

JAVAD AHMAD
LICENSE
No. 70592
3/14/16
STATE OF FLORIDA
PROFESSIONAL ENGINEER

AL-FAROOQ CORPORATION
ENGINEERS & PRODUCT DEVELOPMENT
9360 SUNSET DRIVE, SUITE 220
MIAMI, FLORIDA 33173 (C.A.N. 3538)
TEL. (305) 264-8100 FAX. (305) 262-6978

COMP-ANL\W08-66ESW

SERIES-9000 ALUM OUTSWING FRENCH DOOR (L.M.I.)

E.S. WINDOWS, LLC
3550 N.W. 49 STREET
MIAMI, FL 33142
TEL. (305) 638-5151 FAX. (305) 638-5158

revisions:		
no	date	by description
G	02.24.12	NO CHANGE THIS SHEET
H	05.05.15	UPDATED TO 2014 FBC
I	01.13.16	REV. PER RER COMMENTS
J	03.08.16	NO CHANGE THIS SHEET

date: 07-14-08
scale: 3/8" = 1"
dr. by: HAMID
chk. by:

drawing no. W08-66

sheet 5 of 11

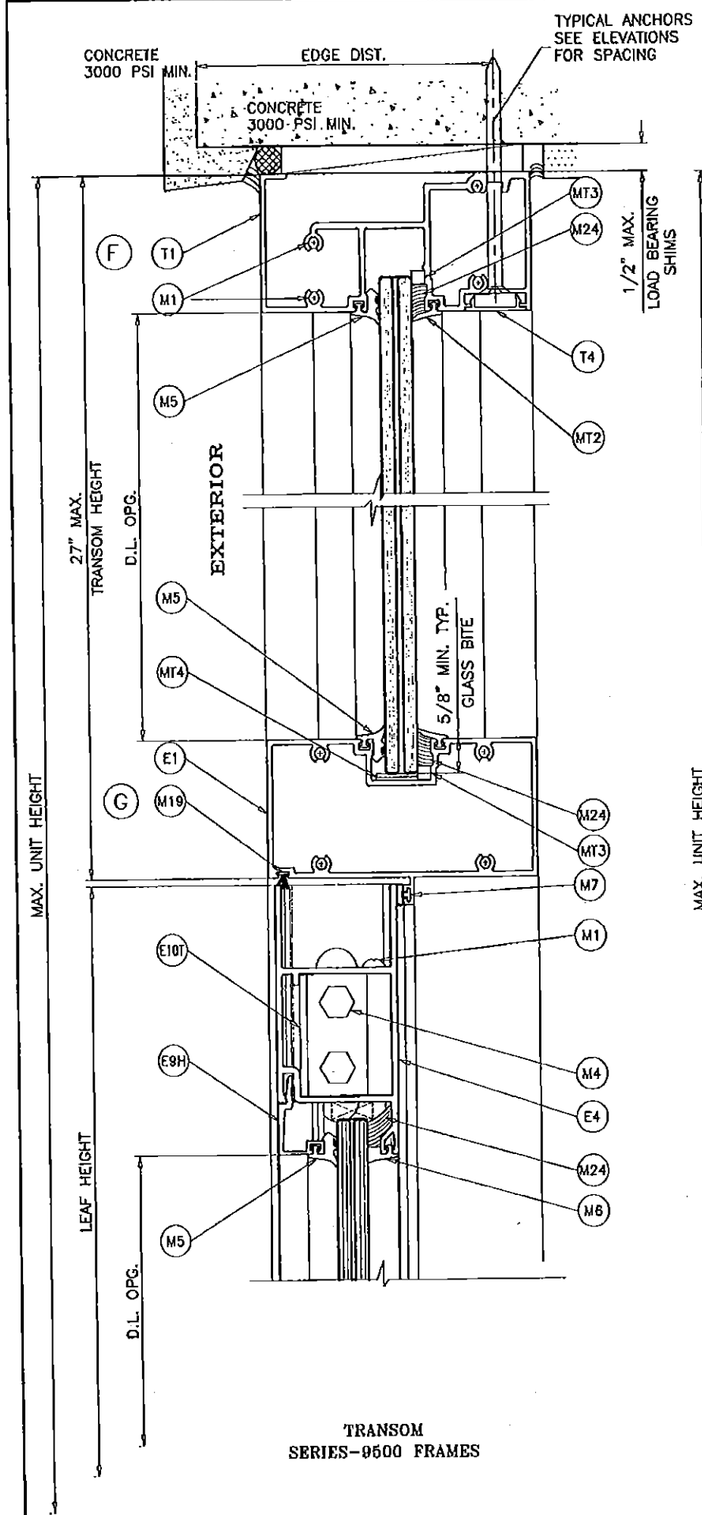

TRANSOM
SERIES-9500 FRAMES

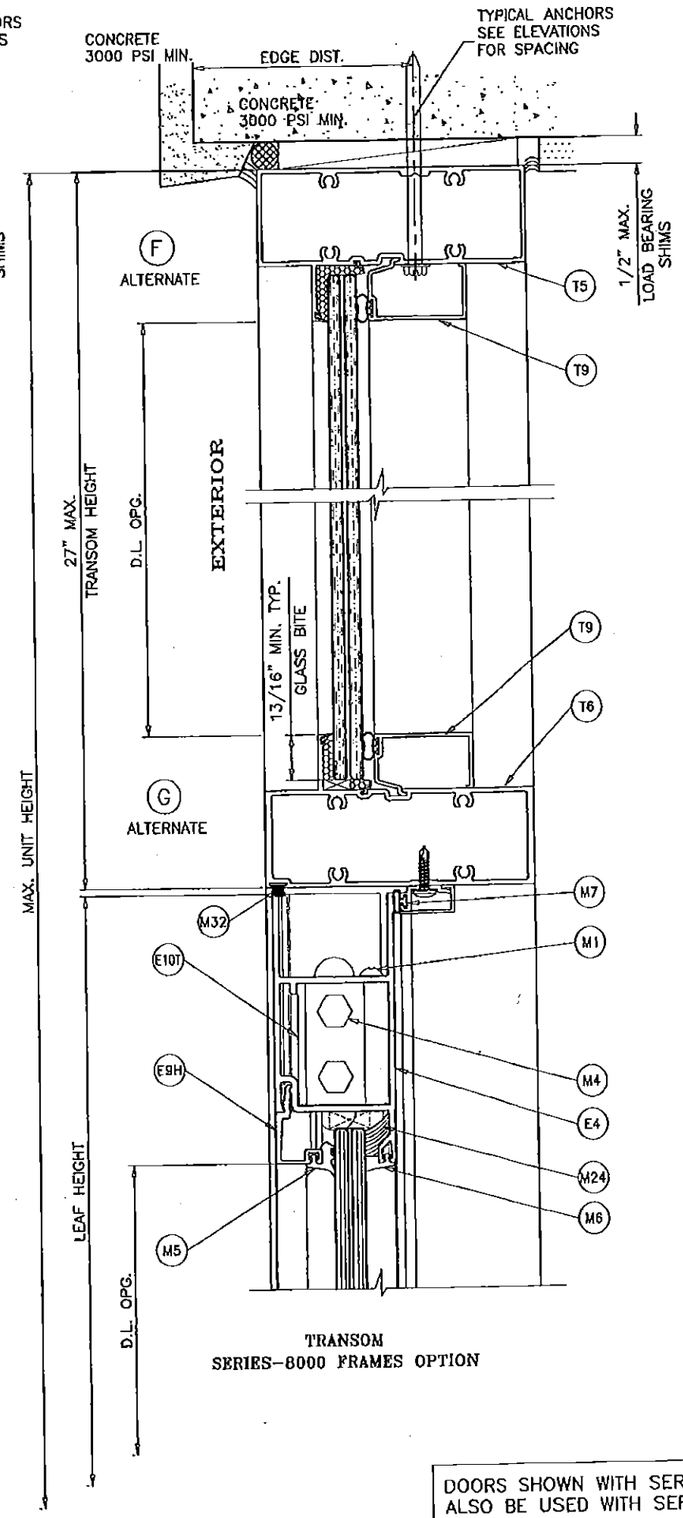

TRANSOM
SERIES-8000 FRAMES OPTION

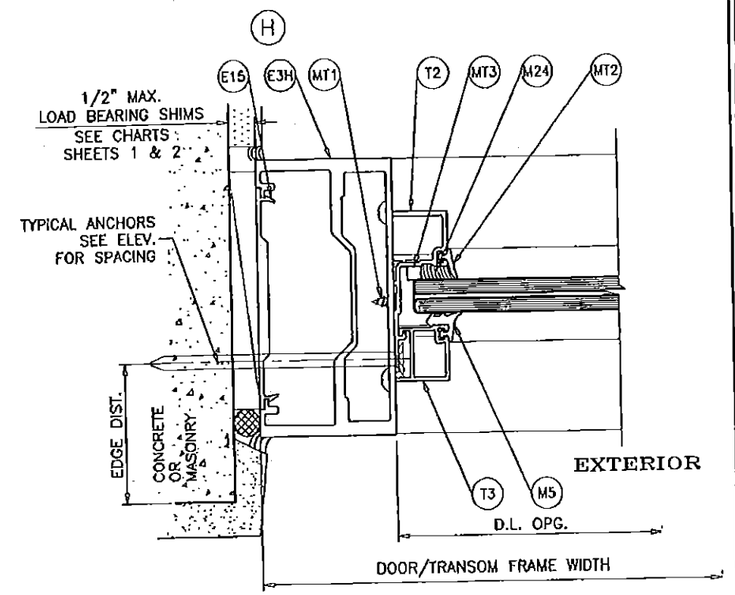

TRANSOM
SERIES-9500 FRAMES

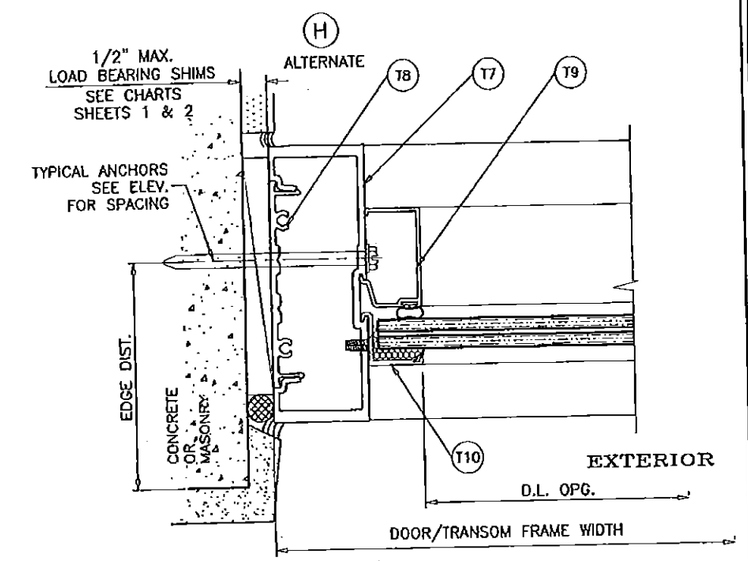

TRANSOM JAMB
SERIES-8000 FRAMES OPTION

DOORS SHOWN WITH SERIES-9500 FRAMES CAN ALSO BE USED WITH SERIES-8000 FRAMES.

PRODUCT REVISED
as complying with the Florida Building Code
NOA-No. 15-0602.09
Expiration Date 12/24/2018
By
Miami-Dade Product Control

JAVAD AHMAD
LICENSE
No. 70592
STATE OF FLORIDA
PROFESSIONAL ENGINEER

AL-FAROOQ CORPORATION
ENGINEERS & PRODUCT DEVELOPMENT
9360 SUNSET DRIVE, SUITE 220
MIAMI, FLORIDA 33173 (C.A.N. 3538)
TEL. (305) 264-8100 FAX. (305) 262-6978

COMP-ANL\W08-66ESW

SERIES-9000 ALUM. OUTSWING FRENCH DOOR (L.M.I.)

E.S. WINDOWS, LLC
3550 N.W. 49 STREET
MIAMI, FL. 33142
TEL. (305) 638-5151 FAX. (305) 638-5158

revisions:

no	date	by	description
G	02.24.12		NO CHANGE THIS SHEET
H	05.05.15		UPDATED TO 2014 FBC
I	01.13.16		REV. PER RER COMMENTS
J	03.08.16		REV. PER RER COMMENTS

date: 07-14-08
scale: 3/8" = 1"
dr. by: HAMID
chk. by:

drawing no.
W08-66

sheet 6 of 11

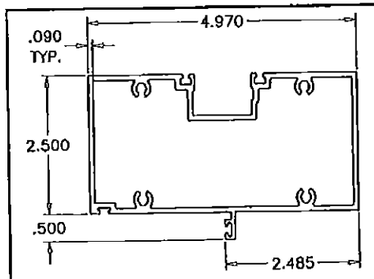

E1 DOOR HEADER Series 9000

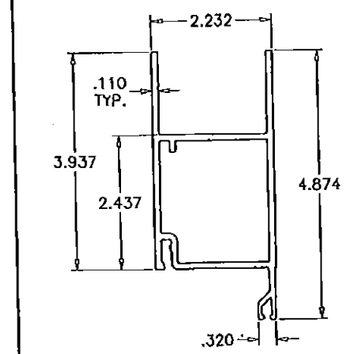

E4 TOP RAIL

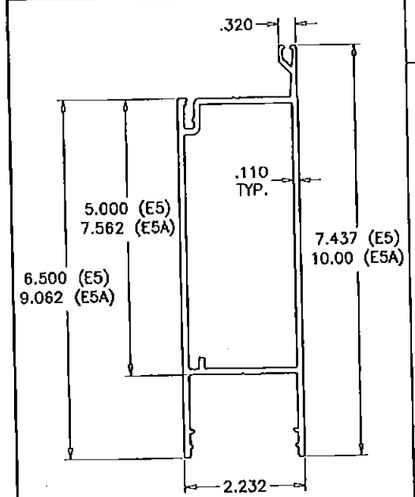

E5 STD. BOTTOM RAIL
E5A HI-PROFILE BOTTOM RAIL

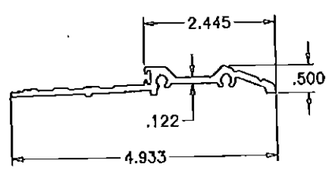

E2 THRESHOLD
ES9014

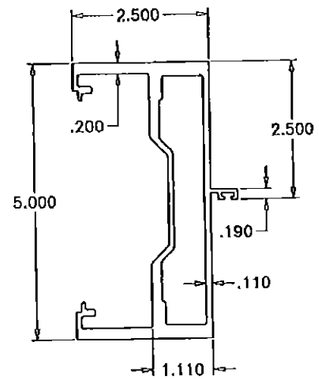

E3 DOOR JAMB Series 9000

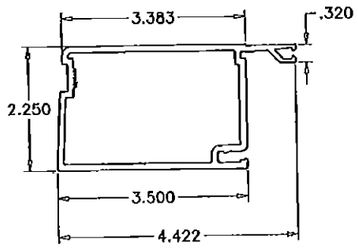

E6 HINGE/LOCK STILE

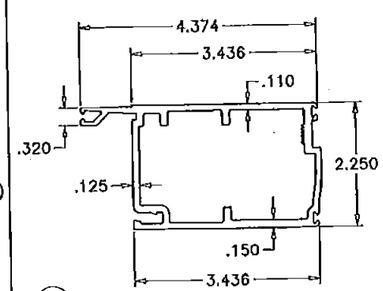

E7 MEETING STILE – INACTIVE LEAF

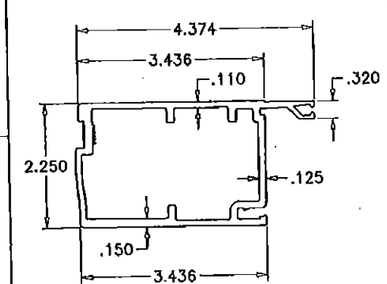

E8 MEETING STILE – ACTIVE LEAF

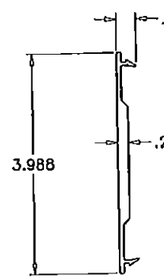

E15 JAMB FILLER

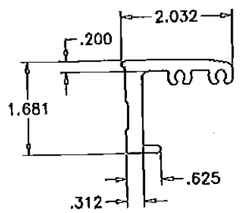

E10 CORNER BLOCK

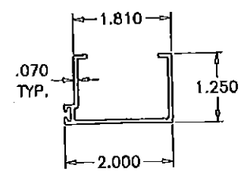

E18 CLOSURE DOOR STOP

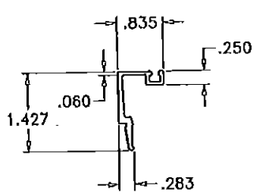

E9 GLASS STOP

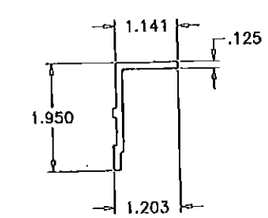

E14 LOCK BACK UP PLATE

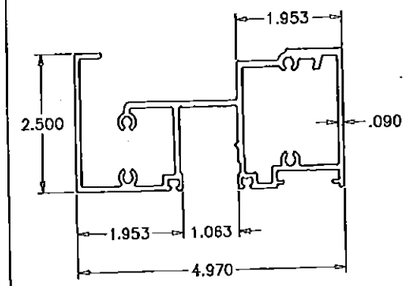

T1 TRANSOM HEADER Series 9500

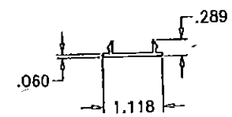

T4 HEAD COVER

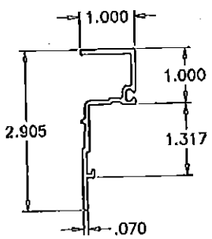

T2 TRANSOM ADAPTER

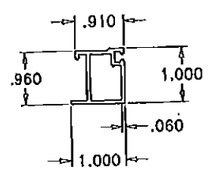

T3 TRANSOM GLASS STOP

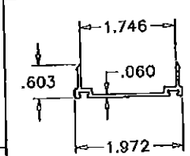

E20 DOOR SWEEP

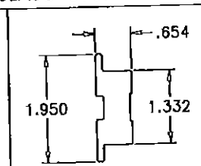

E11 CORNER PLATE

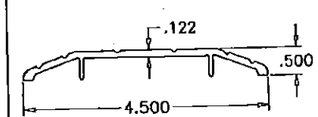

E2A ALTERNATE THRESHOLD
ES9015

SEE SHEET 11 FOR HIGH THRESHOLD DETAIL

ALTERNATE OPTION (Series S-8000)

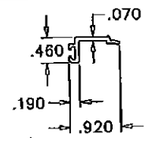

E21 DOOR STOP

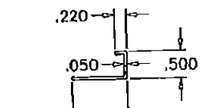

E22 DOOR STOP COVER

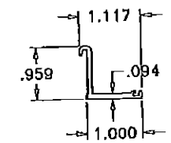

T10 TRANSOM GLAZING ADAPTER

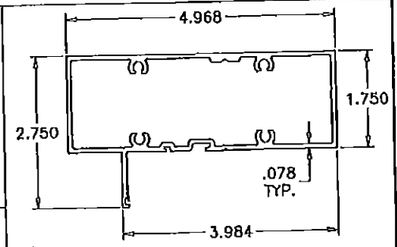

T5 TRANSOM HEAD S-8000

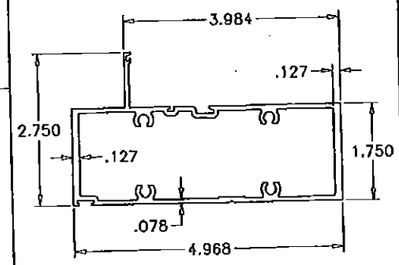

T6 HORIZONTAL AT DOOR S-8000

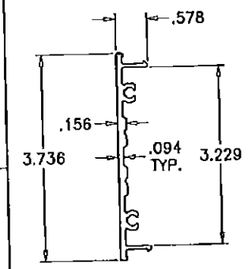

T8 JAMB FILLER S-8000

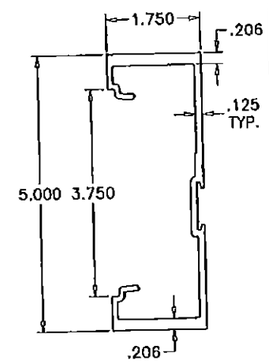

T7 TRANSOM JAMB S-8000

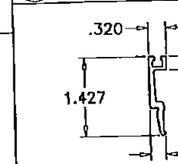

E9.1 GLASS STOP
(INSUL. LAM. GLASS)

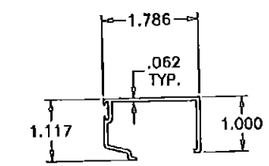

T9 TRANSOM GLASS STOP S-8000

PRODUCT REVISED
as complying with the Florida Building Code
NOA-No. 15-0602.09
Expiration Date 12/24/2018
By
Miami-Dade Product Control

JAVAD AHMAD
LICENSE
No. 70582
STATE OF FLORIDA
PROFESSIONAL ENGINEER

AL-FAROOQ CORPORATION
ENGINEERS & PRODUCT DEVELOPMENT
9360 SUNSET DRIVE, SUITE 220
MIAMI, FLORIDA 33173 (C.A.N. 3538)
TEL. (305) 264-8100 FAX. (305) 262-6978

COMP-ANL\W08-66ESW

SERIES-9000 ALUM. OUTSWING FRENCH DOOR (L.M.I.)

E.S. WINDOWS, LLC
3550 N.W. 49 STREET
MIAMI, FL. 33142
TEL. (305) 638-5151 FAX. (305) 638-5158

revisions:

no	date	by	description
G	02.24.12		NO CHANGE THIS SHEET
H	06.05.15		UPDATED TO 2014 FBC
I	01.13.16		NO CHANGE THIS SHEET
J	03.08.16		REV. PER RER COMMENTS

date: 07-14-08
scale: 3/8" = 1"
dr. by: HAMID
chk. by:

drawing no. W08-66

ITEM #	PART #	QUANTITY	DESCRIPTION	MATERIAL	MANF./SUPPLIER/REMARKS
E1	ES9012	1	DOOR HEADER	6063-T6	–
E2	ES9014	1	STANDARD THRESHOLD	6063-T6	–
E2A	ES9015	1	SADDLE THRESHOLD	6063-T6	–
E2B	ES-9026	1	HIGH THRESHOLD	6063-T6	–
E2C	ES-9027	1	THRESHOLD COVER	6063-T5	–
E3H	ES9013	2	DOOR JAMB – HINGE	6063-T6	–
E4	ES9001	2	TOP RAIL	6063-T5	–
E5	ES9002	2	STD. BOTTOM RAIL	6063-T6	–
E5A	ES-9000-031	2	HI-PROFILE BOTTOM RAIL	6063-T6	–
E6H	ES9003	2	HINGE/LOCK STILE	6063-T5	–
E7	ES9006	1	MEETING STILE – INACTIVE LEAF	6063-T5	–
E8	ES9007	1	MEETING STILE – ACTIVE LEAF	6063-T5	–
E9H	ES9004	4	HORIZONTAL GLASS STOP	6063-T5	–
E9V	ES9004	4	VERTICAL GLASS STOP	6063-T5	–
E9.1	ES-9029	4	GLASS STOP (INSUL. LAM. GLASS)	6063-T5	–
E10T	ES9008	4	CORNER BLOCK –TOP	6063-T5	–
E10B	ES9008	4	CORNER BLOCK – BOTTOM	6063-T5	–
E11T	ES9009	4	CORNER PLATE – TOP	6063-T5	–
E11B	ES9009	4	CORNER PLATE – BOTTOM	6063-T5	–
E12	ES9010	4	SUPPORT ANGLE	6063-T5	3/4" X 1" X 1/8" X 9" LONG
E13	ES9011	AS RQD.	HINGE BACKUP PLATE REINFORCEMENT	6063-T5	–
E14	ES9020	1	LOCK BACKUP PLATE REINFORCEMENT	6063-T5	–
E15	ES9016	AS RQD.	JAMB FILLER	6063-T6	–
E16	ES9017	AS RQD.	REINFORCEMENT	6063-T6	–
E17	ES9021	1/ CLOSER	CLOSER SUPPORT CLIPS (PAIR)	6063-T5	–
E18	ES9022	1	CLOSER DOOR STOP	6063-T5	–
E19	ES9023	1/ CLOSER	CLOSER COVER PLATE	6063-T5	–
E20	ES9005		DOOR SWEEP	–	–
E21	ES9051		DOOR STOP	–	–
E22	ES9052		DOOR STOP COVER	–	–
M1		28	#12 x 1" P.H. ST/ST SMS	–	–
M2		AS RQD.	#12 – 24 x 1/2" F.H. ST/ST MS	–	–
M3		18	#8 – 32 x 1/2" P.H. ST/ST MS	–	–
M4		16	3/8" – 16 x 1" HEX. BOLT	–	–
M5	ES9000-G01	AS RQD.	WEDGE GASKET	EPDM	DUROMETER 70
M6	ES9000-G02	AS RQD.	SPACER GASKET	EPDM	DUROMETER 70
M7	ES9000-G03	AS RQD.	BULB VINYL, BASE-POLYPROPILENE, BULB-TPE	–	ULTRAFAB, DUROMETER 73
M8	ES9000-B1	AS REQD.	SETTING BLOCKS AT 1/4 POINTS	EPDM	DUROMETER 80±5 SHORE A
M9		AS RQD.	HINGE 4 1/2" x 4"	–	–
M9A		AS RQD.	OFFSET PIVOT HINGE	ALUMINUM	–
M12		1	3 POINT LOCK	–	–
M13		1	KEY CYLINDER	–	–
M14		1	THUMBTURN	–	–
M15		1	2 POINT LOCK	–	–
M16		1/ LEAF	DOOR CLOSURE	–	–
M17		2	PUSH – PULL	–	–
M19	W13273NK	AS RQD.	PILE – HEADER	–	–
M20	W23451NK	AS RQD.	PILE – MTG STILES	–	–
M22	–	1/ CLOSER	CHANNEL SPACER 5/8" X 1-3/4"	–	–
M23		2	THRESHOLD CLIP	–	–
M24		AS RQD.	STRUCTURAL SILICONE	–	–
M25		AS RQD.	SILICONE	–	–
M26		2/ CLOSER	1/4 – 20 x 2" HEX. BOLT	–	–
M27		3/ CLOSER	#10 x 1" P.H. ST/ST SMS	–	–
M28		6/ CLOSER	#10 x 3/4" F.H. ST/ST SMS	–	–
M29		3/ CLOSER	#10 x 1" F.H. ST/ST SMS	–	–
M30		AS RQD.	#8 x 1 1/2" F.H. ST/ST SMS	–	–
M31	W13351NK	AS RQD.	PILE – DOOR SWEEP	–	–
M32	W13275NK	AS RQD.	PILE – HEADER	–	–

ITEM #	PART #	QUANTITY	DESCRIPTION	MATERIAL	MANF./SUPPLIER/REMARKS
T1	ES9506		TRANSOM HEADER Series 9500	6063-T6	–
T2	ES9019		TRANSOM ADAPTER	6063-T5	–
T3	ES9018		TRANSOM GLASS STOP	6063-T5	–
T4	ES9502		HEAD COVER	6063-T5	–
MT1			#10 x 1/2" F.H. ST/ST SMS	–	–
MT2			TRIM GASKET	SILICONE	–
MT3			INTERIOR SPACER 1/4" x 1/4"	FOAM	–
MT4		AS REQD.	SETTING BLOCKS (1/16" x 3/4") AT 1/4 POINTS	EPDM	DUROMETER 80±5 SHORE A
T5	ES8005	AS REQD.	TRANSOM HEAD S-8000	6005-T6	–
T6	ES8013	AS REQD.	HORIZONTAL AT DOOR S-8000	6005-T6	–
T7	ES8012	AS REQD.	TRANSOM JAMB S-8000	6005-T6	–
T8	ES8003	AS REQD.	JAMB FILLER S-8000	6005-T5	–
T9	ES8006	AS REQD.	TRANSOM GLASS STOP S-8000	6063-T5	–
T10	ES8014	AS REQD.	TRANSOM GLAZING ADAPTER	6063-T6	–

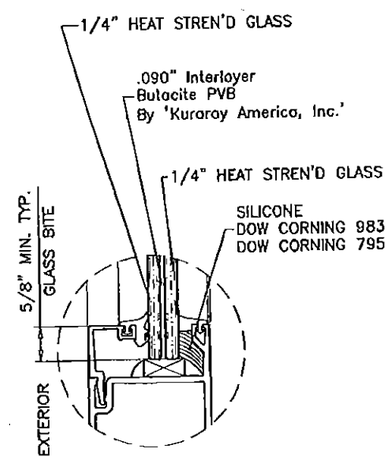

GLASS TYPE 'A'
9/16" OVERALL

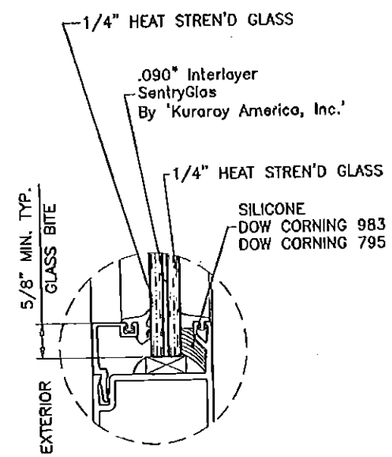

GLASS TYPE 'B'
9/16" OVERALL

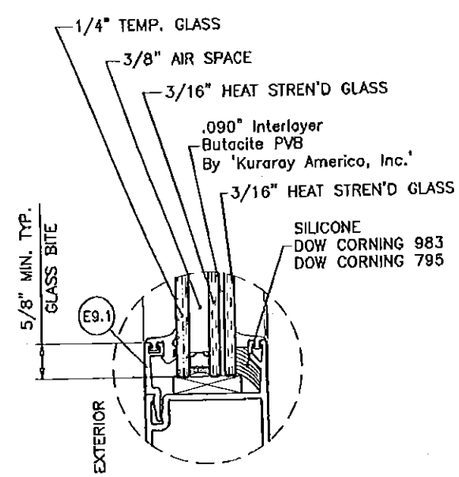

GLASS TYPE 'C'
1-1/8" OVERALL

3/8" AIR SPACE CONSISTING OF:
SPACER:
'HELIMA' LOW PROFILE ALUMINUM SPACER
BY 'LINGERMANN GMBH'
AROUND THE PERIMETER OF THE GLASS.
PERIMETER SEALANT:
SILICONE
DOW CORNING 791
GE 2000

GLAZING OPTIONS

PRODUCT REVISED
as complying with the Florida Building Code
NOA-No. 15-0602.09
Expiration Date 12/24/2018
By
Miami-Dade Product Control

JAVAD AHMAD
LICENSE
No. 70592
STATE OF FLORIDA
PROFESSIONAL ENGINEER

AL-FAROOQ CORPORATION
ENGINEERS & PRODUCT DEVELOPMENT
9360 SUNSET DRIVE, SUITE 220
MIAMI, FLORIDA 33173 (C.A.N. 3538)
TEL (305) 264-8100 FAX. (305) 262-6978

COMP-ANL\W08-66ESW

SERIES-9000 ALUM OUTSWING FRENCH DOOR (L.M.I.)

E.S. WINDOWS, LLC
3550 N.W. 49 STREET
MIAMI, FL. 33142
TEL (305) 638-5151 FAX. (305) 638-5158

revisions:

no.	date	by	description
G	02.24.12		SILICONE REV.
H	05.05.15		UPDATED TO 2014 FBC
I	01.13.16		REV. PER RER COMMENTS
J	03.08.16		REV. PER RER COMMENTS

date: 07-14-08
scale: 3/8" = 1"
dr. by: HAMID
chk. by:

drawing no.
W08-66

sheet 8 of 11

LOCKS: (See Table #1 or #3 for Load Capacities)

OPTION #1:

CONCEALED VERTICAL ROD PANIC EXIT DEVICE BY
'JACKSON PANIC SYSTEM' #1285 LOCATED AT 41"
FROM SILL AT EACH LEAF.
FASTENED WITH
(1) #14 X 1" HH SELF DRILLING SCREW AT ONE END AND
(2) #12-24 X 1/2" OH MACHINE SCREWS AT OTHER END

OR

CONCEALED VERTICAL ROD PANIC EXIT DEVICE BY
'ADAMS RITE' LOCATED AT 40" FROM SILL
AT EACH LEAF.
FASTENED WITH
(2) #10-32 X 3/4" FH MACHINE SCREWS AT ONE END AND
(2) #10-24 X 1/2" FH MACHINE SCREWS AT OTHER END

OPTION #2:

CONCEALED VERTICAL ROD PANIC EXIT DEVICE BY
'JACKSON PANIC SYSTEM' #2086 LOCATED AT 41"
FROM SILL AT EACH LEAF.
FASTENED WITH
(1) #14 X 1" HH SELF DRILLING SCREW AT ONE END AND
(2) #12-24 X 1/2" OH MACHINE SCREWS AT OTHER END

OR

CONCEALED VERTICAL ROD PANIC EXIT DEVICE BY
'DOR-O-MATIC' LOCATED AT 40" FROM SILL
AT EACH LEAF.
FASTENED WITH
(2) #12-24 X 1/2" FH MACHINE SCREWS AT ONE END

OPTION #3:

ACTIVE LEAF:

KEY OPERATED THREE POINT LOCK SYSTEM BY
'ADAMS RITE' WITH CONCEALED FLUSH BOLTS AT TOP &
BOTTOM OF LOCK STILE AND A THUMB TURN ON THE
INTERIOR, LOCATED AT 40" FROM BOTTOM OF PANEL
FASTENED WITH
(2) #12-24 X 1/2" FH MACHINE SCREWS

INACTIVE LEAF:

MANUALLY OPERATED TWO POINT LOCK SYSTEM BY
'ADAMS RITE' WITH CONCEALED FLUSH BOLTS AT TOP &
BOTTOM OF LOCK STILE AND A THUMB TURN ON THE
INTERIOR, LOCATED AT 40" FROM BOTTOM OF PANEL
FASTENED WITH
(2) #8-32 X 1/4" PH MACHINE SCREWS

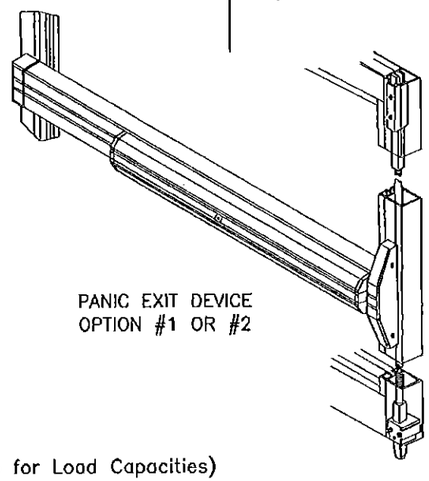

PANIC EXIT DEVICE
OPTION #1 OR #2

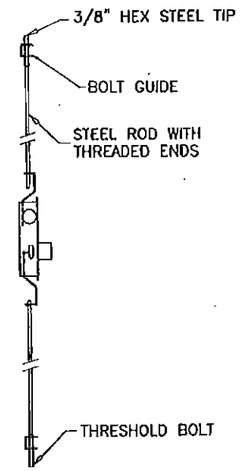

HINGES: (See Table #1 or #3 for Load Capacities)

OPTION #1:

OFFSET PIVOT HINGES
ALUMINUM AT TOP AND BOTTOM
FASTENED TO FRAME AND THRESHOLD WITH
#10-24 X 1/2" FH THREAD CUTTING SCREWS
(2) AT THRESHOLD, (2) AT JAMB BOTTOM
(3) AT FRAME HEAD
HEAVY DUTY BRASS OR BRONZE AT MIDSPAN
FASTENED TO FRAME AND LEAF WITH
(4) 1/4-20 X 5/8" MS

OPTION #2:

4 X 4-1/2" ST. STEEL BALL BEARING BUTT HINGES
LOCATED AT
11" FROM TOP & BOTTOM AND AT MIDSPAN
FASTENED TO DOOR FRAME AND LEAF STILE WITH
(4) #12-24 X 1/2" FH MACHINE SCREWS PER HASP

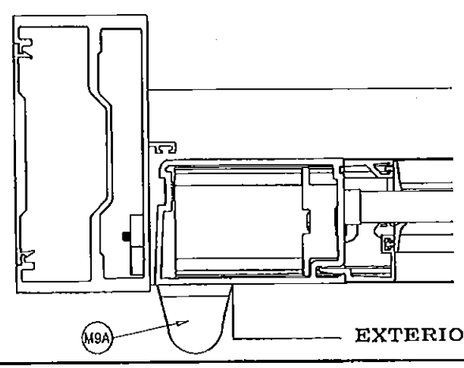

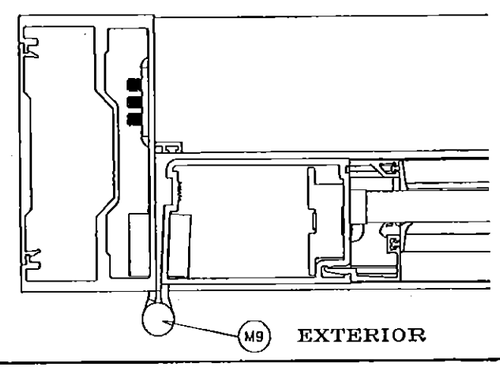

PRODUCT REVISED
as complying with the Florida Building Code
NOA-No. 15-0602.09
Expiration Date 12/24/2018
By
Miami-Dade Product Control

JAVAD AHMAD
LICENSE
No. 70592
STATE OF FLORIDA
PROFESSIONAL ENGINEER

AL-FAROOQ CORPORATION
ENGINEERS & PRODUCT DEVELOPMENT
9360 SUNSET DRIVE, SUITE 220
MIAMI, FLORIDA 33173 (C.A.N. 3538)
TEL. (305) 264-8100 FAX. (305) 262-6978

COMP-ANL\W08-66ESW

SERIES-9000 ALUM OUTSWING FRENCH DOOR (L.M.I.)

E.S. WINDOWS, LLC
3550 N.W. 49 STREET
MIAMI, FL. 33142
TEL. (305) 638-5151 FAX. (305) 638-5158

revisions:

no	date	by	description
G	02.24.12		NO CHANGE THIS SHEET
H	05.05.15		UPDATED TO 2014 FBC
I	01.13.16		NO CHANGE THIS SHEET
J	03.08.16		NO CHANGE THIS SHEET

date: 07-14-08
scale: 3/8" = 1"
dr. by: HAMID
chk. by:

drawing no.
W08-66

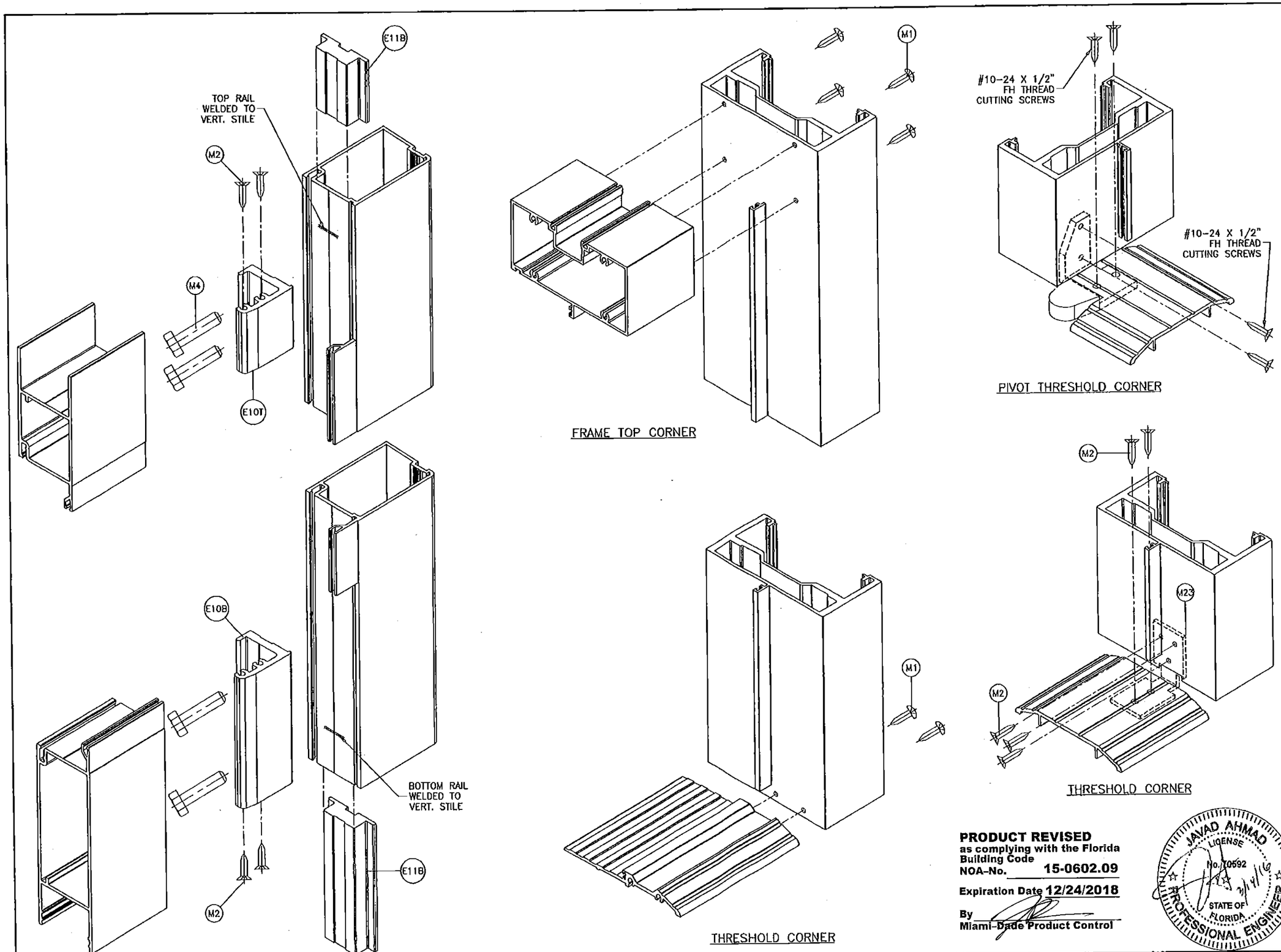

PRODUCT REVISED
as complying with the Florida Building Code
NOA-No. 15-0602.09
Expiration Date 12/24/2018
By
Miami-Dade Product Control

JAVAD AHMAD
LICENSE
No. 70592
STATE OF FLORIDA
PROFESSIONAL ENGINEER

AL-FAROOQ CORPORATION
ENGINEERS & PRODUCT DEVELOPMENT
9360 SUNSET DRIVE, SUITE 220
MIAMI, FLORIDA 33173 (C.A.N. 3538)
TEL. (305) 264-8100 FAX. (305) 262-6978
COMP-ANL\W08-66ESW

SERIES-9000 ALUM OUTSWING FRENCH DOOR (L.M.I.)

E.S. WINDOWS, LLC
3550 N.W. 49 STREET
MIAMI, FL. 33142
TEL. (305) 638-5151 FAX. (305) 638-5158

revisions:

no	date	by	description
G	02.24.12		NO CHANGE THIS SHEET
H	05.05.15		UPDATED TO 2014 FBC
I	01.13.16		NO CHANGE THIS SHEET
J	03.08.16		NO CHANGE THIS SHEET

date: 07-14-08
scale: 3/8" = 1"
dr. by: HAMID
chk. by:

drawing no.
W08-66

sheet 10 of 11

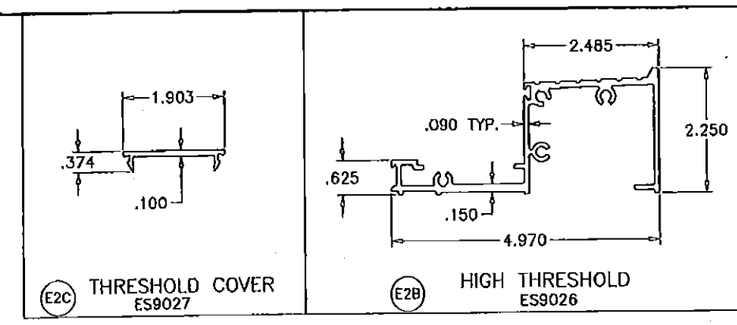

E2C THRESHOLD COVER
ES9027

E2B HIGH THRESHOLD
ES9026

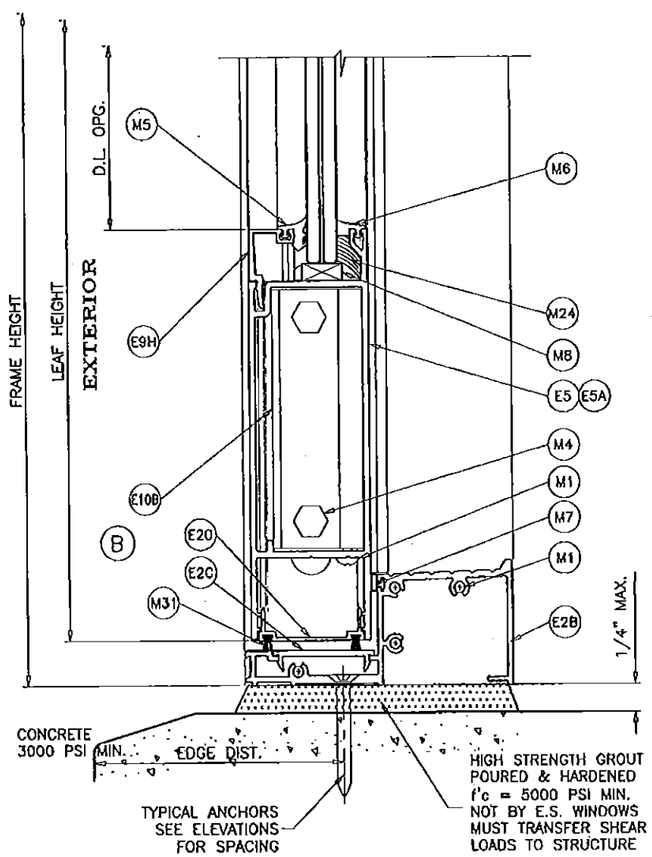

HIGH THRESHOLD OPTION

APPROVED FOR WATER RESISTANCE WHEN USED WITH SINGLE DOORS
NOT APPROVED FOR WATER RESISTANCE WHEN USED WITH DOUBLE DOORS

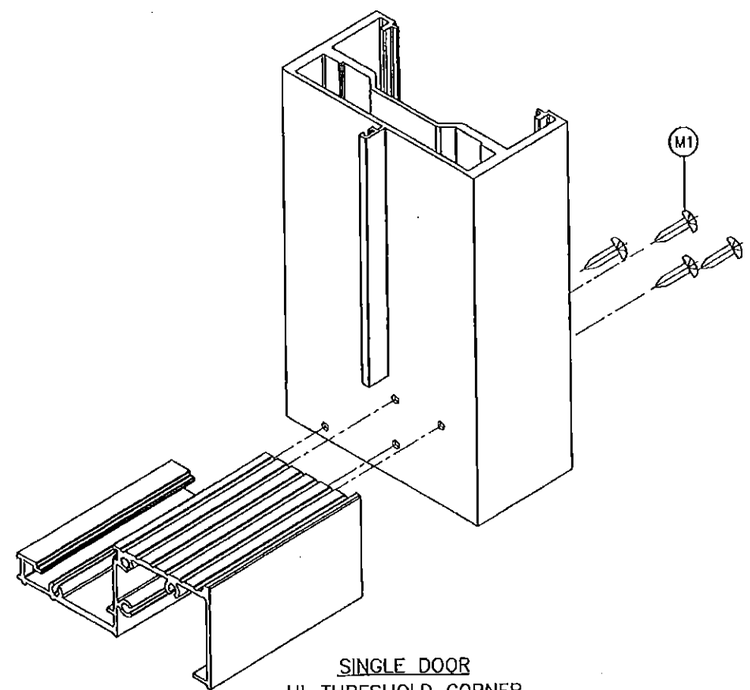

SINGLE DOOR
HI-THRESHOLD CORNER

PRODUCT REVISED
as complying with the Florida Building Code
NOA-No. 15-0602.09
Expiration Date 12/24/2018
By
Miami-Dade Product Control

JAVAD AHMAD
LICENSE
No. 70592
STATE OF FLORIDA
PROFESSIONAL ENGINEER
3/14/16

AL-FAROOQ CORPORATION
ENGINEERS & PRODUCT DEVELOPMENT
9360 SUNSET DRIVE, SUITE 220
MIAMI, FLORIDA 33173 (C.A.N. 3538)
TEL. (305) 264-8100 FAX. (305) 262-6978

COMP-ANL\W08-66ESW

SERIES-9000 ALUM OUTSWING FRENCH DOOR (L.M.I.)

E.S. WINDOWS, LLC
3550 N.W. 49 STREET
MIAMI, FL. 33142
TEL. (305) 638-5151 FAX. (305) 638-5158

revisions:

no	date	by	description
G	02.24.12		NO CHANGE THIS SHEET
H	05.05.15		UPDATED TO 2014 FBC
I	01.13.16		REV. PER RER COMMENTS
J	03.08.16		REV. PER RER COMMENTS

date: 07-14-08
scale: 3/8" = 1"
dr. by: HAMID
chk. by:

drawing no.
W08-66

sheet 11 of 11