MIAMI-DADE COUNTY
DEPARTMENT OF REGULATORY AND ECONOMIC RESOURCES (RER)
BOARD AND CODE ADMINISTRATION DIVISION

MIAMI-DADE COUNTY
PRODUCT CONTROL SECTION
11805 SW 26 Street, Room 208
T (786) 315-2590 F (786) 315-2599
www.miamidade.gov/economy

# NOTICE OF ACCEPTANCE (NOA)

**Enclos Corporation**
**2770 Blue Water Road**
**Eagan, MN 55121**

**SCOPE:**

This NOA is being issued under the applicable rules and regulations governing the use of construction materials. The documentation submitted has been reviewed and accepted by Miami-Dade County RER - Product Control Section to be used in Miami Dade County and other areas where allowed by the Authority Having Jurisdiction (AHJ).

This NOA shall not be valid after the expiration date stated below. The Miami–Dade County Product Control Section (In Miami–Dade County) and/or the AHJ (in areas other than Miami–Dade County) reserve the right to have this product or material tested for quality assurance purposes. If this product or material fails to perform in the accepted manner, the manufacturer will incur the expense of such testing and the AHJ may immediately revoke, modify, or suspend the use of such product or material within their jurisdiction. RER reserves the right to revoke this acceptance, if it is determined by Miami–Dade County Product Control Section that this product or material fails to meet the requirements of the applicable building code.

This product is approved as described herein, and has been designed to comply with the Florida Building Code, including the High Velocity Hurricane Zone.-

**DESCRIPTION: Series "7030 SGP CW Structurally Glazed" Aluminum Curtain Wall System – S.M.I.**

**APPROVAL DOCUMENT:** Drawing No. **7030TSSMI**, titled "7030 Series Curtain Wall – Twin Span - Small Missile Impact", sheets 1 through 31 of 31, dated 4/17/14, prepared by manufacturer, signed and sealed by William D. Cook, P.E., bearing the Miami-Dade County Product Control Revision stamp with the Notice of Acceptance number and expiration date by the Miami-Dade County Product Control Section.

**MISSILE IMPACT RATING: Small Missile Impact Resistant**

**LABELING:** Each unit shall bear a permanent label with the manufacturer's name or logo, **Chester, VA,** model/series, and following statement: "Miami-Dade County Product Control Approved", unless otherwise noted herein.

**RENEWAL** of this NOA shall be considered after a renewal application has been filed and there has been no change in the applicable building code negatively affecting the performance of this product.

**TERMINATION** of this NOA will occur after the expiration date or if there has been a revision or change in the materials, use, and/or manufacture of the product or process. Misuse of this NOA as an endorsement of any product, for sales, advertising or any other purposes shall automatically terminate this NOA. Failure to comply with any section of this NOA shall be cause for termination and removal of NOA.

**ADVERTISEMENT:** The NOA number preceded by the words Miami-Dade County, Florida, and followed by the expiration date may be displayed in advertising literature. If any portion of the NOA is displayed, then it shall be done in its entirety.

**INSPECTION:** A copy of this entire NOA shall be provided to the user by the manufacturer or its distributors and shall be available for inspection at the job site at the request of the Building Official.

This NOA **revises NOA# 14-0527.01** and consists of this page 1 and evidence pages E-1 and E-2, as well as approval document mentioned above.

The submitted documentation was reviewed by **Manuel Perez, P.E.**

MIAMI-DADE COUNTY APPROVED

2/4/16

**NOA No. 15-0603.19**
**Expiration Date: June 03, 2019**
**Approval Date: February 11, 2016**

**Enclos Corporation**

## NOTICE OF ACCEPTANCE: EVIDENCE SUBMITTED

**A. DRAWINGS**

1. Manufacturer's die drawings and sections.
   ***(Submitted under NOA No. 08-0915.13)***
2. Drawing No **7030TSSMI**, Sheets 1 through 31 of 31, titled "7030 Series Curtain Wall - Twin Span - Small Missile Impact", dated 4/17/14, prepared by manufacturer, signed and sealed by William D. Cook, P.E.

**B. TESTS**

1. Test reports on: 1) Air Infiltration Test, per FBC, TAS 202-94
   2) Uniform Static Air Pressure Test, Loading per FBC TAS 202-94
   3) Water Resistance Test, per FBC, TAS 202-94
   4) Small Missile Impact Test per FBC, TAS 201-94
   5) Cyclic Wind Pressure Loading per FBC, TAS 203-94

   along with marked-up drawings and installation diagram of an aluminum curtain wall system, prepared by Construction Research Laboratory, Inc., Test Report No. **CRL-7261**, **mock-up #1**, dated 9/11/08 to 10/08/08, signed and sealed by Richard Sembello, P.E.
   ***(For reference only - submitted under OTA#09-1336, for MET 2 Project)***
2. Test reports on: 1) Uniform Static Air Pressure Test, Loading per FBC TAS 202-94
   2) Small Missile Impact Test per FBC, TAS 201-94
   3) Cyclic Wind Pressure Loading per FBC, TAS 203-94

   along with marked-up drawings and installation diagram of an aluminum curtain wall system, prepared by Construction Research Laboratory, Inc., Test Report No. **CRL-7264**, **mock-up #2**, dated 9/08 to 12/08, signed and sealed by Richard Sembello, P.E.
   ***(For reference only - submitted under OTA#09-1336, for MET 2 Project)***
3. Test reports on: 1) Uniform Static Air Pressure Test, Loading per FBC TAS 202-94
   2) Large Missile Impact Test per FBC, TAS 201-9
   3) Cyclic Wind Pressure Loading per FBC, TAS 203-94

   along with marked-up drawings and installation diagram of an aluminum curtain wall system, prepared by Construction Research Laboratory, Inc., Test Report No. **CRL-7265**, **mock-up #3**, dated 9/4/08, signed and sealed by Richard Sembello, P.E.
   ***(For reference only - submitted under OTA#08-1789, for MET 2 Project)***

Manuel Perez

**Manuel Perez, P.E.**
**Product Control Examiner**
**NOA No. 15-0603.19**
**Expiration Date: June 03, 2019**
**Approval Date: February 11, 2016**

**B. TESTS** (CONTINUED)

**4.** Test reports on: 1) Air Infiltration Test, per FBC, TAS 202-94
2) Uniform Static Air Pressure Test, Loading per FBC TAS 202-94
3) Water Resistance Test, per FBC, TAS 202-94
4) Small Missile Impact Test per FBC, TAS 201-94
5) Large Missile Impact Test per FBC, TAS 201-9
6) Cyclic Wind Pressure Loading per FBC, TAS 203-94
along with marked-up drawings and installation diagram of aluminum curtain wall system prepared by Hurricane Testing Lab., Test Report No. **HTL-0434-0616.06**, specimens A, B, C, G, 3, 4, 5, 14, 15, 16 and 17, dated 6/13/07, signed and sealed by Vinu J. Abraham, P.E. ***(Submitted under NOA# 08-0915.13)***

## C. CALCULATIONS

**1.** Revised Anchor Calculations, and Structural Analysis, complying with FBC 2007, dated 08/24/08 and 08/16/10, prepared by Bromley-Cook Engineering, signed and sealed by William D. Cook, P.E. ***(Submitted under NOA# 10-0525.09)***

**2.** Glazing complies with **ASTM E1300-04.**

**D. QUALITY ASSURANCE**

**1.** Miami-Dade Department of Regulatory and Economic Resources (RER).

**E MATERIAL CERTIFICATIONS**

**1.** Notice of Acceptance No. **14-0423.17** issued to **Eastman Chemical Company (MA)** for their "**Saflex Clear and Color Glass Interlayers**" dated 06/19/14, expiring on 05/21/16.

**D. STATEMENTS**

**1.** Statement letter of conformance, complying with **FBC 5th Edition (2014)**, dated April 17, 2014, issued by Bromley – Cook Engineering, Inc., signed and sealed by William D. Cook, P.E.

**2.** Statement letter of no financial interest, dated August 25, 2008, signed and sealed by William D. Cook, P.E. ***(Submitted under NOA# 08-0915.13)***

**G. OTHER**

**1.** Notice of Acceptance No. **14-0527.01**, issued to Enclos Corporation for their Series "7030 SGP CW Structurally Glazed" Aluminum Curtain Wall System – S.M.I., approved on 08/14/14 and expiring on 06/03/19.

**Manuel Perez, P.E.**
**Product Control Examiner**
**NOA No. 15-0603.19**
**Expiration Date: June 03, 2019**
**Approval Date: February 11, 2016**

# ENCLOS CORP. FLORIDA HURRICANE SYSTEMS
# 7030 SERIES TWIN SPAN CURTAIN WALL
# 4-SIDED STRUCTURALLY GLAZED WITH AND WITHOUT FACE CAPS
# SMALL MISSILE IMPACT RESISTANT

## GLASS TYPES - HEAT STRENGTHENED

### MONOLITHIC / LAMINATED

◇ I
- 1/4" CLEAR HEAT STRENGTHENED
- .060" SAFLEX PVB INTERLAYER BY EASTMAN CHEMICAL
- 1/4" CLEAR HEAT STRENGTHENED

◇ M
- 1/4" CLEAR HEAT STRENGTHENED
- .060" SAFLEX PVB INTERLAYER BY EASTMAN CHEMICAL
- 1/4" CLEAR HEAT STRENGTHENED W/FRIT

### INSULATED / LAMINATED

◇ J
- INNER LITE- 1/4" CLEAR HEAT STRENGTHENED
- .060" SAFLEX PVB INTERLAYER BY EASTMAN CHEMICAL
- 1/4" CLEAR HEAT STRENGTHENED
- 1/2" CLEAR AIR SPACE
- OUTER LITE- 1/4" CLEAR TEMPERED

## GLASS TYPES - TEMPERED

### MONOLITHIC / LAMINATED

◇ It
- 1/4" CLEAR TEMPERED
- .060" SAFLEX PVB INTERLAYER BY EASTMAN CHEMICAL
- 1/4" CLEAR TEMPERED

### INSULATED / LAMINATED

◇ Jt
- INNER LITE- 1/4" CLEAR TEMPERED
- .060" SAFLEX PVB INTERLAYER BY EASTMAN CHEMICAL
- 1/4" CLEAR TEMPERED
- 1/2" CLEAR AIR SPACE
- OUTER LITE- 1/4" CLEAR TEMPERED

## GASKET/SETTING BLOCK LIST

| | | | | | | | |
|---|---|---|---|---|---|---|---|
| | PART #PG-1 | 70 DURO SILICONE | PRESET GASKET | | PART # GSB-1 | 85 DURO EPDM | SETTING BLOCK FOR 1-3/8" GLASS |
| | PART #HA-132 | 70 DURO EPDM | MULLION SEAL GASKET | | PART # GSB-2 | 85 DURO EPDM | SETTING BLOCK FOR INTERMEDIATE HORIZ. 1-3/8" GLASS |
| | PART #WG-1 | 70 DURO EPDM | WEDGE GASKET | | PART # GSB-3 | 85 DURO EPDM | SETTING BLOCK FOR 9/16" GLASS |
| | PART #BG-1 | 70 DURO EPDM | ROLL-ON BULB GASKET | | PART # GSB-4 | 85 DURO EPDM | SETTING BLOCK FOR INTERMEDIATE HORIZ. 9/16" GLASS |
| | PART #HA-114 | 70 DURO SILICONE | AIR SEAL BULB GASKET | | | | |
| N.T.S. | PART #HA-220 | 70 DURO EPDM | MULLION SEAL GASKET | | PART #HS-108 | RIGID PVC | VERTICAL BLADE ISOLATOR |
| | | | | | PART #HS-112 | RIGID PVC | VERTICAL BLADE ISOLATOR |
| | PART #FG-1 | 70 DURO SILICONE | RAINSCREEN FLIPPER GASKET | | PART # HS-104 | | |
| | PART #HA-108 | 70 DURO SILICONE | AIR SEAL BULB GASKET | | PART # 41184 | SCP | 9/16" GLASS BUTT JOINT FILLER |
| | PART #HA-103 | 70 DURO SILICONE | AIR SEAL BULB GASKET | | PART # 41185 | SCP | 1 3/8" BUTT JOINT FILLER |

chris davy
08/18/2015

## DRAWING INDEX


| SHEET | DESCRIPTION |
|---|---|
| 1/31 | COVER SHEET |
| 2/31 | MATERIALS/PARTS LEGEND |
| 3/31 | ELEVATIONS - WITH FACE COVERS |
| 4/31 | ELEVATIONS - WITHOUT FACE COVERS |
| 5/31 | GLASS SIZE CHARTS - MONOLITHIC W/ COVERS |
| 6/31 | GLASS SIZE CHARTS - MONOLITHIC W/O COVERS |
| 7/31 | GLASS SIZE CHARTS - INSULATED W/ COVERS |
| 8/31 | GLASS SIZE CHARTS - INSULATED W/O COVERS |
| 9/31 | MULLION SPAN CHARTS |
| 10/31 | DETAILS - FRAME SILLS & INT. HORIZONTALS |
| 11/31 | DETAILS - FRAME HEADS |
| 12/31 | DETAILS - FRAME HEADS |
| 13/31 | DETAILS - STACK RAIL |
| 14/31 | DETAILS - STACK RAIL |
| 15/31 | DETAILS - INTERMEDIATE ANCHOR |
| 16/31 | DETAILS - FRAME JAMBS AT HEAD RAIL |
| 17/31 | DETAILS - FRAME JAMBS |
| 18/31 | DETAILS - CORNER MULLIONAT STACK & HEAD RAIL |
| 19/31 | DETAILS - CORNER MULLION AT INT. ANCHOR |
| 20/31 | DETAILS - CORNER MULLION & TYPICAL MULLION |
| 21/31 | DETAILS - TYPICAL MULLION AT STACK JOINT |
| 22/31 | DETAILS - TYPICAL MULLION AT INT. ANCHOR |
| 23/31 | DETAILS - FRAME JAMB AT INT. ANCHOR |
| 24/31 | DETAILS - FRAME JAMBS AT END DAMS |
| 25/31 | DETAILS - TYPICAL MULLION AT HEAD RAIL |
| 26/31 | ANCHOR OPTIONS CHART - HEAD & SILL |
| 27/31 | ANCHOR OPTIONS CHART - MID SPAN |
| 28/31 | EXTRUSIONS |
| 29/31 | EXTRUSIONS |
| 30/31 | EXTRUSIONS |
| 31/31 | FRAME ASSEMBLY DETAILS |


## ABBREVIATIONS

R.O. = ROUGH OPENING
O.A.F. = OVERALL FRAME
D.L.O. = DAYLITE OPENING
GL. GLASS
L.M.I. = LARGE MISSILE IMPACT
S.M.I. = SMALL MISSILE IMPACT
OPP. = OPPOSITE
MAX. = MAXIMUM
MIN. = MINIMUM
CONC. = CONCRETE


FOR CAPTURED SYSTEM ELEVATIONS, SEE PAGE 3
FOR STRUCTURALLY GLAZED ELEVATIONS, SEE PAGE 4


## GENERAL NOTES

1. ALUMINUM CURTAIN WALL SYSTEM IS TESTED FOR SMALL MISSILE IMPACT. SHUTTERS REQUIRED FROM GRADE TO 30' ABOVE GRADE. NO SHUTTERS REQ'D ABOVE 30'.
2. FLORIDA BUILDING CODE REQUIREMENTS (HVHZ) REQUIREMENTS: TAS-201 - SMALL MISSILE IMPACT; TAS-202 - AIR LEAKAGE, WATER PENETRATION & STRUCTURAL PERFORMANCE (WATER @ 20 psf.); TAS-203 - CYCLING
3. THIS SYSTEM MAY BE USED IN CONJUNCTION WITH APPROVED ENTRANCE DOORS.
4. CODE REQUIREMENTS FOR SAFEGUARDS MUST BE OBSERVED.
5. THIS PRODUCT IS DESIGNED TO COMPLY WITH THE HIGH VELOCITY HURRICANE ZONE OF THE FLORIDA BUILDING CODE 5th EDITION (2014)
6. WOOD BUCKS BY OTHERS MUST BE ANCHORED PROPERLY TO TRANSFER LOADS TO THE STRUCTURE. BUCKS SHALL BE DESIGNED BY PROFESSIONAL ENGINEER OF RECORD.
7. OPENINGS SHALL BE CONSTRUCTED IN AN ACCEPTABLE MANNER BY WHICH INSTALLED ALUMINUM FRAMES CAN BE PROPERLY ANCHORED TO THE STRUCTURE ACCORDING TO DETAILS AND CHARTS ON THESE DESIGN DRAWINGS.
8. ANCHORS SHALL BE AS LISTED IN CHARTS AND SPACED AS SPECIFIED ON THESE DESIGN DRAWINGS.
9. ANCHOR EMBEDMENT TO BASE MATERIAL SHALL BE AS SPECIFIED ON THESE DESIGN DRAWINGS (BEYOND WALL DRESSING OR STUCCO)
10. ALL STEEL IN CONTACT WITH ALUMINUM TO BE PAINTED OR COATED. COATING SHALL BE BITUMINOUS OR ASPHALTIC OR SIMILAR.
11. 33% INCREASE IN ALLOWABLE STRESS WAS NOT USED IN THE DESIGN OF THE FRAMING SYSTEM AND ANCHORS.

FOR MIAMI-DADE CO. B.C.C.O.

PRODUCT REVISED
as complying with the Florida Building Code
Acceptance No 15-0603.19
Expiration Date June 3, 2019
By Manuel Perez
Miami Dade Product Control


enclos corp
2770 Blue Water Road
Eagan, MN 55121-1400
Tel. 651-796-6100 • Fax 651-994-6360
Engineering Locations
Eagan, MN • Montreal, QC, CA • Moncton, NB, CA
St. Louis, MO • Manila, PH


REVISIONS

WILLIAM D. COOK LICENSE No 43904 STATE OF FLORIDA PROFESSIONAL ENGINEER
MAY 3 1 2016
Reviewed For Structural Integrity Only


BROMLEY - COOK ENGINEERING
STRUCTURAL ENGINEERING SERVICES
5440 N.W. 33RD AVENUE SUITE 101
FORT LAUDERDALE, FLORIDA 33309
TEL: (954) 772-4624 FAX: (954) 772-4629
CERT. OF AUTH. #00009124
WILLIAM D. COOK P.E.
FLA P.E. # 43904
FLA S.I. # 2006


| Date | Scale |
|---|---|
| 4/17/14 | |

Drawing No.
7030TSSMI

Drawing Title
7030 SERIES CURTAIN WALL
TWIN SPAN
SMALL MISSILE IMPACT

Sheet No.
1/31

# BILL OF MATERIALS

1. N/A
2. N/A
3. A36 STEEL BAR 1/4" x 5" (PAINTED FOR PROTECTION)
4. N/A
5. A36 STEEL BAR 5/8" x 5" (PAINTED FOR PROTECTION)
6. N/A
7. N/A
8. N/A
9. A36 STEEL TUBE 2" x 2" x 1/4"
10. ANTI-BUCKLING CLIPS 4" LONG, @ 6" FROM TOP & BOTTOM AND 24" O.C. MAX (6063-T6 ALUM.)
11. 1/4-20 x 3/4" GRADE 5 ZINC PLATED HWH TAPTITE SCREWS (@ HORIZONTAL RAILS U.N.O.)
12. 1/4-20 x 3/4" GRADE 5 ZINC FH PLATED TAPTITE SCREWS (2) PER HORIZONTAL RAIL
13. #14 x 1 1/2" HWH SMS TYPE A @ HORIZONTAL RAILS (LOCATION VARIES)
14. #14 x 1 1/2" HWH SMS TYPE A @ HORIZONTAL RAILS
15. #14 x 1 1/2" FL HD SMS TYPE A @ HORIZONTAL RAILS
16. 1/4-20 x 3/4" GRADE 5 ZINC PLATED FH TAPTITE SCREWS
17. 1/4-20 x 1" GRADE 5 ZINC PLATED HWH TAPTITE SCREWS
18. #10-16 x 3/4" HWH DRIL-FLEX
19. #10 x 1 1/4" FH SMS
20. 3/8-16 x 1 1/2" FH GRADE 5 BOLTS, TACK WELDED TO STEEL BAR W/WASHERS & LOCKNUTS @ 36" O.C.
21. #14 x 1" FH SMS, (2) PER ANCHOR, SEAL HEADS
22. 1/4-20 x 3/4" HWH DRIL-FLEX
23. #10 x 3/4" FH SMS
24. 3/8-16 x 1" GRADE 5 ZINC PLATED HWH TAPTITE SCREWS
25. 1/4-20 x 1 1/4" GRADE 5 ZINC PLATED HWH TAPTITE SCREWS
26. SEALANT & BACKER ROD DOW CORNING 790, 791, 795 SILICONE
27. 3/8" DIA WEEP HOLES @ 1/4 PTS.
28. 3/8" DIA WEEP HOLES @ 1/3 PTS.
29. 3/16" DP. x 3/8" LONG NOTCH @ 1/3 PTS.
30. STRUCTURAL SEALANT DOW CORNING 983 OR 995
31. STRUCTURAL SEALANT DOW CORNING 983 OR 995
32. N/A
33. 6 1/2" x 4 1/4" x 1/4" EXTRUDED ALUM. ANGLE (# 41035) 6063-T6
34. 5" X 4 1/4" x 1/4" EXTRUDED ALUM. TEE (# 41036) 6063-T6
35. 1/4" x 1/2" NORTON TAPE (ADHESIVE TWO SIDES)
36. N/A
37. ACCESS HOLES AT FASTENERS
38. SHIMS AS REQUIRED (HIGH STRENGTH STRUCTURAL PLASTIC SHIM)
39. 1/4-20 x 1 1/2" GRADE 5 ZINC PLATED FH TAPTITE SCREWS
40. 3/8-16 x 1 1/2" GRADE 5 ZINC PLATED HWH TAPTITE SCREWS
41. 1/2-13 x 2" GRADE 5 ZINC PLATED HWH TAPTITE SCREWS
42. 1" X 5/8" X 1/8" ALUM. ANGLE (6063 T-6)
43. SILICONE BOOT, 3" LONG, ACROSS MULLION JOINTS
44. #10 x 5/8" LOW PROFILE FH SMS
45. #10-24 x 3/4" PFH MACHINE SCREW 300 SERIES S.S.
46. #10-24 x 1/2" PFH MACHINE SCREW 300 SERIES S.S.
47. SHOP STRUCTURAL SEAL & BACKER, MIN. OF 1" LG. AT TOP & BOTTOM AND AT APPROX. 24" O.C.
48. SHOP STRUCTURAL SEAL & BACKER, MIN. OF 1" LG. AT ENDS & AT MIDPOINT OF COVER
49. SHOP STRUCTURAL SEAL & BACKER, CONTINUOUS AT BOTTOM SIDE OF COVER
50. 3/8-16 x 2" GRADE 5 FH BOLTS, TACK WELDED TO STEEL BAR W/ WASHERS & LOCKNUTS @ 36" O.C.
51. #10 x 5/8" HWH SMS
52. 1/4-20 x 2" HWH SMS TYPE A
53. 3/16" x 1/2" LG. WEEP SLOTS @ 1/4 PTS.
54. 6" x 3 1/2" x 1/4" THK. A36 STEEL ANGLE
55. #14 x 3/4" FH SMS
56. 1/4-20 x 1" HWH DRILL-FLEX
57. 3/8" DIA WEEP CHECK VALVE
58. A36 STEEL BAR 5/8" x 5" (PAINTED FOR PROTECTION)
59. END DAM, 4"x 6"x .060" THK. FORMED ALUMINUM
60. 3/8-16 x 1" GRADE 5 HEX HD BOLT, WASHER, & LOCKNUT
61. 1/2-13 x 1 3/4" GRADE 5 HEX HD CAP SCREW, WASHERS, & LOCKNUT
62. 1/2-13 x 2" GRADE 5 HEX HD CAP SCREW, WASHERS, & LOCKNUT
63. 1/4-20 x 1/2" GRADE 5 ZINC PLATED FL HD TAPTITE SCREW
64. 2"x 2 1/2"x 1/8" FORMED ALUMINUM ANGLE
65. IN SPANDREL AREAS, 2 1/2" ABOVE AND BELOW HORIZONTAL RAILS & 36" O.C MAX.
66. N/A
67. 1/2-13 x 1" GRADE 5 ZINC PLATED HWH TAPTITE SCREWS
68. SEAL FASTENER HEADS
69. EXTRUDED ALUMINUM SNAP-IN POCKET CLOSURE
70. 1/2"ø HWH POWER BOLTS, (2) PER ANCHOR
71. EXTRUDED ALUMINUM SPLICE/LIFT LUG
72. 1 1/8" DIA x 1/4" THK ALUMINUM WASHER
73. 5/8"ø (M16) GR 8.8 HI-TENSILE TEE BOLT & NUT FOR HALFEN SERIES ANCHOR CHANNELS
74. 1/2"ø HWH POWER BOLTS (2) PER ANCHOR
75. 1/2-13 x 1 1/2" GRADE 5 ZINC PLATED HWH TAPTITE SCREWS
76. 3/8"ø HWH POWER BOLTS, (2) PER ANCHOR
77. 3/8"ø HWH POWERS CO. WEDGE BOLTS, (2) PER ANCHOR
78. 3/8"ø HWH POWERS CO. WEDGE BOLTS, (2) PER ANCHOR
79. 3/8-16 x 3" GRADE 5 ZINC PLATED HWH TAPTITE SCREWS
80. 1/4-20 x 1" GRADE 5 ZINC PLATED FH TAPTITE SCREWS
81. N/A
82. 5/8"ø (M14) GRADE 8.8 HI-TENSILE TEE BOLT FOR HALFEN 5030HTA SERIES ANCHOR CHANNELS
83. 1/4" THK x 2" SQ EXTRUDED ALUMINUM SERRATED WASHER
84. 1/4-20 x 1 1/2" HWH DRILL-FLEX
85. 1/2-13 x 5" GRADE 5 HEX HD BOLT, WASHERS, & LOCKNUT
86. 1/2-13 x 1 1/2" GRADE 5 HEX HD CAP SCREW, WASHERS, & LOCKNUT
87. 3/8"ø GRADE 5 HWH POWER BOLT
88. STEEL BAR 3/8" x 5 1/2" (PAINTED FOR PROTECTION)
89. 1/2-13 x 3" GRADE 5 HEX HD BOLT, WASHER, & LOCKNUT
90. 3/8-16 x 2" GRADE 5 ZINC PLATED HWH TAPTITE SCREW
91. 1/2"ø HWH POWERS CO. WEDGE BOLTS (2) PER ANCHOR
92. 1/2"ø HWH POWERS CO. WEDGE BOLTS (2) PER ANCHOR
93. N/A
94. HALFEN EMBED. MUST BE ENGINEERED FOR SUBSTRATE CONDITIONS.
95. N/A

FOR MIAMI-DADE CO. B.C.C.O.

PRODUCT REVISED
as complying with the Florida
Building Code
Acceptance No 15-0603.19
Expiration Date June 3, 2019
By Manuel Perez
Miami-Dade Product Control


enclos corp

2770 Blue Water Road
Eagan, MN 55121-1400
Tel. 651-796-6100 • Fax 651-994-6960

Engineering Locations
Eagan, MN • Montreal, QC, CA • Moncton, NB, CA
St. Louis, MO • Manila, PH


REVISIONS

WILLIAM D. COOK LICENSE SEAL No 43904 STATE OF FLORIDA PROFESSIONAL ENGINEER
MAR 3 1 2014
Reviewed For Structural Integrity Only


BROMLEY - COOK ENGINEERING, INC.
STRUCTURAL ENGINEERING SERVICES
5440 N.W. 33RD AVENUE SUITE 100
FORT LAUDERDALE, FLORIDA 33309
TEL: (954) 772-4624 FAX: (954) 772-4625
CERT. OF AUTH. #00009124
WILLIAM D. COOK P.E.
FLA P.E. # 43904
FLA S.I. # 2008


| Date | Scale |
|---|---|
| 4/17/14 | |

Drawing No.
7030TSSMI

Drawing Title
7030 SERIES CURTAIN WALL
TWIN SPAN
SMALL MISSILE IMPACT

Sheet No.
2/31

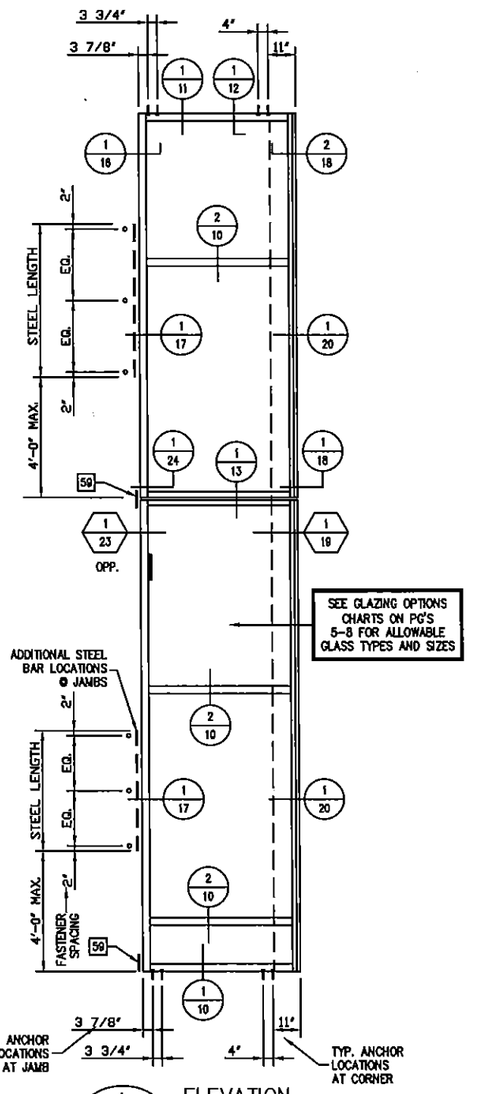


1/3 ELEVATION
CAPTURED (W/ FACE CAPS)

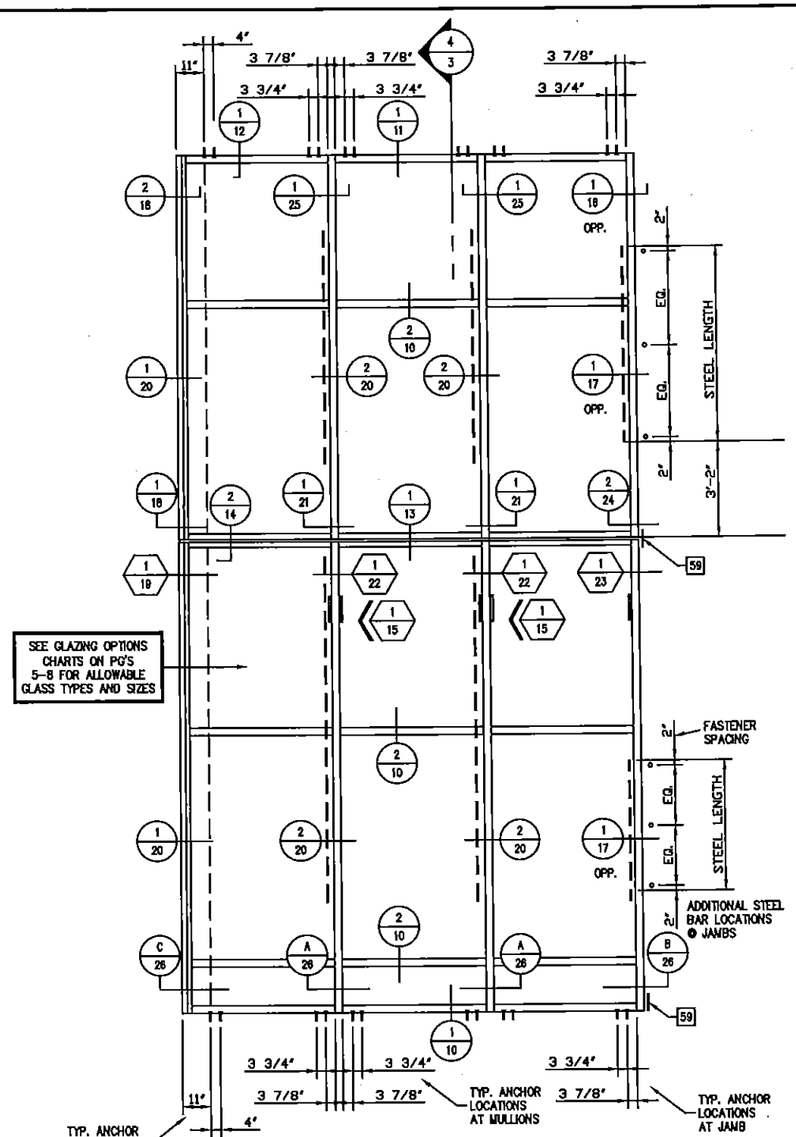


3/3 ELEVATION
CAPTURED (W/ FACE CAPS)

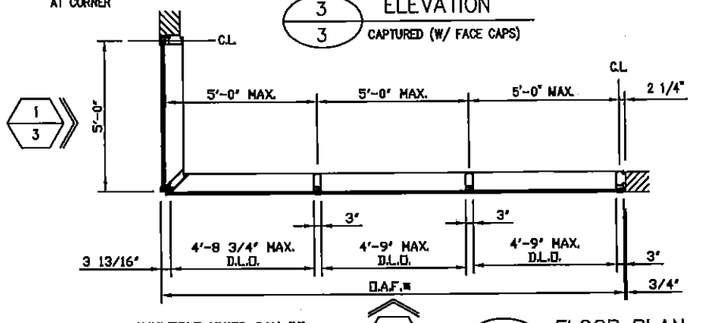


*MULTIPLE UNITS CAN BE INSTALLED SIDE BY SIDE FOR UNLIMITED OVERALL FRAME WIDTH

A/3 FLOOR PLAN

## CAPTURED SYSTEM (W/ FACE CAPS)

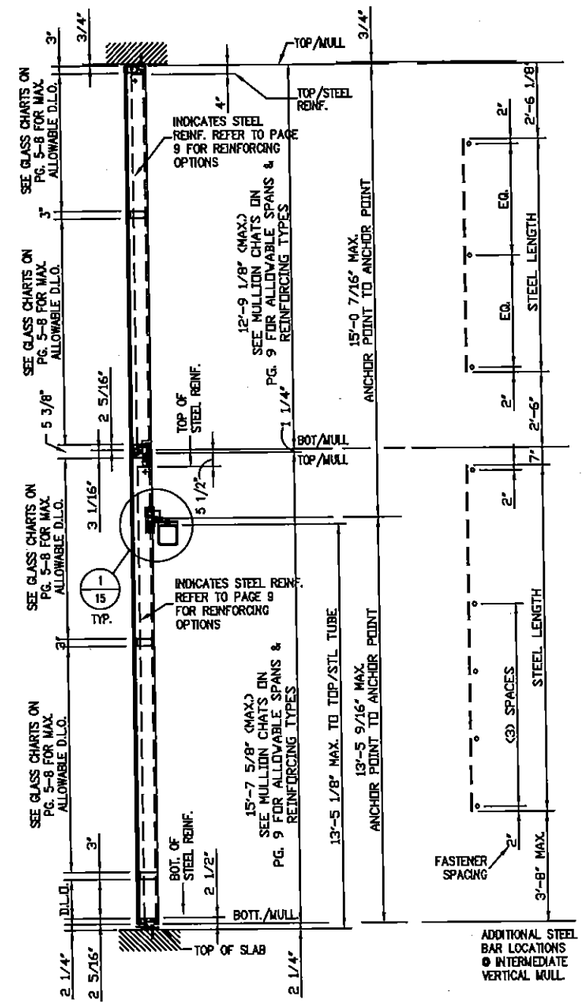


4/3 TYPICAL SECTION
CAPTURED (W/ FACE CAPS)

NOTES:
1: DETERMINE DESIGN WIND LOAD REQUIREMENT BASED ON WIND VELOCITY, BLDG. HEIGHT, WIND ZONE. USING APPLICABLE ASCE 7-10 STANDARDS.

2: SEE CHARTS ON SHEETS 5-8 FOR ALLOWABLE DESIGN LOAD CAPACITY FOR DESIRED GLASS SIZE.

3: SEE CHARTS ON SHEET 9 FOR ALLOWABLE DESIGN LOAD CAPACITY OF MULLION HEIGHTS AND MODULE WIDTHS. THE CAPACITY SHOULD EQUAL OR EXCEED THE DESIGN LOAD GIVEN FOR THE SPECIFIC PROJECT.

4: SEE CHARTS ON SHEETS 26 & 27 TO SELECT ANCHOR OPTION AND SUBSTRATE WITH CAPACITY EQUAL TO OR GREATER THAN DESIGN LOAD GIVEN FOR THE SPECIFIC PROJECT.

5. CURTAIN WALL SYSTEM IS APPROVED FOR MULTIPLE STORY INSTALLTIONS WHERE MULLION SPANS DO NOT EXCEED MAX. HEIGHTS LISTED ABOVE.

6. LOWEST VALUE OF ALL CHARTS SHALL APPLY FOR THE ENTIRE ASSEMBLY

NOTE:

FOR STRUCTURALLY GLAZED SYSTEM OPTION, SEE FLORIDA BUILDING CODE SECTION 2415 FOR REQUIREMENTS.

FOR MIAMI-DADE CO. B.C.C.O.

PRODUCT REVISED
as complying with the Florida Building Code
Acceptance No 15-0603.19
Expiration Date June 3, 2019
By Manuel Perez
Miami Dade Product Control

enclos corp
2770 Blue Water Road
Eagan, MN 55121-1400
Tel 651-796-6100 • Fax 651-994-6360
Engineering Locations
Eagan, MN • Montreal, QC, CA • Moncton, NB, CA
St. Louis, MO • Manila, PH

REVISIONS

WILLIAM D. COOK LICENSED PROFESSIONAL ENGINEER
SEAL
No 43904
MAR 13 2017
STATE OF
Reviewed For Structural Integrity Only

BROMLEY • COOK ENGINEERING, INC.
STRUCTURAL ENGINEERING SERVICES
5440 N.W. 33RD AVENUE SUITE 100
FORT LAUDERDALE, FLORIDA 33309
TEL: (954) 772-4624 FAX (954) 772-4625
CERT. OF AUTH. #00009124
WILLIAM D. COOK P.E.
FLA P.E. # 43904
FLA S.I. # 2008

| Date | Scale |
|---|---|
| 4/17/14 | |

Drawing No.
7030TSSMI

Drawing Title
7030 SERIES CURTAIN WALL
TWIN SPAN
SMALL MISSILE IMPACT

Sheet No.
3/31

chris devy
08/18/2015

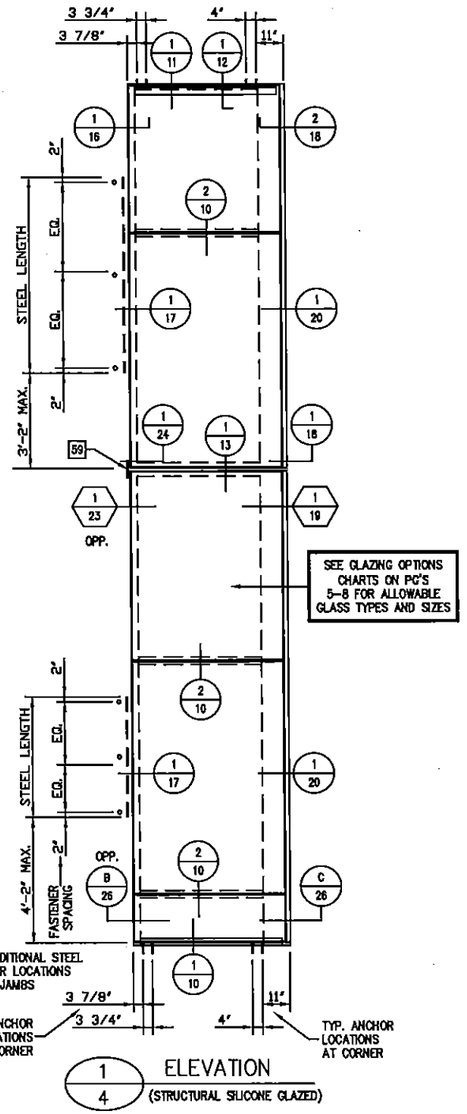


1/4 ELEVATION
(STRUCTURAL SILICONE GLAZED)

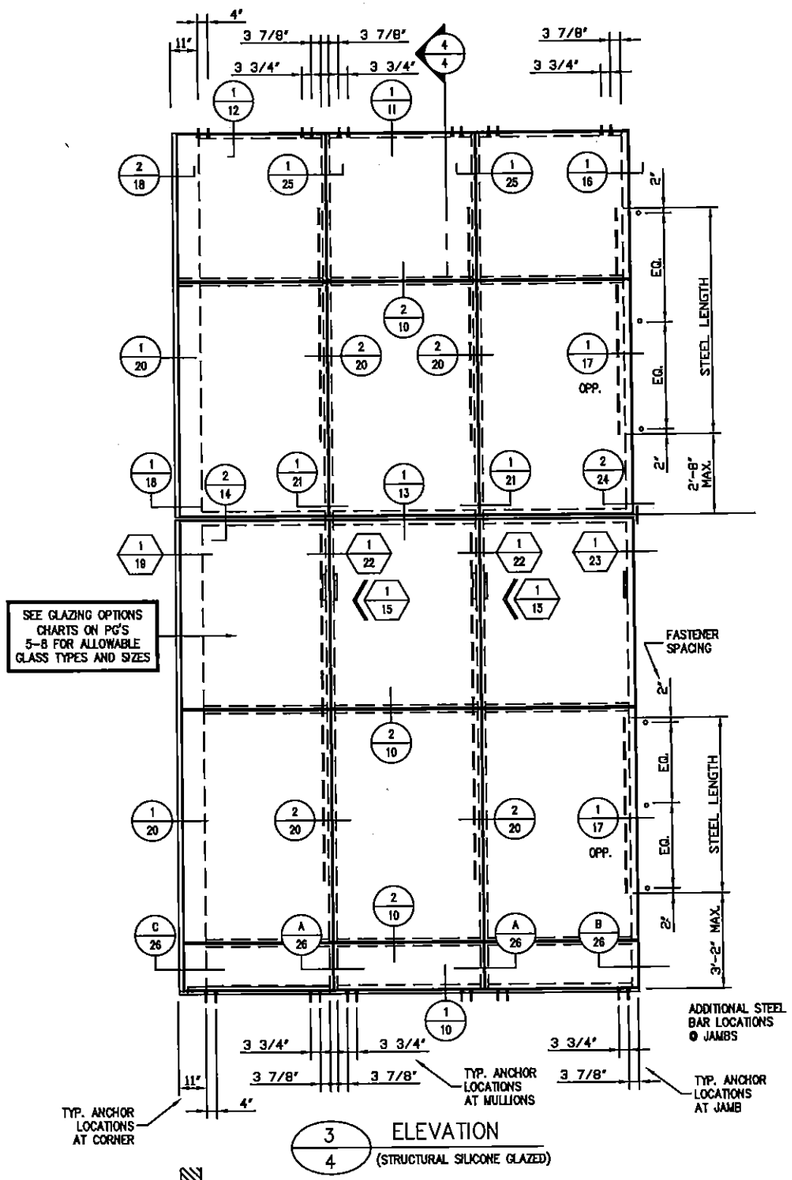


3/4 ELEVATION
(STRUCTURAL SILICONE GLAZED)

## STRUCTURALLY GLAZED SYSTEM (4-SIDED)

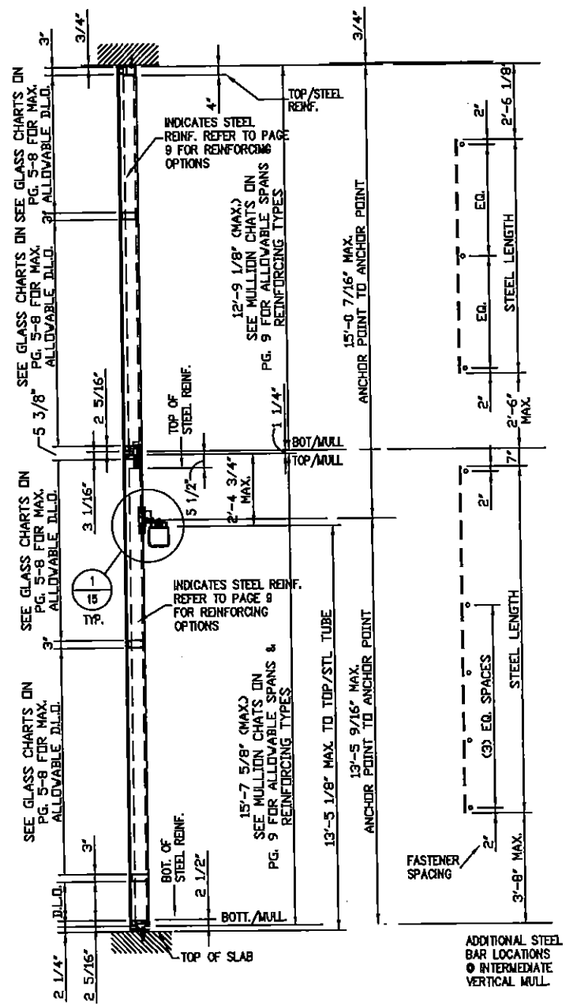


4/4 TYPICAL SECTION
(STRUCTURAL SILICONE GLAZED)

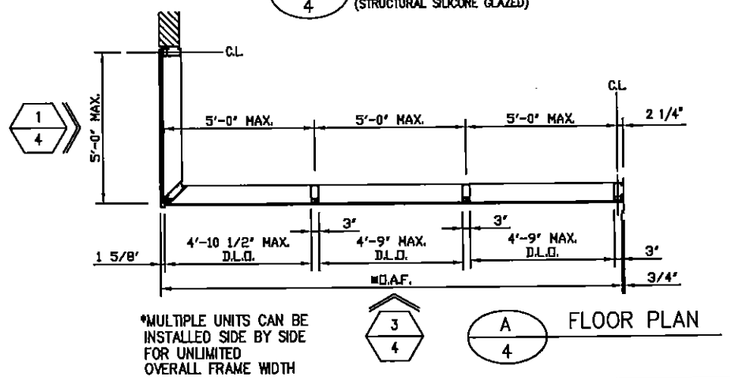


*MULTIPLE UNITS CAN BE INSTALLED SIDE BY SIDE FOR UNLIMITED OVERALL FRAME WIDTH

3/4

A/4 FLOOR PLAN

NOTES:
1: DETERMINE DESIGN WIND LOAD REQUIREMENT BASED ON WIND VELOCITY, BLDG. HEIGHT, WIND ZONE. USING APPLICABLE ASCE 7-10 STANDARDS.

2: SEE CHARTS ON SHEETS 5-8 FOR ALLOWABLE DESIGN LOAD CAPACITY FOR DESIRED GLASS SIZE.

3: SEE CHARTS ON SHEET 9 FOR ALLOWABLE DESIGN LOAD CAPACITY OF MULLION HEIGHTS AND MODULE WIDTHS. THE CAPACITY SHOULD EQUAL OR EXCEED THE DESIGN LOAD GIVEN FOR THE SPECIFIC PROJECT.

4: SEE CHARTS ON SHEETS 26 & 27 TO SELECT ANCHOR OPTION AND SUBSTRATE WITH CAPACITY EQUAL TO OR GREATER THAN DESIGN LOAD GIVEN FOR THE SPECIFIC PROJECT.

5. CURTAIN WALL SYSTEM IS APPROVED FOR MULTIPLE STORY INSTALLTIONS WHERE MULLION SPANS DO NOT EXCEED MAX. HEIGHTS LISTED ABOVE.

6. LOWEST VALUE OF ALL CHARTS SHALL APPLY FOR THE ENTIRE ASSEMBLY

NOTE:

FOR STRUCTURALLY GLAZED SYSTEM OPTION, SEE FLORIDA BUILDING CODE SECTION 2415 FOR REQUIREMENTS.

FOR MIAMI-DADE CO. B.C.C.O.

PRODUCT REVISED
as complying with the Florida Building Code
Acceptance No 15-0603.19
Expiration Date June 3, 2019
By
Miami Dade Product Control

enclos corp
2770 Blue Water Road
Eagan, MN 55121-1400
Tel 651-796-6100 • Fax 651-994-6880
Engineering Locations
Eagan, MN • Montreal, QC, CA • Moncton, NB, CA
St. Louis, MO • Manila, PH

REVISIONS

WILLIAM D. COOK LICENSE No 43904 STATE OF FLORIDA PROFESSIONAL ENGINEER
MAR 3 1 2008
Reviewed For Structural Integrity Only

BROMLEY • COOK ENGINEERING, INC.
STRUCTURAL ENGINEERING SERVICES
5440 N.W. 33RD AVENUE SUITE 100
FORT LAUDERDALE, FLORIDA 33309
TEL: (954) 772-4624 FAX: (954) 772-4635
CERT. OF AUTH. #00009124
WILLIAM D. COOK P.E.
FLA P.E. # 43904
FLA S.I. # 2008

| Date | Scale |
|---|---|
| 4/17/14 | |

Drawing No.
7030TSSMI

Drawing Title
7030 SERIES CURTAIN WALL
TWIN SPAN
SMALL MISSILE IMPACT

Sheet No.
4/31

chris devy
08/18/2015

# CAPTURED SYSTEM (9/16" GLASS)

## MAX. DESIGN PRESSURES (P.S.F.) FOR VARIOUS GLASS TYPES

| GLASS WD. (W) D.L.O. | GLASS HGT. (H) D.L.O. | GLASS TYPES (MONOLITHIC LAMINATED – SMALL MISSILE IMPACT) | | | | |
|---|---|---|---|---|---|---|
| | | I | It | M | | |
| 42" 48" 52" 54" 57" | 54 13/16" | +90, −90 | +110, −130 | +110, −130 ↓ +110, −130 | | |
| 42" 48" 52" 54" 57" | 60" | | | | | |
| 42" 48" 52" 54" 57" | 72" | | | | | |
| 42" 48" 52" 54" 57" | 78" | | | | | |
| 42" 48" 52" 54" 57" | 84" | | | | | |
| 42" 48" 52" 54" 57" | 90" | +90, −90 | +110, −130 | | | |

| TESTED GLASS (MONOLITHIC): | | |
|---|---|---|
| I | 57" X 90" | +90 / −90 |
| It | 57" X 90" | +110 / −130 |
| M | 57" X 54 13/16" | +110 / −130 |

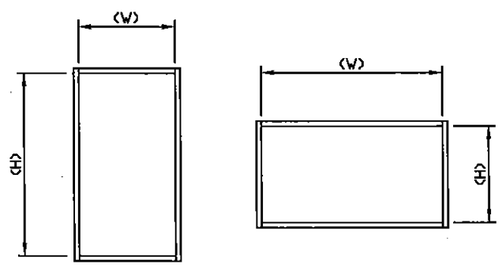


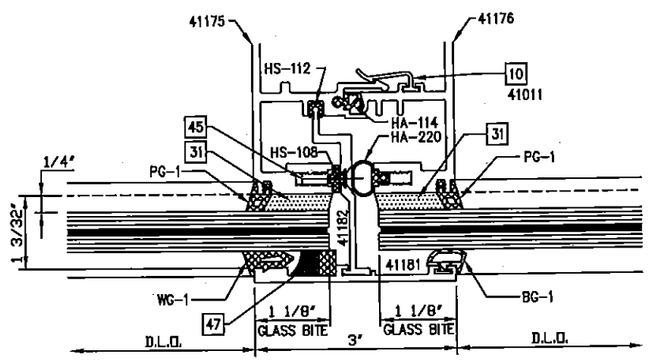


1/5 GLAZING DETAIL
9/16" CAPTURED GLASS
● TYP. VERTICAL MULLION

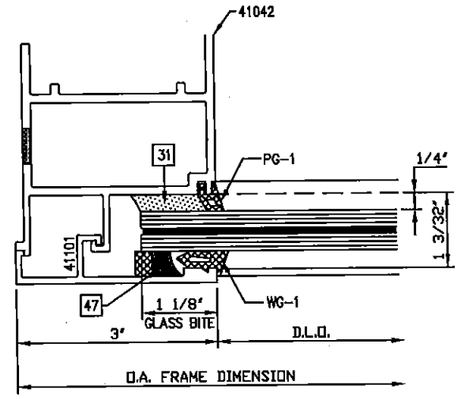


2/5 GLAZING DETAIL
9/16" CAPTURED GLASS ● JAMB

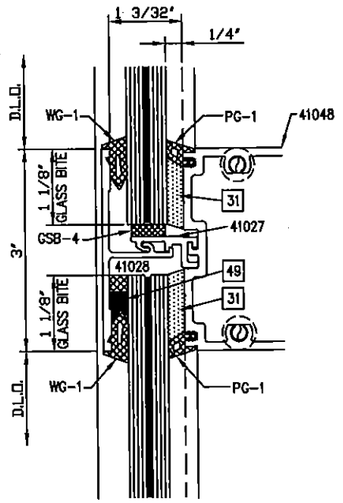


3/5 GLAZING DETAIL
9/16" CAPTURED GLASS
● INTERMEDIATE HORIZONTAL

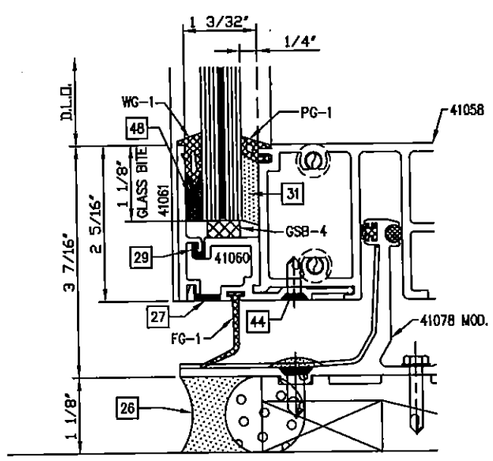


4/5 GLAZING DETAIL
9/16" CAPTURED GLASS ● TYP. SILL

FOR MIAMI-DADE CO. B.C.C.O.

PRODUCT REVISED
as complying with the Florida
Building Code
Acceptance No 15-0603.19
Expiration Date June 3, 2019
By Manuel Perez
Miami-Dade Product Control


enclos corp
2770 Blue Water Road
Eagan, MN 55121-1400
Tel 651-796-6100 • Fax 651-994-6360
Engineering Locations
Eagan, MN • Montreal, QC, CA • Moncton, NB, CA
St. Louis, MO • Manila, PH


REVISIONS

WILLIAM D. COOK LICENSE No 43904 STATE OF FLORIDA PROFESSIONAL ENGINEER
MAR 3 1 2015
Reviewed For Structural Integrity Only


BROMLEY • COOK ENGINEERING, INC.
STRUCTURAL ENGINEERING SERVICES
5440 N.W. 33RD AVENUE SUITE 100
FORT LAUDERDALE, FLORIDA 33309
TEL: (954) 772-4624 FAX: (954) 772-4625
CERT. OF AUTH. #00009124
WILLIAM D. COOK P.E.
FLA P.E. # 43904
FLA SI. # 2008


| Date | Scale |
|---|---|
| 4/17/14 | |

Drawing No.
7030TSSMI

Drawing Title
7030 SERIES CURTAIN WALL
TWIN SPAN
SMALL MISSILE IMPACT

Sheet No.
5/31

08/18/2015 chris devy

# STRUCTURALLY GLAZED SYSTEM (9/16" GLASS)

## MAX. DESIGN PRESSURES (P.S.F.) FOR VARIOUS GLASS TYPES

| GLASS WD. (W) D.L.O. | GLASS HGT. (H) D.L.O. | GLASS TYPES (MONOLITHIC LAMINATED – SMALL MISSILE IMPACT) | | | | |
|---|---|---|---|---|---|---|
| | | I | It | M | | |
| 42" 48" 52" 54" 57" | 54 3/4" | +90, −90 | +110, −130 | +110, −130 | | |
| 42" 48" 52" 54" 57" | 60" | | | | | |
| 42" 48" 52" 54" 57" | 72" | | | | | |
| 42" 48" 52" 54" 57" | 78" | | | | | |
| 42" 48" 52" 54" 57" | 84" | | | | | |
| 42" 48" 52" 54" 57" | 90" | | | | | |

| TESTED GLASS (MONOLITHIC): | | |
|---|---|---|
| I | 57" X 90" | +90 / −90 |
| It | 57" X 90" | +110 / −130 |
| M | 57" X 54 13/16" | +110 / −130 |

## SILICONE JOINT WIDTH REQ'D. FOR STRUCTURAL GLAZING

| GLASS WIDTH (D.L.O. MAX.) | WIND PRESSURE (MAX.) | JOINT DEPTH X WIDTH (MIN.) | MULLION WIDTH REQ'D. (MIN.) |
|---|---|---|---|
| 40" | 130 | 1/4" X 7/8" | STANDARD 3" WIDE MULLION |
| 44" | 120 | 1/4" X 7/8" | STANDARD 3" WIDE MULLION |
| 48" | 110 | 1/4" X 7/8" | STANDARD 3" WIDE MULLION |
| 52" | 100 | 1/4" X 7/8" | STANDARD 3" WIDE MULLION |
| 57" | 90 | 1/4" X 7/8" | STANDARD 3" WIDE MULLION |
| 57" | 130 | 1/4" X 1 3/8" | 4" WIDE MULLION |

DOW CORNING 983 OR 995 STRUCTURAL SILICONE SEALANT
STRUCTURAL SILICONE BEAD [31] SHALL BE 7/8" x 1/4"
OR 1/4" x 1 3/8" AS NOTED ABOVE

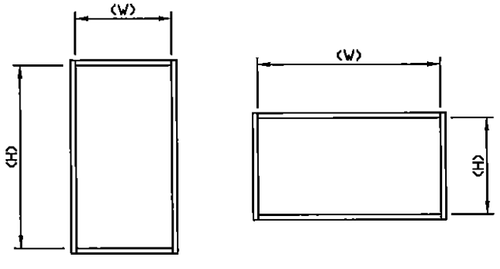


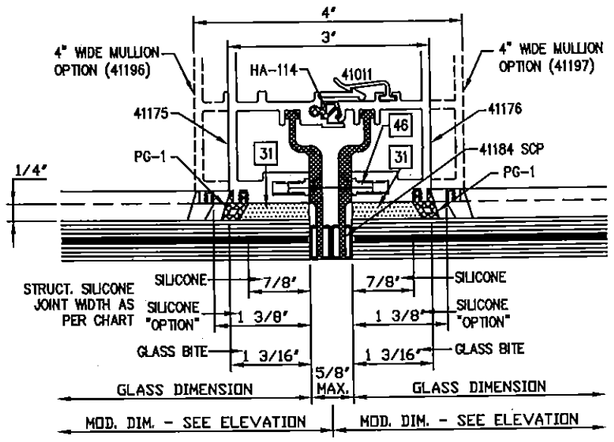


1/6 GLAZING DETAIL (BUTT JOINT W/ GASKET)
9/16" STRUCTURALLY GLAZED
● TYP. VERTICAL MULLION

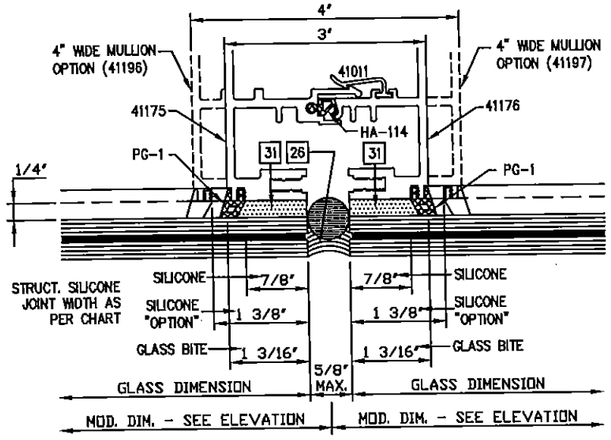


2/6 GLAZING DETAIL (SILICONE BUTT JOINT)
9/16" STRUCTURALLY GLAZED
● TYP. VERTICAL MULLION

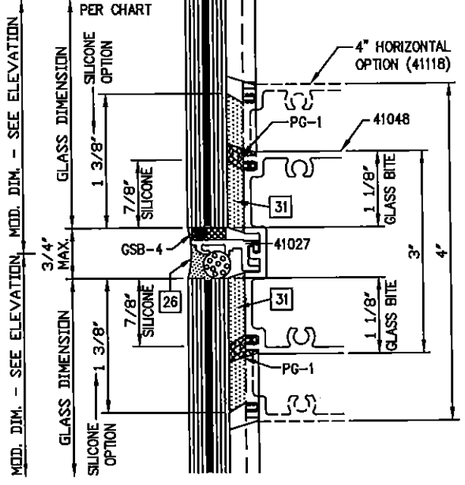


3/6 GLAZING DETAIL
9/16" STRUCTURALLY GLAZED
● INTERMEDIATE HORIZONTAL

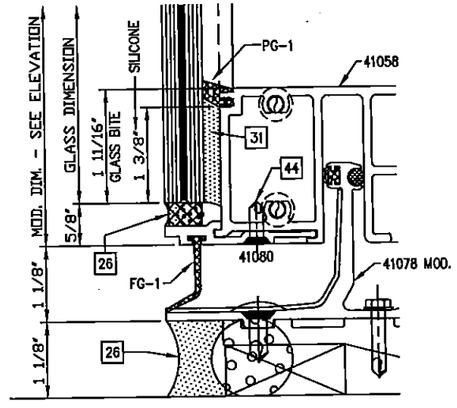


4/6 GLAZING DETAIL
9/16" STRUCTURALLY GLAZED ● TYP. SILL

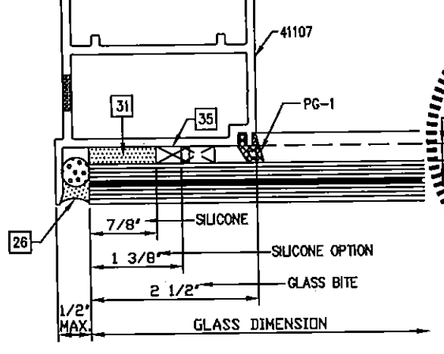


5/6 GLAZING DETAIL
9/16" STRUCTURALLY GLAZED ● JAMB

FOR MIAMI-DADE CO. B.C.C.O.

PRODUCT REVISED
as complying with the Florida
Building Code
Acceptance No. 15-0603.19
Expiration Date June 3, 2019
By Manuel Perez
Miami-Dade Product Control

WILLIAM D. COOK LICENSE No 43904 STATE OF FLORIDA PROFESSIONAL ENGINEER
MAR 3 1 2015
Reviewed For Structural Integrity Only


enclos corp
2770 Blue Water Road
Eagan, MN 55121-1400
Tel. 651-796-6100 • Fax 651-994-6360
Engineering Locations
Eagan, MN • Montreal, QC, CA • Moncton, NB, CA
St. Louis, MO • Manilla, PH

BROMLEY · COOK ENGINEERING, INC.
STRUCTURAL ENGINEERING SERVICES
5440 N.W. 33RD AVENUE SUITE 101
FORT LAUDERDALE, FLORIDA 33309
TEL: (954) 772-4624 FAX: (954) 772-4627
CERT. OF AUTH. #00009124
WILLIAM D. COOK P.E.
FLA P.E. # 43904
FLA S.I. # 2008


REVISIONS

| Date | Scale |
|---|---|
| 4/17/14 | |

Drawing No. 7030TSSMI

Drawing Title: 7030 SERIES CURTAIN WALL
TWIN SPAN
SMALL MISSILE IMPACT

Sheet No. 6/31

chris dovy
05/18/2015

## MAX. DESIGN PRESSURES (P.S.F.) FOR VARIOUS GLASS TYPES

| GLASS WD. (W) D.L.O. | GLASS HGT. (H) D.L.O. | GLASS TYPES (LAMINATED/INSULTAED – SMALL MISSILE IMPACT) | |
|---|---|---|---|
| | | ◇ J | ◇ JT |
| 42" 48" 52" 54" 57" | 54 13/16" | +90, −90 | +110, −130 |
| 42" 48" 52" 54" 57" | 60" | | |
| 42" 48" 52" 54" 57" | 72" | | |
| 42" 48" 52" 54" 57" | 78" | | |
| 42" 48" 52" 54" 57" | 84" | | |
| 42" 48" 52" 54" 57" | 90" | +90, −90 | +110, −130 |

| TESTED GLASS (INSULATED): | | |
|---|---|---|
| J | 57" X 90" | +90 / −90 |
| Jt | 57" X 90" | +110 / −130 |

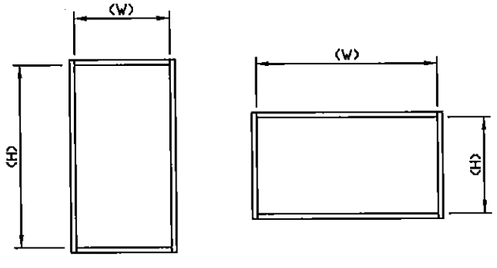


# CAPTURED SYSTEM (1 3/8" GLASS)

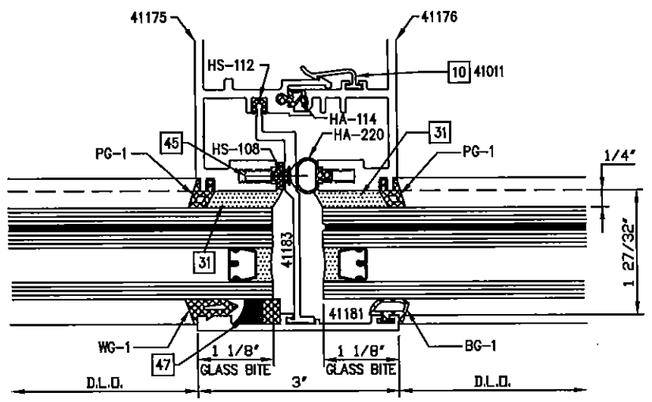


1/7 GLAZING DETAIL
1 3/8" CAPTURED GLASS
● TYP. VERTICAL MULLION

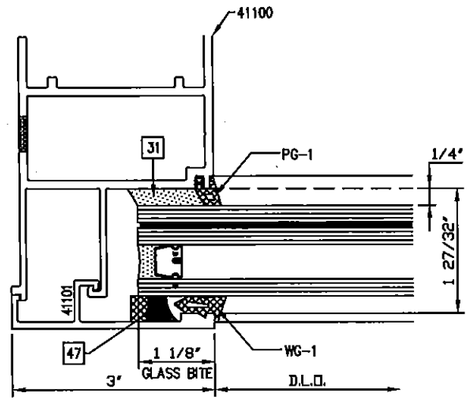


2/7 GLAZING DETAIL
1 3/8" CAPTURED GLASS ● JAMB

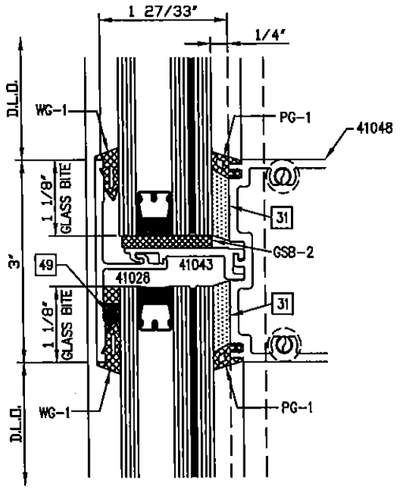


3/7 GLAZING DETAIL
1 3/8" CAPTURED GLASS
● INTERMEDIATE HORIZONTAL

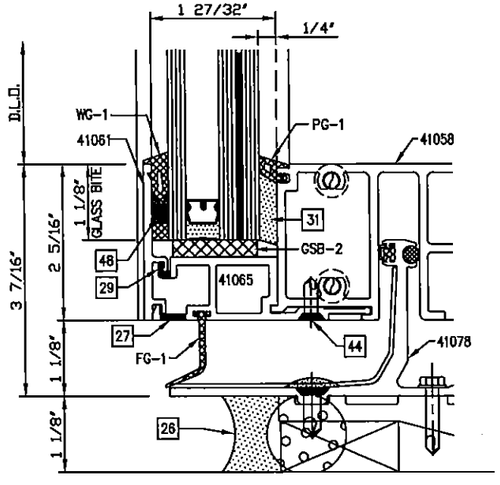


4/7 GLAZING DETAIL
1 3/8" CAPTURED GLASS
● TYP. SILL

FOR MIAMI-DADE CO. B.C.C.O.

PRODUCT REVISED
as complying with the Florida
Building Code
Acceptance No 15-0603.19
Expiration Date June 3 2019
By Manuel Perez
Miami Dade Product Control


enclos corp

2770 Blue Water Road
Eagan, MN 55121-1400
Tel. 651-796-6100 • Fax 651-994-6360

Engineering Locations
Eagan, MN • Montreal, QC, CA • Moncton, NB, CA
St. Louis, MO • Manila, PH


REVISIONS

WILLIAM D. COOK LICENSE No. 43904 STATE OF FLORIDA PROFESSIONAL ENGINEER
MAR 3 1 20
Registered for Structural Integrity Only


BROMLEY • COOK ENGINEERING, INC.
STRUCTURAL ENGINEERING SERVICES
5440 N.W. 33RD AVENUE SUITE 105
FORT LAUDERDALE, FLORIDA 33309
TEL. (954) 772-4624 FAX: (954) 772-4634
CERT. OF AUTH. #00009124
WILLIAM D. COOK P.E.
FLA P.E. # 43904
FLA S.I. # 2008


| Date | Scale |
|---|---|
| 4/17/14 | |

Drawing No.
7030TSSMI

Drawing Title
7030 SERIES CURTAIN WALL
TWIN SPAN
SMALL MISSILE IMPACT

Sheet No.
7/31

chris davy
05/18/2015

# STRUCTURALLY GLAZED SYSTEM (1 3/8" GLASS)

## MAX. DESIGN PRESSURES (P.S.F.) FOR VARIOUS GLASS TYPES

| GLASS WD. (W) D.L.O. | GLASS HGT. (H) D.L.O. | GLASS TYPES (LAMINATED/INSULTAED – SMALL MISSILE IMPACT) | |
|---|---|---|---|
| | | ◇J | ◇JT |
| 42" 48" 52" 54" 57" | 54 13/16" | +90, −90 | +110, −130 |
| 42" 48" 52" 54" 57" | 60" | | |
| 42" 48" 52" 54" 57" | 72" | | |
| 42" 48" 52" 54" 57" | 78" | | |
| 42" 48" 52" 54" 57" | 84" | | |
| 42" 48" 52" 54" 57" | 90" | +90, −90 | +110, −130 |

| TESTED GLASS (INSULATED): | | |
|---|---|---|
| J | 57" X 90" | +90 / −90 |
| Jt | 57" X 90" | +110 / −130 |

## SILICONE JOINT WIDTH REQ'D. FOR STRUCTURAL GLAZING

| GLASS WIDTH (D.L.O. MAX.) | WIND PRESSURE (MAX.) | JOINT DEPTH X WIDTH (MIN.) | MULLION WIDTH REQ'D. (MIN.) |
|---|---|---|---|
| 40" | 130 | 1/4" X 7/8" | STANDARD 3" WIDE MULLION |
| 44" | 120 | 1/4" X 7/8" | STANDARD 3" WIDE MULLION |
| 48" | 110 | 1/4" X 7/8" | STANDARD 3" WIDE MULLION |
| 52" | 100 | 1/4" X 7/8" | STANDARD 3" WIDE MULLION |
| 57" | 90 | 1/4" X 7/8" | STANDARD 3" WIDE MULLION |
| 57" | 130 | 1/4" X 1 3/8" | 4" WIDE MULLION |

DOW CORNING 983 OR 995 STRUCTURAL SILICONE SEALANT
STRUCTURAL SILICONE BEAD 31 SHALL BE 7/8" MOD. DIM. - SEE ELEVATION
OR 1/4" x 1 3/8" AS NOTED ABOVE

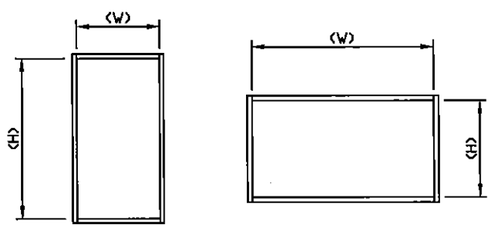


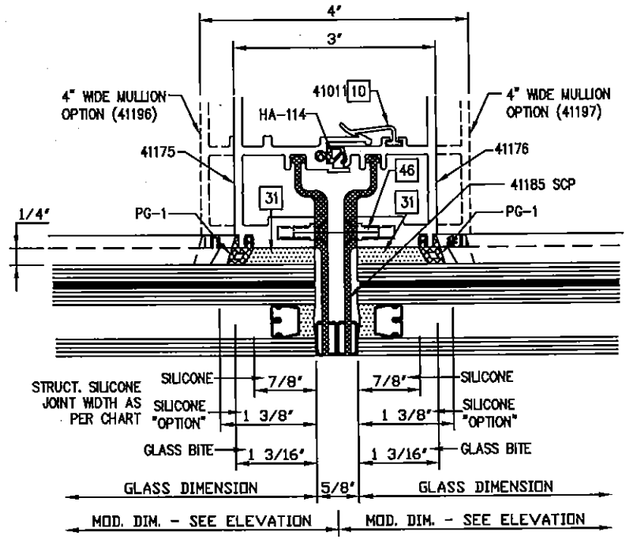


1/8 GLAZING DETAIL (BUTT JOINT W/ GASKET)
1 3/8" STRUCTURALLY GLAZED
● TYP. VERTICAL MULLION

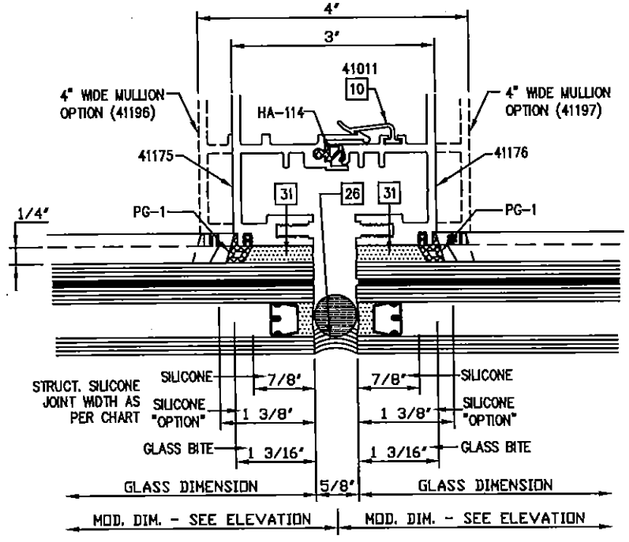


2/8 GLAZING DETAIL (SILICONE BUTT JOINT )
1 3/8" STRUCTURALLY GLAZED
● TYP. VERTICAL MULLION

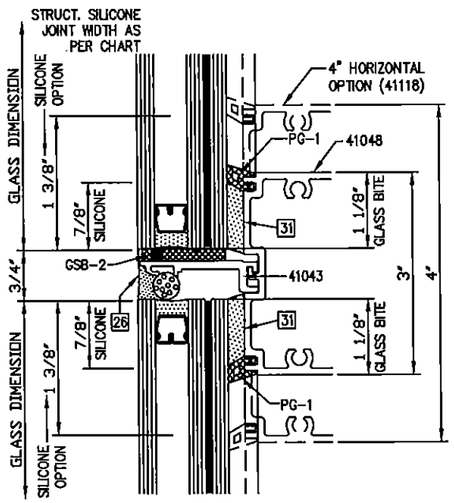


3/8 GLAZING DETAIL (SILICONE BUTT JOINT)
1 3/8" STRUCTURALLY GLAZED
● INTERMEDIATE HORIZONTAL

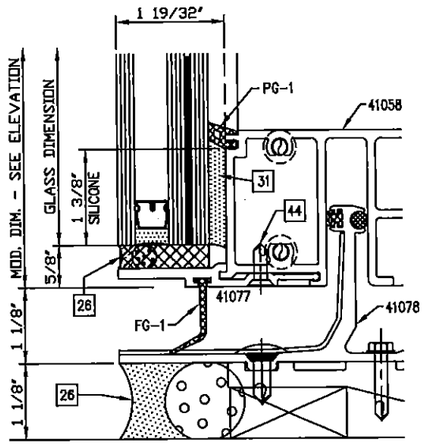


4/8 GLAZING DETAIL
1 3/8" STRUCTURALLY GLAZED
● TYP. SILL

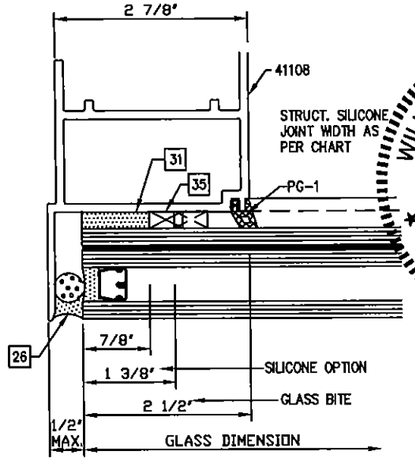


5/8 GLAZING DETAIL
1 3/8" STRUCTURALLY GLAZED ● JAMB

FOR MIAMI-DADE CO. B.C.C.O.

PRODUCT REVISED
as complying with the Florida
Building Code
Acceptance No 15-0603.19
Expiration Date June 3, 2019
By Manuel Serra
Miami Dade Product Control


enclos corp
2770 Blue Water Road
Eagan, MN 55121-1400
Tel. 651-796-6100 • Fax 651-994-6360
Engineering Locations
Eagan, MN • Montreal, QC, CA • Moncton, NB, CA
St. Louis, MO • Manila, PH


REVISIONS


BROMLEY • COOK ENGINEERING, INC.
STRUCTURAL ENGINEERING SERVICES
5440 N.W. 33RD AVENUE SUITE 101
FORT LAUDERDALE, FLORIDA 33309
TEL: (954) 772-4624 FAX: (954) 772-4627
CERT. OF AUTH. #00009124
WILLIAM D. COOK P.E.
FLA P.E. # 43904
FLA S.I. # 2008


WILLIAM D. COOK LICENSE No 43904 STATE OF FLORIDA PROFESSIONAL ENGINEER
SEAL:
Revised For Structural Integrity Only

| Date | Scale |
|---|---|
| 4/17/14 | |

Drawing No. 7030TSSMI

Drawing Title: 7030 SERIES CURTAIN WALL TWIN SPAN SMALL MISSILE IMPACT

Sheet No. 8/31

chris davy
08/18/2015

## MAX. DESIGN PRESSURES (P.S.F.) FOR VARIOUS MULLION OPTIONS

| MODULE WD. (W) | MULLION HT. (H) | MULLION OPTIONS | | | | |
|---|---|---|---|---|---|---|
| | | MULLION TYPE #1 | MULLION TYPE #2 | JAMB TYPE #3 | JAMB TYPE #4 | CORNER MULLION TYPE #5 |
| 45" 51" 55" 59" 60" | 120" | +110, −130 | +110, −130 | +110, −130 | +110, −130 | +110, −130 |
| 45" 51" 55" 59" 60" | 132" | | | | | |
| 45" 51" 55" 59" 60" | 144" | | | | | |
| 45" 51" 55" 59" 60" | 161 9/16" | +110, −130 | | +110, −130 | | |
| 45" 51" 55" 59" 60" | 180 7/16" | | +110, −130 | | +110, −130 | +110, −130 |

41196 41197 — 4" WIDE MULLION OPTION — 41196 41197
41175 41176 — 3" WIDE MULLION OPTION — 41175 41176

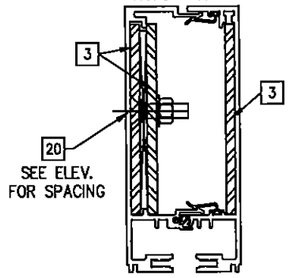


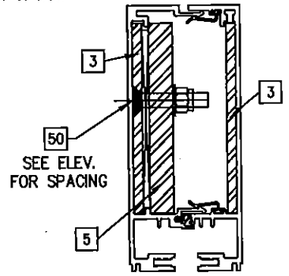


### MULLION TYPE #1

3" MULLION – 41175/41176 OPTION
4" MULLION – 41196/41197 OPTION
EITHER OPTION W/ STL. REINFORCING
1/4" X 5" STEEL BAR (2 PCS. FULL LENGTH)
ADDITIONAL 1/4" X 5" BAR (1 PC.)
SEE ELEV'S FOR LOCATION

**ALUMINUM** Ixx = 22.424 $in^4$ (3" WIDE MULLION)
**ALUMINUM** Ixx = 27.765 $in^4$ (4" WIDE MULLION)

### MULLION TYPE #2

3" MULLION – 41175/41176 OPTION
4" MULLION – 41196/41197 OPTION
EITHER OPTION W/ STL. REINFORCING
1/4" X 5" STEEL BAR (2 PCS.) FULL LENGTH
ADDITIONAL 5/8" X 5" STEEL BAR (1 PC.)
50% OF SPAN CENTERED IN MULLION

**ALUMINUM** Ixx = 22.424 $in^4$ (3" WIDE MULLION)
**ALUMINUM** Ixx = 27.765 $in^4$ (4" WIDE MULLION)

41042

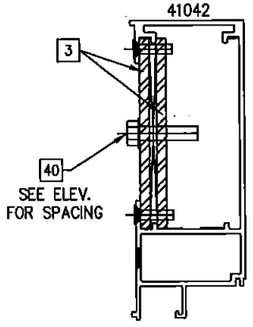


### JAMB TYPE #3

41042 FOR CAPTURED GLASS OPTION (SHOWN)
41107 FOR STRUCTURALLY GLAZED OPTION
EITHER OPTION W/ STL. REINFORCING
3 (1) 1/4" X 5" STEEL BAR (FULL LENGTH)
3 (1) 1/4" X 5" STEEL BAR (SEE ELEV'S FOR LOCATION)

**ALUMINUM** Ixx = 20.688 $in^4$

41107

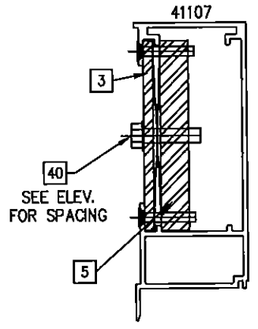


### JAMB TYPE #4

41042 FOR CAPTURED GLASS OPTION
41107 FOR STRUCTURALLY GLAZED OPTION (SHOWN)
EITHER OPTION W/ STL. REINFORCING
3 1/4" X 5" STEEL BAR (FULL LENGTH)
5 5/8" X 5" STEEL BAR (50% OF SPAN CENTERED IN MULLION)

**ALUMINUM** Ixx = 22.125 $in^4$

41177

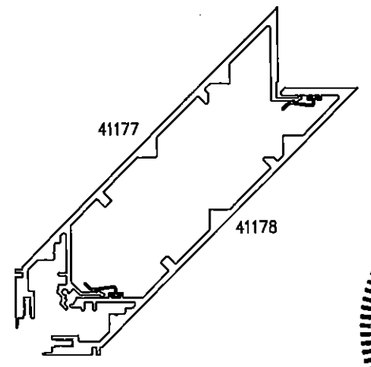


### CORNER MULLION TYPE #5

41177 & 41178 WITH NO REINFORCING

**ALUMINUM** Ixx = 37.436 $in^4$

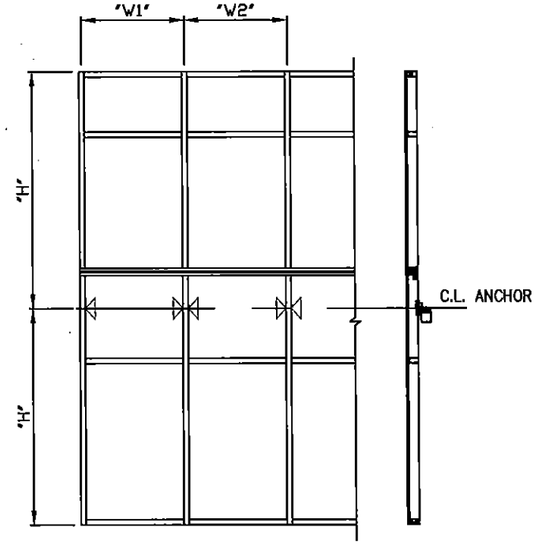


### GENERAL NOTES:

- "H" = MAXIMUM MULLION SPAN
- "W1" & "W2" = C.L. TO C.L. SPACING
- JAMB "W" = $\frac{\text{"W1"}}{2}$
- MULLION "W" = $\frac{\text{"W1"} + \text{"W2"}}{2}$

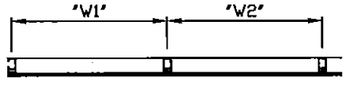


- FOR SINGLE SPAN MAXIMUM DEFL. = L/180 OR 1"
- SPANS ARE LIMITED BY MAXIMUM TESTED LENGTHS AS INDICATED ON ELEV'S AND ON SPAN CHARTS

FOR MIAMI-DADE CO. B.C.C.O.

PRODUCT REVISED
as complying with the Florida
Building Code
Acceptance No 15-0603.19
Expiration Date June 3, 2019
By Manuel Perez
Miami Dade Product Control


enclos corp
2770 Blue Water Road
Eagan, MN 55121-1400
Tel. 651-796-6100 • Fax 651-994-6360
Engineering Locations
Eagan, MN • Montreal, QC, CA • Moncton, NB, CA
St. Louis, MO • Manila, PH


REVISIONS

WILLIAM D. COOK LICENSE No 43904 STATE OF FLORIDA PROFESSIONAL ENGINEER
SEAL
MAR 2 1 2015
Reviewed For Structural Integrity Only


BROMLEY - COOK ENGINEERING, INC.
STRUCTURAL ENGINEERING SERVICES
5440 N.W. 33RD AVENUE SUITE 100
FORT LAUDERDALE, FLORIDA 33309
TEL: (954) 772-4624 FAX: (954) 772-
CERT. OF AUTH. #00009124
WILLIAM D. COOK P.E.
FLA P.E. # 43904
FLA SI. # 2008


| Date | Scale |
|---|---|
| 4/17/14 | |

Drawing No.
7030TSSMI

Drawing Title
7030 SERIES CURTAIN WALL
TWIN SPAN
SMALL MISSILE IMPACT

Sheet No.
9/31

chris devy
08/18/2015

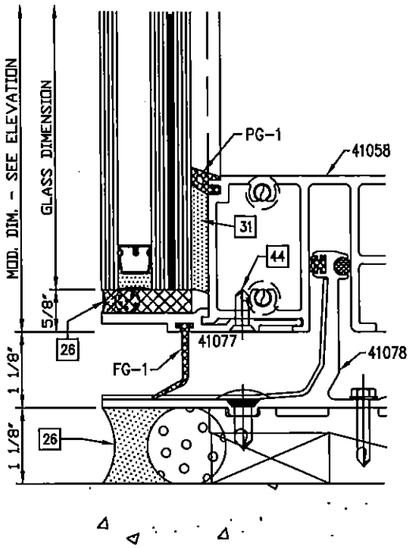


1/10 SILL DETAIL
9/16" STRUCTURALLY GLAZED GLASS OPTION

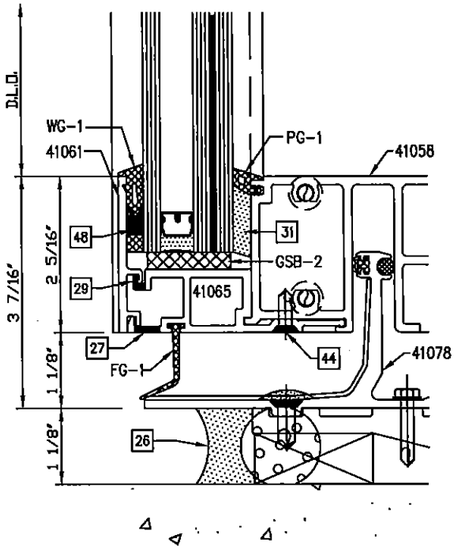


1/10 SILL DETAIL
1 3/8" CAPTURED GLASS OPTION

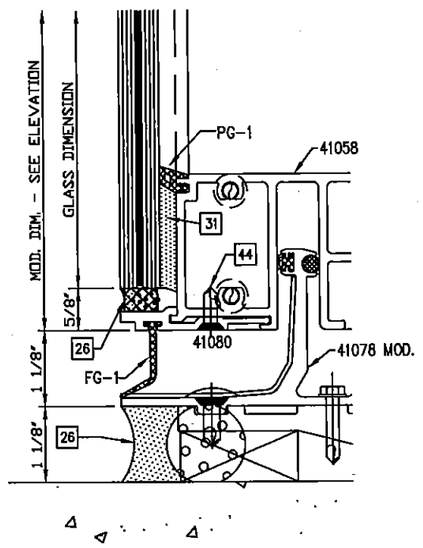


1/10 SILL DETAIL
9/16" STRUCTURALLY GLAZED GLASS OPTION

ALTERNATE PERIMETER SEALANT TYPES AND JOINT SIZES SHALL BE DESIGNED AND APPROVED BY DESIGN PROFESSIONAL OF RECORD AND OR THE SEALANT MANUFACTURER

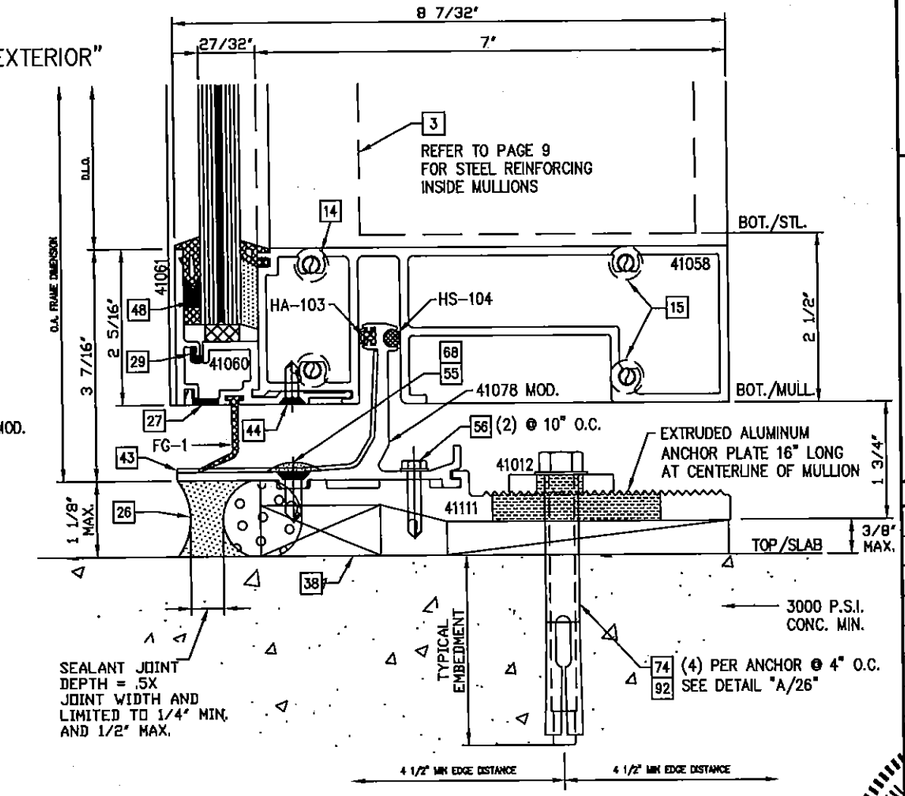


1/10 SILL DETAIL
9/16" CAPTURED GLASS

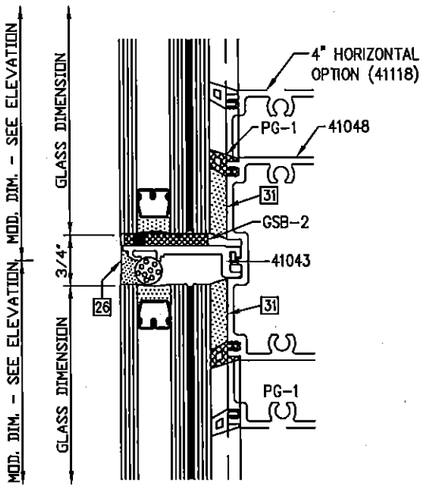


2/10 INTERMEDIATE HORIZ. DETAIL
1 3/8" STRUCTURALLY GLAZED GLASS OPTION

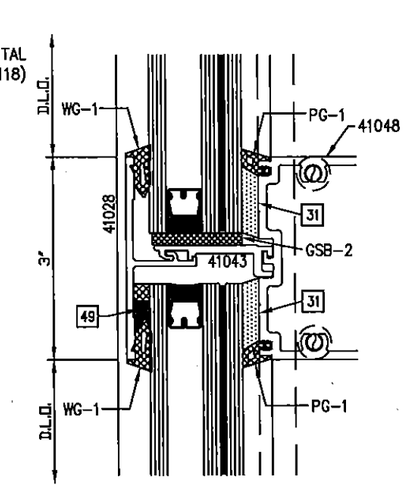


2/10 INTERMEDIATE HORIZ. DETAIL
1 3/8" CAPTURED GLASS OPTION

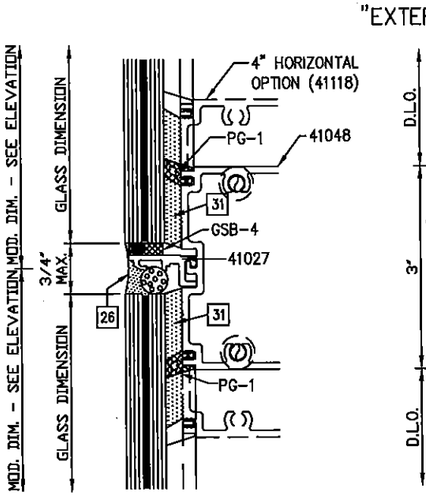


2/10 INTERMEDIATE HORIZ. DETAIL
9/16" STRUCTURALLY GLAZED GLASS OPTION

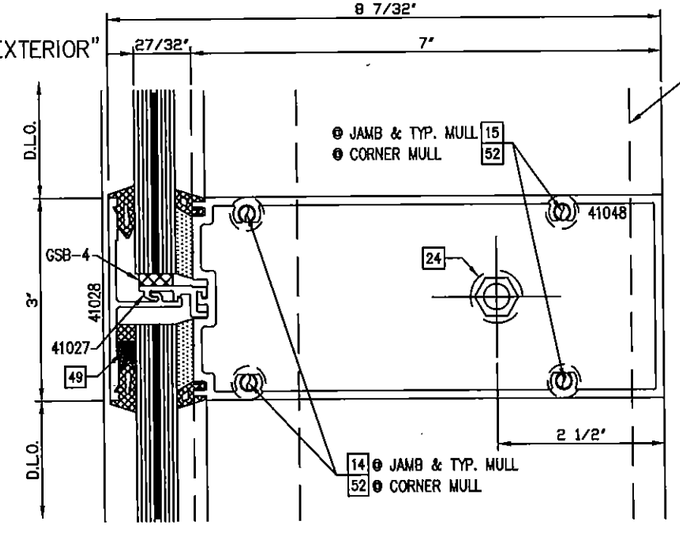


2/10 INTERMEDIATE HORIZ. DETAIL
9/16" CAPTURED GLASS

REFER TO PAGE 26
FOR ALLOWABLE ANCHOR
TYPES & SUBSTRATES

PERIMETER SEALANT OPTIONS:
DOW-CORNING 790 SILICONE
DOW-CORNING 791 SILICONE
DOW-CORNING 795 SILICONE

FOR MIAMI-DADE CO. B.C.C.O.

PRODUCT REVISED
as complying with the Florida
Building Code 15-0603.19
Acceptance No June 3, 2019
Expiration Date
By
Miami Dade Product Control


enclos corp
2770 Blue Water Road
Eagan, MN 55121-1400
Tel. 651-796-6100 • Fax 651-994-6560
Engineering Locations
Eagan, MN • Montreal, QC, CA • Moncton, NB, CA
St. Louis, MO • Manila, PH


REVISIONS

WILLIAM D. COOK LICENSE No 43904 MAR 31 2015 STATE OF FLORIDA PROFESSIONAL ENGINEER
Revised For Structural Integrity Only


BROMLEY - COOK ENGINEERING, INC.
STRUCTURAL ENGINEERING SERVICES
5440 N.W. 33RD AVENUE SUITE 150
FORT LAUDERDALE, FLORIDA 33309
TEL. (954) 772-4624 FAX (954) 772-4634
CERT. OF AUTH. #00009124
WILLIAM D. COOK P.E.
FLA P.E. # 43904
FLA S.I. # 2008


| Date | Scale |
|---|---|
| 4/17/14 | |

Drawing No.
7030TSSMI

Drawing Title
7030 SERIES CURTAIN WALL
TWIN SPAN
SMALL MISSILE IMPACT

Sheet No.
10/31

chris davy
08/18/2015

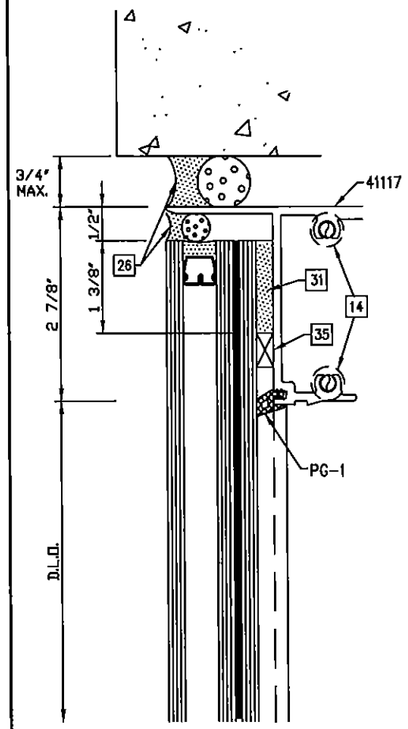


1/11 HEAD DETAIL
1 3/8" STRUCTURALLY GLAZED GLASS OPTION ❶ TYPICAL MULLION

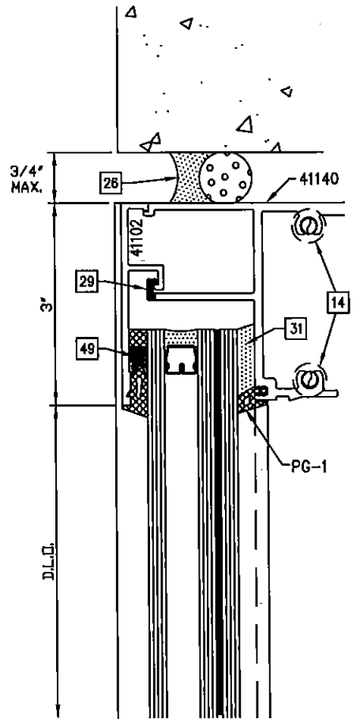


1/11 HEAD DETAIL
1 3/8" CAPTURED GLASS OPTION ❶ TYPICAL MULLION

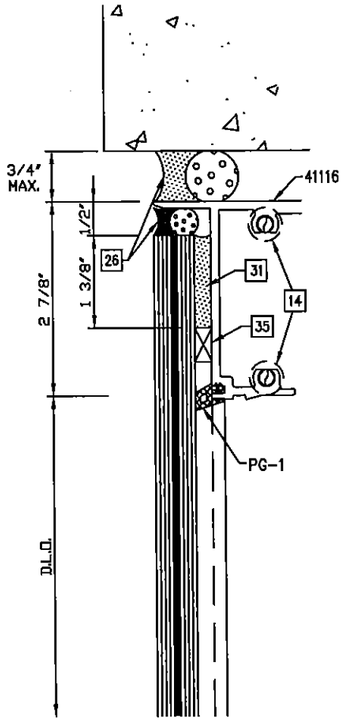


1/11 HEAD DETAIL
9/16" STRUCTURALLY GLAZED GLASS OPTION ❶ TYPICAL MULLION

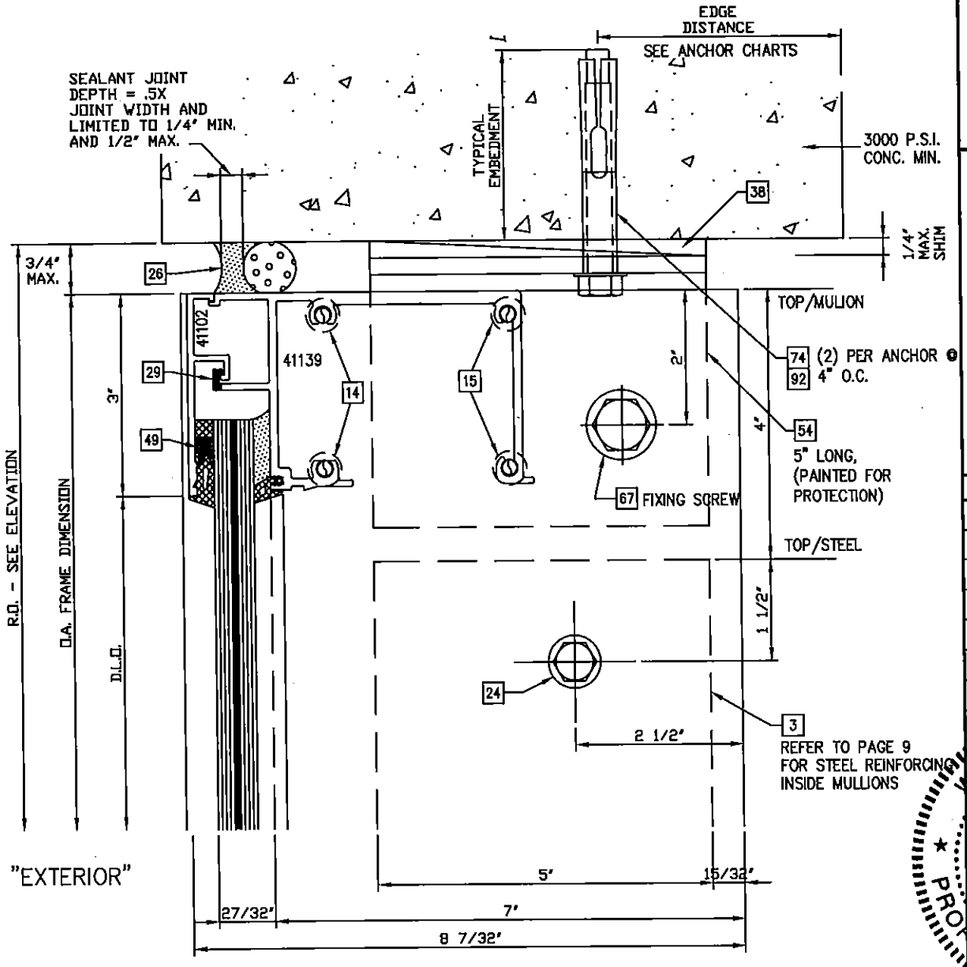


1/11 HEAD DETAIL
9/16" CAPTURED GLASS ❶ TYPICAL MULLION

ALTERNATE PERIMETER SEALANT TYPES AND JOINT SIZES SHALL BE DESIGNED AND APPROVED BY DESIGN PROFESSIONAL OF RECORD AND OR THE SEALANT MANUFACTURER

PERIMETER SEALANT OPTIONS:
DOW-CORNING 790 SILICONE
DOW-CORNING 791 SILICONE
DOW-CORNING 795 SILICONE

REFER TO PAGE 26 FOR ALLOWABLE ANCHOR TYPES & SUBSTRATES

FOR MIAMI-DADE CO. B.C.C.O.

PRODUCT REVISED
as complying with the Florida
Building Code 15-0603.19
Acceptance No
Expiration Date June 3, 2019
By Manuel Perez
Miami-Dade Product Control

enclos corp
2770 Blue Water Road
Eagan, MN 55121-1400
Tel. 651-796-6100 • Fax 651-994-6360
Engineering Locations
Eagan, MN • Montreal, QC, CA • Moncton, NB, CA
St. Louis, MO • Manila, PH

REVISIONS

WILLIAM D. COOK LICENSE No 43904 STATE OF FLORIDA PROFESSIONAL ENGINEER
MAR 3 1 2015
Reviewed For Structural Integrity Only
NOT VALID WITHOUT SIGNATURE AND ORIGINAL RAISED SEAL

BROMLEY - COOK ENGINEERING
STRUCTURAL ENGINEERING SERVICES
5440 N.W. 33RD AVENUE SUITE 105
FORT LAUDERDALE FLORIDA 33309
TEL: (954) 772-4624 FAX: (954) 772-4634
CERT. OF AUTH. #00009124
WILLIAM D. COOK P.E.
FLA P.E. # 43904
FLA S.I. # 2008

| Date | Scale |
|---|---|
| 4/17/14 | |

Drawing No.
7030TSSMI

Drawing Title
7030 SERIES CURTAIN WALL
TWIN SPAN
SMALL MISSILE IMPACT

Sheet No.
11/31

08/15/2015 chris devy

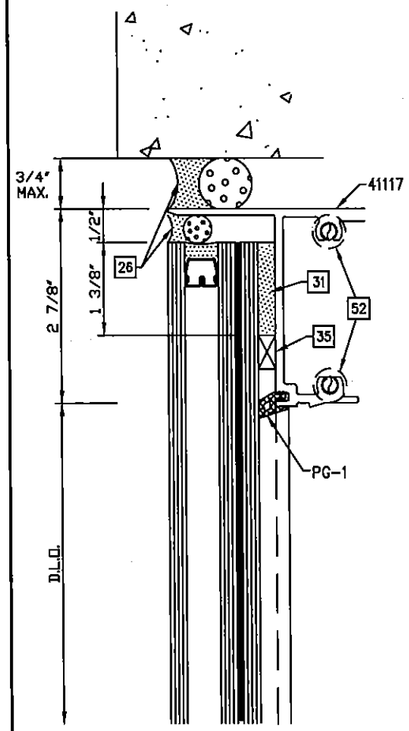


1/12 HEAD DETAIL
1 3/8" STRUCTURALLY GLAZED GLASS OPTION @ CORNER MULLION

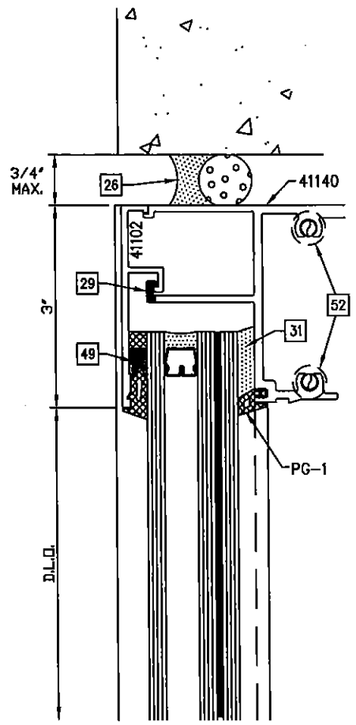


1/12 HEAD DETAIL
1 3/8" CAPTURED GLASS OPTION @ CORNER MULLION

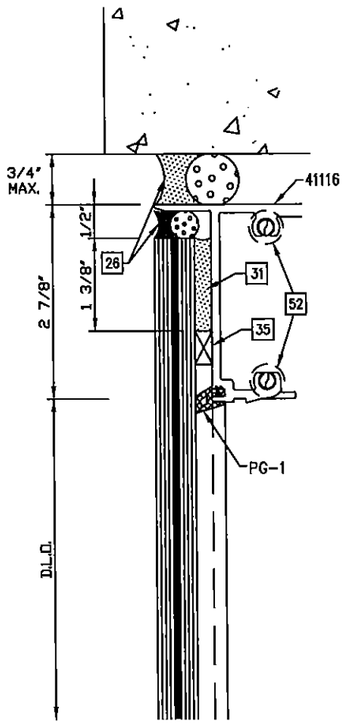


1/12 HEAD DETAIL
9/16" STRUCTURALLY GLAZED GLASS OPTION @ CORNER MULLION

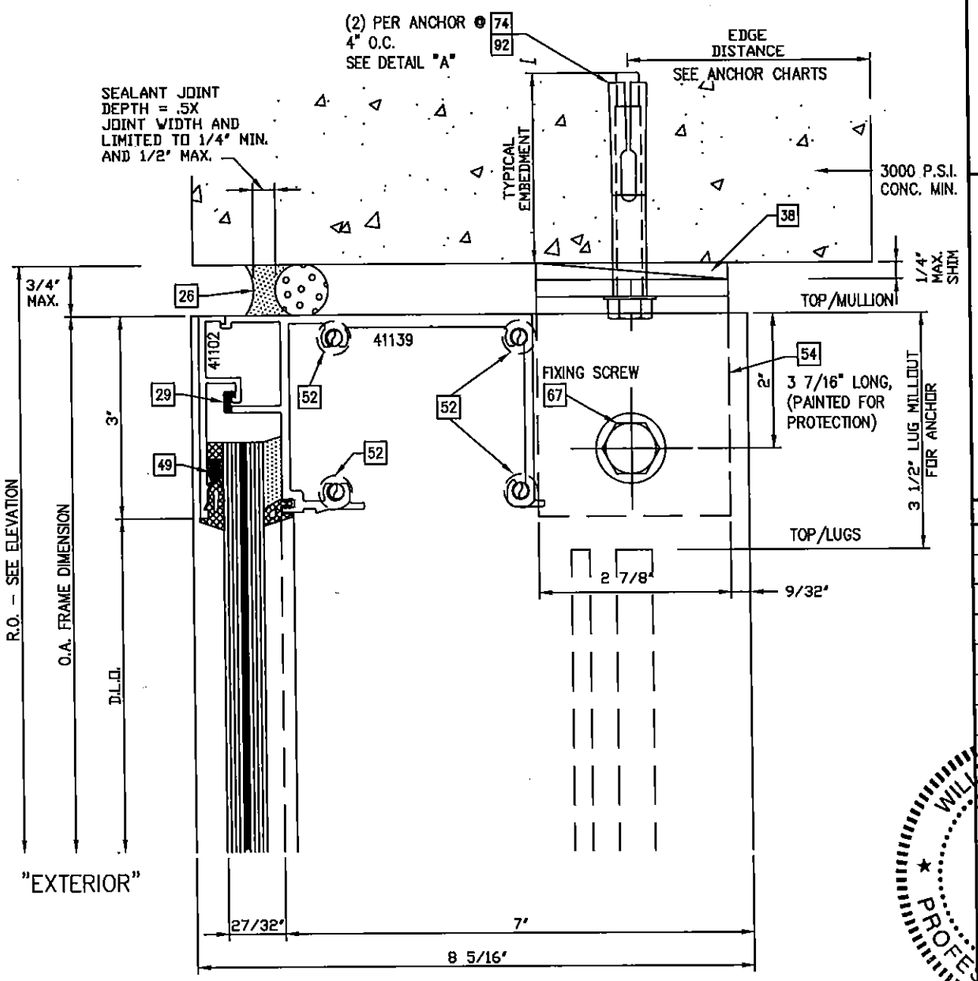


1/12 HEAD DETAIL
9/16" CAPTURED GLASS @ CORNER MULLION

REFER TO PAGE 26 FOR ALLOWABLE ANCHOR TYPES & SUBSTRATES

ALTERNATE PERIMETER SEALANT TYPES AND JOINT SIZES SHALL BE DESIGNED AND APPROVED BY DESIGN PROFESSIONAL OF RECORD AND OR THE SEALANT MANUFACTURER

PERIMETER SEALANT OPTIONS:
DOW-CORNING 790 SILICONE
DOW-CORNING 791 SILICONE
DOW-CORNING 795 SILICONE

FOR MIAMI-DADE CO. B.C.C.O.

PRODUCT REVISED
as complying with the Florida
Building Code
Acceptance No 15-0603.19
Expiration Date: June 5, 2019
By Manuel Perez
Miami Dade Product Control


enclos corp
2770 Blue Water Road
Eagan, MN 55121-1400
Tel. 651-796-6100 • Fax 651-994-6360
Engineering Locations
Eagan, MN • Montreal, QC, CA • Moncton, NB, CA
St. Louis, MO • Manila, PH


REVISIONS

WILLIAM D. COOK LICENSE SEAL No 43904 STATE OF FLORIDA PROFESSIONAL ENGINEER
MAR 31 2015
Reviewed For Structural Integrity Only


BROMLEY · COOK ENGINEERING, LTD.
STRUCTURAL ENGINEERING SERVICES
5440 N.W. 33RD AVENUE SUITE 100
FORT LAUDERDALE, FLORIDA 33309
TEL (954) 772-4624 FAX (954) 772-4627
CERT. OF AUTH. #00009124
WILLIAM D. COOK P.E.
FLA P.E. # 43904
FLA S.I. # 2008


| Date | Scale |
|---|---|
| 4/17/14 | |

Drawing No.
7030TSSMI

Drawing Title
7030 SERIES CURTAIN WALL
TWIN SPAN
SMALL MISSILE IMPACT

Sheet No.
12/31

chris davy
08/18/2015

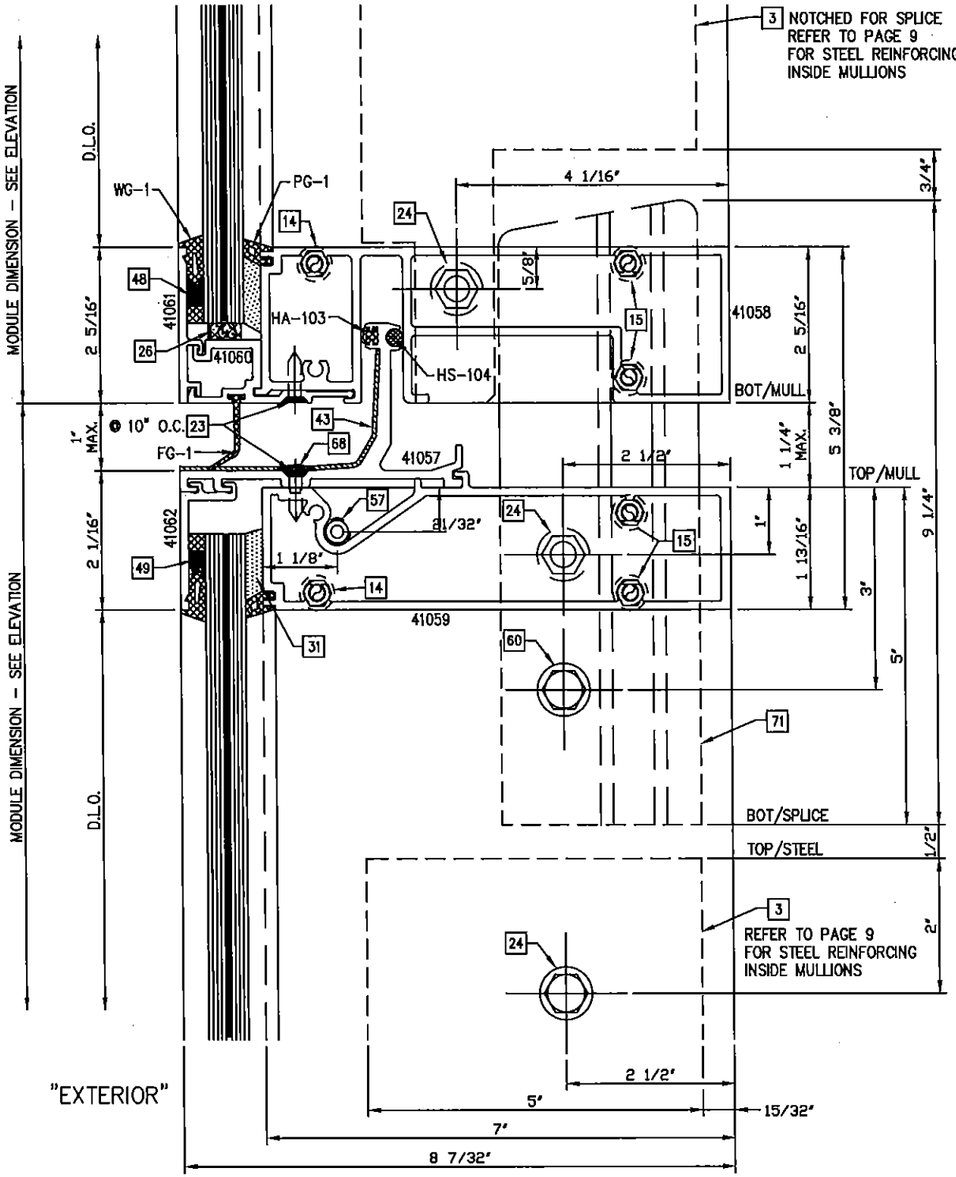


1/13 STACK RAIL DETAIL
9/16" CAPTURED GLASS
@ TYPICAL MULLION

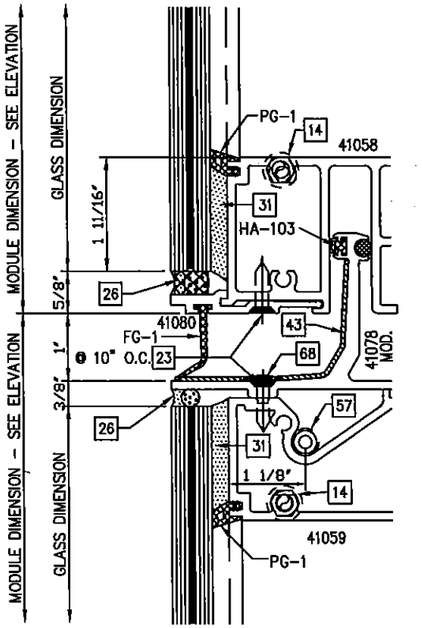


1/14 STACK RAIL DETAIL
9/16" STRUCTURALLY GLAZED OPTION

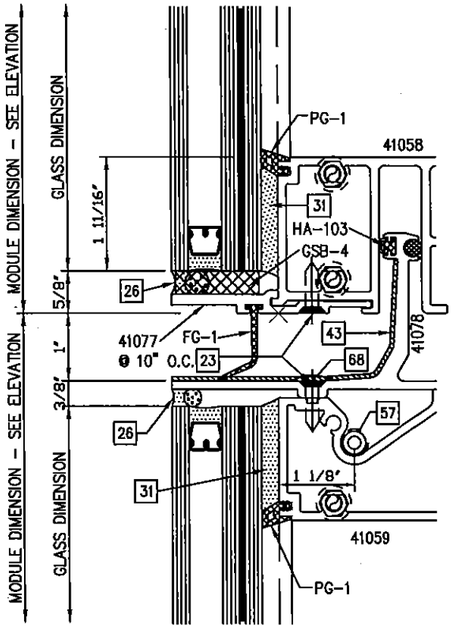


1/14 STACK RAIL DETAIL
1 3/8" STRUCTURALLY GLAZED OPTION

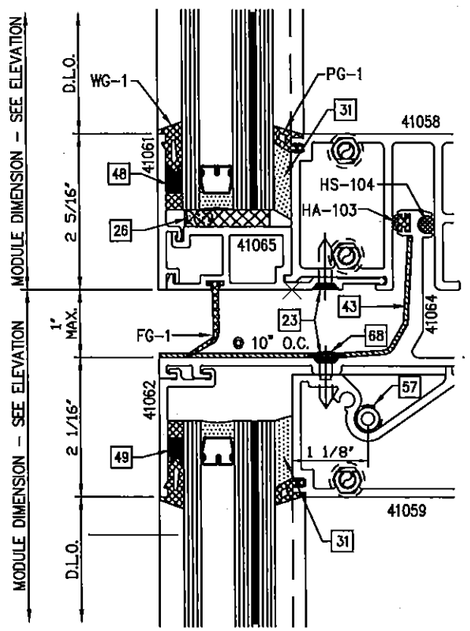


1/14 STACK RAIL DETAIL
1 3/8" CAPTURED GLASS OPTION

FOR MIAMI-DADE CO. B.C.C.O.

PRODUCT REVISED
as complying with the Florida
Building Code
Acceptance No 15-0603.19
Expiration Date June 3, 2019
By Manuel Perez
Miami Dade Product Control


enclos corp
2770 Blue Water Road
Eagan, MN 55121-1400
Tel. 651-796-6100 • Fax 651-994-6360
Engineering Locations
Eagan, MN • Montreal, QC, CA • Moncton, NB, CA
St. Louis, MO • Manila, PH


REVISIONS

WILLIAM D. COOK LICENSE No 43904 STATE OF FLORIDA PROFESSIONAL ENGINEER
MAR 3 1 2015
Reviewed For Structural Integrity Only


BROMLEY - COOK ENGINEERING, INC.
STRUCTURAL ENGINEERING SERVICES
5440 N.W. 33RD AVENUE SUITE 100
FORT LAUDERDALE, FLORIDA 33309
TEL: (954) 772-4624 FAX: (954) 772-4634
CERT. OF AUTH. #00009124
WILLIAM D. COOK P.E.
FLA P.E. # 43904
FLA S.I. # 2008


| Date | Scale |
|---|---|
| 4/17/14 | |

Drawing No.
7030TSSMI

Drawing Title
7030 SERIES CURTAIN WALL
TWIN SPAN
SMALL MISSILE IMPACT

Sheet No.
13/31

08/18/2015 circle deny

FLA S.I. # 2008

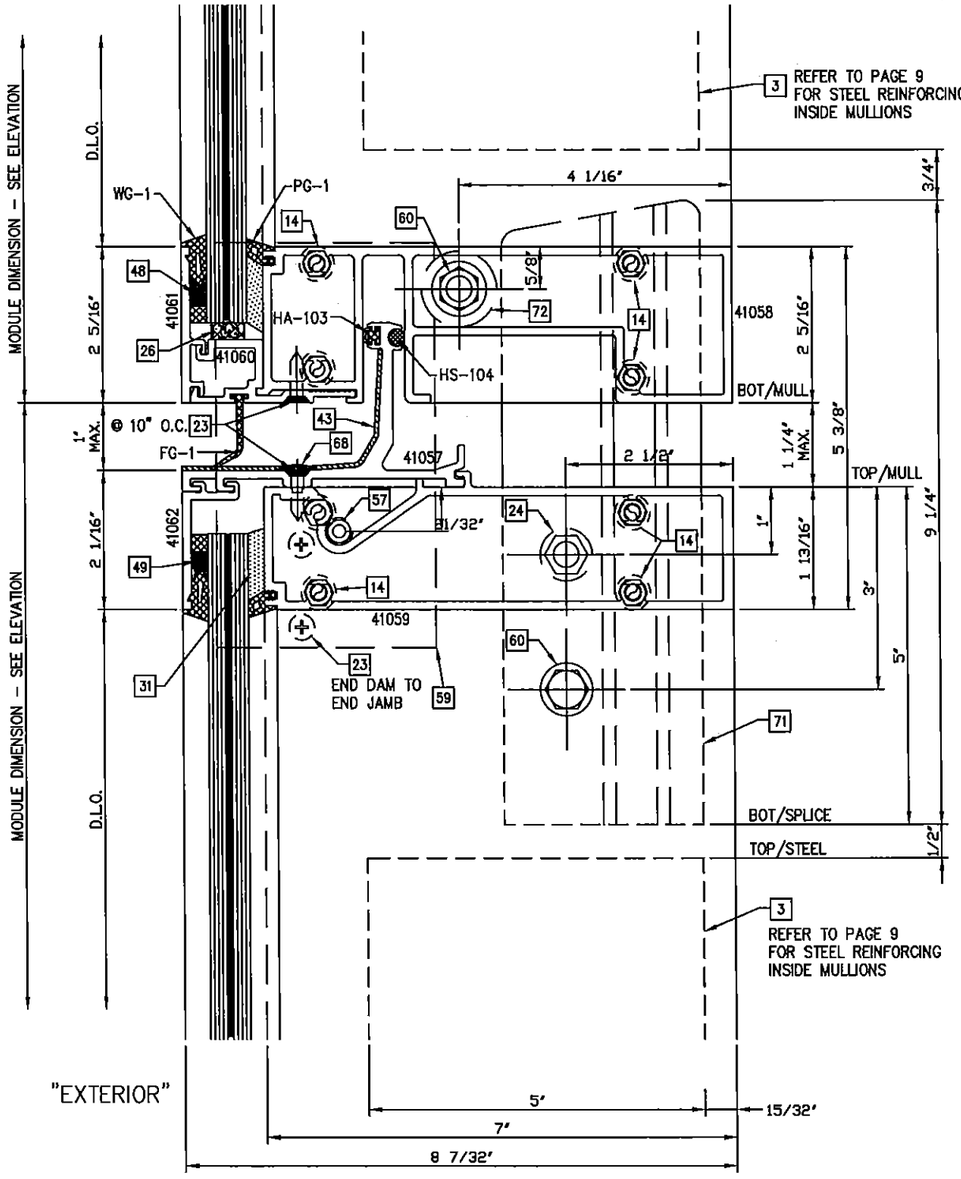


1/14 STACK RAIL DETAIL
9/16" CAPTURED GLASS
@ END JAMB

NOTE:
SEE SHEET 13 FOR OPTIONAL GLAZING DETAILS

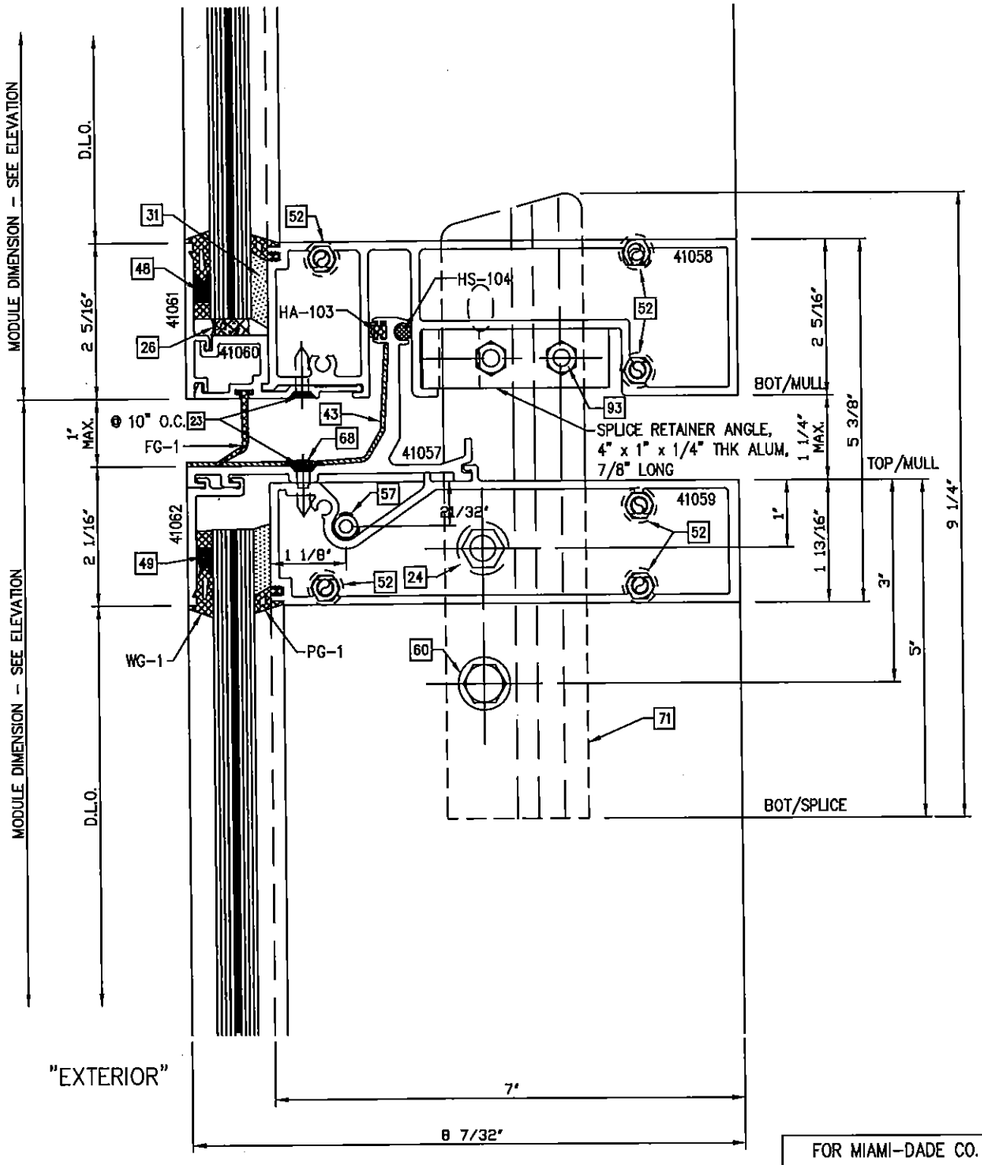


2/14 STACK RAIL DETAIL
9/16" CAPTURED GLASS
@ CORNER MULLION

FOR MIAMI-DADE CO. B.C.C.O.

PRODUCT REVISED
as complying with the Florida
Building Code 15-0603.19
Acceptance No
Expiration Date June 3, 2019
By Manuel Baez
Miami Dade Product Control


enclos corp
2770 Blue Water Road
Eagan, MN 55121-1400
Tel. 651-796-6100 • Fax 651-994-6360
Engineering Locations
Eagan, MN • Montreal, QC, CA • Moncton, NB, CA
St. Louis, MO • Manila, PH


REVISIONS

WILLIAM D. COOK
LICENSE
No 43904
STATE OF
FLORIDA
PROFESSIONAL ENGINEER
MAY 3 1 2013
Reviewed For Structural Integrity Only


BROMLEY · COOK ENGINEERING
STRUCTURAL ENGINEERING SERVICES
5440 N.W. 33RD AVENUE SUITE 101
FORT LAUDERDALE, FLORIDA 33309
TEL (954) 772-4624 FAX (954) 772-4627
CERT. OF AUTH. #00009124
WILLIAM D. COOK P.E.
FLA P.E. # 43904
FLA S.I. # 2008


| Date | Scale |
|---|---|
| 4/17/14 | |

Drawing No.
7030TSSMI

Drawing Title
7030 SERIES CURTAIN WALL
TWIN SPAN
SMALL MISSILE IMPACT

Sheet No.
14/31

chris davy
08/19/2013

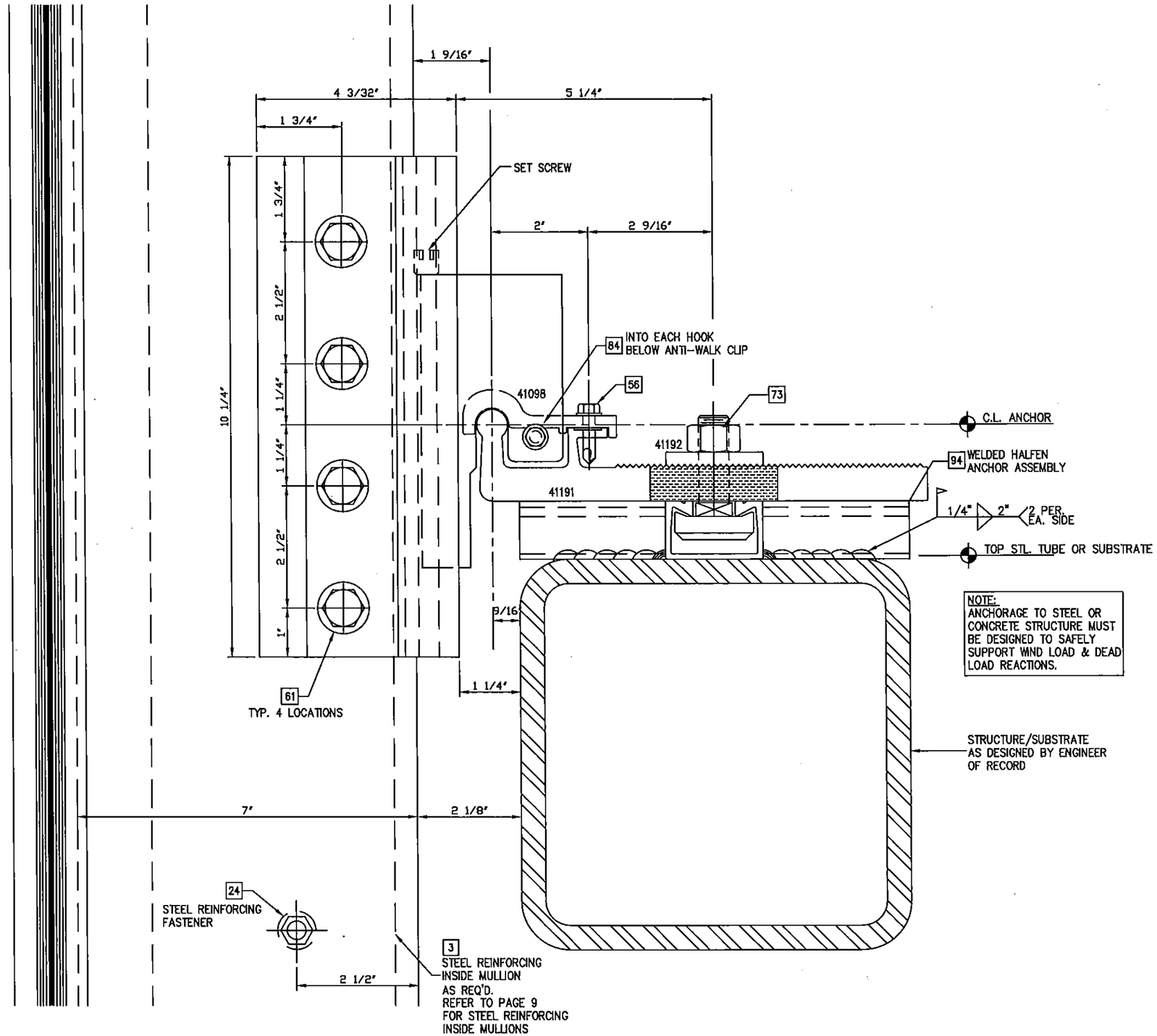


NOTE:
ANCHORAGE TO STEEL OR CONCRETE STRUCTURE MUST BE DESIGNED TO SAFELY SUPPORT WIND LOAD & DEAD LOAD REACTIONS.

"EXTERIOR"

1/15 INTERMEDIATE ANCHOR DETAIL
9/16" CAPTURED GLASS SHOWN
1 3/8" GLASS SIMILAR

FOR MIAMI-DADE CO. B.C.C.O.

PRODUCT REVISED
as complying with the Florida
Building Code
Acceptance No 15.0603.19
Expiration Date June 3, 2019
By Manuel Perez
Miami Dade Product Control


enclos corp
2770 Blue Water Road
Eagan, MN 55121-1400
Tel. 651-796-6100 • Fax 651-994-6380
Engineering Locations
Eagan, MN • Montreal, QC, CA • Moncton, NB, CA
St. Louis, MO • Manilla, PH


REVISIONS

WILLIAM D COOK LICENSE No 43904 STATE OF FLORIDA PROFESSIONAL ENGINEER
MAY 1 2015
Engineer for Structural Integrity Only


BROMLEY - COOK ENGINEERING GROUP
STRUCTURAL ENGINEERING SERVICES
5440 N.W. 33RD AVENUE SUITE 107
FORT LAUDERDALE, FLORIDA 33309
TEL: (954) 772-4624 FAX: (954) 772-4344
CERT. OF AUTH. #00009124
WILLIAM D. COOK P.E.
FLA P.E. # 43904
FLA S.I. # 2008


| Date | Scale |
|---|---|
| 4/17/14 | |

Drawing No.
7030TSSMI

Drawing Title
7030 SERIES CURTAIN WALL
TWIN SPAN
SMALL MISSILE IMPACT

Sheet No.
15/31

chris davy
08/16/2015

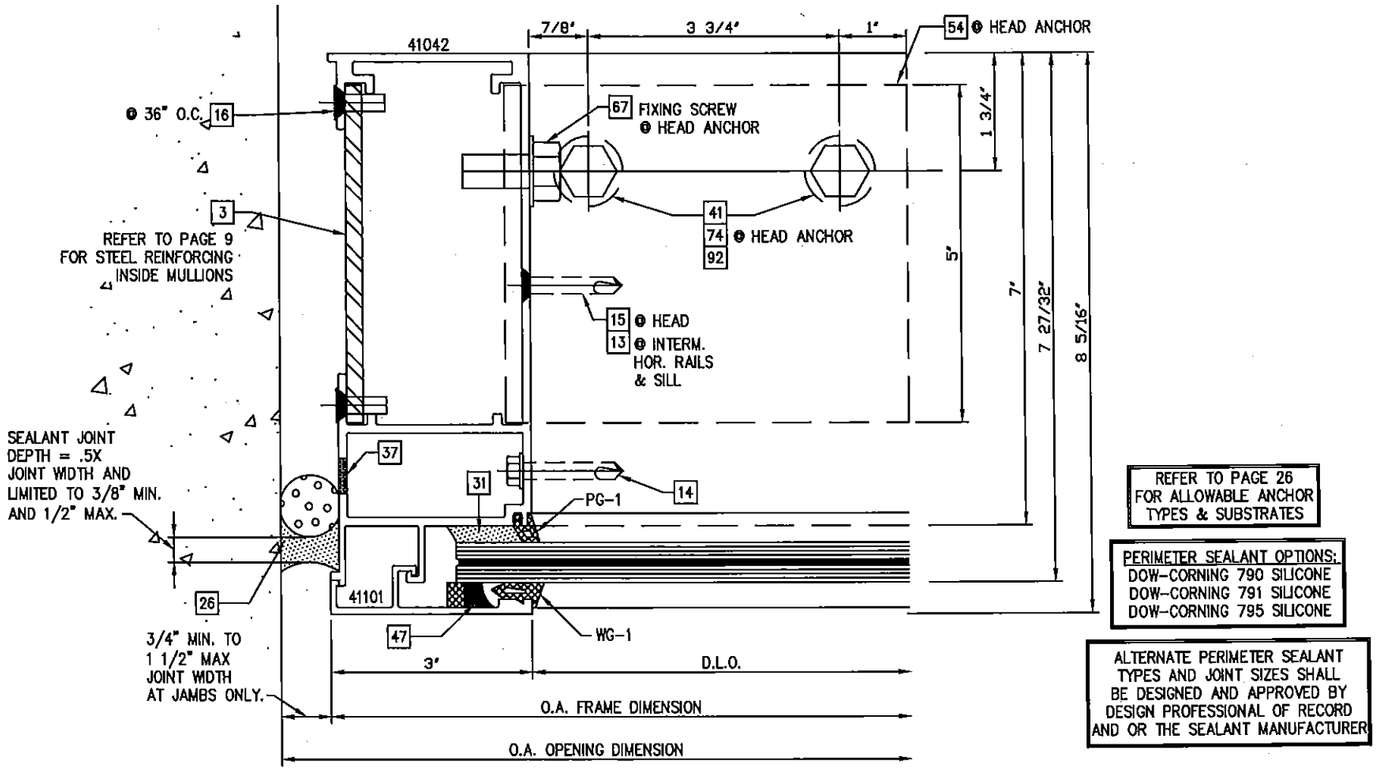


REFER TO PAGE 26 FOR ALLOWABLE ANCHOR TYPES & SUBSTRATES

PERIMETER SEALANT OPTIONS:
DOW-CORNING 790 SILICONE
DOW-CORNING 791 SILICONE
DOW-CORNING 795 SILICONE

ALTERNATE PERIMETER SEALANT TYPES AND JOINT SIZES SHALL BE DESIGNED AND APPROVED BY DESIGN PROFESSIONAL OF RECORD AND OR THE SEALANT MANUFACTURER

1/16 JAMB DETAIL
9/16" CAPTURED GLASS (⌀ HEAD RAIL)

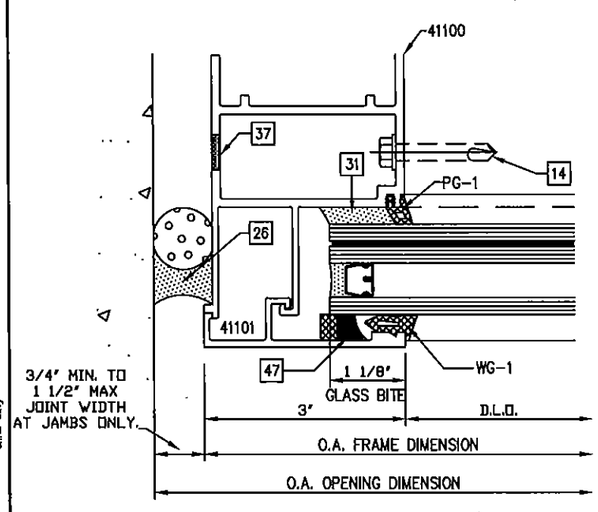


1/16 JAMB DETAIL
1 3/8" CAPTURED GLASS OPTION (⌀ HEAD RAIL)

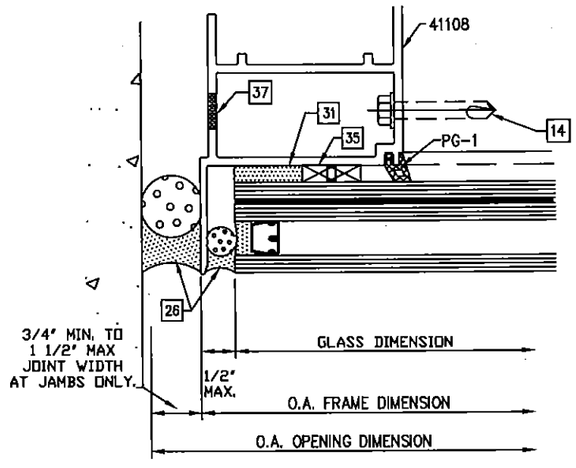


1/16 JAMB DETAIL
1 3/8" STRUCTURALLY GLAZED GLASS OPTION (⌀ HEAD RAIL)

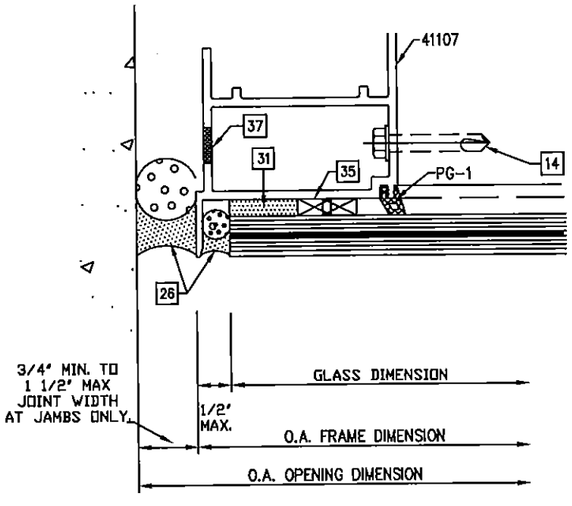


1/16 JAMB DETAIL
9/16" STRUCTURALLY GLAZED GLASS OPTION (⌀ HEAD RAIL)

FOR MIAMI-DADE CO. B.C.C.O.

PRODUCT REVISED
as complying with the Florida Building Code
Acceptance No 15-0603.19
Expiration Date June 3, 2019
By Manuel Perez
Miami-Dade Product Control

enclos corp
2770 Blue Water Road
Eagan, MN 55121-1400
Tel. 651-796-6100 • Fax 651-994-6360
Engineering Locations
Eagan, MN • Montreal, QC, CA • Moncton, NB, CA
St. Louis, MO • Manila, PH

REVISIONS

WILLIAM D. COOK LICENSE No 43904 MAR 31 2015 STATE OF FLORIDA PROFESSIONAL ENGINEER
Reviewed For Structural Integrity Only.

BROMLEY · COOK ENGINEERING
STRUCTURAL ENGINEERING SERVICES
5440 N.W. 33RD AVENUE SUITE 150
FORT LAUDERDALE, FLORIDA 33309
TEL: (954) 772-4624 FAX: (954) 772-4629
CERT. OF AUTH. #00009124
WILLIAM D. COOK P.E.
FLA P.E. # 43904
FLA S.I. # 2008

| Date | Scale |
|---|---|
| 4/17/14 | |

Drawing No.
7030TSSMI

Drawing Title
7030 SERIES CURTAIN WALL
TWIN SPAN
SMALL MISSILE IMPACT

Sheet No.
16/31

chris davy
08/15/2015

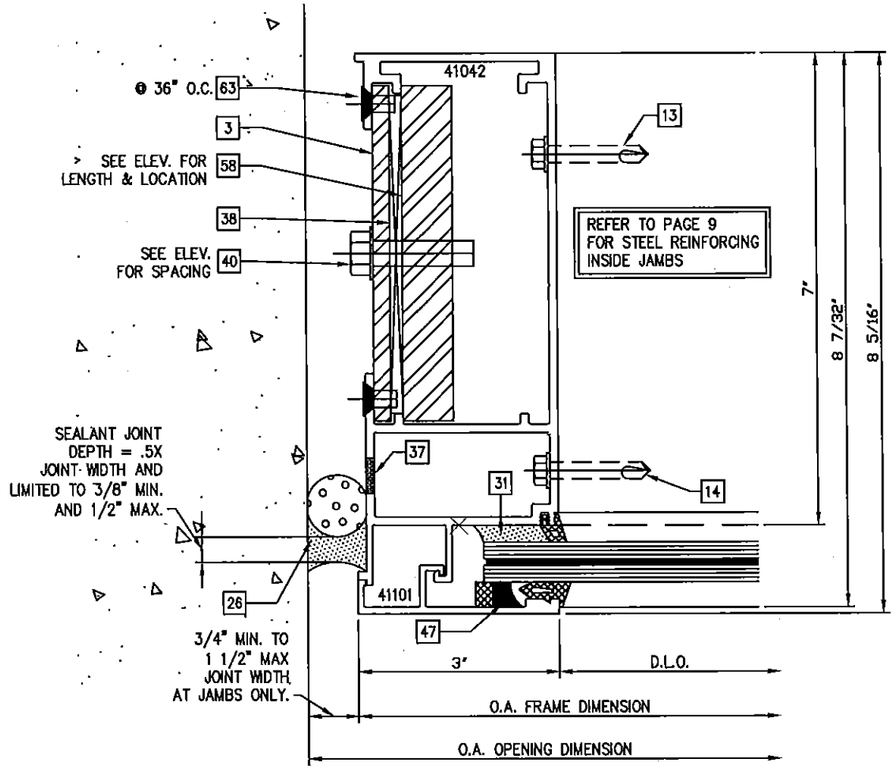


REFER TO PAGE 26 FOR ALLOWABLE ANCHOR TYPES & SUBSTRATES

PERIMETER SEALANT OPTIONS:
DOW-CORNING 790 SILICONE
DOW-CORNING 791 SILICONE
DOW-CORNING 795 SILICONE

ALTERNATE PERIMETER SEALANT TYPES AND JOINT SIZES SHALL BE DESIGNED AND APPROVED BY DESIGN PROFESSIONAL OF RECORD AND OR THE SEALANT MANUFACTURER

1/17 JAMB DETAIL
9/16" CAPTURED GLASS

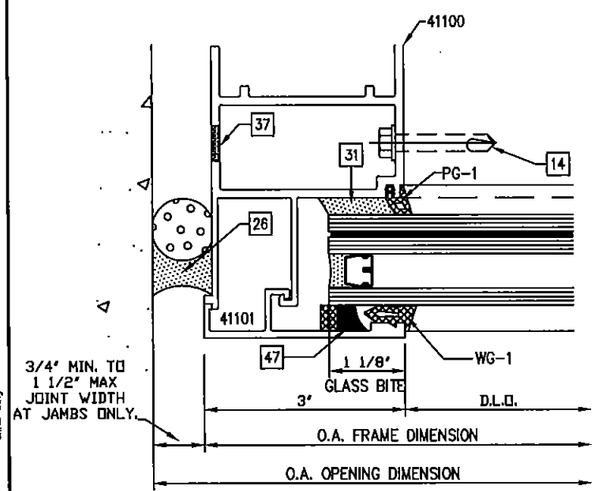


1/17 JAMB DETAIL
1 3/8" CAPTURED GLASS OPTION

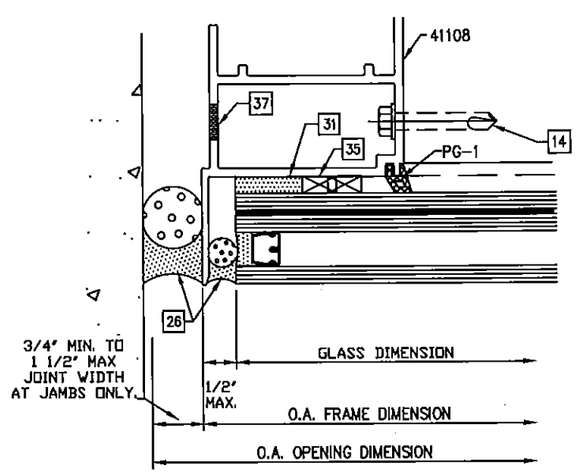


1/17 JAMB DETAIL
1 3/8" STRUCTURALLY GLAZED GLASS OPTION

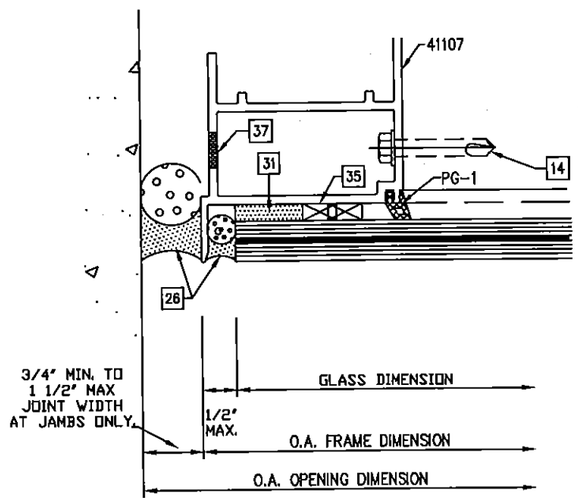


1/17 JAMB DETAIL
9/16" STRUCTURALLY GLAZED GLASS OPTION

FOR MIAMI-DADE CO. B.C.C.O.

PRODUCT REVISED
as complying with the Florida Building Code
Acceptance No 15-0603.19
Expiration Date June 3, 2019
By Manuel Perez
Miami Dade Product Control

enclos corp
2770 Blue Water Road
Eagan, MN 55121-1400
Tel. 651-796-6100 • Fax 651-994-6380
Engineering Locations
Eagan, MN • Montreal, QC, CA • Moncton, NB, CA
St. Louis, MO • Manila, PH

REVISIONS

WILLIAM D. COOK LICENSE No. 43904 STATE OF FLORIDA PROFESSIONAL ENGINEER
MAR 31 2015
Reviewed for Structural Integrity Only

BROMLEY - COOK ENGINEERING, INC.
STRUCTURAL ENGINEERING SERVICES
5440 N.W. 33RD AVENUE SUITE 100
FORT LAUDERDALE, FLORIDA 33309
TEL: (954) 772-4624 FAX: (954) 772-4634
CERT. OF AUTH. #00009124
WILLIAM D. COOK P.E.
FLA P.E. # 43904
FLA S.I. # 2008

| Date | Scale |
|---|---|
| 4/17/14 | |

Drawing No.
7030TSSMI

Drawing Title
7030 SERIES CURTAIN WALL
THIN SPAN
SMALL MISSILE IMPACT

Sheet No.
17/31

chris davy
08/18/2015

NOTE:
SEE SHEET 20 FOR STRUCTURALLY GLAZED GLASS DETAILS

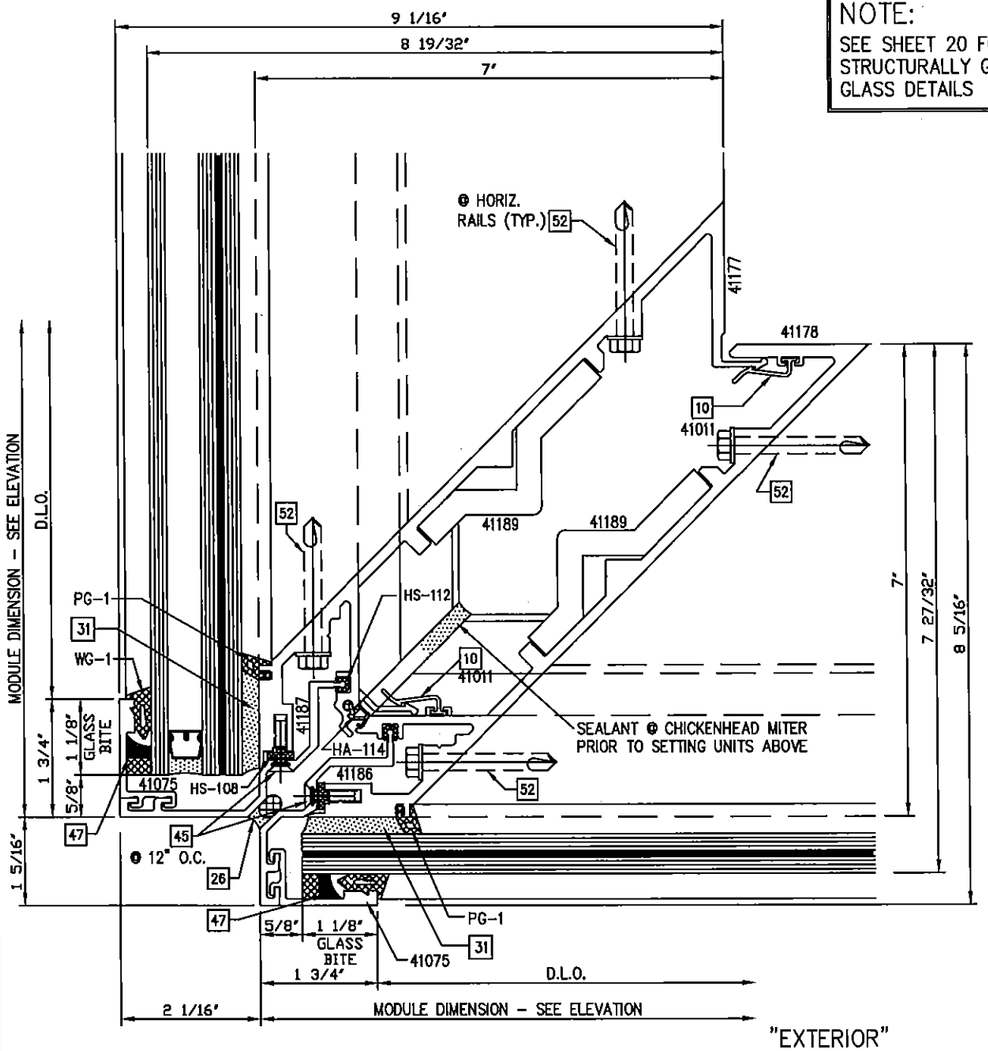


1/18 CORNER MULLION DETAIL @ STACK JOINT
9/16" & 1 3/8" CAPTURED GLASS OPTIONS

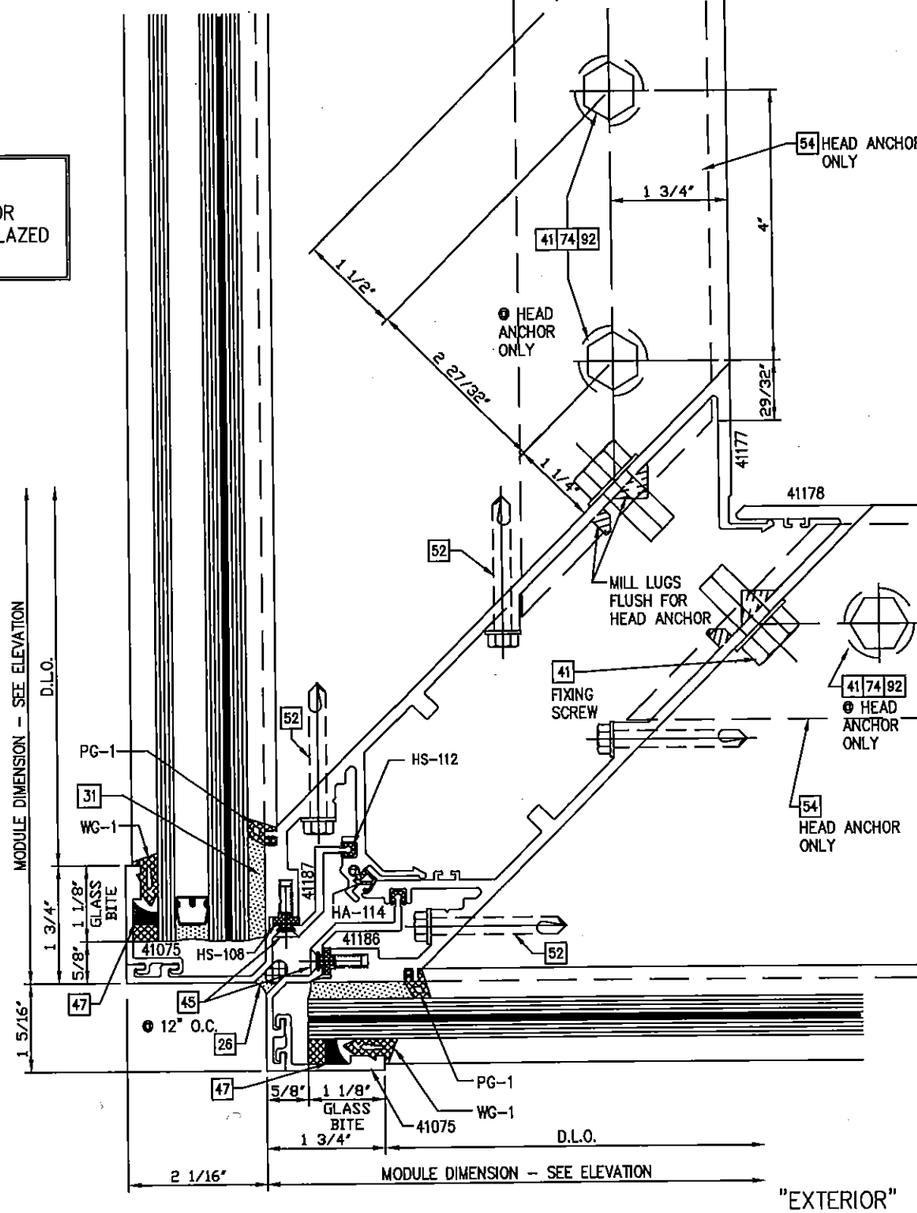


2/18 CORNER MULLION DETAIL @ HEAD RAIL
9/16" & 1 3/8" CAPTURED GLASS OPTIONS

FOR MIAMI–DADE CO. B.C.C.O.

PRODUCT REVISED
as complying with the Florida Building Code
Acceptance No 15.0603.19
Expiration Date June 3, 2019
By Manuel Perez
Miami Dade Product Control


enclos corp

2770 Blue Water Road
Eagan, MN 55121-1400
Tel. 651-796-6100 • Fax 651-994-6360

Engineering Locations
Eagan, MN • Montreal, QC, CA • Moncton, NB, CA
St. Louis, MO • Manila, PH


REVISIONS

WILLIAM D. COOK LICENSE No 43904 STATE OF FLORIDA PROFESSIONAL ENGINEER
MAR 31 2015
Reviewed For Structural Integrity Only


BROMLEY - COOK ENGINEERING
STRUCTURAL ENGINEERING SERVICES
5440 N.W. 33RD AVENUE SUITE 101
FORT LAUDERDALE, FLORIDA 33309
TEL: (954) 772-4624 FAX: (954) 772-4627
CERT. OF AUTH. #00009124
WILLIAM D. COOK P.E.
FLA P.E. # 43904
FLA S.I. # 2008


| Date | Scale |
|---|---|
| 4/17/14 | |

Drawing No.
7030TSSMI

Drawing Title
7030 SERIES CURTAIN WALL
TWIN SPAN
SMALL MISSILE IMPACT

Sheet No.
18/31

05/18/2015 chris deny

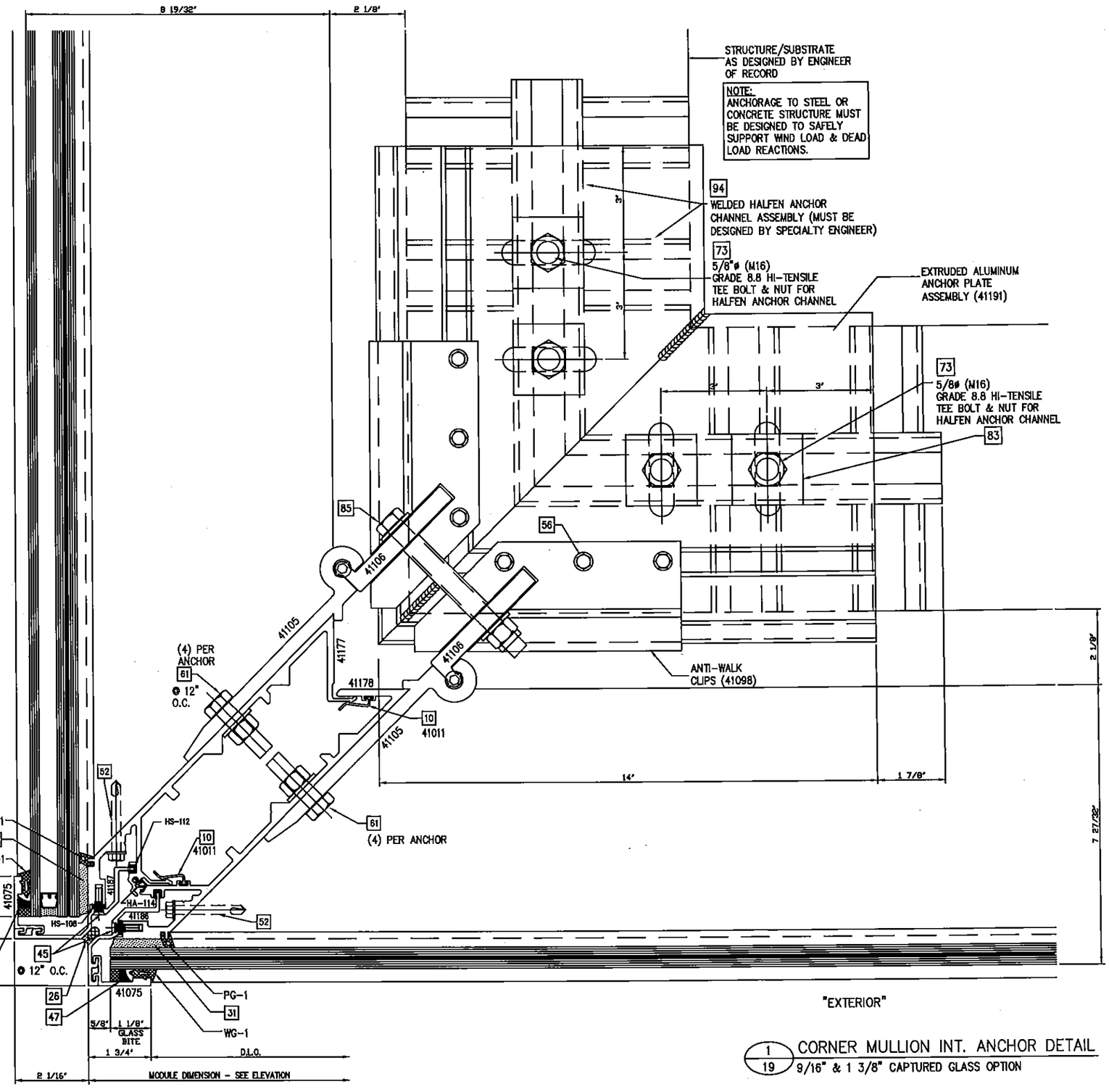


1/19 CORNER MULLION INT. ANCHOR DETAIL
9/16" & 1 3/8" CAPTURED GLASS OPTION

NOTE:
SEE SHEET 20 FOR STRUCTURALLY GLAZED GLASS DETAILS

FOR MIAMI-DADE CO. B.C.C.O.

PRODUCT REVISED
as complying with the Florida Building Code
Acceptance No 15-0603.19
Expiration Date June 3, 2019
By Manuel Perez
Miami-Dade Product Control

enclos corp
2770 Blue Water Road
Eagan, MN 55121-1400
Tel. 651-796-6100 • Fax 651-994-6360
Engineering Locations
Eagan, MN • Montreal, QC, CA • Moncton, NB, CA
St. Louis, MO • Manila, PH

REVISIONS

WILLIAM D. COOK LICENSE No 43904 MAR 31 2015 STATE OF FLORIDA PROFESSIONAL ENGINEER
Reviewed For Structural Integrity Only.

BROMLEY - COOK ENGINEERING, LTD.
STRUCTURAL ENGINEERING SERVICES
5440 N.W. 33RD AVENUE SUITE 105
FORT LAUDERDALE, FLORIDA 33309
TEL: (954) 772-4624 FAX: (954) 772-4625
CERT. OF AUTH. #00005124
WILLIAM D. COOK P.E.
FLA P.E. # 43904
FLA S.I. # 2008

Date 4/17/14
Scale

Drawing No. 7030TSSMI

Drawing Title
7030 SERIES CURTAIN WALL
TWIN SPAN
SMALL MISSILE IMPACT

Sheet No. 19/31

chris dovy
08/18/2015

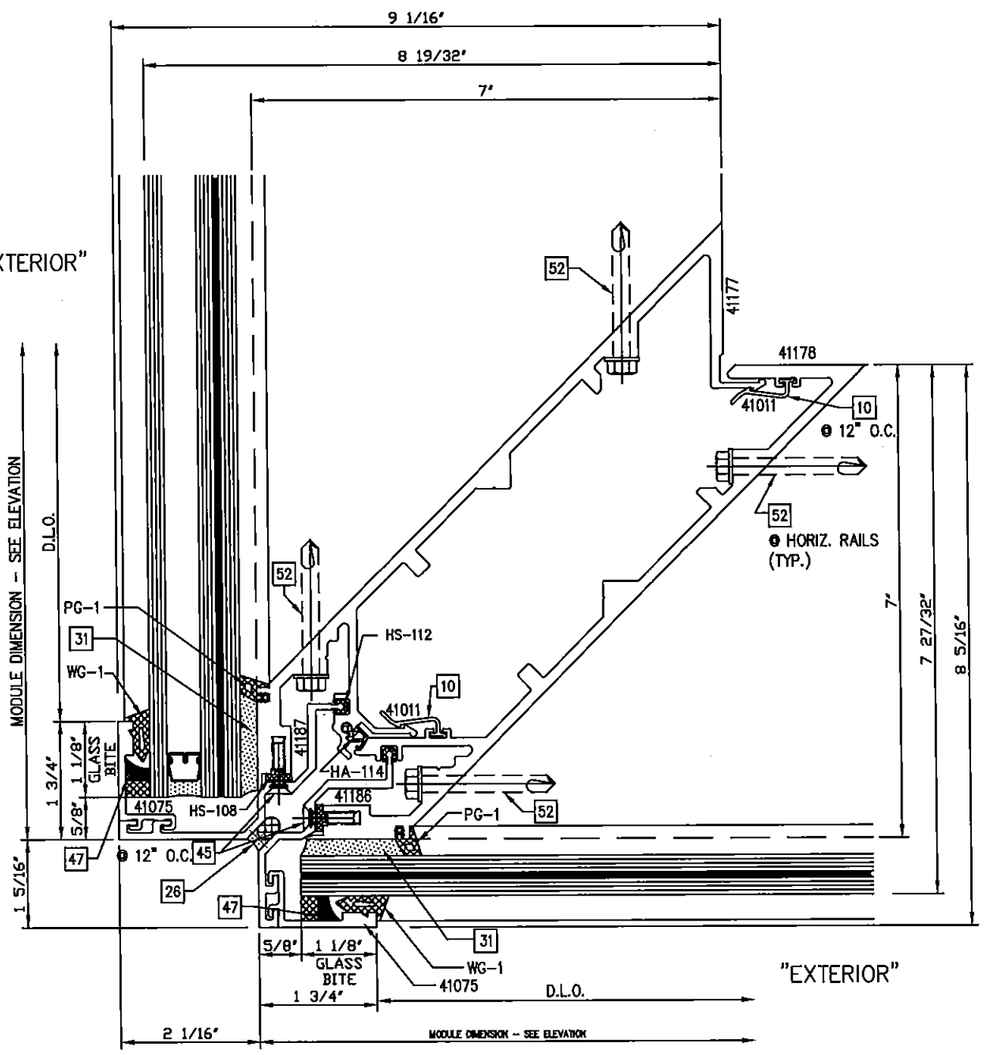


1/20 CORNER MULLION DETAIL @ SILL
9/16" & 1 3/8" CAPTURED GLASS OPTIONS

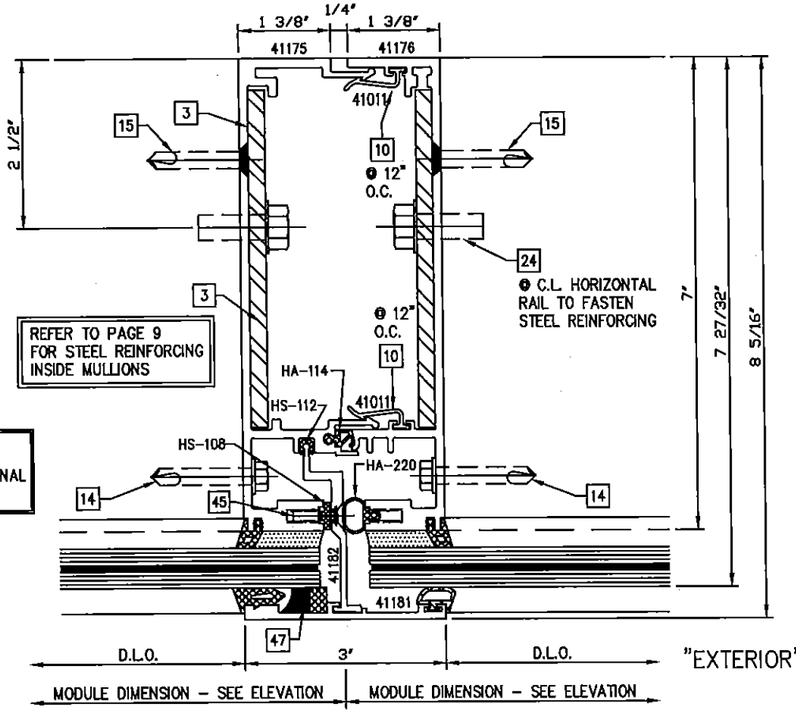


NOTE:
SEE SHEET 21 FOR OPTIONAL GLAZING DETAILS

2/20 TYPICAL MULLION DETAIL
9/16" CAPTURED GLASS

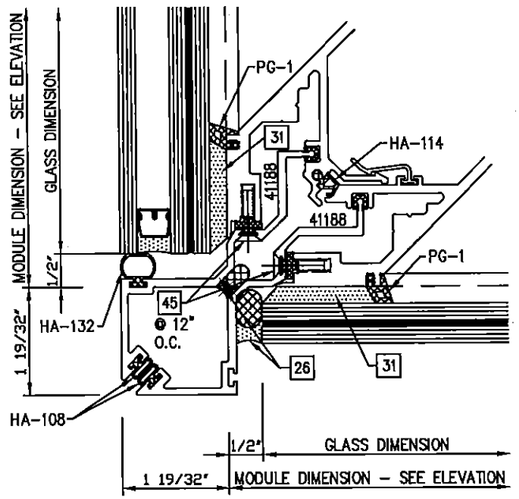


1/20 CORNER MULLION DETAIL
9/16" & 1 3/8" STRUCTURALLY GLAZED GLASS OPTIONS

FOR MIAMI-DADE CO. B.C.C.O.

PRODUCT REVISED
as complying with the Florida
Building Code
Acceptance No 15-0603.19
Expiration Date June 3, 2019
By Manuel Perez
Miami-Dade Product Control

enclos corp
2770 Blue Water Road
Eagan, MN 55121-1400
Tel. 651-796-6100 • Fax 651-994-6360
Engineering Locations
Eagan, MN • Montreal, QC, CA • Moncton, NB, CA
St. Louis, MO • Manila, PH

REVISIONS

WILLIAM D. COOK LICENSE No 43904 STATE OF FLORIDA PROFESSIONAL ENGINEER
MAR 3 1 2015
Reviewed For Structural Integrity Only

BROMLEY - COOK ENGINEERING, INC.
STRUCTURAL ENGINEERING SERVICES
5440 N.W. 33RD AVENUE SUITE 101
FORT LAUDERDALE, FLORIDA 33309
TEL: (954) 772-4624 FAX: (954) 772-4635
CERT. OF AUTH. #00009124
WILLIAM D. COOK P.E.
FLA P.E. # 43904
FLA S.I. # 2008

| Date | Scale |
|---|---|
| 4/17/14 | |

Drawing No.
7030TSSMI

Drawing Title
7030 SERIES CURTAIN WALL
TWIN SPAN
SMALL MISSILE IMPACT

Sheet No.
20/31

chris devy
08/18/2015

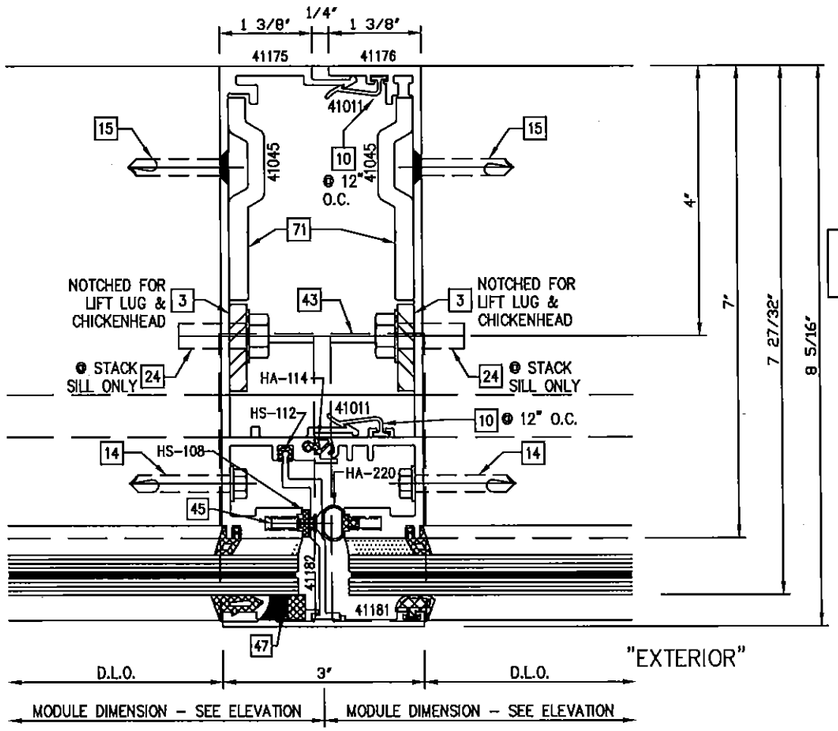


1/21 TYPICAL MULLION DETAIL AT CHICKENHEAD
9/16" CAPTURED GLASS

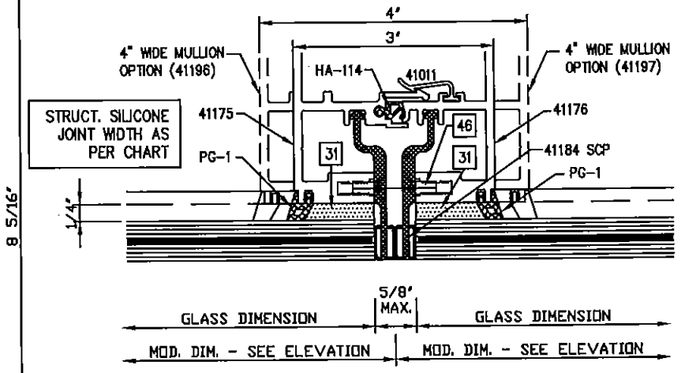


1/21 TYPICAL MULLION DETAIL
9/16" STRUCTURAL GLAZED GLASS OPTION WITH GASKETED BUTT JOINT

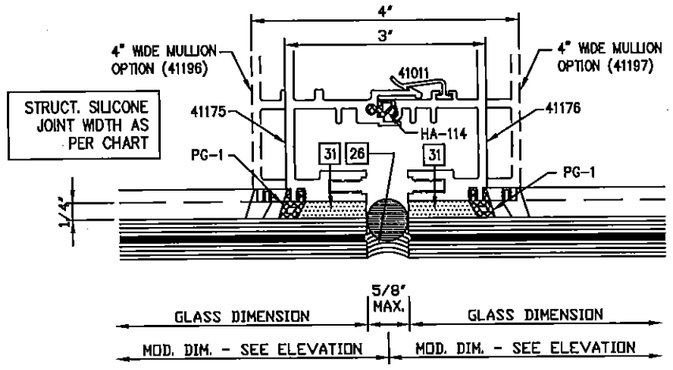


1/21 TYPICAL MULLION DETAIL
9/16" STRUCTURAL GLAZED GLASS OPTION WITH SILICONE BUTT JOINT

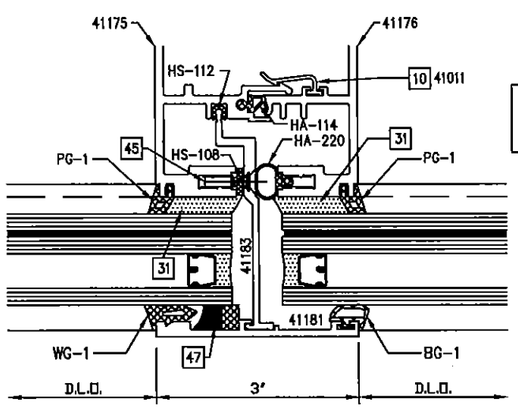


1/21 TYPICAL MULLION DETAIL
1 3/8" CAPTURED GLASS OPTION

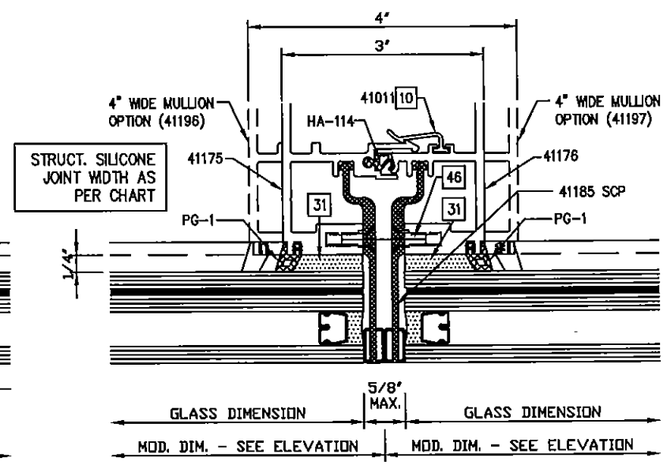


1/21 TYPICAL MULLION DETAIL
1 3/8" STRUCTURAL GLAZED GLASS OPTION WITH GASKETED BUTT JOINT

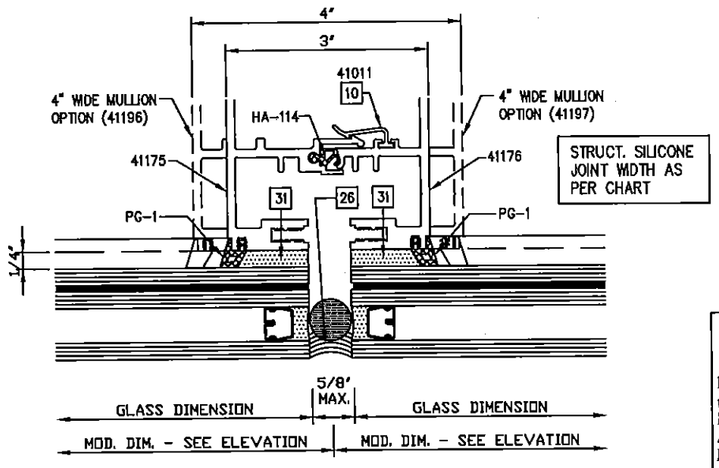


1/21 TYPICAL MULLION DETAIL
1 3/8" STRUCTURAL GLAZED GLASS OPTION WITH SILICONE BUTT JOINT

FOR MIAMI-DADE CO. B.C.C.O.

PRODUCT REVISED
as complying with the Florida Building Code
Acceptance No 15-0603.19
Expiration Date June 3, 2019
By Manuel Perez
Miami-Dade Product Control


enclos corp
2770 Blue Water Road
Eagan, MN 55121-1400
Tel. 651-796-6100 • Fax 651-994-6960
Engineering Locations
Eagan, MN • Montreal, QC, CA • Moncton, NB, CA
St. Louis, MO • Manila, PH


REVISIONS

WILLIAM D. COOK LICENSE No 43904 STATE OF FLORIDA PROFESSIONAL ENGINEER
MAR 2 of 2015
Revised for Structural Integrity Only


BROMLEY - COOK ENGINEERING, INC.
STRUCTURAL ENGINEERING SERVICES
5440 N.W. 33RD AVENUE SUITE 100
FORT LAUDERDALE, FLORIDA 33309
TEL: (954) 772-4624 FAX: (954) 772-4635
CERT. OF AUTH. #00009124
WILLIAM D. COOK P.E.
FLA P.E. # 43904
FLA S.I. # 2008


| Date | Scale |
|---|---|
| 4/17/14 | |

Drawing No.
7030TSSMI

Drawing Title
7030 SERIES CURTAIN WALL
TWIN SPAN
SMALL MISSILE IMPACT

Sheet No.
21/31

06/18/2015 circle davy

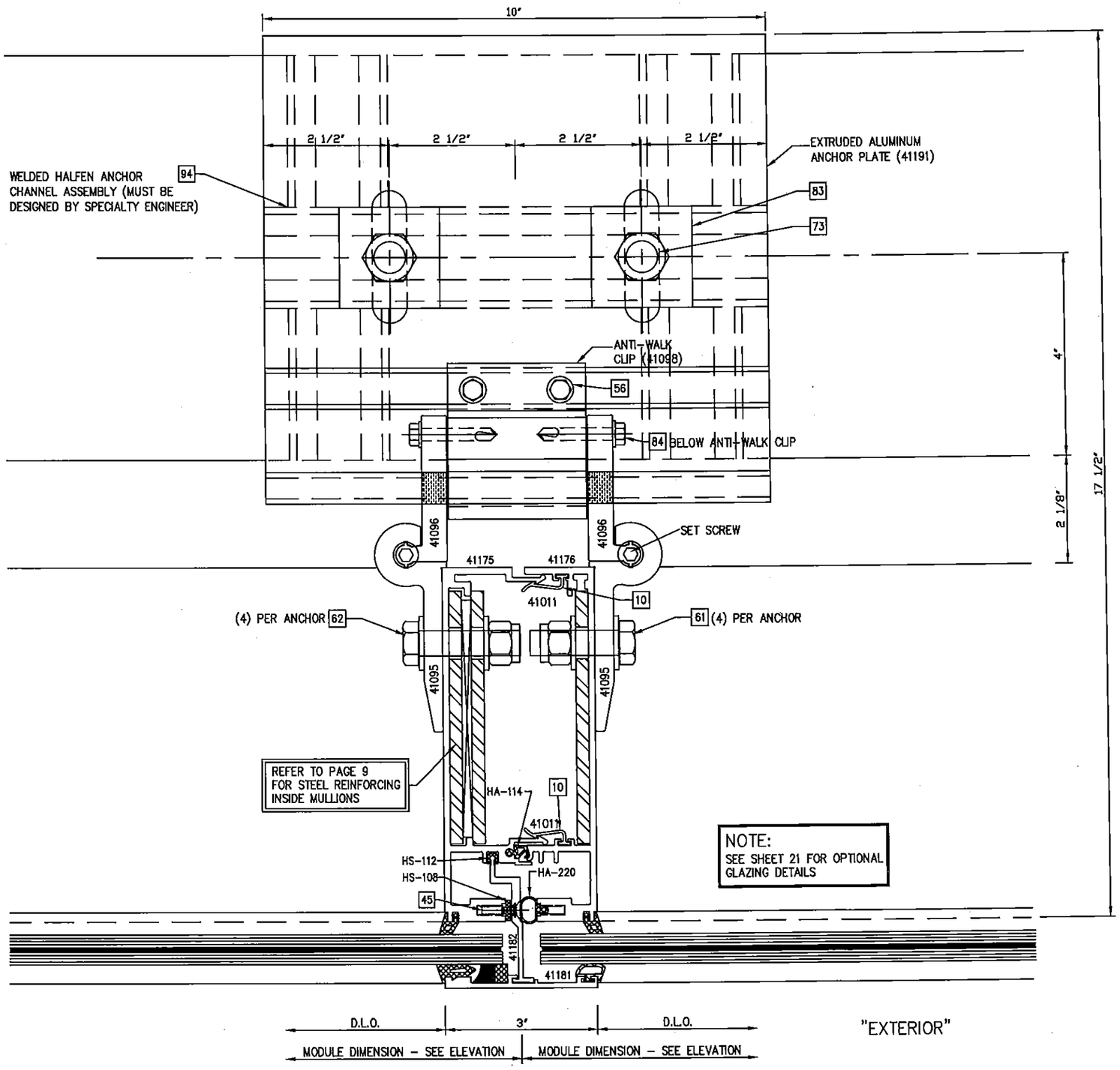


1/22 TYPICAL MULLION DETAIL AT INT. ANCHOR
9/16" CAPTURED GLASS

FOR MIAMI-DADE CO. B.C.C.O.

PRODUCT REVISED
as complying with the Florida Building Code
Acceptance No 15-0603.19
Expiration Date June 3, 2019
By Manuel Perez
Miami Dade Product Control


enclos corp

2770 Blue Water Road
Eagan, MN 55121-1400
Tel 651-796-6100 • Fax 651-994-6360

Engineering Locations
Eagan, MN • Montreal, QC, CA • Moncton, NB, CA
St. Louis, MO • Manila, PH


REVISIONS

WILLIAM D. COOK LICENSE No 43904 STATE OF FLORIDA PROFESSIONAL ENGINEER
MAR 3 1 2014
Approved For Structural Integrity Only


BROMLEY · COOK ENGINEERING GROUP
STRUCTURAL ENGINEERING SERVICES
5440 N.W. 33RD AVENUE SUITE 210
FORT LAUDERDALE, FLORIDA 33309
TEL: (954) 772-4624 FAX: (954) 772-4625
CERT. OF AUTH. #00009124
WILLIAM D. COOK P.E.
FLA P.E. # 43904
FLA S.I. # 2008


| Date | Scale |
|---|---|
| 4/17/14 | |

Drawing No.
7030TSSMI

Drawing Title
7030 SERIES CURTAIN WALL
TWIN SPAN
SMALL MISSILE IMPACT

Sheet No.
22/31

chris davy
08/18/2015

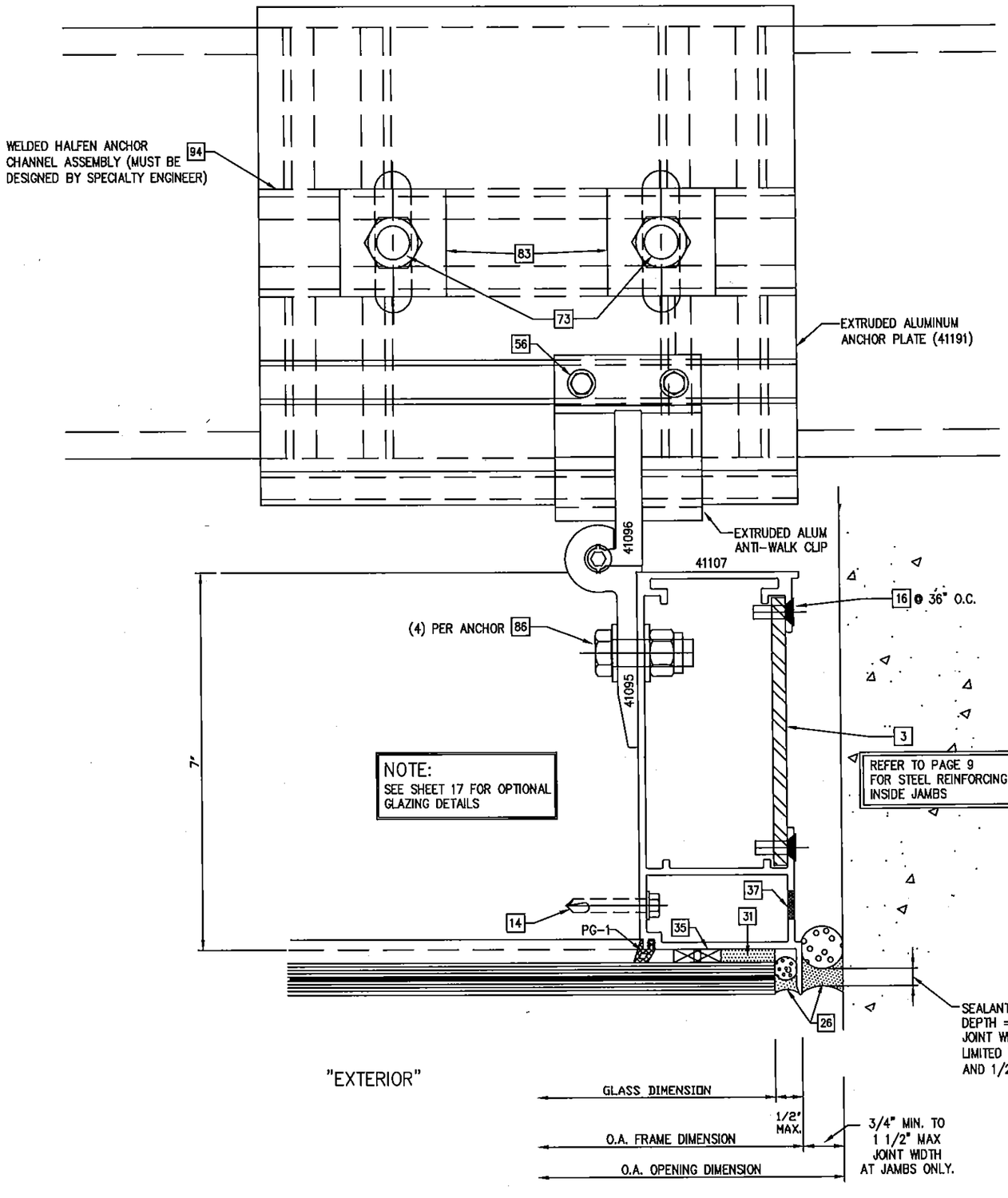


ALTERNATE PERIMETER SEALANT TYPES AND JOINT SIZES SHALL BE DESIGNED AND APPROVED BY DESIGN PROFESSIONAL OF RECORD AND OR THE SEALANT MANUFACTURER

PERIMETER SEALANT OPTIONS:
DOW-CORNING 790 SILICONE
DOW-CORNING 791 SILICONE
DOW-CORNING 795 SILICONE

1/23 TYPICAL JAMB DETAIL AT INT. ANCHOR
9/16" STRUCTURALLY GLAZED GLASS OPTION

FOR MIAMI-DADE CO. B.C.C.O.

PRODUCT REVISED
as complying with the Florida Building Code
Acceptance No 15.0603.19
Expiration Date June 5, 2019
By Manuel Perez
Miami Dade Product Control


enclos corp

2770 Blue Water Road
Eagan, MN 55121-1400
Tel. 651-796-6100 • Fax 651-994-6360
Engineering Locations
Eagan, MN • Montreal, QC, CA • Moncton, NB, CA
St. Louis, MO • Manila, PH


REVISIONS

WILLIAM D. COOK LICENSE No 43904 STATE OF FLORIDA PROFESSIONAL ENGINEER
MAR 3 1 20
Reviewed For Structural Integrity Only


BROMLEY - COOK ENGINEERING, INC.
STRUCTURAL ENGINEERING SERVICES
5440 N.W. 33RD AVENUE SUITE 105
FORT LAUDERDALE, FLORIDA 33309
TEL: (954) 772-4624 FAX: (954) 772-9124
CERT. OF AUTH. #00009124
WILLIAM D. COOK P.E.
FLA P.E. # 43904
FLA S.I. # 2008


| Date | Scale |
|---|---|
| 4/17/14 | |

Drawing No.
7030TSSMI

Drawing Title
7030 SERIES CURTAIN WALL
TWN SPAN
SMALL MISSILE IMPACT

Sheet No.
23/31

chris davy
05/19/2013

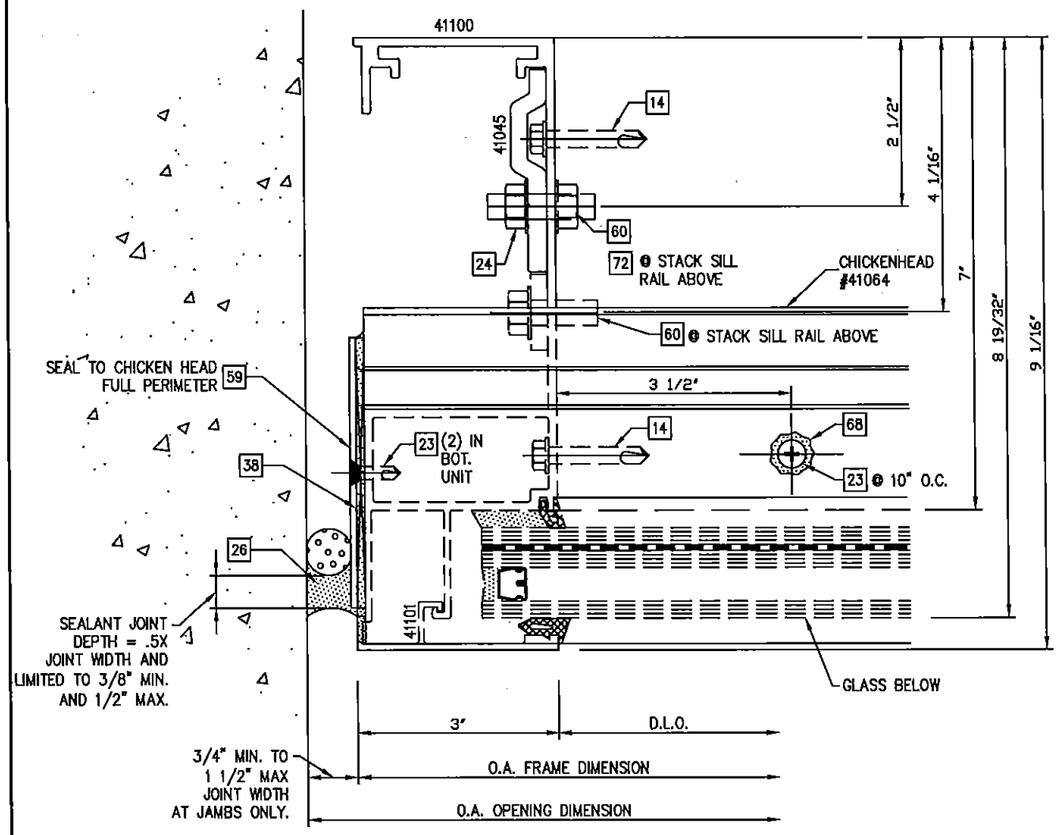


1/24 TYPICAL JAMB DETAIL AT END DAM

1 3/8" CAPTURED GLASS OPTION

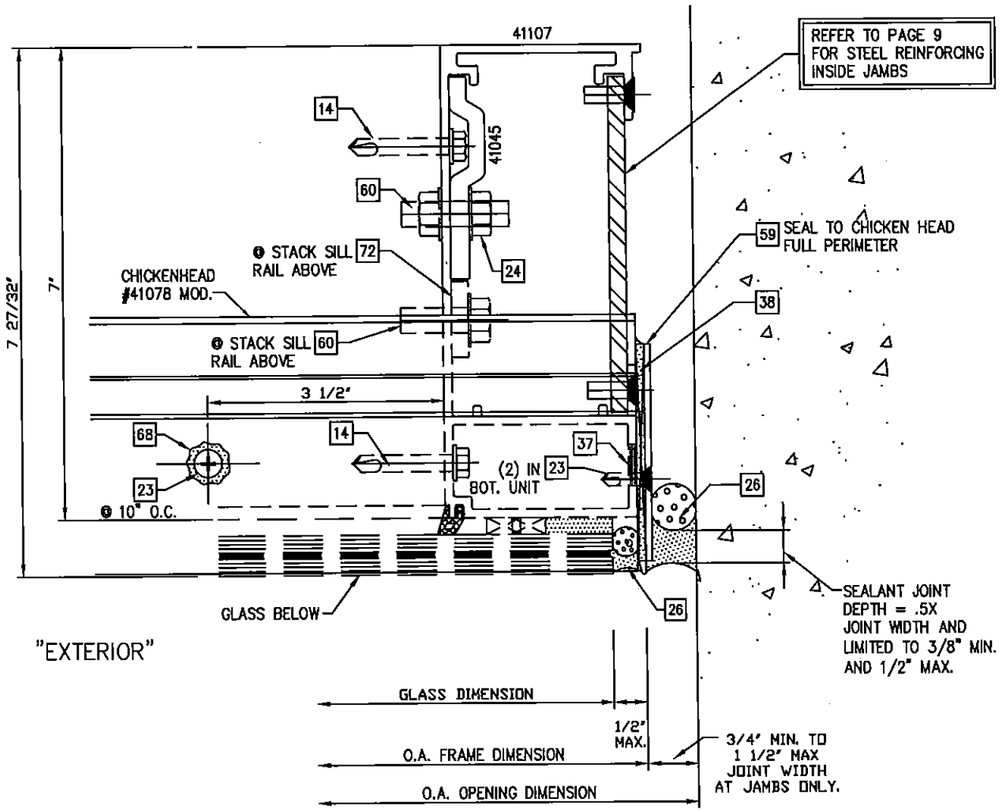


2/24 TYPICAL JAMB DETAIL AT END DAM

9/16" STRUCTURALLY GLAZED GLASS OPTION

NOTE:
SEE SHEET 17 FOR OPTIONAL GLAZING DETAILS

ALTERNATE PERIMETER SEALANT TYPES AND JOINT SIZES SHALL BE DESIGNED AND APPROVED BY DESIGN PROFESSIONAL OF RECORD AND OR THE SEALANT MANUFACTURER

PERIMETER SEALANT OPTIONS:
DOW-CORNING 790 SILICONE
DOW-CORNING 791 SILICONE
DOW-CORNING 795 SILICONE

FOR MIAMI-DADE CO. B.C.C.O.

PRODUCT REVISED
as complying with the Florida Building Code
Acceptance No 15-0603.19
Expiration Date June 3, 2019
By Manuel Perez
Miami-Dade Product Control


enclos corp
2770 Blue Water Road
Eagan, MN 55121-1400
Tel. 651-796-6100 • Fax 651-994-6360
Engineering Locations
Eagan, MN • Montreal, QC, CA • Moncton, NB, CA
St. Louis, MO • Manila, PH


REVISIONS

WILLIAM D. COOK LICENSE No. 43904 STATE OF FLORIDA PROFESSIONAL ENGINEER MAR 31 2015 Registered For Structural Integrity Only


BROMLEY - COOK ENGINEERING, INC.
STRUCTURAL ENGINEERING SERVICES
5440 N.W. 33RD AVENUE SUITE 400
FORT LAUDERDALE, FLORIDA 33309
TEL: (954) 772-4624 FAX: (954) 772-4634
CERT. OF AUTH. #00009124
WILLIAM D. COOK P.E.
FLA P.E. # 43904
FLA S.I. # 2008


| Date | Scale |
|---|---|
| 4/17/14 | |

Drawing No.
7030TSSMI

Drawing Title
7030 SERIES CURTAIN WALL
TWIN SPAN
SMALL MISSILE IMPACT

Sheet No.
24/31

chris davy
05/18/2015

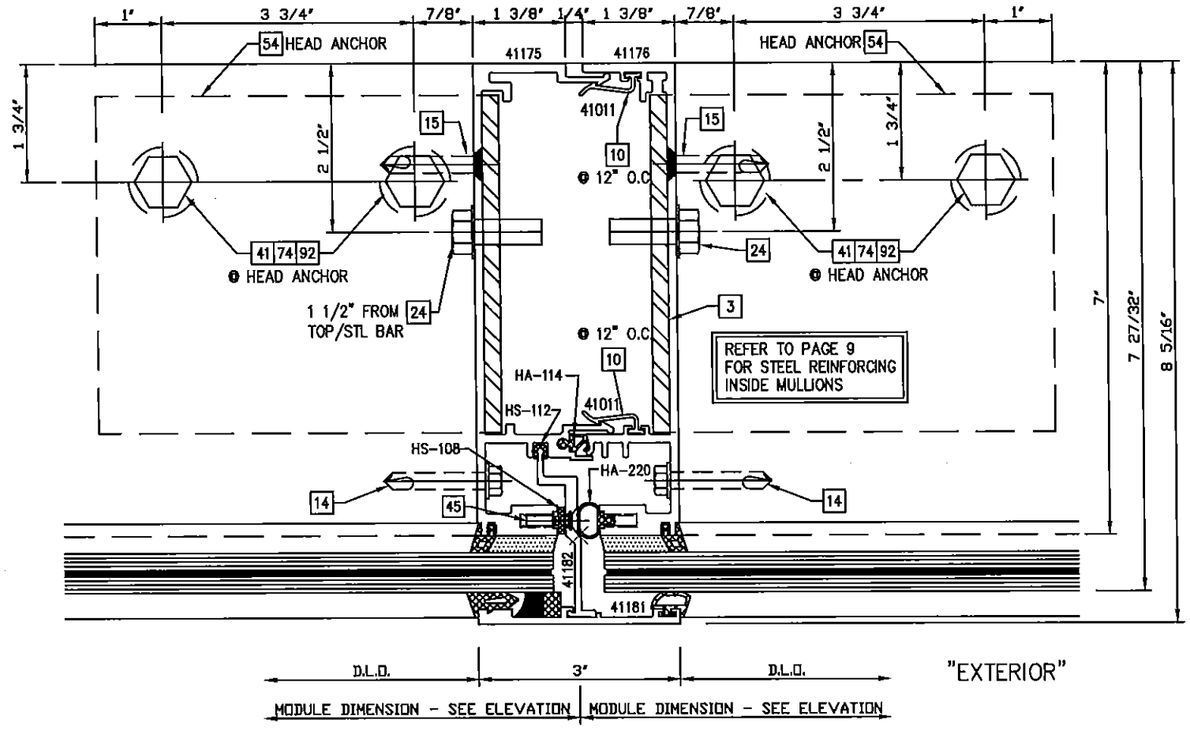


"EXTERIOR"

NOTE:
SEE SHEET 21 FOR OPTIONAL GLAZING DETAILS

1/25 TYPICAL MULLION DETAIL AT HEAD ANCHOR
9/16" CAPTURED GLASS

FOR MIAMI-DADE CO. B.C.C.O.

PRODUCT REVISED
as complying with the Florida
Building Code
Acceptance No 15-060319
Expiration Date June 3, 2019
By
Miami Dade Product Control


enclos corp

2770 Blue Water Road
Eagan, MN 55121-1400
Tel. 651-796-6100 • Fax 651-994-6360

Engineering Locations
Eagan, MN • Montreal, QC, CA • Moncton, NB, CA
St. Louis, MO • Manila, PH


REVISIONS

WILLIAM D. COOK SEAL LICENSE No. 43904 STATE OF FLORIDA MAY 31 2015 PROFESSIONAL ENGINEER
Reviewed For Structural Integrity Only


BROMLEY · COOK ENGINEERING GROUP, INC.
STRUCTURAL ENGINEERING SERVICES
5440 N.W. 33RD AVENUE SUITE 230
FORT LAUDERDALE, FLORIDA 33309
TEL: (954) 772-4624 FAX: (954) 772-4634
CERT. OF AUTH. #00009124
WILLIAM D. COOK P.E.
FLA P.E. # 43904
FLA S.I. # 2008


| Date | Scale |
|---|---|
| 4/17/14 | |

Drawing No.
7030TSSMI

Drawing Title
7030 SERIES CURTAIN WALL
TWIN SPAN
SMALL MISSILE IMPACT

Sheet No.
25/31

chris davy
08/18/2015

## MAX. DESIGN PRESSURES (P.S.F.) FOR VARIOUS ANCHOR OPTIONS

| MODULE WD. D.L.O. | MULLION HGT. | ANCHOR OPTIONS | | | |
|---|---|---|---|---|---|
| | | ANCHOR TYPE "H1" | ANCHOR TYPE "S1" | ANCHOR TYPE "H2" | |
| 42" 48" 52" 54" 57" | 98" | +110, −130 | +110, −130 | +110, −130 | |
| 42" 48" 52" 54" 57" | 114" | | | | |
| 42" 48" 52" 54" 57" | 120" | | | | |
| 42" 48" 52" 54" 57" | 132" | | | | |
| 48" 52" 54" 57" | 144" | | | | |
| 42" 48" 52" 54" 57" | 161 9/16" | +110, −130 | +110, −130 | +110, −130 | |

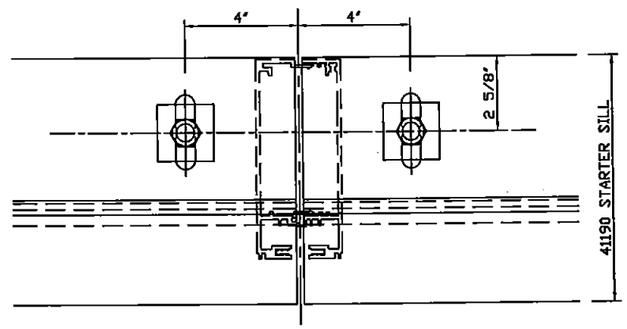


A/26 DETAIL "A"
ANCHOR LAYOUT AT MULLION (PLAN VIEW)

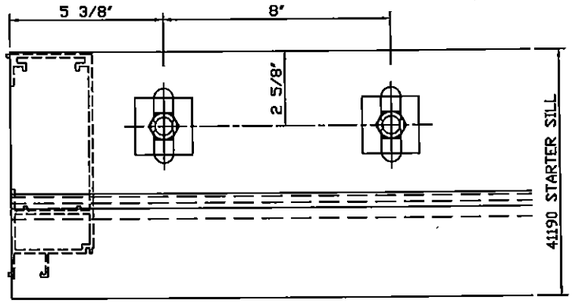


B/26 DETAIL "B"
ANCHOR LAYOUT AT JAMB (PLAN VIEW)

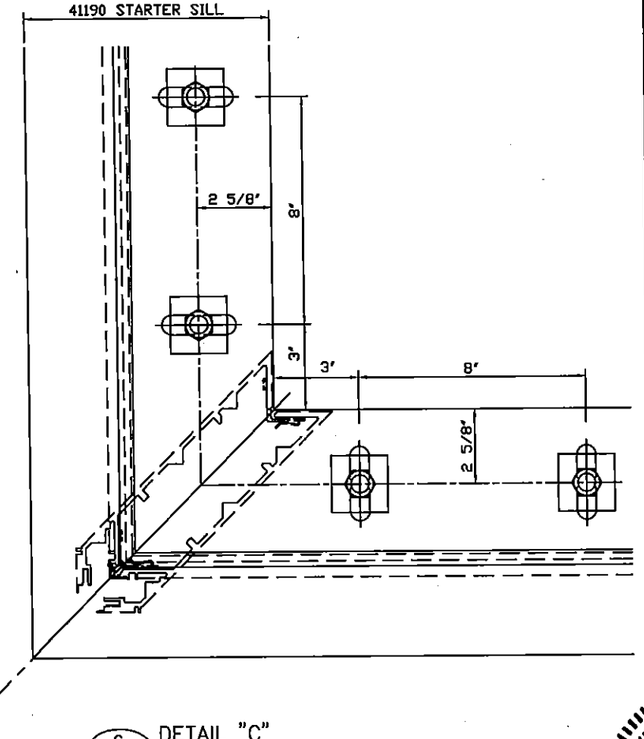


C/26 DETAIL "C"
ANCHOR LAYOUT AT CORNER MULLION (PLAN VIEW)

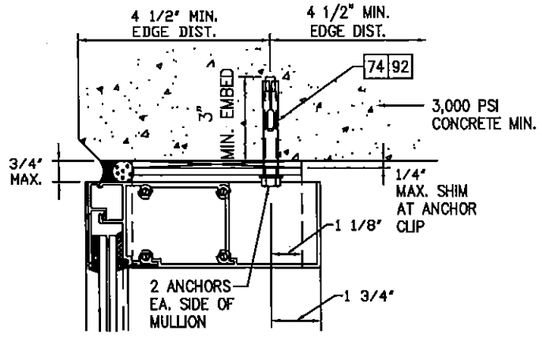


### TYPE H1" –HEAD ANCHOR

STEEL "L" ANCHOR CLIPS W/ (2) 1/2" DIA. POWER BOLTS OR RAWL WEDGE BOLTS INTO CONC. SUBSTRSATE

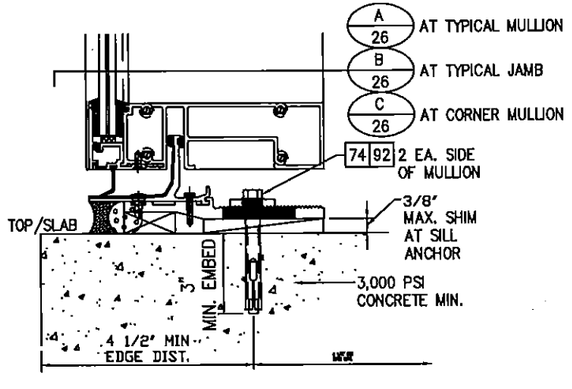


### TYPE "S1" –SILL ANCHOR

EXTRUDED ALUM. ANCHOR PLATE W/ 1/2" DIA. POWER BOLTS OR RAWL WEDGE BOLTS INTO CONC. SUBSTRATE

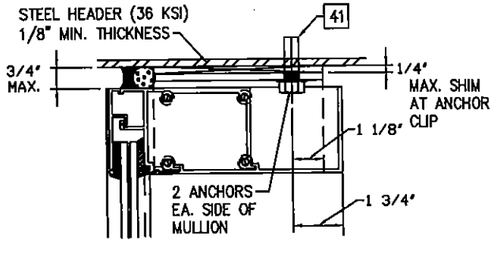


### TYPE "H2" –HEAD ANCHOR

STEEL "L" ANCHOR CLIPS W/ 1/2-13 X 1 1/2" GRADE 5 ZINC PL. H.W.H. TAPTITE SCREWS INTO STEEL SUBSTRATE

FOR MIAMI-DADE CO. B.C.C.O.

PRODUCT REVISED
as complying with the Florida Building Code
Acceptance No 15-0603.19
Expiration Date June 3, 2019
By Manuel Perez
Miami Dade Product Control


enclos corp
2770 Blue Water Road
Eagan, MN 55121-1400
Tel. 651-799-6100 • Fax 651-994-6360
Engineering Locations
Eagan, MN • Montreal, QC, CA • Moncton, NB, CA
St. Louis, MO • Manila, PH


REVISIONS

WILLIAM D. COOK LICENSE No 43904 STATE OF FLORIDA PROFESSIONAL ENGINEER SEAL
MAR 3 1 2015
Reviewed For Structural Integrity Only


BROMLEY · COOK ENGINEERING, INC.
STRUCTURAL ENGINEERING SERVICES
5440 N.W. 33RD AVENUE SUITE 101
FORT LAUDERDALE, FLORIDA 33309
TEL (954) 772-4624 FAX (954) 772-4625
CERT. OF AUTH. #00009124
WILLIAM D. COOK P.E.
FLA P.E. # 43904
FLA S.I. # 2008


| Date | Scale |
|---|---|
| 4/17/14 | |

Drawing No.
7030TSSMI

Drawing Title
7030 SERIES CURTAIN WALL
TWIN SPAN
SMALL MISSILE IMPACT

Sheet No.
26/31

chris devy
08/18/2015

## MAX. DESIGN PRESSURES (P.S.F.) FOR VARIOUS ANCHOR OPTIONS

| MODULE WD. D.L.O. | MULLION HGT. | ANCHOR OPTIONS | | | | |
|---|---|---|---|---|---|---|
| | | ANCHOR TYPE "MID-1" | ANCHOR TYPE "MID-2" | | | |
| 42" 48" 52" 54" 57" | 96" | +110, -130 | +110, -130 | | | |
| 42" 48" 52" 54" 57" | 98" | | | | | |
| 42" 48" 52" 54" 57" | 114" | | | | | |
| 42" 48" 52" 54" 57" | 120" | | | | | |
| 42" 48" 52" 54" 57" | 132" | | | | | |
| 42" 48" 52" 54" 57" | 144" | | | | | |
| 42" 48" 52" 54" 57" | 161 9/16" | +110, -130 | +110, -130 | | | |

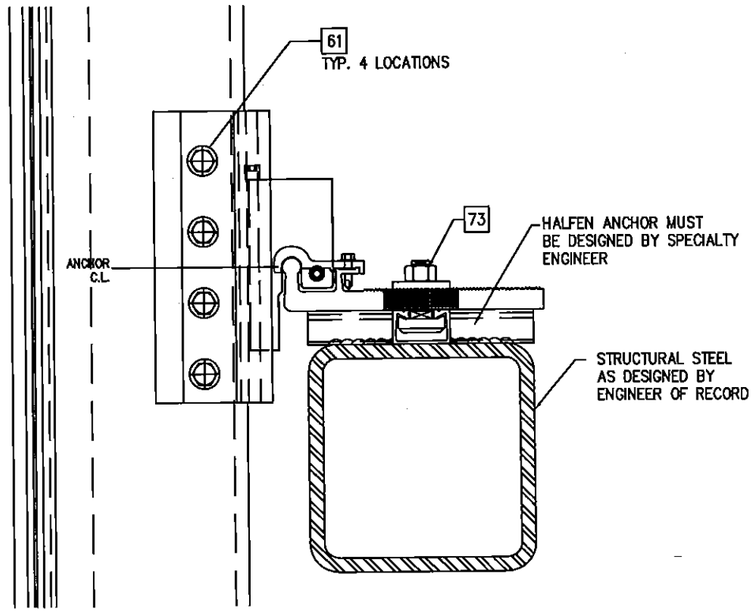


TYPE "MID-1" MID-SPAN ANCHOR

EXTRUDED ALUM. ANCHOR PLATE W/ 5/8"ø (M16) GRADE 8.8
HI TENSILE TEE-BOLT FOR HALFEN 5030HTA ANCHOR CHANNEL

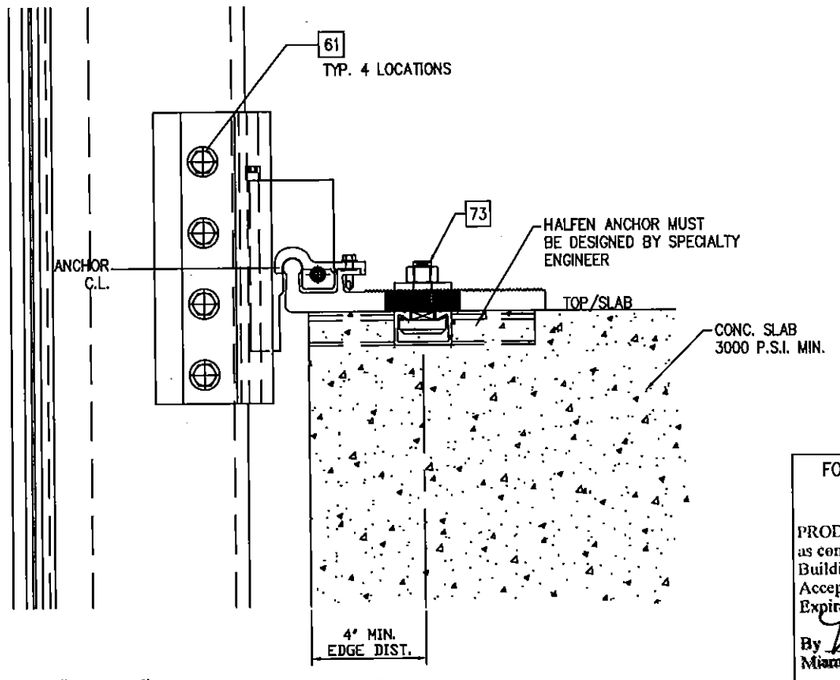


TYPE "MID-2" MID-SPAN ANCHOR

EXTRUDED ALUM. ANCHOR PLATE W/ 5/8"ø (M16) GRADE 8.8
HI TENSILE TEE-BOLT FOR HALFEN 5030HTA ANCHOR CHANNEL

FOR MIAMI-DADE CO. B.C.C.O.

PRODUCT REVISED
as complying with the Florida
Building Code
Acceptance No 15-0603.19
Expiration Date June 3, 2019
By Manuel Perez
Miami-Dade Product Control


enclos corp

2770 Blue Water Road
Eagan, MN 55121-1400
Tel. 651-798-6100 • Fax 651-994-6860

Engineering Locations
Eagan, MN • Montreal, QC, CA • Moncton, NB, CA
St. Louis, MO • Manila, PH


REVISIONS

WILLIAM D. COOK LICENSE No 43904 MAR 31 2015 STATE OF FLORIDA PROFESSIONAL ENGINEER Registered For Structural Integrity Only


BROMLEY - COOK ENGINEERING, INC.
STRUCTURAL ENGINEERING SERVICES
5440 N.W. 33RD AVENUE SUITE 101
FORT LAUDERDALE, FLORIDA 33309
TEL (954) 772-4624 FAX (954) 772-4627
CERT. OF AUTH. #00009124
WILLIAM D. COOK P.E.
FLA P.E. # 43904
FLA S.I. # 2008


| Date | Scale |
|---|---|
| 4/17/14 | |

Drawing No.
7030TSSMI

Drawing Title
7030 SERIES CURTAIN WALL
TWIN SPAN
SMALL MISSILE IMPACT

Sheet No.
27/31

08/18/2015 chris dow

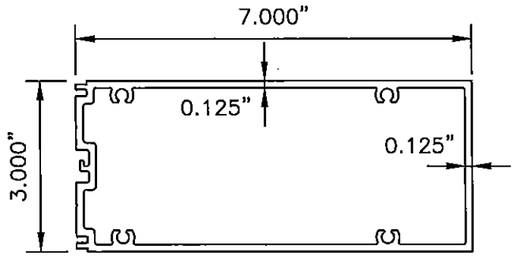


41048
(3" INTERMEDIATE HORIZONTAL)

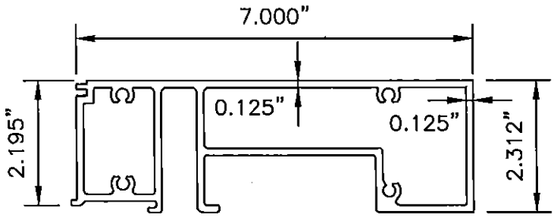


41058
(HORIZONTAL STACK– UPPER)

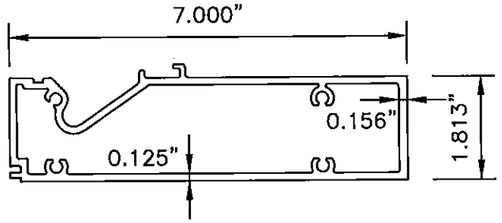


41059
(HORIZONTAL STACK– LOWER)

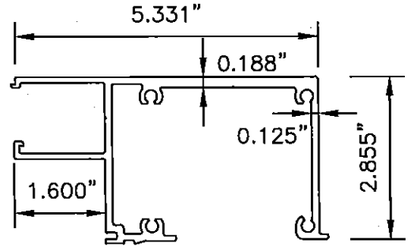


41140
(FRAME HEAD – 1 3/8" CAPTURED GLASS)

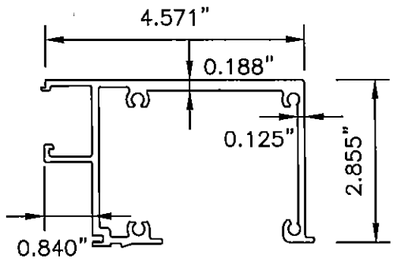


41139
(FRAME HEAD – 9/16" CAPTURED GLASS)

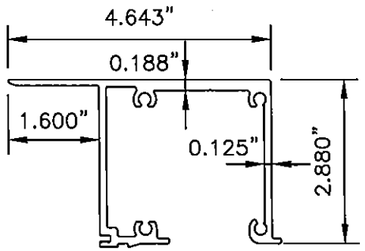


41117
(FRAME HEAD – 1 3/8" STRUCTURALLY GLAZED GLASS)

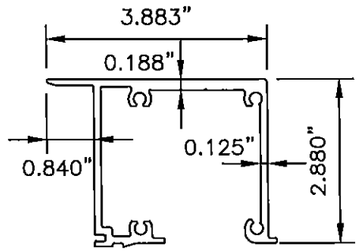


41116
(FRAME HEAD – 9/16" STRUCTURALLY GLAZED GLASS)

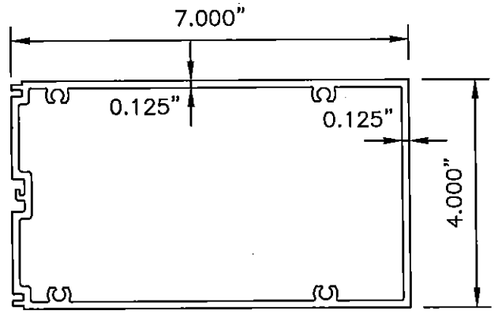


41118
(4" INTERMEDIATE HORIZONTAL)

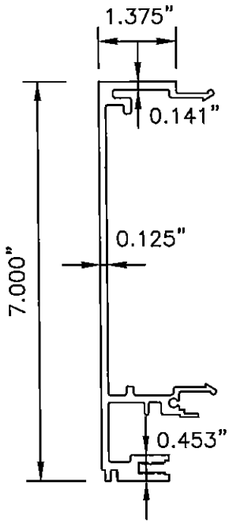


41175
(3" MALE MULLION HALF)

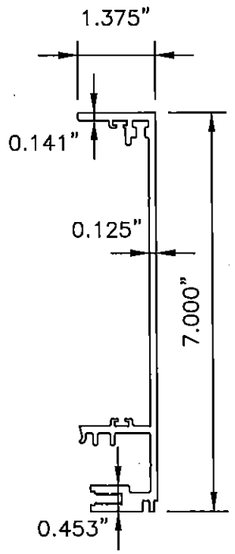


41176
(3" FEMALE MULLION HALF)

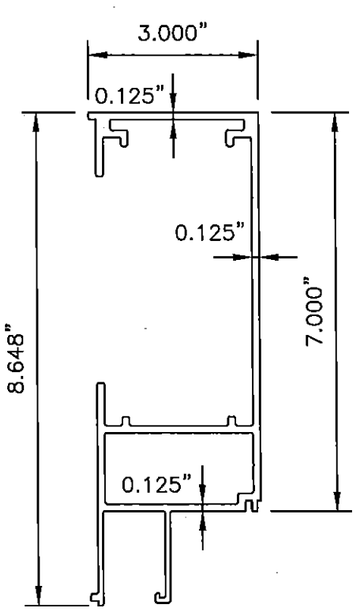


41100
(JAMB – 1 3/8" CAPTURED GLASS)

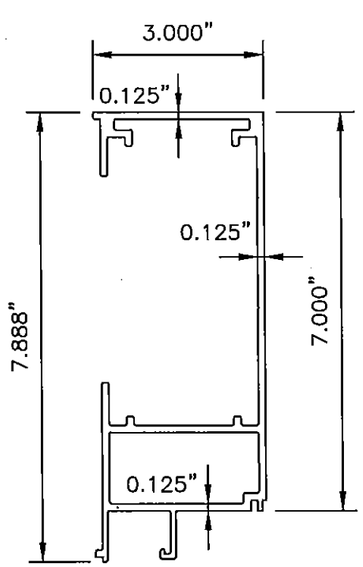


41042
(JAMB – 9/16" CAPTURED GLASS)

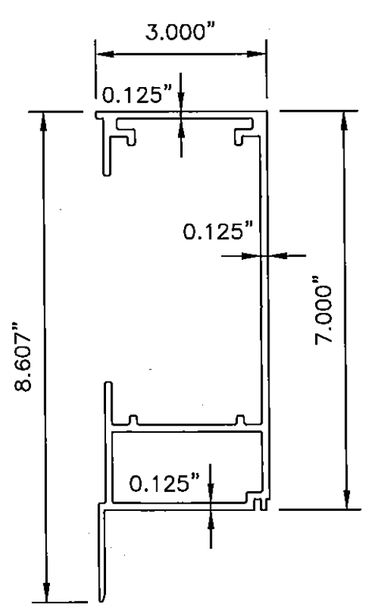


41108
(JAMB – 1 3/8" STRUCTURALLY GLAZED GLASS)

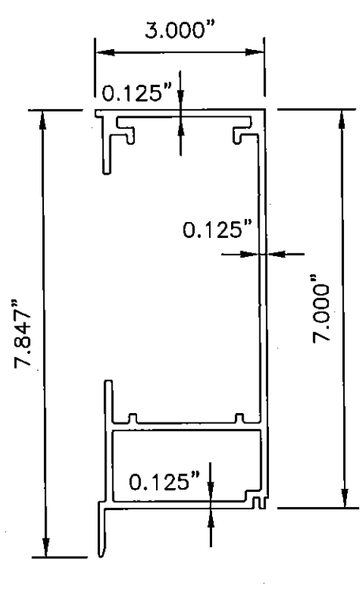


41107
(JAMB – 9/16" STRUCTURALLY GLAZED GLASS)

EXTRUSIONS (6063–T6 ALLOY)

FOR MIAMI–DADE CO. B.C.C.O.

PRODUCT REVISED
as complying with the Florida
Building Code
Acceptance No 15-0603.19
Expiration Date June 3, 2019
By Manuel Perez
Miami Dade Product Control

enclos corp
2770 Blue Water Road
Eagan, MN 55121–1400
Tel. 651-796-6100 • Fax 651-994-6360
Engineering Locations
Eagan, MN • Montreal, QC, CA • Moncton, NB, CA
St. Louis, MO • Manila, PH

REVISIONS

WILLIAM D. COOK LICENSE SEAL No 43904 MAR 3 1 2015 STATE OF FLORIDA PROFESSIONAL ENGINEER
Reviewed For Structural Integrity Only

BROMLEY • COOK ENGINEERING
STRUCTURAL ENGINEERING SERVICES
5440 N.W. 33RD AVENUE SUITE 101
FORT LAUDERDALE, FLORIDA 33309
TEL: (954) 772-4624 FAX: (954) 772-4628
CERT. OF AUTH. #00009124
WILLIAM D. COOK P.E.
FLA P.E. # 43904
FLA S.I. # 2008

| Date | Scale |
|---|---|
| 4/17/14 | |

Drawing No.
7030TSSMI

Drawing Title
7030 SERIES CURTAIN WALL
TWIN SPAN
SMALL MISSILE IMPACT

Sheet No.
28/31

chris davy
08/15/2013

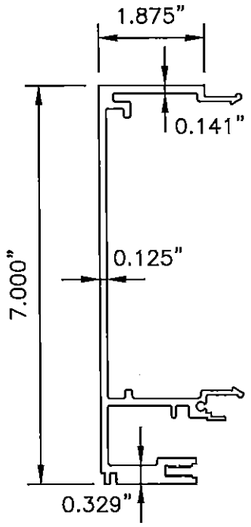


41196
(4" MALE MULLION HALF)

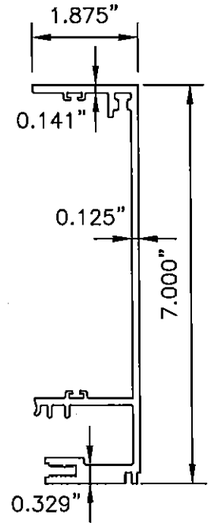


41197
(4" FEMALE MULLION HALF)

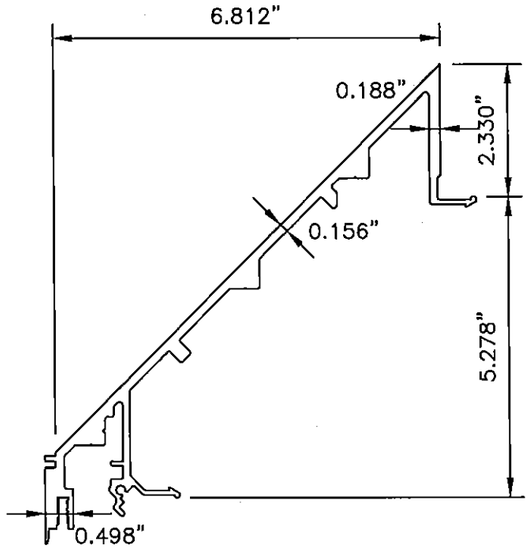


41177
(CORNER MULLION – MALE)

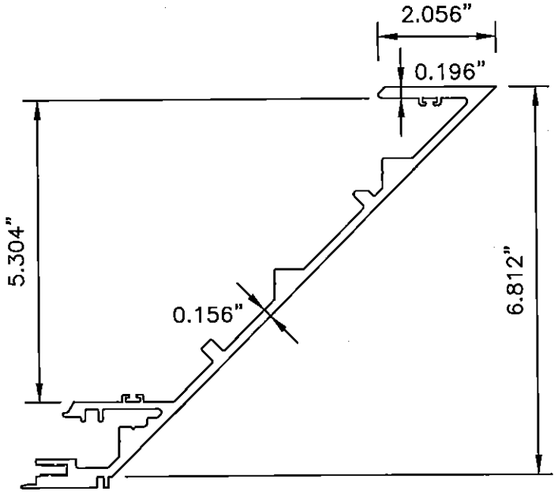


41178
(CORNER MULLION – FEMALE)

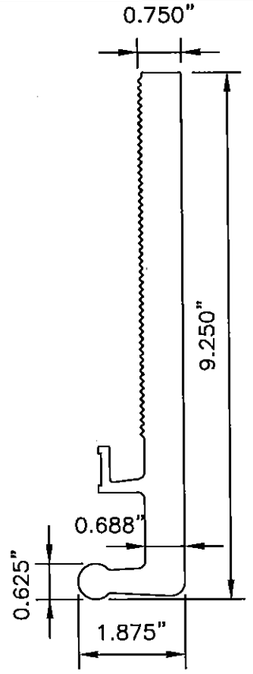


41191
(MID-SPAN ANCHOR)
6105-T5

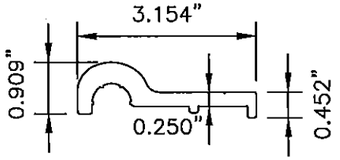


41098
(MID-SPAN ANCHOR RETAINER CLIP)
6105-T5

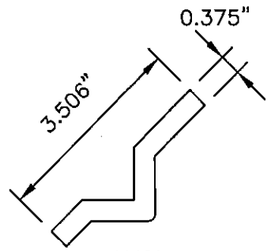


41189
(CORNER LIFT LUG)
6105-T5

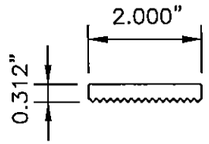


41192
(ANCHOR BOLT WASHER)
6105-T5

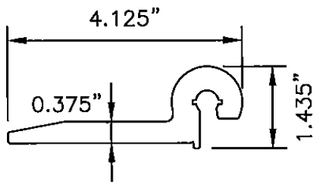


41095
(MULL – JAMB ANCHOR FIST)
6105-T5

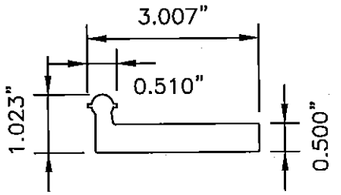


41096
(MULL – JAMB ANCHOR HOOK)
6105-T5

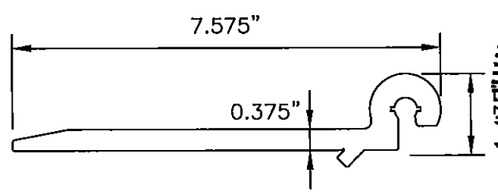


41105
(CORNER MULLION ANCHOR FIST)
6105-T5

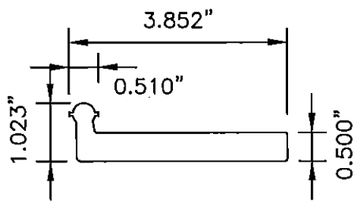


41106
(CORNER MULLION ANCHOR HOOK)
6105-T5

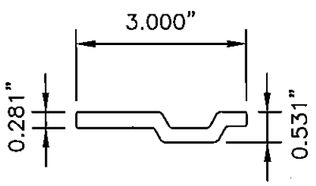


41045
(SPLICE BAR/LIFT LUG)
6105-T5

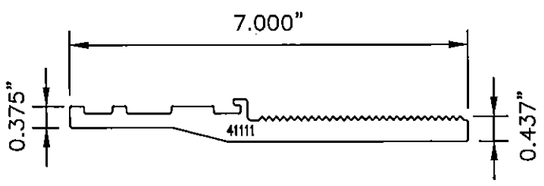


41111
(STARTER SILL ANCHOR PLATE)
6105-T5

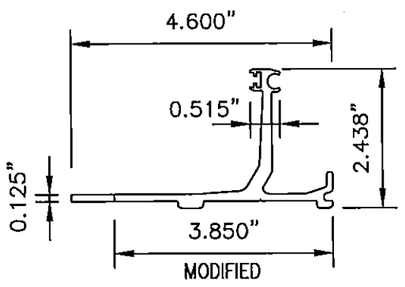


41078
(CHICKEN HEAD – 1 3/8" STRUCTURALLY GLAZED GLASS – MODIFY FOR 9/16" GLASS)

EXTRUSIONS (6063-T6 ALLOY)
U.N.O.

FOR MIAMI-DADE CO. B.C.C.O.

PRODUCT REVISED
as complying with the Florida Building Code
Acceptance No 15-0603.19
Expiration Date June 3, 2019
By Manuel Perez
Miami Dade Product Control

enclos corp
2770 Blue Water Road
Eagan, MN 55121-1400
Tel. 651-796-6100 • Fax 651-994-6360
Engineering Locations
Eagan, MN • Montreal, QC, CA • Moncton, NB, CA
St. Louis, MO • Manila, PH

REVISIONS

WILLIAM D. COOK
LICENSE
SEAL:
No 43904
MAR 3 1 2015
STATE OF
PROFESSIONAL ENGINEER
Reviewed For Structural Integrity Only

BROMLEY · COOK ENGINEERING, INC.
STRUCTURAL ENGINEERING SERVICES
5440 N.W. 33RD AVENUE SUITE 100
FORT LAUDERDALE, FLORIDA 33309
TEL: (954) 772-4624 FAX: (954) 772-5634
CERT. OF AUTH. #00009124
WILLIAM D. COOK P.E.
FLA P.E. # 43904
FLA S.I. # 2008

| Date | Scale |
|---|---|
| 4/17/14 | |

Drawing No.
7030TSSMI

Drawing Title
7030 SERIES CURTAIN WALL
TWIN SPAN
SMALL MISSILE IMPACT

Sheet No.
29/31

08/18/2015 chris davy

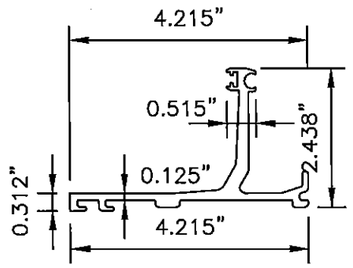


41057
(CHICKEN HEAD – 9/16" CAPTURED GLASS)

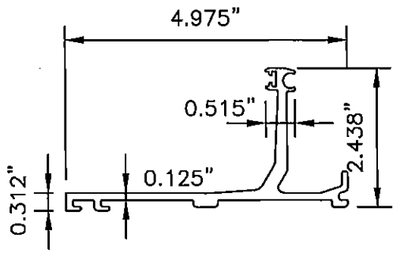


41064
(CHICKEN HEAD – 1 3/8" CAPTURED GLASS)

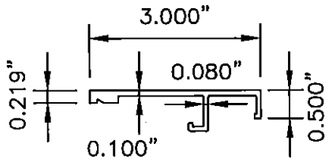


41101
(JAMB COVER)

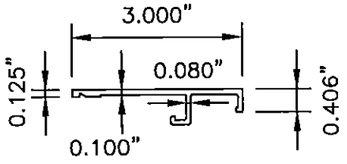


41102
(HEAD / SILL COVER)

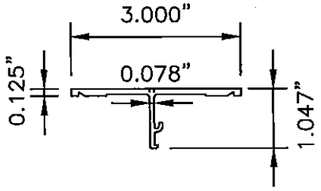


41028
(HORIZONTAL COVER)

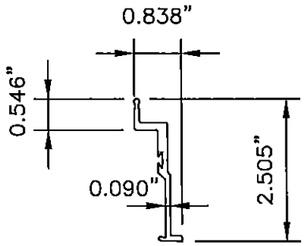


41182
(VERTICAL COVER BLADE – 9/16" GLASS)

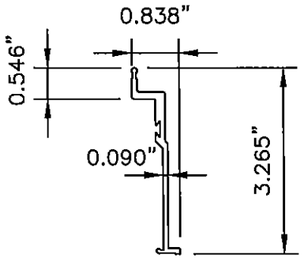


41183
(VERTICAL COVER BLADE – 1 3/8" GLASS)

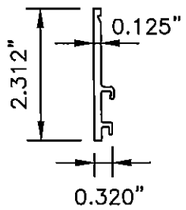


41061
(SILL COVER @ STACK RAIL – UPPER SPAN SILL)

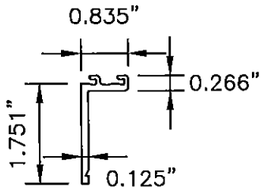


41062
(SILL COVER @ STACK RAIL – LOWER SPAN HEAD)

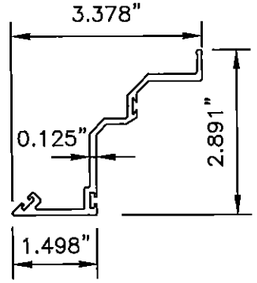


41188
(CORNER MULLION TRIM FOR 1 3/8" STRUCTURALLY GLAZED GLASS)

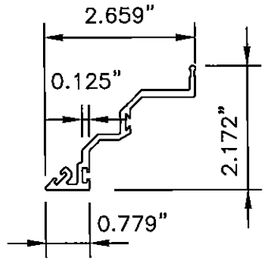


41193
(CORNER MULLION TRIM FOR 9/16" STRUCTURALLY GLAZED GLASS)

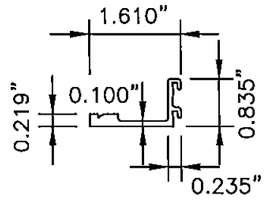


41075
(CORNER MULLION COVER)

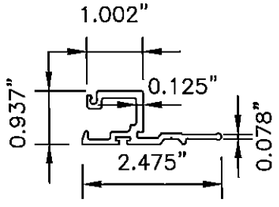


41060
(SETTING CHAIR AT STACK RAIL – 9/16" CAPTURED GLASS)

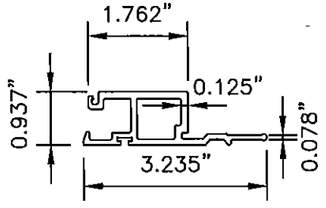


41065
(SETTING CHAIR AT STACK RAIL – 1 3/8" CAPTURED GLASS)

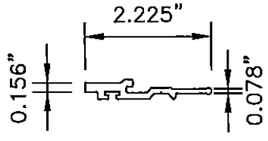


41080
(SETTING CHAIR AT STACK RAIL – 9/16"STRUCTURALLY GLAZED GLASS)

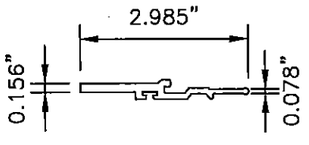


41077
(SETTING CHAIR AT STACK RAIL – 1 3/8 "STRUCTURALLY GLAZED GLASS)

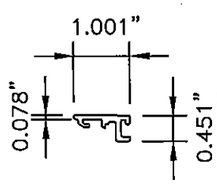


41027
(SETTING CHAIR 9/16" GLASS)

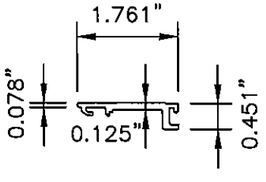


41043
(SETTING CHAIR 1 3/8" GLASS)

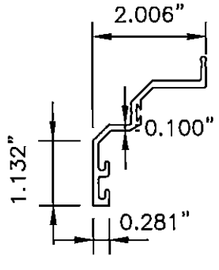


41186
(CORNER MULLION END CAP 9/16" CAPTURED GLASS)

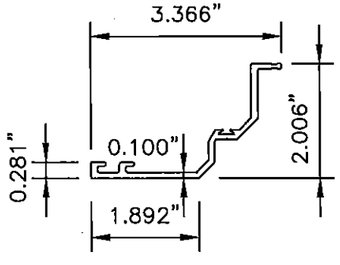


41187
(CORNER MULLION END CAP 1 3/8" CAPTURED GLASS)

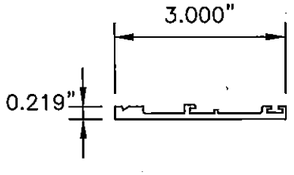


41181
(VERTICAL COVER – ALL GLASS)

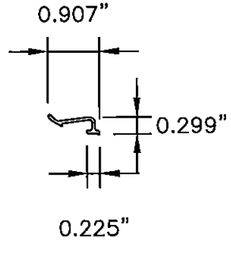


41011
(ANTI–BUCKLING CLIP)

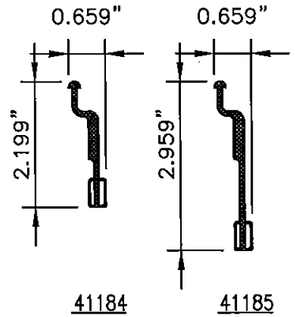


41184 41185
(BUTT JOINT GLASS FILLER)
NOTE – MATERIAL SCP

EXTRUSIONS (6063–T6 ALLOY)

FOR MIAMI–DADE CO. B.C.C.O.

PRODUCT REVISED
as complying with the Florida
Building Code
Acceptance No 15-0603.19
Expiration Date June 3, 2019
By Manuel Perez
Miami Dade Product Control

WILLIAM D. COOK LICENSE No. 43904 MAR 3 1 2015 STATE OF FLORIDA PROFESSIONAL ENGINEER
Registered For Structural Integrity Only


enclos corp

2770 Blue Water Road
Eagan, MN 55121–1400
Tel. 651–796–6100 • Fax 651–994–6360
Engineering Locations
Eagan, MN • Montreal, QC, CA. • Moncton, NB, CA
St. Louis, MO • Manila, PH

BROMLEY · COOK ENGINEERING INC.
STRUCTURAL ENGINEERING SERVICES
5440 N.W. 33RD AVENUE SUITE 101
FORT LAUDERDALE, FLORIDA 33309
TEL: (954) 772–4624 FAX: (954) 772–4627
CERT. OF AUTH. #00009124
WILLIAM D. COOK P.E.
FLA P.E. # 43904
FLA SI. # 2008


REVISIONS

| Date | Scale |
|---|---|
| 4/17/14 | |

Drawing No.
7030TSSMI

Drawing Title
7030 SERIES CURTAIN WALL
TWIN SPAN
SMALL MISSILE IMPACT

Sheet No.
30/31

chris davy
08/18/2015

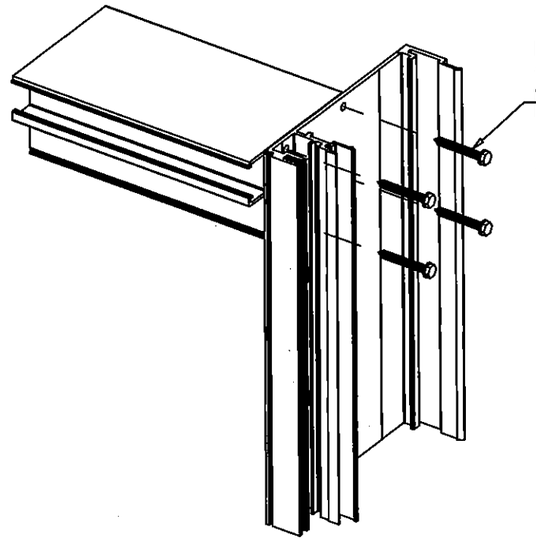


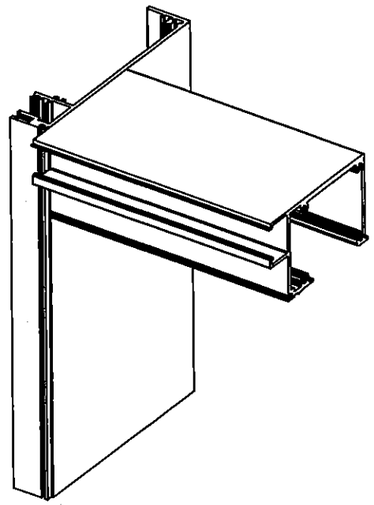

1/31 HEAD RAIL ISOMETRIC JOINERY DETAILS
SCALE: N.T.S.

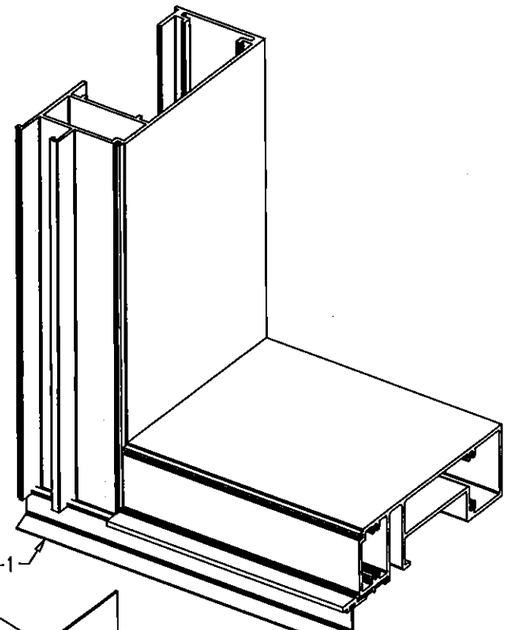


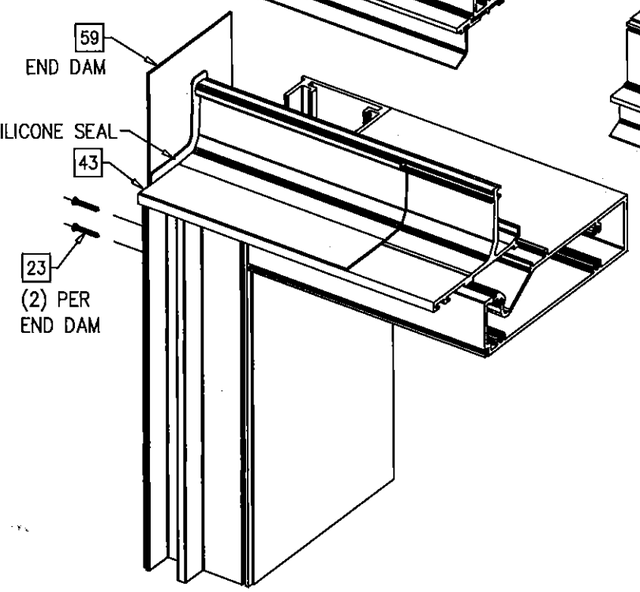


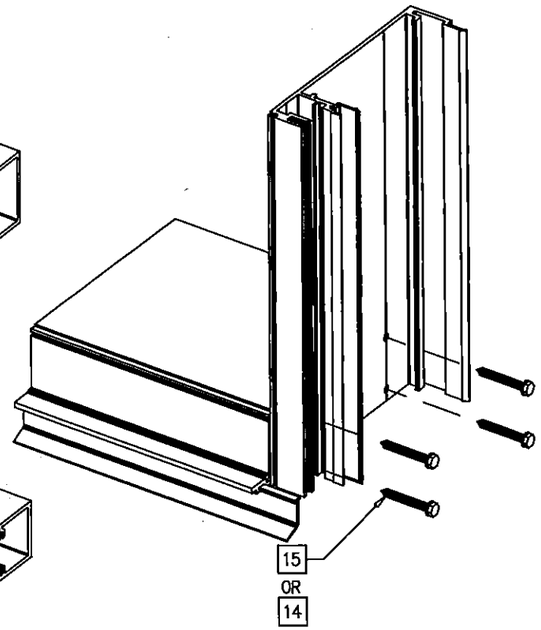


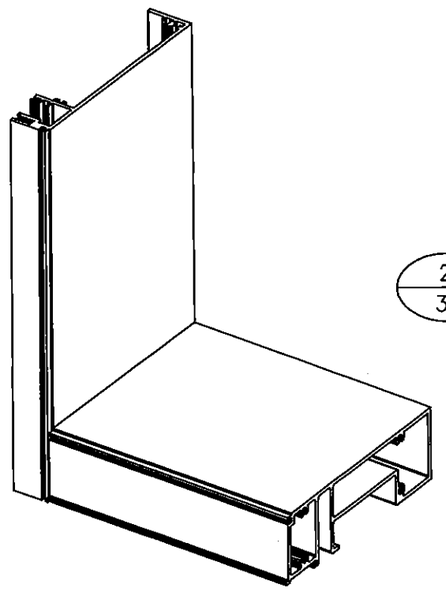

2/31 SILL / STACK RAIL ISOMETRIC JOINERY DETAILS
SCALE: N.T.S.

FOR MIAMI-DADE CO. B.C.C.O.

PRODUCT REVISED
as complying with the Florida
Building Code
Acceptance No 15-0603.19
Expiration Date June 3, 2019
By Manuel Perez
Miami-Dade Product Control

enclos corp
2770 Blue Water Road
Eagan, MN 55121-1400
Tel. 651-796-6100 • Fax 651-994-6360
Engineering Locations
Eagan, MN • Montreal, QC, CA • Moncton, NB, CA
St. Louis, MO • Manila, PH

REVISIONS

BROMLEY - COOK ENGINEERING, INC.
STRUCTURAL ENGINEERING SERVICES
5440 N.W. 33RD AVENUE SUITE 104
FORT LAUDERDALE, FLORIDA 33309
TEL: (954) 772-4624 FAX: (954) 772-4627
CERT. OF AUTH. #00009124
WILLIAM D. COOK P.E.
FLA P.E. # 43904
FLA S.I. # 2008

WILLIAM D. COOK
LICENSE
NO. 43904
MAR 31 2015
STATE OF
FLORIDA
PROFESSIONAL ENGINEER
Sealed For Structural Integrity Only

| Date | Scale |
|---|---|
| 4/17/14 | |

Drawing No.
7030TSSMI

Drawing Title
7030 SERIES CURTAIN WALL
TWIN SPAN
SMALL MISSILE IMPACT

Sheet No.
31/31

chris davy
08/18/2015