MIAMI-DADE COUNTY
DEPARTMENT OF REGULATORY AND ECONOMIC RESOURCES (RER)
BOARD AND CODE ADMINISTRATION DIVISION

MIAMI-DADE COUNTY
PRODUCT CONTROL SECTION
11805 SW 26 Street, Room 208
T (786) 315-2590 F (786) 315-2599
www.miamidade.gov/economy

NOTICE OF ACCEPTANCE (NOA)

PGT Industries, Inc.
1070 Technology Drive
North Venice, FL 34275

SCOPE:

This NOA is being issued under the applicable rules and regulations governing the use of construction materials. The documentation submitted has been reviewed and accepted by Miami-Dade County RER - Product Control Section to be used in Miami Dade County and other areas where allowed by the Authority Having Jurisdiction (AHJ).

This NOA shall not be valid after the expiration date stated below. The Miami-Dade County Product Control Section (In Miami-Dade County) and/or the AHJ (in areas other than Miami-Dade County) reserve the right to have this product or material tested for quality assurance purposes. If this product or material fails to perform in the accepted manner, the manufacturer will incur the expense of such testing and the AHJ may immediately revoke, modify, or suspend the use of such product or material within their jurisdiction. RER reserves the right to revoke this acceptance, if it is determined by Miami–Dade County Product Control Section that this product or material fails to meet the requirements of the applicable building code.

This product is approved as described herein, and has been designed to comply with the Florida Building Code, including the High Velocity Hurricane Zone.-

DESCRIPTION: Series "SH-800" Aluminum Single Hung Window – L.M.I.

APPROVAL DOCUMENT: Drawing No. **MD-SH800LM-01**, titled "SH Window – Large Missile", sheets 1 through 7 of 7, dated 11/11/11 with revision A dated 05/28/15, prepared by manufacturer, signed and sealed by A. Lynn Miller, P.E., bearing the Miami-Dade County Product Control Revision stamp with the Notice of Acceptance number and expiration date by the Miami-Dade County Product Control Section.

MISSILE IMPACT RATING: Large and Small Missile Impact Resistant.

LABELING: Each unit shall bear a permanent label with the manufacturer's name or logo, city, state, model/series, and following statement: "Miami-Dade County Product Control Approved", unless otherwise noted herein.

RENEWAL of this NOA shall be considered after a renewal application has been filed and there has been no change in the applicable building code negatively affecting the performance of this product.

TERMINATION of this NOA will occur after the expiration date or if there has been a revision or change in the materials, use, and/or manufacture of the product or process. Misuse of this NOA as an endorsement of any product, for sales, advertising or any other purposes shall automatically terminate this NOA. Failure to comply with any section of this NOA shall be cause for termination and removal of NOA.

ADVERTISEMENT: The NOA number preceded by the words Miami-Dade County, Florida, and followed by the expiration date may be displayed in advertising literature. If any portion of the NOA is displayed, then it shall be done in its entirety.

INSPECTION: A copy of this entire NOA shall be provided to the user by the manufacturer or its distributors and shall be available for inspection at the job site at the request of the Building Official.

This NOA **revises NOA# 11-1222.04** and consists of this page 1 and evidence pages E-1 and E-2, as well as approval document mentioned above.

The submitted documentation was reviewed by **Manuel Perez, P.E.**

MIAMI-DADE COUNTY APPROVED

8/14/15

NOA No. 15-0609.02
Expiration Date: May 03, 2017
Approval Date: August 20 2015

PGT Industries, Inc.

NOTICE OF ACCEPTANCE: EVIDENCE SUBMITTED

A. DRAWINGS

1. Manufacturer's die drawings and sections.
   (Submitted under previous NOA No. 11-1222.04)
2. Drawing No. **MD-SH800LM-01**, titled "SH Window – Large Missile", sheets 1 through 7 of 7, dated 11/11/11, with revision A dated 05/28/15, prepared by manufacturer, signed and sealed by Anthony Lynn Miller, P.E.

B. TESTS

1. Test reports on: 1) Air Infiltration Test, per FBC, TAS 202-94
   2) Uniform Static Air Pressure Test, Loading per FBC, TAS 202-94
   3) Water Resistance Test, per FBC, TAS 202-94
   4) Small Missile Impact Test per FBC, TAS 201-94
   5) Cyclic Wind Pressure Loading per FBC, TAS 203-94
   6) Forced Entry Test, per FBC 2411.3.2.1, and TAS 202-94

   along with marked-up drawings and installation diagram of an aluminum single hung window, prepared by Fenestration Testing Laboratory, Inc., Test Report No. **FTL-6642**, dated 10/03/11, signed and sealed by Marlin D. Brinson, P.E.
   (Submitted under previous NOA No. 11-1222.04)
2. Test reports on: 1) Uniform Static Air Pressure Test, Loading per FBC, TAS 202-94
   2) Large Missile Impact Test per FBC, TAS 201-94
   3) Cyclic Wind Pressure Loading per FBC, TAS 203-94

   along with marked-up drawings and installation diagram of an aluminum single hung window, prepared by Fenestration Testing Laboratory, Inc., Test Report No. **FTL-6643**, dated 10/03/11, signed and sealed by Marlin D. Brinson, P.E.
   (Submitted under previous NOA No. 11-1222.04)

C. CALCULATIONS

1. Anchor verification calculations and structural analysis, complying with **FBC-5th Edition (2014)**, dated 05/29/15, prepared by manufacturer, signed and sealed by Anthony Lynn Miller, P.E.
2. Glazing complies with **ASTM E1300-04**

D. QUALITY ASSURANCE

1. Miami-Dade Department of Regulatory and Economic Resources (RER).

Manuel Perez

Manuel Perez, P.E.
Product Control Examiner
NOA No. 15-0609.02
Expiration Date: May 03, 2017
Approval Date: August 20 2015

NOTICE OF ACCEPTANCE: EVIDENCE SUBMITTED

E. MATERIAL CERTIFICATIONS

1. Notice of Acceptance No. **14-0916.11** issued to **Kuraray America, Inc.** for their **"SentryGlas® (Clear and White) Glass Interlayers"** dated 06/25/15, expiring on 07/04/18.

F. STATEMENTS

1. Statement letter of conformance, complying with **FBC-5th Edition (2014)**, dated May 29, 2015, issued by manufacturer, signed and sealed by Anthony Lynn Miller, P.E.
2. Statement letter of no financial interest, dated May 29, 2015, issued by manufacturer, signed and sealed by Anthony Lynn Miller, P.E.
3. Laboratory compliance letters for Test Reports No. **FTL-6642** and **FTL-6643**, issued by Fenestration Testing Laboratory, Inc., dated 10/03/11, signed and sealed by Marlin D. Brinson, P.E.
   (Submitted under previous NOA No. 11-1222.04)

G. OTHERS

1. Notice of Acceptance No. **11-1222.04**, issued to PGT Industries, Inc. for their Series "SH-800" Aluminum Single Hung Window - L.M.I." approved on 04/03/12 and expiring on 05/03/17.

Manuel Perez

Manuel Perez, P.E.
Product Control Examiner
NOA No. 15-0609.02
Expiration Date: May 03, 2017
Approval Date: August 20 2015

GENERAL NOTES: 800 SERIES LARGE AND SMALL MISSILE IMPACT RESISTANT SINGLE HUNG WINDOW

DESIGN PRESSURE RATING	IMPACT RATING
+90.0/-110.0 OR +90.0/-130.0	LARGE & SMALL MISSILE IMPACT RESISTANT

1) THIS PRODUCT HAS BEEN DESIGNED & TESTED TO COMPLY WITH THE REQUIREMENTS OF THE FLORIDA BUILDING CODE, INCLUDING THE HIGH VELOCITY HURRICANE ZONE (HVHZ). A

2) SHUTTERS ARE NOT REQUIRED WHEN USED IN WIND-BORNE DEBRIS REGIONS.

3) FOR MASONRY APPLICATIONS IN MIAMI-DADE COUNTY, USE ONLY MIAMI-DADE COUNTY APPROVED MASONRY ANCHORS. MATERIALS USED FOR ANCHOR EVALUATIONS WERE SOUTHERN PINE, ASTM C90 CONCRETE MASONRY UNITS AND CONCRETE WITH MIN. KSI PER ANCHOR TYPE, SEE TABLES 2, 4 OR 6.

4) ALL WOOD BUCKS LESS THAN 1-1/2" THICK ARE TO BE CONSIDERED 1X INSTALLATIONS. 1X WOOD BUCKS ARE OPTIONAL IF UNIT IS INSTALLED DIRECTLY TO SUBSTRATE. WOOD BUCKS DEPICTED AS 2X ARE 1-1/2" THICK OR GREATER. 1X AND 2X BUCKS (WHEN USED) SHALL BE DESIGNED TO PROPERLY TRANSFER LOADS TO THE STRUCTURE. WOOD BUCK DESIGN AND INSTALLATION IS THE RESPONSIBILITY OF THE ENGINEER OR ARCHITECT OF RECORD.

5) ANCHOR EMBEDMENT TO BASE MATERIAL SHALL BE BEYOND WALL DRESSING OR STUCCO. USE ANCHORS OF SUFFICIENT LENGTH AS SPECIFIED ON TABLES 2, 4 OR 6.
NARROW JOINT SEALANT IS USED ON ALL FOUR CORNERS OF THE FRAME. OVERALL SEALING/FLASHING STRATEGY FOR WATER RESISTANCE OF INSTALLATION SHALL BE DONE BY OTHERS AND IS BEYOND THE SCOPE OF THESE INSTRUCTIONS.

6) 1/4" MAX. SHIMS ARE REQUIRED AT EACH ANCHOR LOCATION WHERE THE PRODUCT IS NOT FLUSH TO THE SUBSTRATE. USE SHIMS CAPABLE OF TRANSFERRING APPLIED LOADS.

7) DESIGN PRESSURES:
A. NEGATIVE DESIGN LOADS BASED ON STRUCTURAL & CYCLE TESTING AND GLASS PER ASTM E1300.
B. POSITIVE DESIGN LOADS BASED ON WATER TEST PRESSURE, STRUCTURAL & CYCLE TESTING AND GLASS PER ASTM E1300. A

8) THE ANCHORAGE METHODS SHOWN HAVE BEEN DESIGNED TO RESIST THE WINDLOADS CORRESPONDING TO THE REQUIRED DESIGN PRESSURE. THE 33-1/3% STRESS INCREASE HAS NOT BEEN USED IN THE DESIGN OF THIS PRODUCT. THE 1.6 LOAD DURATION FACTOR WAS USED FOR THE EVALUATION OF ANCHORS INTO WOOD. ANCHORS THAT COME INTO CONTACT WITH OTHER DISSIMILAR MATERIALS SHALL MEET THE REQUIREMENTS OF THE FLORIDA BUILDING CODE FOR CORROSION RESISTANCE.

9) REFERENCES: TEST REPORTS FTL-6642; ELCO ULTRACON NOA; ELCO CRETEFLEX NOA; ANSI/AF&PA NDS FOR WOOD CONSTRUCTION AND ADM ALUMINUM DESIGN MANUAL.

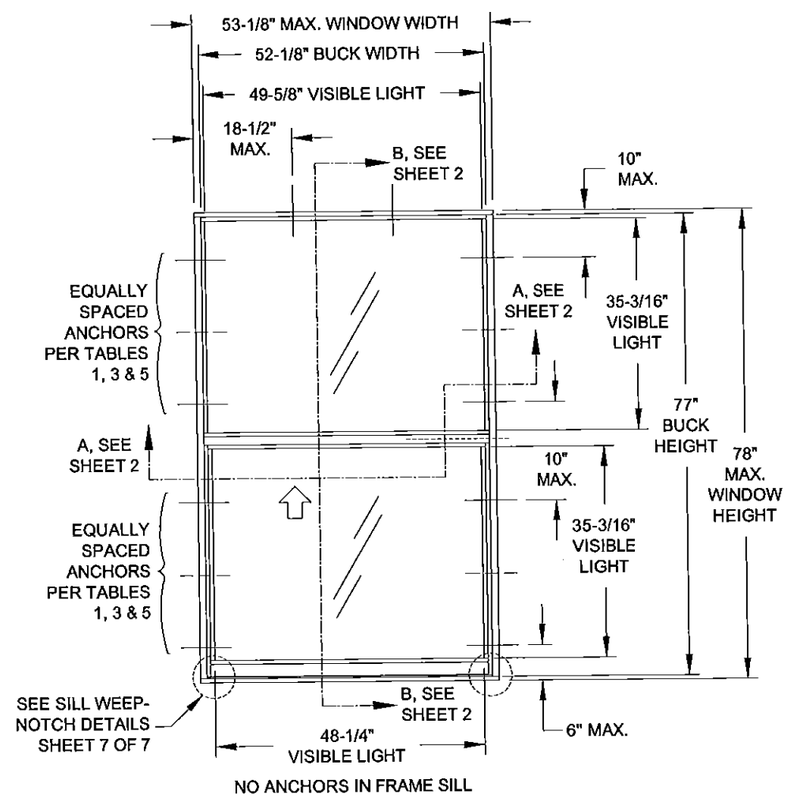

TYP. EQUAL-LITE FRAME ELEVATION

Maximum Anchor Spacing, As tested, Equal-lite	
Header	16.125
Above MR	24.58
Below MR	13.71

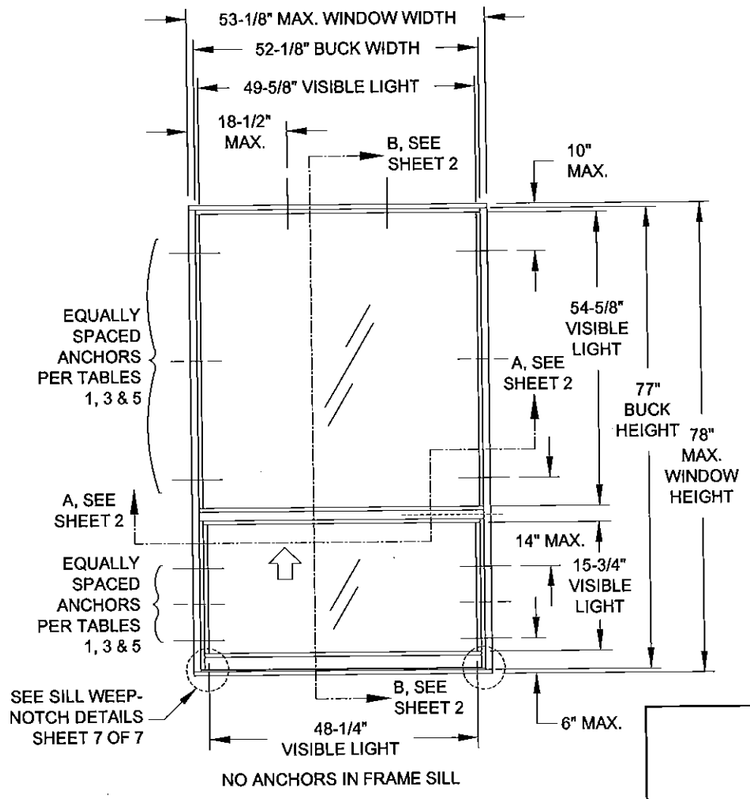

TYP. PROVIEW / ORIEL FRAME ELEVATION

Maximum Anchor Spacing, As tested, ProView	
Header	16.125
Above MR	22.03
Below MR	13.95

Window Width	Window Height	Sash Height or Configuration[1]	Design Pressure (+) psf	Design Pressure (-) psf
Up to 53-1/8"	Up to 50-5/8"	All Sash Heights	+90.0	-130.0
	Over 50-5/8" and less than 63"	Equal-Lite	+90.0	-130.0
		25" thru 30-15/16"	+90.0	-130.0
		13" thru 24-15/16"	+90.0	-110.0
	63" and Over	Equal-Lite	+90.0	-130.0
		All Proview / Oriel	+90.0	-110.0

[1] SASH HEIGHT MUST BE MEASURED AS SHOWN IN FIGURE A, SHEETS 3, 4 OR 5.

SHEET INDEX:

GENERAL NOTES..... 1
ELEVATIONS..... 1
DESIGN PRESSURES..... 1
INSTALLATION..... 2
ANCHOR QUANTITIES A..... 3
ANCHOR QUANTITIES B..... 4
ANCHOR QUANTITIES C..... 5
EXTRUSION PROFILES..... 6
PARTS LIST..... 6
GLAZING DETAILS..... 6
ASSEMBLY DETAILS..... 7

ANTHONY LYNN MILLER LICENSE No. 58705 STATE OF FLORIDA PROFESSIONAL ENGINEER
5/22/15
A. LYNN MILLER, P.E.
P.E.# 58705

PGT®
1070 TECHNOLOGY DRIVE
N. VENICE, FL 34275
P.O. BOX 1529
NOKOMIS, FL 34274
CERT. OF AUTH. #29296

Revised By:	Date:	Revision:
SC	05/28/15	FBC 2010 REV

PRODUCT REVISED
as complying with the Florida Building Code
Acceptance No 15-0609.02
Expiration Date May 3, 2017
By Manuel Perez
Miami Dade Product Control

Description:	Drawn By:
GENERAL NOTES & ELEVATIONS	J ROSOWSKI

Title:	Date:
SH WINDOW - LARGE MISSILE	11/11/11

Series/Model:	Scale:	Sheet:	Drawing No.	Rev:
SH-800	NTS	1 OF 7	MD-SH800LM-01	A

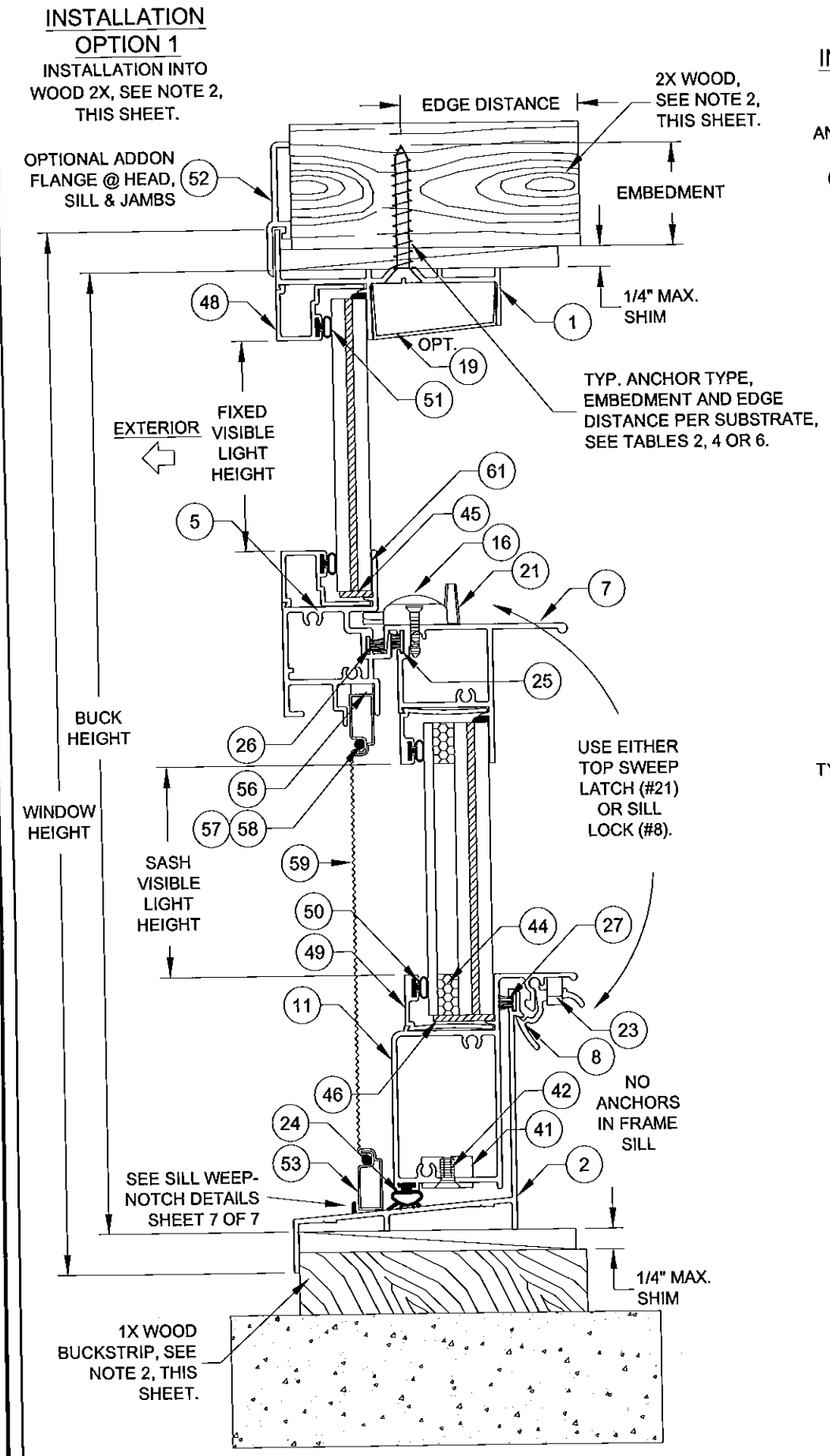

VERTICAL SECTION B-B

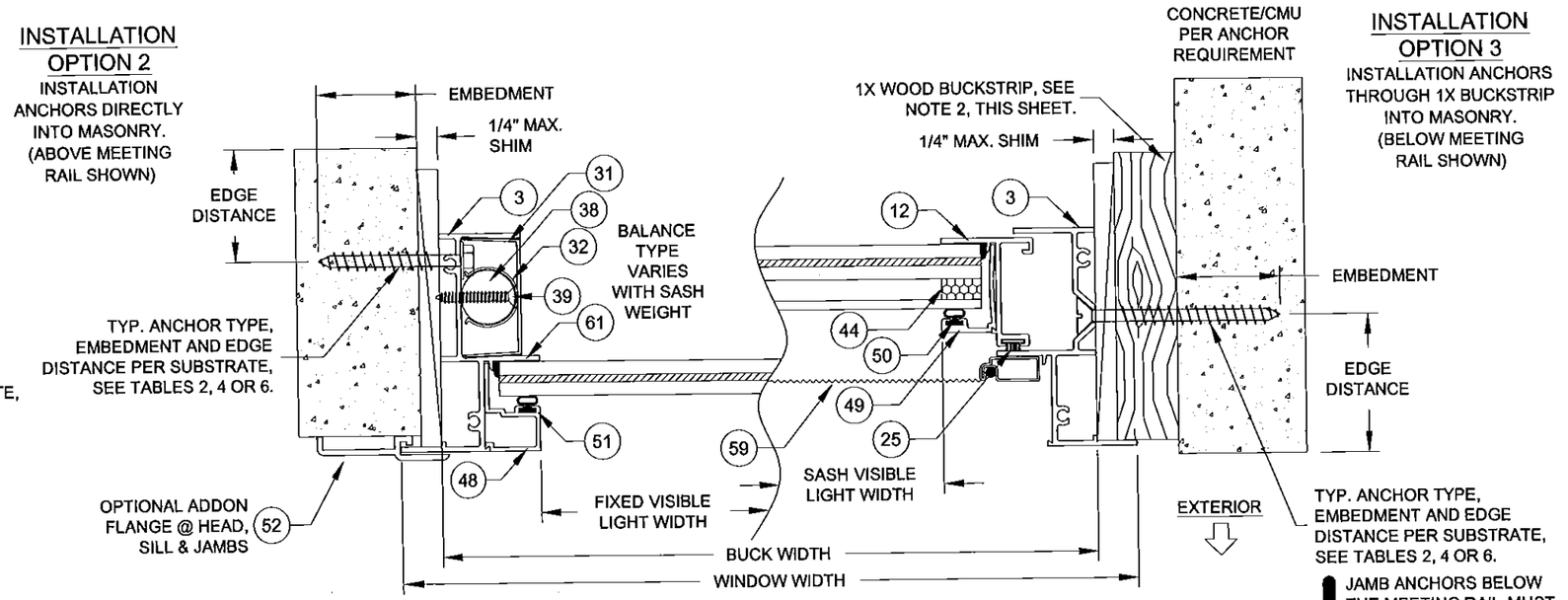

HORIZONTAL SECTION A-A

JAMB ANCHORS BELOW THE MEETING RAIL MUST NOT INTERFERE WITH THE OPERATION OF THE SASH.

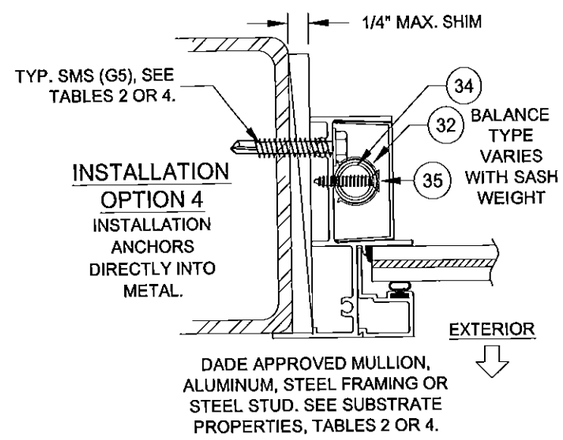

NOTES

1) USE ONLY SUBSTRATE-APPROPRIATE ANCHORS LISTED ON TABLES 2, 4 OR 6. FOLLOW EMBEDMENT AND EDGE DISTANCE LIMITS. ANY INSTALLATION OPTION SHOWN MAY BE USED ON ANY SIDE OF THE WINDOW.

2) ALL WOOD BUCKS LESS THAN 1-1/2" THICK ARE TO BE CONSIDERED 1X INSTALLATIONS. 1X WOOD BUCKS ARE OPTIONAL IF UNIT IS INSTALLED DIRECTLY TO SUBSTRATE. WOOD BUCKS DEPICTED AS 2X ARE 1-1/2" THICK OR GREATER. 1X AND 2X BUCKS (WHEN USED) SHALL BE DESIGNED TO PROPERLY TRANSFER LOADS TO THE STRUCTURE. WOOD BUCK DESIGN AND INSTALLATION IS THE RESPONSIBILITY OF THE ENGINEER OR ARCHITECT OF RECORD.

PRODUCT REVISED
as complying with the Florida Building Code
Acceptance No 15-0609.02
Expiration Date May 3, 2017
By Manuel Perez
Miami Dade Product Control

ANTHONY LYNN MILLER
LICENSE
No. 58705
STATE OF FLORIDA
PROFESSIONAL ENGINEER
5/29/15
A. LYNN MILLER, P.E.
P.E.# 58705

PGT®
1070 TECHNOLOGY DRIVE
N. VENICE, FL 34275
P.O. BOX 1529
NOKOMIS, FL 34274
CERT. OF AUTH. #29296

Revised By:	Date:	Revision:
SC	05/28/15	NO CHANGES

Description:	Drawn By:
FLANGE FRAME INSTALLATION DETAILS	J ROSOWSKI

Title:	Date:
SH WINDOW - LARGE MISSILE	11/11/11

Series/Model:	Scale:	Sheet:	Drawing No.	Rev:
SH-800	NTS	2 OF 7	MD-SH800LM-01	A

TABLE 1:

ANCHOR QUANTITIES REQUIRED - Group A Anchors

Overall Window Height	Sash Height or Height Range	Overall Window Width: 19-1/8" Jamb Above MR	19-1/8" Jamb Below MR	19-1/8" Header	26-1/2" Jamb Above MR	26-1/2" Jamb Below MR	26-1/2" Header	33" Jamb Above MR	33" Jamb Below MR	33" Header	37" Jamb Above MR	37" Jamb Below MR	37" Header	41" Jamb Above MR	41" Jamb Below MR	41" Header	45" Jamb Above MR	45" Jamb Below MR	45" Header	49" Jamb Above MR	49" Jamb Below MR	49" Header	53-1/8" Jamb Above MR	53-1/8" Jamb Below MR	53-1/8" Header
24-1/2"	12-3/4" (Equal-Lite)	1	2	1	1	2	1	1	2	1	1	2	1	1	2	2	1	2	2	1	2	2	1	2	2
25-1/2"	13-1/4" (Equal-Lite)	1	2	1	1	2	1	1	2	1	1	2	2	1	2	2	1	2	2	1	2	2	1	3	2
37"	19" (Equal-Lite)	2	2	1	2	2	1	2	2	2	2	3	2	2	3	2	2	3	2	2	3	3	2	4	3
38-3/8"	19-5/8" (Equal-Lite)	2	2	1	2	2	1	2	2	2	2	3	2	2	3	2	2	3	2	2	3	3	2	4	3
	19" thru 19-9/16"	2	2	1	2	2	1	2	2	2	2	3	2	2	3	2	2	3	2	2	3	3	2	4	3
	16" thru 18-15/16" *	2	2	1	2	2	1	2	2	2	2	3	2	2	3	2	2	3	3	2	3	3	3	4	3
	13" thru 15-15/16"	2	2	1	2	2	1	2	2	2	2	2	2	2	3	3	3	3	3	3	3	3	3	3	3
45"	23" (Equal-Lite)	2	2	1	2	2	1	2	3	2	2	3	2	2	3	2	2	4	3	2	4	3	2	4	3
	22" thru 22-15/16"	2	2	1	2	2	1	2	3	2	2	3	2	2	3	2	2	4	3	2	4	3	3	4	3
	19" thru 21-15/16" *	2	2	1	2	2	1	2	3	2	2	3	2	2	3	3	3	4	3	3	4	3	3	4	4
	16" thru 18-15/16"	2	2	1	2	2	1	2	2	2	3	3	2	3	3	3	3	3	3	3	3	3	3	4	4
	13" thru 15-15/16"	2	2	1	2	2	1	3	2	2	3	2	2	3	3	3	3	3	3	3	3	4	4	3	4
50-5/8"	25-3/4" (Equal-Lite)	2	3	1	2	3	1	2	3	2	2	3	2	2	4	3	3	4	3	3	4	3	3	5	3
	25" thru 25-11/16"	2	3	1	2	3	1	2	3	2	2	3	2	2	4	3	3	4	3	3	4	3	3	5	3
	22" thru 24-15/16"	2	3	1	2	3	1	2	3	2	3	3	2	3	4	3	3	4	3	3	4	3	3	5	4
	19" thru 21-15/16" *	2	2	1	2	2	1	3	3	2	3	3	2	3	3	3	3	4	3	3	4	4	4	4	4
	16" thru 18-15/16"	2	2	1	3	2	1	3	2	2	3	3	2	3	3	3	4	3	3	4	3	4	4	4	4
	13" thru 15-15/16"	2	2	1	3	2	1	3	2	2	4	2	2	4	3	3	4	3	3	4	3	4	4	3	4
63"	32" (Equal-Lite)	2	3	1	2	3	1	3	4	2	3	4	2	3	4	3	3	5	3	3	5	4	4	6	4
	31" thru 31-15/16"	2	3	1	2	3	1	3	4	2	3	4	2	3	4	3	3	5	3	3	5	4	4	6	4
	28" thru 30-15/16"	2	3	1	3	3	1	3	4	2	3	4	2	3	4	3	4	5	3	4	5	4	4	6	4
	25" thru 27-15/16" *	2	3	1	3	3	1	3	3	2	4	4	2	4	4	3	4	4	3	4	5	4	4	5	4
	22" thru 24-15/16"	3	3	1	3	3	1	4	3	2	4	3	2	4	4	3	4	4	3	5	4	4	5	5	4
	19" thru 21-15/16"	3	2	1	3	2	1	4	3	2	4	3	2	4	3	3	5	4	3	5	4	4	5	4	5
	16" thru 18-15/16"	3	2	1	4	2	1	4	2	2	5	3	2	5	3	3	5	3	3	5	3	4	6	4	5
	13" thru 15-15/16"	3	2	1	4	2	1	4	2	2	5	2	2	5	3	3	6	3	3	6	3	4	6	3	5
73"	37" (Equal-Lite)	2	3	1	3	3	1	3	4	2	3	5	2	4	5	3	4	6	3	4	6	4	4	6	4
	34" thru 36-15/16"	3	3	1	3	3	1	3	4	2	4	5	2	4	5	3	4	6	3	4	6	4	5	6	4
	31" thru 33-15/16"	3	3	1	3	3	1	4	4	2	4	4	2	4	5	3	5	5	3	5	6	4	5	6	4
	28" thru 30-15/16" *	3	3	1	3	3	1	4	4	2	4	4	2	5	4	3	5	5	3	5	5	4	5	6	5
	25" thru 27-15/16"	3	3	1	4	3	1	4	3	2	5	4	2	5	4	3	5	4	3	6	5	4	6	5	5
	22" thru 24-15/16"	3	3	1	4	3	1	5	3	2	5	3	2	5	4	3	6	4	3	6	4	4	6	5	5
	19" thru 21-15/16"	3	2	1	4	2	1	5	3	2	5	3	2	6	3	3	6	4	3	6	4	4	7	4	5
	16" thru 18-15/16"	3	2	1	4	2	1	5	2	2	6	3	2	6	3	3	7	3	3	7	3	4	7	4	5
78"	39-1/2" (Equal-Lite)	2	3	1	3	4	1	3	4	2	4	5	2	4	5	3	4	6	3	4	6	4	5	7	4
	37" thru 39-7/16"	3	3	1	3	4	1	4	4	2	4	5	2	4	5	3	4	6	3	5	6	4	5	7	4
	34" thru 36-15/16"	3	3	1	3	3	1	4	4	2	4	5	2	4	5	3	5	6	3	5	6	4	5	6	5
	31" thru 33-15/16" *	3	3	1	4	3	1	4	4	2	5	4	2	5	5	3	5	5	3	5	6	4	6	6	5
	28" thru 30-15/16"	3	3	1	4	3	1	4	4	2	5	4	2	5	4	3	6	5	3	6	5	4	6	6	5
	25" thru 27-15/16"	3	3	1	4	3	1	5	3	2	5	4	2	6	4	3	6	4	3	6	5	4	7	5	5
	22" thru 24-15/16"	3	3	1	4	3	1	5	3	2	6	3	2	6	4	3	6	4	3	7	4	4	7	5	5
	20" thru 21-15/16"	3	2	1	4	2	1	5	3	2	6	3	2	6	3	3	7	4	3	7	4	4	7	4	5

* SASH HEIGHT RANGE INCLUDES THE STANDARD PROVIEW / ORIEL CONFIGURATION.

TABLE 2:

Anchor Group	Anchor	Substrate	Min. Edge Distance	Min. Embedment
A	#12, Steel SMS (G5) or #12, 410 SS SMS	P.T. Southern Pine (SG = .55)	9/16"	1-3/8"
		6063-T5 Alum	3/8"	1/8" **
		Steel Stud, Gr. 33 min.	3/8"	0.045 (18 Ga) **
		A36 Steel	3/8"	1/8" **
	3/16" Steel Ultracon	Concrete (min. 2.9 ksi) A	2-1/2"	1-3/4"
		Grouted-filled Block, (ASTM C90)	2-1/2"	2-1/4"
	1/4" Steel Ultracon	Concrete (min. 2.9 ksi) A	1"	1-3/4"
		Hollow Block, (ASTM C90)	2-1/2"	1-1/4"

** MIMIMUM OF 3 THREADS BEYOND THE METAL SUBSTRATE.

FIGURE A: SASH CROSS SECTION (WITH INSULATED GLASS)

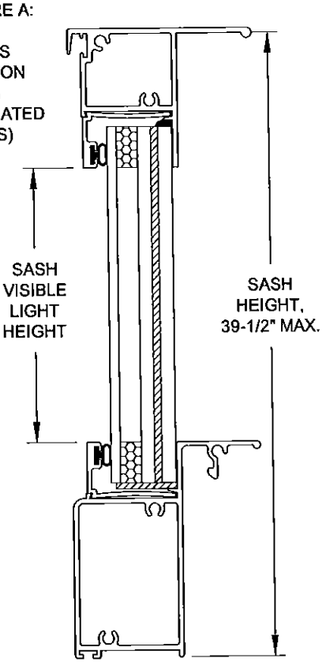

NOTES:

1) FOR BUCK DIMENSIONS, SUBTRACT 1" FROM WINDOW WIDTH OR HEIGHT.

2) "MR" = "MEETING RAIL"

3) FOR OVERALL SASH WIDTH, SUBTRACT 2-9/16" FROM THE WINDOW WIDTH.

4) FOR SIZES NOT SHOWN, ROUND UP TO THE NEXT AVAILABLE WIDTH OR HEIGHT DIMENSION SHOWN ON THE TABLE.

5) SEE SHEET 2 FOR INSTALLATION DETAILS.

SASH VISIBLE LIGHT FORMULAS:
WIDTH = WINDOW WIDTH - 4.875"
HEIGHT = SASH HEIGHT - 4.293"

FIXED VISIBLE LIGHT FORMULAS:
WIDTH = WINDOW WIDTH - 3.5"
HEIGHT = WINDOW HEIGHT - SASH HEIGHT - 3.336"

PRODUCT REVISED
as complying with the Florida Building Code
Acceptance No 15-0609.02
Expiration Date May 3, 2017
By Manuel Perez
Miami Dade Product Control

ANTHONY LYNN MILLER
LICENSE
No. 58705
5/29/15
STATE OF FLORIDA
PROFESSIONAL ENGINEER
A. LYNN MILLER, P.E.
P.E.# 58705

PGT®
1070 TECHNOLOGY DRIVE
N. VENICE, FL 34275
P.O. BOX 1529
NOKOMIS, FL 34274
CERT. OF AUTH. #29296

Revised By:	Date:	Revision:
SC	05/28/15	TABLE 2

Description: ANCHOR QUANTITIES A
Drawn By: J ROSOWSKI
Title: SH WINDOW - LARGE MISSILE
Date: 11/11/11
Series/Model: SH-800
Scale: NTS
Sheet: 3 OF 7
Drawing No. MD-SH800LM-01
Rev: A

TABLE 3:

ANCHOR QUANTITIES REQUIRED - Group B Anchors

Overall Window Height	Sash Height or Height Range	Overall Window Width: 19-1/8" Jamb Above MR	19-1/8" Jamb Below MR	19-1/8" Header	26-1/2" Jamb Above MR	26-1/2" Jamb Below MR	26-1/2" Header	33" Jamb Above MR	33" Jamb Below MR	33" Header	37" Jamb Above MR	37" Jamb Below MR	37" Header	41" Jamb Above MR	41" Jamb Below MR	41" Header	45" Jamb Above MR	45" Jamb Below MR	45" Header	49" Jamb Above MR	49" Jamb Below MR	49" Header	53-1/8" Jamb Above MR	53-1/8" Jamb Below MR	53-1/8" Header
24-1/2"	12-3/4" (Equal-Lite)	1	2	1	1	2	1	1	2	1	1	2	1	1	2	2	1	2	2	1	2	2	1	2	2
25-1/2"	13-1/4" (Equal-Lite)	1	2	1	1	2	1	1	2	1	1	2	1	1	2	2	1	2	2	1	2	2	1	2	2
37"	19" (Equal-Lite)	2	2	1	2	2	1	2	2	1	2	2	1	2	2	2	2	2	2	2	2	2	2	3	2
38-3/8"	19-5/8" (Equal-Lite)	2	2	1	2	2	1	2	2	1	2	2	1	2	2	2	2	2	2	2	2	2	2	3	2
	19" thru 19-9/16"	2	2	1	2	2	1	2	2	1	2	2	1	2	2	2	2	2	2	2	2	2	2	3	2
	16" thru 18-15/16" *	2	2	1	2	2	1	2	2	1	2	2	2	2	2	2	2	2	2	2	2	2	2	3	2
	13" thru 15-15/16"	2	2	1	2	2	1	2	2	1	2	2	2	2	2	2	2	2	2	2	2	2	2	2	2
45"	23" (Equal-Lite)	2	2	1	2	2	1	2	2	1	2	2	2	2	2	2	2	3	2	2	3	2	2	3	2
	22" thru 22-15/16"	2	2	1	2	2	1	2	2	1	2	2	2	2	2	2	2	3	2	2	3	2	2	3	2
	19" thru 21-15/16" *	2	2	1	2	2	1	2	2	1	2	2	2	2	2	2	2	3	2	2	3	2	2	3	2
	16" thru 18-15/16"	2	2	1	2	2	1	2	2	1	2	2	2	2	2	2	2	2	2	2	2	2	2	3	3
	13" thru 15-15/16"	2	2	1	2	2	1	2	2	1	2	2	2	2	2	2	2	2	2	2	2	2	3	2	3
50-5/8"	25-3/4" (Equal-Lite)	2	3	1	2	3	1	2	3	1	2	3	2	2	3	2	2	3	2	2	3	2	2	3	2
	25" thru 25-11/16"	2	3	1	2	3	1	2	3	1	2	3	2	2	3	2	2	3	2	2	3	2	2	3	2
	22" thru 24-15/16"	2	3	1	2	3	1	2	3	1	2	3	2	2	3	2	2	3	2	2	3	2	2	3	3
	19" thru 21-15/16" *	2	2	1	2	2	1	2	2	1	2	2	2	2	2	2	2	3	2	2	3	2	3	3	3
	16" thru 18-15/16"	2	2	1	2	2	1	2	2	1	2	2	2	2	2	2	3	2	2	3	2	3	3	3	3
	13" thru 15-15/16"	2	2	1	2	2	1	2	2	1	3	2	2	3	2	2	3	2	2	3	2	3	3	2	3
63"	32" (Equal-Lite)	2	3	1	2	3	1	2	3	1	2	3	2	2	3	2	2	3	2	2	4	2	3	4	3
	31" thru 31-15/16"	2	3	1	2	3	1	2	3	1	2	3	2	2	3	2	2	3	2	2	4	2	3	4	3
	28" thru 30-15/16"	2	3	1	2	3	1	2	3	1	2	3	2	2	3	2	3	3	2	3	4	3	3	4	3
	25" thru 27-15/16" *	2	3	1	2	3	1	2	3	1	3	3	2	3	3	2	3	3	2	3	3	3	3	4	3
	22" thru 24-15/16"	3	3	1	3	3	1	3	3	1	3	3	2	3	3	2	3	3	2	3	3	2	3	3	3
	19" thru 21-15/16"	3	2	1	3	2	1	3	2	1	3	2	2	3	2	2	3	2	2	3	2	2	3	3	3
	16" thru 18-15/16"	3	2	1	3	2	1	3	2	1	3	2	2	3	2	2	3	2	2	3	2	2	3	2	3
	13" thru 15-15/16"	3	2	1	3	2	1	3	2	1	3	2	2	3	2	2	3	2	2	4	2	2	4	2	3
73"	37" (Equal-Lite)	2	3	1	2	3	1	2	3	1	2	3	2	3	4	2	3	4	2	3	4	3	3	4	3
	34" thru 36-15/16"	3	3	1	3	3	1	3	3	1	3	3	2	3	3	2	3	3	2	3	4	2	3	4	3
	31" thru 33-15/16"	3	3	1	3	3	1	3	3	1	3	3	2	3	3	2	3	3	2	3	3	2	3	4	3
	28" thru 30-15/16" *	3	3	1	3	3	1	3	3	1	3	3	2	3	3	2	3	3	2	3	3	2	3	3	3
	25" thru 27-15/16"	3	3	1	3	3	1	3	3	1	3	3	2	3	3	2	3	3	2	3	3	2	4	3	3
	22" thru 24-15/16"	3	3	1	3	3	1	3	3	1	3	3	2	3	3	2	3	3	2	4	3	2	4	3	3
	19" thru 21-15/16"	3	2	1	3	2	1	3	2	1	3	2	2	3	2	2	4	2	2	4	2	2	4	3	3
	16" thru 18-15/16"	3	2	1	3	2	1	3	2	1	3	2	2	4	2	2	4	2	2	4	2	2	4	2	3
78"	39-1/2" (Equal-Lite)	2	3	1	2	3	1	2	3	1	3	3	2	3	4	2	3	4	2	3	4	3	3	5	3
	37" thru 39-7/16"	3	3	1	3	3	1	3	3	1	3	3	2	3	3	2	3	4	2	3	4	2	3	4	3
	34" thru 36-15/16"	3	3	1	3	3	1	3	3	1	3	3	2	3	3	2	3	3	2	3	4	2	3	4	3
	31" thru 33-15/16" *	3	3	1	3	3	1	3	3	1	3	3	2	3	3	2	3	3	2	3	3	2	3	4	3
	28" thru 30-15/16"	3	3	1	3	3	1	3	3	1	3	3	2	3	3	2	3	3	2	4	3	2	4	3	3
	25" thru 27-15/16"	3	3	1	3	3	1	3	3	1	3	3	2	3	3	2	4	3	2	4	3	2	4	3	3
	22" thru 24-15/16"	3	3	1	3	3	1	3	3	1	3	3	2	4	3	2	4	3	2	4	3	2	4	3	3
	20" thru 21-15/16"	3	2	1	3	2	1	3	2	1	3	2	2	4	2	2	4	2	2	4	2	2	4	3	3

* SASH HEIGHT RANGE INCLUDES THE STANDARD PROVIEW / ORIEL CONFIGURATION.

TABLE 4:

Anchor Group	Anchor	Substrate	Min. Edge Distance	Min. Embedment
B	#14, Steel SMS (G5) or #14, 410 SS SMS	P.T. Southern Pine (SG = .55)	9/16"	1-3/8"
		6063-T5 Alum	3/8"	1/8" **
		Steel Stud, Gr. 33 min.	3/8"	0.045 (18 Ga) **
		A36 Steel	3/8"	1/8" **
	1/4" CreteFlex	P.T. Southern Pine (SG = .55)	1"	1-3/4"
	5/16" Steel Ultracon	Hollow Block, (ASTM C90)	3-1/8"	1-1/4"

** MIMIMUM OF 3 THREADS BEYOND THE METAL SUBSTRATE.

FIGURE A: SASH CROSS SECTION (WITH INSULATED GLASS)

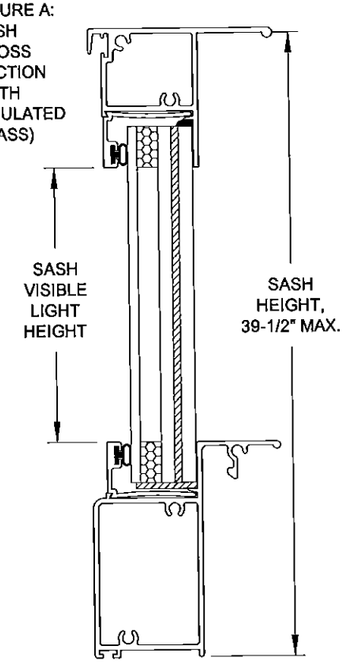

NOTES:

1) FOR BUCK DIMENSIONS, SUBTRACT 1" FROM WINDOW WIDTH OR HEIGHT.

2) "MR" = "MEETING RAIL"

3) FOR OVERALL SASH WIDTH, SUBTRACT 2-9/16" FROM THE WINDOW WIDTH.

4) FOR SIZES NOT SHOWN, ROUND UP TO THE NEXT AVAILABLE WIDTH OR HEIGHT DIMENSION SHOWN ON THE TABLE.

5) SEE SHEET 2 FOR INSTALLATION DETAILS.

SASH VISIBLE LIGHT FORMULAS:
WIDTH = WINDOW WIDTH - 4.875"
HEIGHT = SASH HEIGHT - 4.293"

FIXED VISIBLE LIGHT FORMULAS:
WIDTH = WINDOW WIDTH - 3.5"
HEIGHT = WINDOW HEIGHT - SASH HEIGHT - 3.336"

PRODUCT REVISED
as complying with the Florida Building Code
Acceptance No 15-0609.02
Expiration Date May 3, 2017
By Manuel Perez
Miami Dade Product Control

ANTHONY LYNN MILLER
LICENSE
No. 58705
STATE OF FLORIDA
PROFESSIONAL ENGINEER
5/29/15
A. LYNN MILLER, P.E.
P.E.# 58705

PGT®
1070 TECHNOLOGY DRIVE
N. VENICE, FL 34275
P.O. BOX 1529
NOKOMIS, FL 34274
CERT. OF AUTH. #29296

Revised By:	Date:	Revision:
SC	05/28/15	NO CHANGES

Description: ANCHOR QUANTITIES B
Drawn By: J ROSOWSKI
Title: SH WINDOW - LARGE MISSILE
Date: 11/11/11
Series/Model: SH-800
Scale: NTS
Sheet: 4 OF 7
Drawing No. MD-SH800LM-01
Rev: A

TABLE 5:

ANCHOR QUANTITIES REQUIRED - Group C Anchors

Overall Window Height	Sash Height or Height Range	Overall Window Width: 19-1/8" Jamb Above MR	19-1/8" Jamb Below MR	19-1/8" Header	26-1/2" Jamb Above MR	26-1/2" Jamb Below MR	26-1/2" Header	33" Jamb Above MR	33" Jamb Below MR	33" Header	37" Jamb Above MR	37" Jamb Below MR	37" Header	41" Jamb Above MR	41" Jamb Below MR	41" Header	45" Jamb Above MR	45" Jamb Below MR	45" Header	49" Jamb Above MR	49" Jamb Below MR	49" Header	53-1/8" Jamb Above MR	53-1/8" Jamb Below MR	53-1/8" Header
24-1/2"	12-3/4" (Equal-Lite)	1	2	1	1	2	1	1	2	1	1	2	1	1	2	2	1	2	2	1	2	2	1	2	2
25-1/2"	13-1/4" (Equal-Lite)	1	2	1	1	2	1	1	2	1	1	2	1	1	2	2	1	2	2	1	2	2	1	2	2
37"	19" (Equal-Lite)	2	2	1	2	2	1	2	2	1	2	2	1	2	2	2	2	2	2	2	2	2	2	2	2
38-3/8"	19-5/8" (Equal-Lite)	2	2	1	2	2	1	2	2	1	2	2	1	2	2	2	2	2	2	2	2	2	2	2	2
	19" thru 19-9/16"	2	2	1	2	2	1	2	2	1	2	2	1	2	2	2	2	2	2	2	2	2	2	2	2
	16" thru 18-15/16" *	2	2	1	2	2	1	2	2	1	2	2	1	2	2	2	2	2	2	2	2	2	2	2	2
	13" thru 15-15/16"	2	2	1	2	2	1	2	2	1	2	2	1	2	2	2	2	2	2	2	2	2	2	2	2
45"	23" (Equal-Lite)	2	2	1	2	2	1	2	2	1	2	2	1	2	2	2	2	2	2	2	2	2	2	2	2
	22" thru 22-15/16"	2	2	1	2	2	1	2	2	1	2	2	1	2	2	2	2	2	2	2	2	2	2	2	2
	19" thru 21-15/16" *	2	2	1	2	2	1	2	2	1	2	2	1	2	2	2	2	2	2	2	2	2	2	2	2
	16" thru 18-15/16"	2	2	1	2	2	1	2	2	1	2	2	1	2	2	2	2	2	2	2	2	2	2	2	2
	13" thru 15-15/16"	2	2	1	2	2	1	2	2	1	2	2	1	2	2	2	2	2	2	2	2	2	2	2	2
50-5/8"	25-3/4" (Equal-Lite)	2	3	1	2	3	1	2	3	1	2	3	1	2	3	2	2	3	2	2	3	2	2	3	2
	25" thru 25-11/16"	2	3	1	2	3	1	2	3	1	2	3	1	2	3	2	2	3	2	2	3	2	2	3	2
	22" thru 24-15/16"	2	3	1	2	3	1	2	3	1	2	3	1	2	3	2	2	3	2	2	3	2	2	3	2
	19" thru 21-15/16" *	2	2	1	2	2	1	2	2	1	2	2	1	2	2	2	2	2	2	2	2	2	2	2	2
	16" thru 18-15/16"	2	2	1	2	2	1	2	2	1	2	2	1	2	2	2	2	2	2	2	2	2	2	2	2
	13" thru 15-15/16"	2	2	1	2	2	1	2	2	1	2	2	1	2	2	2	2	2	2	2	2	2	2	2	2
63"	32" (Equal-Lite)	2	3	1	2	3	1	2	3	1	2	3	1	2	3	2	2	3	2	2	3	2	2	3	2
	31" thru 31-15/16"	2	3	1	2	3	1	2	3	1	2	3	1	2	3	2	2	3	2	2	3	2	2	3	2
	28" thru 30-15/16"	2	3	1	2	3	1	2	3	1	2	3	1	2	3	2	2	3	2	2	3	2	2	3	2
	25" thru 27-15/16" *	2	3	1	2	3	1	2	3	1	2	3	1	2	3	2	2	3	2	2	3	2	2	3	2
	22" thru 24-15/16"	3	3	1	3	3	1	3	3	1	3	3	1	3	3	2	3	3	2	3	3	2	3	3	2
	19" thru 21-15/16"	3	2	1	3	2	1	3	2	1	3	2	1	3	2	2	3	2	2	3	2	2	3	2	2
	16" thru 18-15/16"	3	2	1	3	2	1	3	2	1	3	2	1	3	2	2	3	2	2	3	2	2	3	2	2
	13" thru 15-15/16"	3	2	1	3	2	1	3	2	1	3	2	1	3	2	2	3	2	2	3	2	2	3	2	2
73"	37" (Equal-Lite)	2	3	1	2	3	1	2	3	1	2	3	1	2	3	2	2	3	2	2	3	2	2	3	2
	34" thru 36-15/16"	3	3	1	3	3	1	3	3	1	3	3	1	3	3	2	3	3	2	3	3	2	3	3	2
	31" thru 33-15/16"	3	3	1	3	3	1	3	3	1	3	3	1	3	3	2	3	3	2	3	3	2	3	3	2
	28" thru 30-15/16" *	3	3	1	3	3	1	3	3	1	3	3	1	3	3	2	3	3	2	3	3	2	3	3	2
	25" thru 27-15/16"	3	3	1	3	3	1	3	3	1	3	3	1	3	3	2	3	3	2	3	3	2	3	3	2
	22" thru 24-15/16"	3	3	1	3	3	1	3	3	1	3	3	1	3	3	2	3	3	2	3	3	2	3	3	2
	19" thru 21-15/16"	3	2	1	3	2	1	3	2	1	3	2	1	3	2	2	3	2	2	3	2	2	3	2	2
	16" thru 18-15/16"	3	2	1	3	2	1	3	2	1	3	2	1	3	2	2	3	2	2	3	2	2	3	2	2
78"	39-1/2" (Equal-Lite)	2	3	1	2	3	1	2	3	1	2	3	1	2	3	2	2	3	2	2	3	2	2	4	2
	37" thru 39-7/16"	3	3	1	3	3	1	3	3	1	3	3	1	3	3	2	3	3	2	3	3	2	3	3	2
	34" thru 36-15/16"	3	3	1	3	3	1	3	3	1	3	3	1	3	3	2	3	3	2	3	3	2	3	3	2
	31" thru 33-15/16" *	3	3	1	3	3	1	3	3	1	3	3	1	3	3	2	3	3	2	3	3	2	3	3	2
	28" thru 30-15/16"	3	3	1	3	3	1	3	3	1	3	3	1	3	3	2	3	3	2	3	3	2	3	3	2
	25" thru 27-15/16"	3	3	1	3	3	1	3	3	1	3	3	1	3	3	2	3	3	2	3	3	2	3	3	2
	22" thru 24-15/16"	3	3	1	3	3	1	3	3	1	3	3	1	3	3	2	3	3	2	3	3	2	3	3	2
	20" thru 21-15/16"	3	2	1	3	2	1	3	2	1	3	2	1	3	2	2	3	2	2	3	2	2	3	2	2

* SASH HEIGHT RANGE INCLUDES THE STANDARD PROVIEW / ORIEL CONFIGURATION.

TABLE 6:

Anchor Group	Anchor	Substrate	Min. Edge Distance	Min. Embedment
C	1/4" Steel Ultracon	Concrete (min. 2.9 ksi)	2-1/2"	1-3/8"
	1/4" CreteFlex	Concrete (min. 3.35 ksi)	2-1/2"	1-3/4"
	5/16" Steel Ultracon	Concrete (min. 3.5 ksi)	2-3/16"	1-3/4"
		Grouted-filled Block, (ASTM C90)	2-1/2"	1-3/4"

REMOVED HOLLOW BLOCK OPTIONS — A

FIGURE A: SASH CROSS SECTION (WITH INSULATED GLASS)

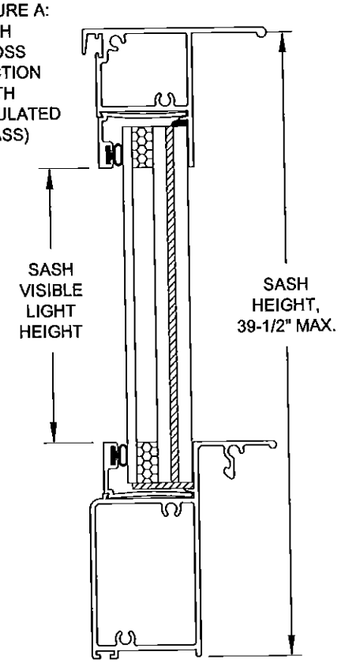

NOTES:

1) FOR BUCK DIMENSIONS, SUBTRACT 1" FROM WINDOW WIDTH OR HEIGHT.

2) "MR" = "MEETING RAIL"

3) FOR OVERALL SASH WIDTH, SUBTRACT 2-9/16" FROM THE WINDOW WIDTH.

4) FOR SIZES NOT SHOWN, ROUND UP TO THE NEXT AVAILABLE WIDTH OR HEIGHT DIMENSION SHOWN ON THE TABLE.

5) SEE SHEET 2 FOR INSTALLATION DETAILS.

SASH VISIBLE LIGHT FORMULAS:
WIDTH = WINDOW WIDTH - 4.875"
HEIGHT = SASH HEIGHT - 4.293"

FIXED VISIBLE LIGHT FORMULAS:
WIDTH = WINDOW WIDTH - 3.5"
HEIGHT = WINDOW HEIGHT - SASH HEIGHT - 3.336"

PRODUCT REVISED
as complying with the Florida Building Code
Acceptance No 15-0609.02
Expiration Date May 3, 2017
By Manuel Perez
Miami Dade Product Control

ANTHONY LYNN MILLER LICENSE No. 58705 STATE OF FLORIDA PROFESSIONAL ENGINEER
5/28/15
A. LYNN MILLER, P.E.
P.E.# 58705

PGT®
1070 TECHNOLOGY DRIVE
N. VENICE, FL 34275
P.O. BOX 1529
NOKOMIS, FL 34274
CERT. OF AUTH. #29296

Revised By:	Date:	Revision:
SC	05/28/15	TABLE 6

Description: ANCHOR QUANTITIES C
Drawn By: J ROSOWSKI
Title: SH WINDOW - LARGE MISSILE
Date: 11/11/11
Series/Model: SH-800
Scale: NTS
Sheet: 5 OF 7
Drawing No. MD-SH800LM-01
Rev: A

TABLE 7:

Item	Dwg. #	Part #	Description	Material
1	4002A	612225W	Frame Head	6063-T6
2	4050D	64050DW	Frame Hi-Rise Sill	6063-T6
3	4004	612227W	Frame Jamb	6063-T6
5	4054B	64054BW	Fixed Meeting Rail	6063-T6
7	4006D	64006W	Sash Top Rail	6063-T6
8	4009	764009W	Sill Lock	6063-T5
11	4051A	64051W	Sash Bottom Rail - Hi-Rise	6063-T6
12	4008	612231W	Sash Side Rail	6063-T5
13	1155	781PQA	#8 x 1" Quad Pn. SMS	Steel or 410 SS
16	1016	7858WW	#8 x 5/8" Ph. Fl. SMS	Steel
17	4087	44087AWR	Sash Bottom Rail End Cap	Rigid PVC
19	4081	64081W	Head Fastener Cover (Opt.)	6063-T6
21	1096	71797W	Top Sweep Latch	Cast Zinc
22	4080B	74080BK	Mtg Rail Sweep Latch Plug	Rigid PVC
23	1088	7SPRNG	Sill Latch Spring	Spring Steel
24	1226D	61226DW	Wstp., Bulb Vinyl (@ Sash Bottom Rail)	Flex PVC 70
25	1235	67S16G	.170" x .270" Fin Seal	
26	4066	64066G	.187" x .230" Fin Seal	
27	1062	61062G	.187" x .270" Fin Seal	
28	1626	7PAD1627	Adhesive Open Cell Foam Pad	Polyethylene
29		74087	Hi-Rise Sill Gasket	Polyethylene
30	4076D	74076DW	Head Gasket	Polyethylene
31	4053	64053W	Sash Stop Cover (All Balances)	6063-T5
32	1080	6BALCVR916W	Balance Cover (All Balances)	Rigid Vinyl
34		75831KEZ	Caldwell EZ-Lift Balance	
35		7834AA	#8 x 3/4" PH PN (EZ-Lift)	Steel
36	4085	44085WR	Sash Cover Guide (EZ-Lift)	Vinyl
38			Caldwell Ultra-Lift Balance (Sash > 55 lbs)	
39		78X1FPAX	#8 x 1" Ph. Fl. St. Stl. (Ultra-Lift)	410 SS
40	1086	44086WR	Sash Cover Guide (Ultra-Lift)	Vinyl
41	4029-1	7ULBRKT	Sash Bracket (Ultra-Lift)	Steel
42		7832X12FPFX	#8-32 x 1/2" PH FL SS (Ultra-Lift)	410 SS
44		6DURAK14	Duraseal - 1/4" (IG Only)	
45	1622	71622K	Lami Setting Block 3/32" x 25/64" x 1"	Neoprene, 85 duro
46	1715	71715K	IG Setting Block 1/8" x 3/4" x 1-1/14"	Neoprene, 85 duro
48	4222-1A	64222AW	7/16" Lami Glazing Bead	6063-T5
49	4039-1A	64039BW	13/16" Lami IG Glazing Bead	6063-T5
50	1224	6TP247W	Bulb Bead Weatherstrip, IG	Polyethylene
51	1225	6TP248K	Bulb Bead Weatherstrip	Polyethylene
52	134	66615W	Add-on Flange (Opt.)	6063-T6
53	1014E	61014FW	Screen Frame	Aluminum
54	1630	47042W	Screen Corner Key w/Rings	Vinyl
55	1631	47041W	Screen Corner Key w/out Rings	Vinyl
56	320B	7320SPNG	Screen Spring	Spring Steel
57	1624	61624K	Screen Spline - .135 Dia. Foam	Rubber
58		61635K	Screen Spline - .135 Dia. Hard	Rubber
59		61816C34	Screen Cloth	Fiberglass
61		Dow Corning 899 Silicone Glazing Sealant or Equiv.		
93		3/16" HS - .090" SentryGlas Interlayer - 3/16" HS		
94		1/8" T - 1/4" Air - 3/16" HS - .090" SentryGlas Interlayer - 3/16" HS		

GLAZING NOTES:

SENTRYGLAS® BY KURARAY AMERICA, INC.

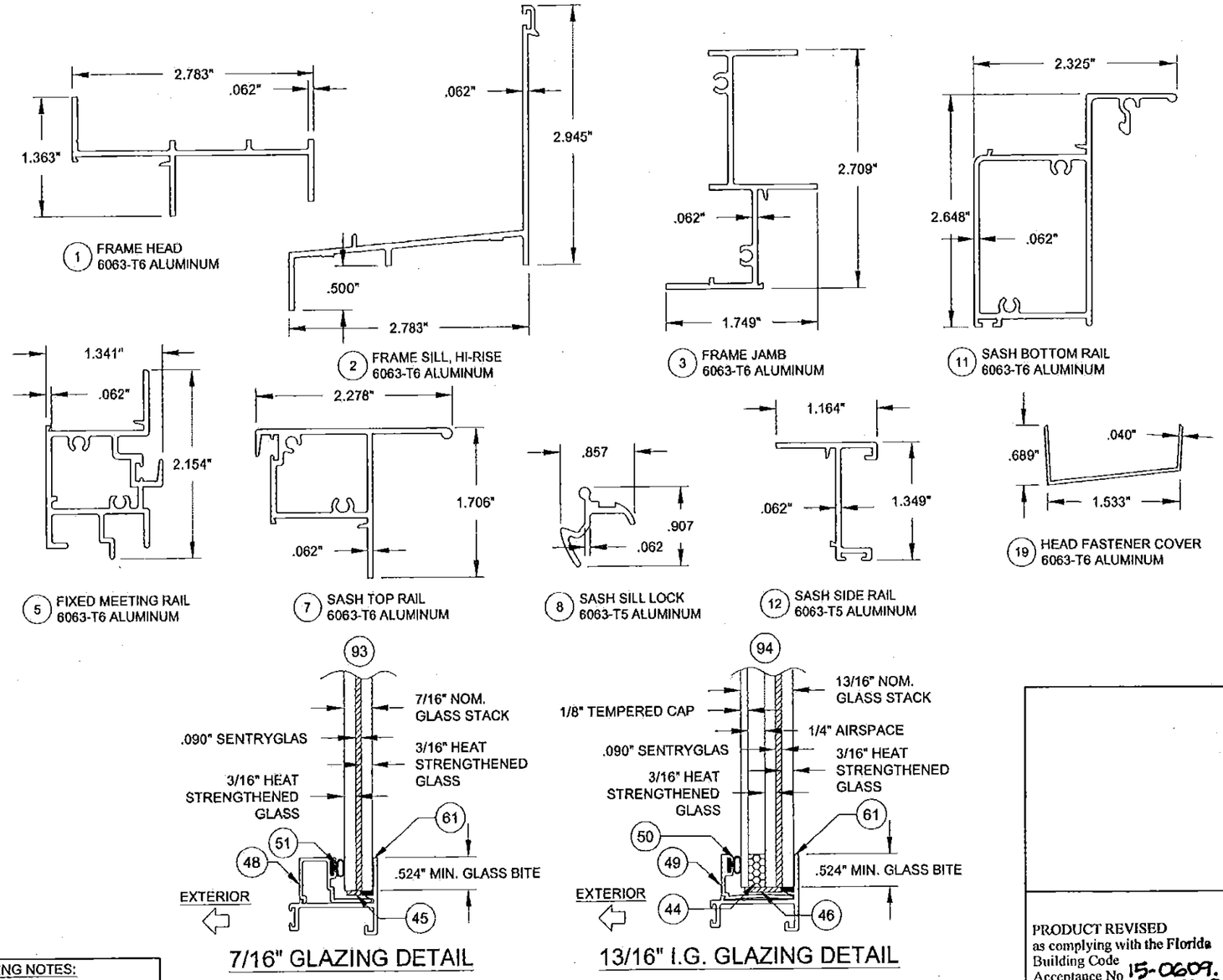

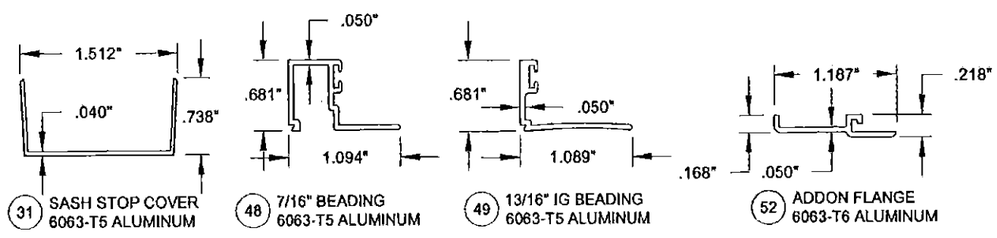

ANTHONY LYNN MILLER LICENSE No. 58705 STATE OF FLORIDA PROFESSIONAL ENGINEER
5/29/15
A. LYNN MILLER, P.E.
P.E.# 58705

PGT®
1070 TECHNOLOGY DRIVE
N. VENICE, FL 34275
P.O. BOX 1529
NOKOMIS, FL 34274
CERT. OF AUTH. #29296

PRODUCT REVISED
as complying with the Florida Building Code
Acceptance No 15-0609.02
Expiration Date May 3, 2017
By Manuel Perez
Miami-Dade Product Control

Revised By:	Date:	Revision:
SC	05/28/15	NO CHANGES

Description: BOM & PART DETAILS				Drawn By: J ROSOWSKI
Title: SH WINDOW - LARGE MISSILE				Date: 11/11/11
Series/Model: SH-800	Scale: NTS	Sheet: 6 OF 7	Drawing No. MD-SH800LM-01	Rev: A

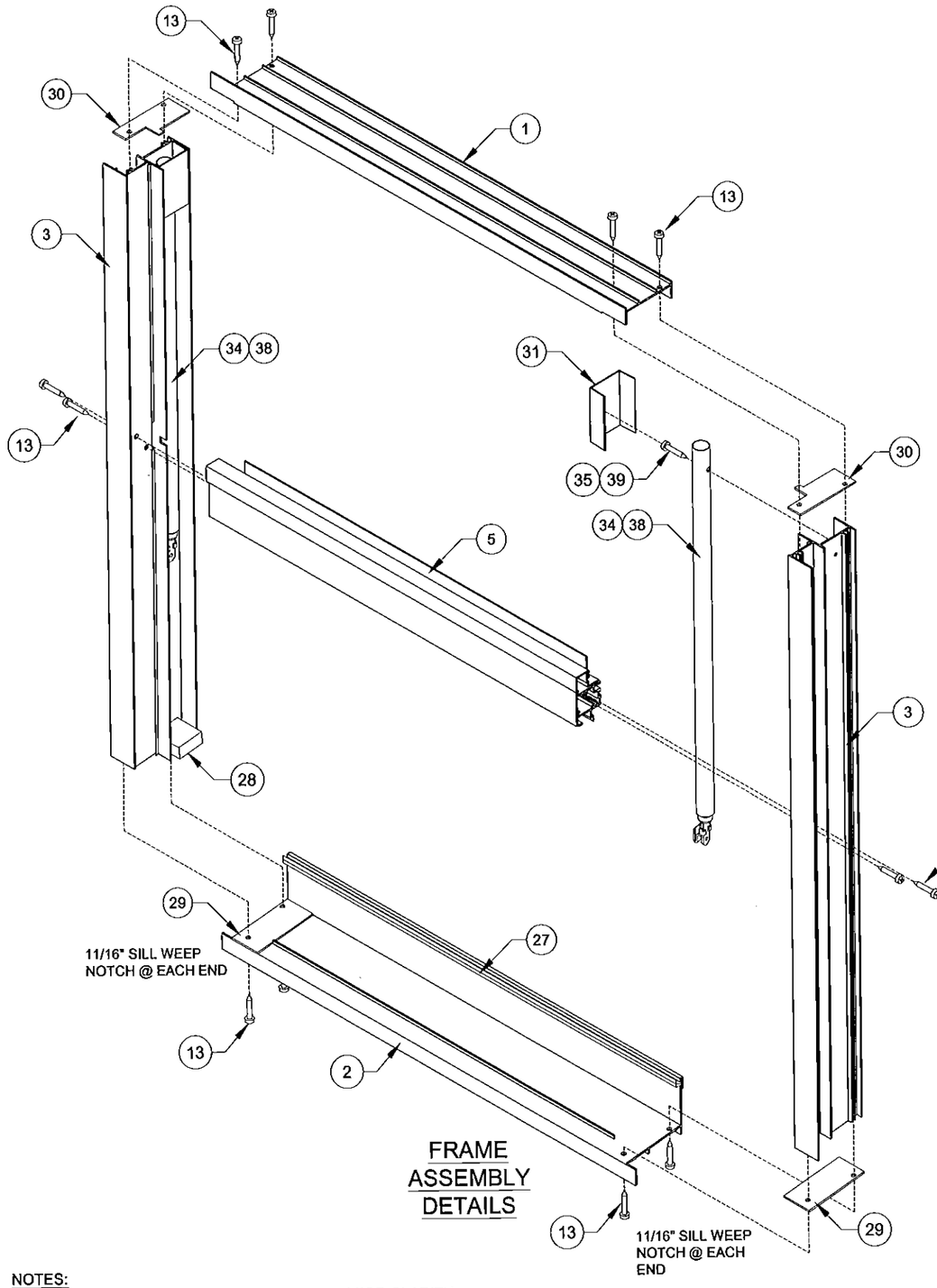

FRAME
ASSEMBLY
DETAILS

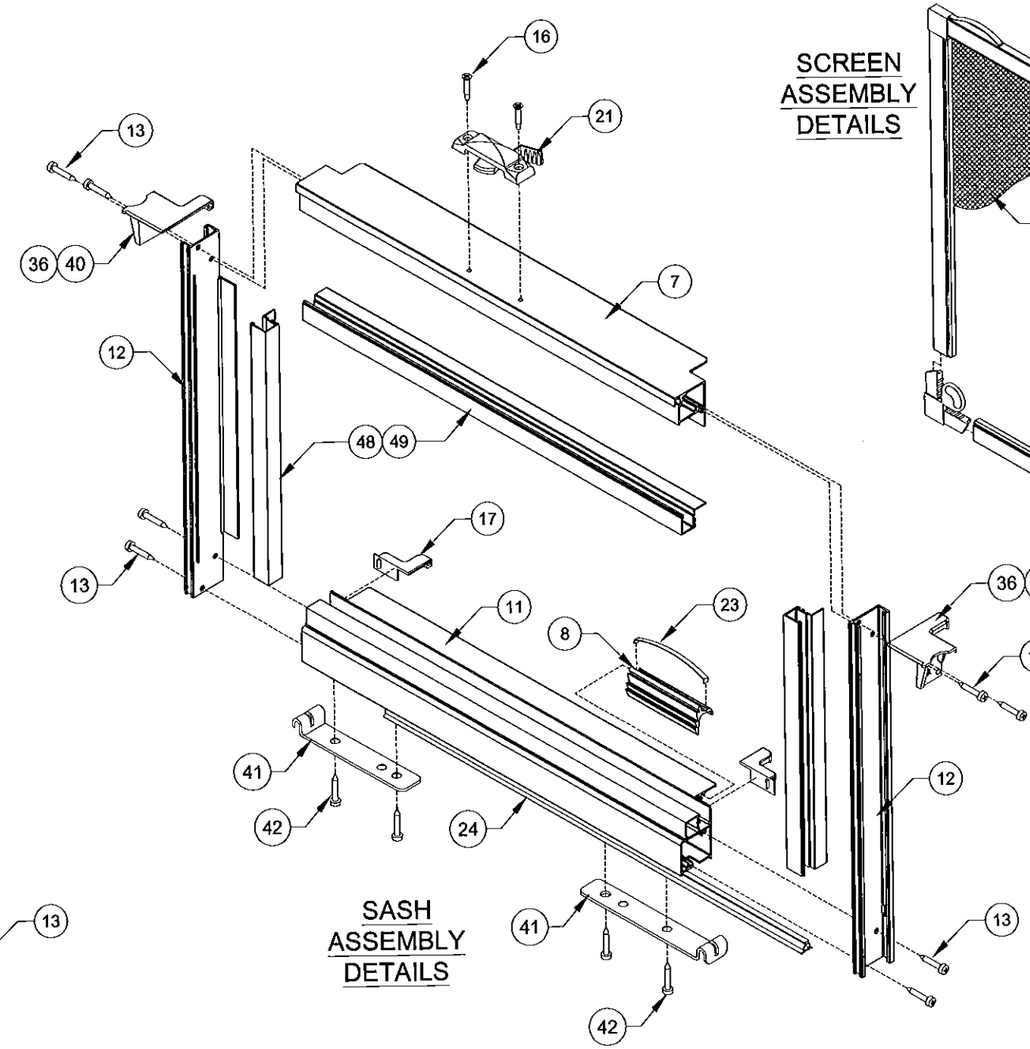

SASH
ASSEMBLY
DETAILS

SCREEN
ASSEMBLY
DETAILS

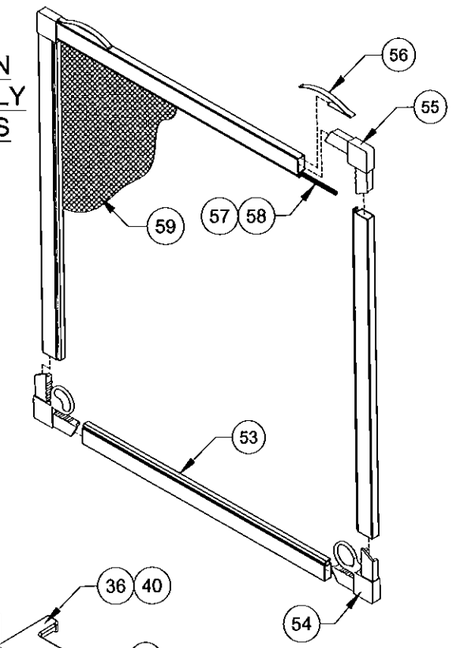

NOTES:
1) GLASS & FIXED LITE BEADING NOT SHOWN FOR CLARITY.
2) HARDWARE FOR BOTH TYPES OF BALANCES SHOWN.
REFER TO TABLE 7, SHEET 6 FOR SPECIFIC HARDWARE
REQUIREMENTS USED FOR EACH BALANCE TYPE.

ANTHONY LYNN MILLER
LICENSE
No. 58705
5/29/15
STATE OF
FLORIDA
PROFESSIONAL ENGINEER

A. LYNN MILLER, P.E.
P.E.# 58705

PGT®

1070 TECHNOLOGY DRIVE
N. VENICE, FL 34275
P.O. BOX 1529
NOKOMIS, FL 34274

CERT. OF AUTH. #29296

PRODUCT REVISED
as complying with the Florida
Building Code
Acceptance No 15-0609.02
Expiration Date May 3, 2017
By Manuel Perez
Miami Dade Product Control

Revised By:	Date:	Revision:
SC	05/28/15	NO CHANGES

Description: ASSEMBLY DETAILS				Drawn By: J ROSOWSKI
Title: SH WINDOW - LARGE MISSILE				Date: 11/11/11
Series/Model: SH-800	Scale: NTS	Sheet: 7 OF 7	Drawing No. MD-SH800LM-01	Rev: A