MIAMI-DADE COUNTY
DEPARTMENT OF REGULATORY AND ECONOMIC RESOURCES (RER)
BOARD AND CODE ADMINISTRATION DIVISION

MIAMI-DADE COUNTY
PRODUCT CONTROL SECTION
11805 SW 26 Street, Room 208
T (786) 315-2590 F (786) 315-2599
www.miamidade.gov/economy

NOTICE OF ACCEPTANCE (NOA)

PGT Industries, Inc.
1070 Technology Drive
North Venice, FL 34275

SCOPE:

This NOA is being issued under the applicable rules and regulations governing the use of construction materials. The documentation submitted has been reviewed and accepted by Miami-Dade County RER - Product Control Section to be used in Miami Dade County and other areas where allowed by the Authority Having Jurisdiction (AHJ).

This NOA shall not be valid after the expiration date stated below. The Miami-Dade County Product Control Section (In Miami-Dade County) and/or the AHJ (in areas other than Miami-Dade County) reserve the right to have this product or material tested for quality assurance purposes. If this product or material fails to perform in the accepted manner, the manufacturer will incur the expense of such testing and the AHJ may immediately revoke, modify, or suspend the use of such product or material within their jurisdiction. RER reserves the right to revoke this acceptance, if it is determined by Miami–Dade County Product Control Section that this product or material fails to meet the requirements of the applicable building code.

This product is approved as described herein, and has been designed to comply with the Florida Building Code, including the High Velocity Hurricane Zone.-

DESCRIPTION: Series "SGD-2500 Dry-Glazed" Aluminum Horizontal Sliding Window - N. I.

APPROVAL DOCUMENT: Drawing No. **757-1**, titled "Alum. Sliding Glass Window, Non-Impact", sheets 1 through 18 of 18, dated 09/08/04, with revision **L** dated 05/28/15, prepared by manufacturer, signed and sealed by Anthony Lynn Miller, P.E., bearing the Miami-Dade County Product Control Revision stamp with the Notice of Acceptance number and expiration date by the Miami-Dade County Product Control Section.

MISSILE IMPACT RATING: None.

LABELING: Each unit shall bear a permanent label with the manufacturer's name or logo, city, state, model/series, and following statement: "Miami-Dade County Product Control Approved", unless otherwise noted herein.

RENEWAL of this NOA shall be considered after a renewal application has been filed and there has been no change in the applicable building code negatively affecting the performance of this product.

TERMINATION of this NOA will occur after the expiration date or if there has been a revision or change in the materials, use, and/or manufacture of the product or process. Misuse of this NOA as an endorsement of any product, for sales, advertising or any other purposes shall automatically terminate this NOA. Failure to comply with any section of this NOA shall be cause for termination and removal of NOA.

ADVERTISEMENT: The NOA number preceded by the words Miami-Dade County, Florida, and followed by the expiration date may be displayed in advertising literature. If any portion of the NOA is displayed, then it shall be done in its entirety.

INSPECTION: A copy of this entire NOA shall be provided to the user by the manufacturer or its distributors and shall be available for inspection at the job site at the request of the Building Official.

This NOA **revises NOA# 12-0730.01** and consists of this page 1 and evidence pages E-1, E-2 and E-3, as well as approval document mentioned above.

The submitted documentation was reviewed by **Manuel Perez, P.E.**

MIAMI-DADE COUNTY APPROVED

8/14/15

PGT Industries, Inc.

NOTICE OF ACCEPTANCE: EVIDENCE SUBMITTED

A. DRAWINGS

1. Manufacturer's die drawings and sections.
   (Submitted under NOA No. 07-0403.01, 04-1220.05, 02-0701.03 & 96-1023.03)
2. Drawing No. **757-1**, titled "Alum. Sliding Glass Window, Non-Impact", sheets 1 through 18 of 18, dated 09/08/04, with revision L dated 05/28/15, prepared by manufacturer, signed and sealed by Anthony Lynn Miller, P.E.

B. TESTS

1. Test reports on: 1) Air Infiltration Test, per FBC, TAS 202-94
   2) Uniform Static Air Pressure Test, Loading per FBC, TAS 202-94
   3) Water Resistance Test, per FBC, TAS 202-94
   4) Forced Entry Test, per FBC 2411.3.2.1, and TAS 202-94

   along with marked-up drawings and installation diagram of a dry-glazed aluminum horizontal sliding window, prepared by Fenestration Testing Laboratory, Inc., Test Report No. **FTL-5095**, dated 12/13/06, signed and sealed by Edmundo J. Largaespada, P.E. ***(Submitted under NOA No. 07-0403.01)***
2. Test reports on: 1) Air Infiltration Test, per FBC, TAS 202-94
   2) Uniform Static Air Pressure Test, Loading per FBC, TAS 202-94
   3) Water Resistance Test, per FBC, TAS 202-94
   4) Forced Entry Test, per FBC 2411.3.2.1, and TAS 202-94

   along with marked-up drawings and installation diagram of a dry-glazed aluminum sliding glass window, prepared by Fenestration Testing Laboratory, Inc., Test Reports No. **FTL-3117**, **FTL-3102**, **FTL-3596**, **FTL-4341**, **FTL-4273**, **FTL-4275**, **FTL-4277**, **FTL-4278**, **FTL-4280** and **FTL-4285**, dated 07/23-22-26/04 9/19-28/04, all signed and sealed by Edmundo J. Largaespada, P.E.
   (Submitted under NOA No. 04-1220.05)
3. Test reports on: 1) Air Infiltration Test, per FBC, TAS 202-94
   2) Uniform Static Air Pressure Test, Loading per FBC, TAS 202-94
   3) Water Resistance Test, per FBC, TAS 202-94
   4) Forced Entry Test, per FBC 2411.3.2.1, and TAS 202-94

   along with marked-up drawings and installation diagram of a dry-glazed aluminum sliding glass window, prepared by Fenestration Testing Laboratory, Inc., Test Reports No. **FTL-3102** and **FTL-3116**, dated 06/18-19/01 signed and sealed by Edmundo J. Largaespada, P.E. ***(Submitted under NOA No. 02-1701.03)***

Manuel Perez

Manuel Perez, P.E.
Product Control Examiner
NOA No. 15-0609.09
Expiration Date: May 22, 2018
Approval Date: August 20 2015

NOTICE OF ACCEPTANCE: EVIDENCE SUBMITTED

B. TESTS (CONTINUED)

4. Test reports on: 1) Air Infiltration Test, per SBC, PA 202–94
2) Uniform Static Air Pressure Test, Loading per FBC, TAS 202-94
3) Water Resistance Test, per FBC, TAS 202-94
4) Forced Entry Test, per FBC 2411.3.2.1, and TAS 202-94
along with marked-up drawings and installation diagram of a dry-glazed aluminum sliding glass window, prepared by Fenestration Testing Laboratory, Inc., Test Reports No. **FTL-1381**, dated 09/16/96 signed and sealed by Gilbert Diamond, P.E.
(Submitted under NOA No. 96-1023.03)

C. CALCULATIONS

1. Anchor verification calculations and structural analysis, complying with **FBC-5th Edition (2014)**, dated 05/29/15, prepared by manufacturer, signed and sealed by Anthony Lynn Miller, P.E.

2. Glazing complies with **ASTM E1300-04**

D. QUALITY ASSURANCE

1. Miami-Dade Department of Regulatory and Economic Resources (RER).

E. MATERIAL CERTIFICATIONS

1. None.

F. STATEMENTS

1. Statement letter of conformance, complying with **FBC-5th Edition (2014)**, dated May 29, 2015, issued by manufacturer, signed and sealed by Anthony Lynn Miller, P.E.

2. Statement letter of no financial interest, dated May 29, 2015, issued by manufacturer, signed and sealed by Anthony Lynn Miller, P.E.

3. Laboratory compliance letter for Test Report No. **FTL-5095**, issued by Fenestration Testing Laboratory, Inc., dated 12/13/06, signed and sealed by Edmundo J. Largaespada, P.E.
(Submitted under previous NOA No. 07–0403.01)

4. Laboratory compliance letter for Test Reports No. **FTL-3117**, **FTL-3102**, **FTL-3596**, **FTL-4341**, **FTL-4273**, **FTL-4275**, **FTL-4277**, **FTL-4278**, **FTL-4280** and **FTL-4285**, issued by Fenestration Testing Laboratory, Inc., dated 09/28/04, all signed and sealed by Edmundo J. Largaespada, P.E.
(Submitted under previous NOA No. 04–1220.05)

Manuel Perez, P.E.
Product Control Examiner
NOA No. 15-0609.09
Expiration Date: May 22, 2018
Approval Date: August 20 2015

NOTICE OF ACCEPTANCE: EVIDENCE SUBMITTED

F. STATEMENTS (CONTINUED)

5. Laboratory compliance letter for Test Reports No. **FTL-3102** and **FTL-3116**, issued by Fenestration Testing Laboratory, Inc., dated 06/19/01, all signed and sealed by Luis Figueredo, P.E.
   (Submitted under NOA No. 02-0701.03)
6. Laboratory compliance letter for Test Report No. **FTL-1381**, issued by Fenestration Testing Laboratory, Inc., dated 09/16/96, signed and sealed by Gilbert diamond, P.E.
   (Submitted under previous NOA No. 96-0701.03)

G. OTHERS

1. Notice of Acceptance No. **12-0730.01**, issued to PGT Industries for their Series "SGD-2500 Dry-Glazed" Aluminum Horizontal Sliding Window - N.I." approved on 10/18/12 and expiring on 05/22/18.

Manuel Perez, P.E.
Product Control Examiner
NOA No. 15-0609.09
Expiration Date: May 22, 2018
Approval Date: August 20 2015

GENERAL NOTES: NON-IMPACT SLIDING GLASS WINDOW

1. GLAZING OPTIONS:
   A. 3/16" ANNEALED GLASS. 60" HIGH COUNTER TOP APPLICATION ONLY, TEST REPORT FTL-4278.
   B. 3/16" TEMPERED GLASS. TEST REPORTS FTL-3116, FTL3117, FTL-4277 AND FTL-5095.
   C. 1/4" TEMPERED GLASS. TEST REPORT FTL-3102.
   D. 5/8" INSULATED GLASS (I.G.); (2) LITES OF 3/16" TEMPERED GLASS WITH A 1/4" AIR SPACE. TEST REPORTS FTL-4273, FTL-4275, FTL-4280, FTL-4285 AND FTL-4341.
2. CONFIGURATIONS: SEE SHEET 4.
3. DESIGN PRESSURES: SEE TABLES 1-3 ON SHEETS 2 AND 3.
   A. NEGATIVE DESIGN LOADS BASED ON TESTED PRESSURE AND GLASS TABLES ASTM E 1300.
   B. POSITIVE DESIGN LOADS BASED ON WATER TEST PRESSURE AND GLASS TABLES ASTM E 1300.
4. ANCHORAGE: THE 33 1/3% STRESS INCREASE HAS NOT BEEN USED IN THE DESIGN OF THIS PRODUCT. MATERIALS, INCLUDING BUT NOT LIMITED TO STEEL SCREWS, THAT COME INTO CONTACT WITH OTHER DISSIMILAR MATERIALS SHALL MEET THE REQUIREMENTS OF THE FBC. FOR ANCHORAGE DETAILS, SEE SHEETS 15 AND 18.
5. MIAMI-DADE COUNTY APPROVED SHUTTERS ARE REQUIRED IN MIAMI-DADE COUNTY AND WHERE IMPACT RESISTANCE IS REQUIRED.
6. INSTALLATION SCREWS, FRAME AND PANEL CORNERS SEALED WITH SCHNEE/MOREHEAD SEAM SEALER.
7. REFERENCES: TEST REPORTS FTL-3102, FTL-3116, FTL-3117, FTL-3596, FTL-4273, FTL-4275, FTL-4277, FTL-4278, FTL-4280, FTL-4285, FTL-4341 AND 5095.
   >ELCO ULTRACON AND CRETEFLEX NOA'S
   >ANSI/AF&PA NDS FOR WOOD CONSTRUCTION
   >ALUMINUM DESIGN MANUAL
8. THIS PRODUCT HAS BEEN DESIGNED & TESTED TO COMPLY WITH THE REQUIREMENTS OF THE FLORIDA BUILDING CODE, INCLUDING THE HIGH VELOCITY HURRICANE ZONE (HVHZ).

NOA DRAWING MAP

	SHEET
GENERAL NOTES	1
GLAZING DETAILS	1
DESIGN PRESSURES	2-3
CONFIGURATIONS	4
ELEVATIONS	5
VERT. SECTIONS	6
HORIZ. SECTIONS	7-9
"X" & "O" CLIP INSTALL	10
PARTS LIST	11
EXTRUSIONS	12-14
ANCHORAGE	15-18

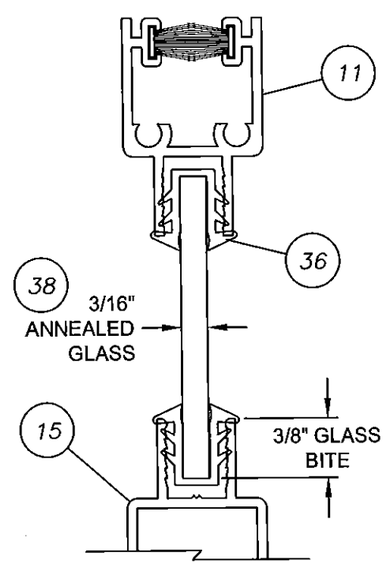

3/16" MONOLITHIC GLASS
GLASS TYPE A

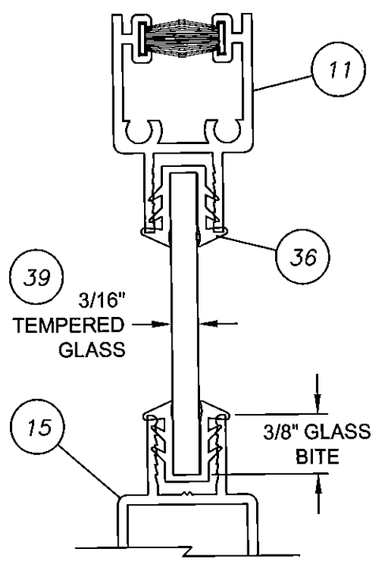

3/16" MONOLITHIC GLASS
GLASS TYPE B

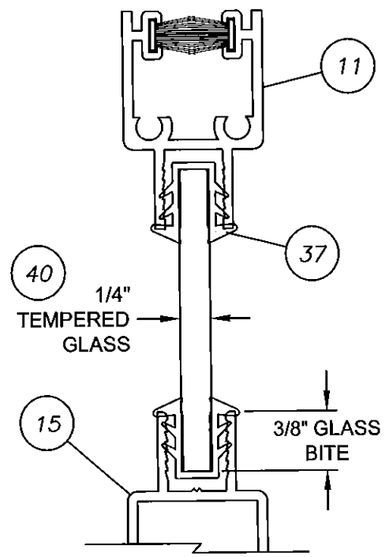

1/4" MONOLITHIC GLASS
GLASS TYPE C

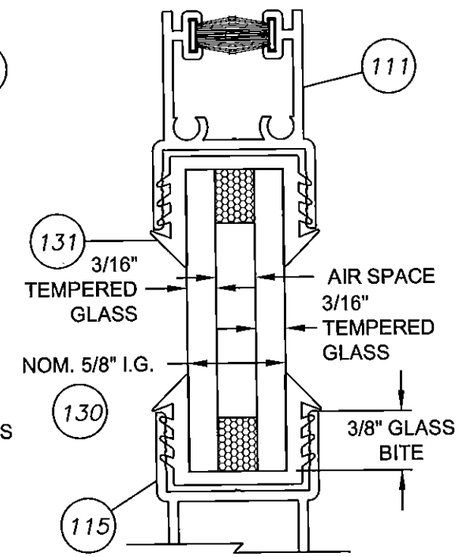

5/8" I.G. GLASS
GLASS TYPE D

PRODUCT REVISED
as complying with the Florida
Building Code
Acceptance No 15-0609.09
Expiration Date May 22, 2018
By Manuel Perez
Miami Dade Product Control

ANTHONY LYNN MILLER
LICENSE
No. 58705
5/29/15
STATE OF FLORIDA
PROFESSIONAL ENGINEER
A. LYNN MILLER, P.E.
P.E.# 58705

Revsd By:	Date:	Revisions:	
F.K.	10/22/07	J	NO CHANGES THIS SHEET
J.J.	10/14/11	K	FBC 2010 CODE CHANGE
L.M.	5/28/15	L	5th EDITION FBC (2014) CODE UPDATE, REMOVE E1300 EDITION, ANCHOR NOA NUMBERS AND ADM/NDS EDITION YEARS
Drawn By: F.K.	Date: 09/08/04	Checked By: J.J.	Date: 04/02/06

1070 TECHNOLOGY DRIVE
NOKOMIS, FL 34275
P.O. BOX 1529
NOKOMIS, FL 34274

PGT Visibly Better

Description: NOTES, GLAZING DETAILS & MAP
Title: ALUM. SLIDING GLASS WINDOW, NON-IMPACT

Series/Model:	Scale:	Sheet:	Drawing No.	Rev:
SGD2500	NTS	1 of 18	757-1	L

COMPARATIVE ANALYSIS:

>EXTENDED SILL, 2 1/2" HIGH

>SINGLE/SINGLE INTERLOCK

>NO REINFORCEMENT (SEE SECTIONS SHEET 7)

A. FTL-4278; 3/16" ANNEALED (60" HIGH MAX.)

B. FTL-4277; 3/16" OR 1/4" TEMPERED

D. FTL-4280; 5/8" TEMPERED I.G. (3/16"T, 1/4"SPACE, 3/16"T)

TABLE 1.

NOM. PANEL WIDTH	GLASS	OVER-ALL UNIT HEIGHT													
		36" (3^0)		42" (3^6)		48" (4^0)		54" (4^6)		60" (5^0)		72" (6^0)		80" (6^8)	
24" (2^0)	A	+65.0	-123.0	+65.0	-94.7	+65.0	-86.2	+65.0	-80.9	+65.0	-76.2				
	B	+65.0	-130.0	+65.0	-130.0	+65.0	-130.0	+65.0	-130.0	+65.0	-130.0	+65.0	-112.0	+65.0	-98.8
	D	+65.0	-130.0	+65.0	-130.0	+65.0	-130.0	+65.0	-130.0	+65.0	-130.0	+65.0	-121.3	+65.0	-107.1
30" (2^6)	A	+65.0	-93.5	+65.0	-84.1	+65.0	-73.6	+62.5	-62.5	+55.6	-55.6				
	B	+65.0	-130.0	+65.0	-130.0	+65.0	-130.0	+65.0	-130.0	+65.0	-119.5	+65.0	-94.3	+65.0	-82.7
	D	+65.0	-130.0	+65.0	-130.0	+65.0	-130.0	+65.0	-130.0	+65.0	-129.4	+65.0	-102.2	+65.0	-89.6
36" (3^0)	A	+65.0	-86.8	+65.0	-77.4	+65.0	-67.4	+58.7	-58.7	+51.1	-51.1				
	B	+65.0	-106.7	+65.0	-106.7	+65.0	-106.7	+65.0	-106.7	+65.0	-106.7	+65.0	-83.0	+65.0	-72.3
	D	+65.0	-115.6	+65.0	-115.6	+65.0	-115.6	+65.0	-115.6	+65.0	-115.6	+65.0	-89.9	+65.0	-78.3
42" (3^6)	A	+65.0	-77.0	+65.0	-70.3	+61.5	-61.5	+55.4	-55.4	+49.4	-49.4				
	B	+65.0	-80.0	+65.0	-78.4	+65.0	-78.4	+65.0	-78.4	+65.0	-78.4	+65.0	-75.3	+65.0	-65.1
	D	+65.0	-86.7	+65.0	-84.9	+65.0	-84.9	+65.0	-84.9	+65.0	-84.9	+65.0	-81.6	+65.0	-70.5
48" (4^0)	A	+65.0	-67.0	+61.7	-61.7	+56.7	-56.7	+50.8	-50.8	+46.7	-46.7				
	B	+64.0	-64.0	+61.0	-61.0	+60.0	-60.0	+60.0	-60.0	+60.0	-60.0	+60.0	-60.0	+60.0	-60.0
	D	+65.0	-69.3	+65.0	-66.0	+65.0	-65.0	+65.0	-65.0	+65.0	-65.0	+65.0	-65.0	+65.0	-65.0

INTERIOR

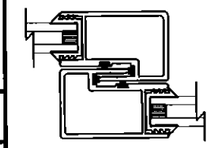

EXTERIOR

SINGLE/SINGLE INTERLOCK NO REINFORCEMENT

SEE NOTES 1 & 2	
SILL HEIGHT (IN.)	POS. DESIGN PRESS. (PSF)
2 1/2"	+65.0
1 3/4"	+35.3
INTERIOR SILL	NOT RATED

NOTES:

1. POSITIVE DESIGN PRESSURES SHOWN IN TABLES ARE BASED ON THE 2 1/2" HIGH SILL. POSITIVE DESIGN PRESSURE IS LIMITED TO 35.3 PSF WITH THE 1 3/4" SILL. NEGATIVE PRESSURES ARE UNCHANGED.
2. INTERIOR SILL IS USED WHERE WATER RESISTANCE IS NOT REQUIRED, IN WHICH CASE POSITIVE DESIGN PRESSURE EQUALS THE NEGATIVE DESIGN PRESSURE SHOWN IN THIS TABLE FOR THE RESPECTIVE SIZE.
3. OPERABLE WINDOWS MUST MEET MINIMUM EGRESS/EXCAPE REQUIREMENTS PER THE FBC.

PRODUCT REVISED
as complying with the Florida Building Code
Acceptance No 15-0609.09
Expiration Date May 22, 2018
By Manuel Perez
Miami Dade Product Control

ANTHONY LYNN MILLER
LICENSE
No. 58705
STATE OF FLORIDA
PROFESSIONAL ENGINEER
5/29/15

A. LYNN MILLER, P.E.
P.E.# 58705

Revsd By:	Date:	Revisions:	
F.K.	10/22/07	J	ADD SILL HT. VS +DP TABLE REMOVE TEST REPORTS REFERENCES TO FTL-3117 & FTL-4285
J.J.	10/14/11	K	NO CHANGE THIS SHEET
L.M.	5/28/15	L	NO CHANGE THIS SHEET
Drawn By: F.K.	Date: 09/08/04	Checked By: J.J.	Date: 04/02/06

1070 TECHNOLOGY DRIVE
NOKOMIS, FL 34275

P.O. BOX 1529
NOKOMIS, FL 34274

PGT
Visibly Better

Description: DESIGN PRESSURES, NO REINFORCEMENT

Title: ALUM. SLIDING GLASS WINDOW, NON-IMPACT

Series/Model:	Scale:	Sheet:	Drawing No.	Rev:
SGD2500	NTS	2 of 18	757-1	L

COMPARATIVE ANALYSIS:

TABLE 2.

>EXTENDED SILL, 2 1/2" HIGH
>SINGLE/SINGLE INTERLOCK
>FULL REINFORCEMENT (SEE SECTIONS SHEET 8)

GLASS TYPE:
B. FTL-3116; 3/16" OR 1/4" TEMPERED
D. FTL-4341; 5/8" TEMPERED I.G. (3/16"T,1/4"SPACE,3/16"T)

NOM. PANEL WIDTH	GLASS	OVER-ALL UNIT HEIGHT													
		36" (3^0)		42" (3^6)		48" (4^0)		54" (4^6)		60" (5^0)		72" (6^0)		80" (6^8)	
24" (2^0)	B	+65.0	-130.0	+65.0	-130.0	+65.0	-130.0	+65.0	-130.0	+65.0	-130.0	+65.0	-120.0	+65.0	-105.9
	D	+65.0	-130.0	+65.0	-130.0	+65.0	-130.0	+65.0	-130.0	+65.0	-130.0	+65.0	-120.0	+65.0	-105.9
30" (2^6)	B	+65.0	-128.0	+65.0	-128.0	+65.0	-128.0	+65.0	-128.0	+65.0	-128.0	+65.0	-101.1	+65.0	-88.6
	D	+65.0	-128.0	+65.0	-128.0	+65.0	-128.0	+65.0	-128.0	+65.0	-128.0	+65.0	-101.1	+65.0	-88.6
36" (3^0)	B	+65.0	-88.9	+65.0	-88.9	+65.0	-88.9	+65.0	-88.9	+65.0	-88.9	+65.0	-88.9	+65.0	-77.4
	D	+65.0	-88.9	+65.0	-88.9	+65.0	-88.9	+65.0	-88.9	+65.0	-88.9	+65.0	-88.9	+65.0	-77.4
42" (3^6)	B	+65.0	-66.7	+65.0	-65.3	+65.0	-65.3	+65.0	-65.3	+65.0	-65.3	+65.0	-65.3	+65.0	-65.3
	D	+65.0	-66.7	+65.0	-65.3	+65.0	-65.3	+65.0	-65.3	+65.0	-65.3	+65.0	-65.3	+65.0	-65.3
48" (4^0)	B	+53.3	-53.3	+50.8	-50.8	+50.0	-50.0	+50.0	-50.0	+50.0	-50.0	+50.0	-50.0	+50.0	-50.0
	D	+53.3	-53.3	+50.8	-50.8	+50.0	-50.0	+50.0	-50.0	+50.0	-50.0	+50.0	-50.0	+50.0	-50.0

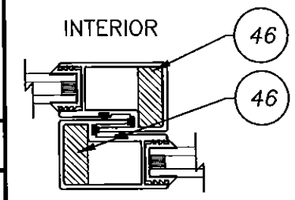

SINGLE/SINGLE INTERLOCK REINFORCED

SEE NOTES 1 & 2	
SILL HEIGHT (IN.)	POS. DESIGN PRESS. (PSF)
2 1/2"	+65.0
1 3/4"	+35.3
INTERIOR SILL	NOT RATED

COMPARATIVE ANALYSIS:

TABLE 3.

>EXTENDED SILL, 2 1/2" HIGH
>SINGLE/DOUBLE INTERLOCK (OUTSIDE)
>FULL REINFORCEMENT (SEE SECTIONS SHEET 9)

GLASS TYPE:
C. FTL-3102; 1/4" TEMPERED
D. FTL-4273 & FTL-4275; 5/8" TEMPERED I.G. (3/16"T, 1/4"SPACE, 3/16"T)

NOM. PANEL WIDTH	GLASS	OVER-ALL UNIT HEIGHT													
		36" (3^0)		42" (3^6)		48" (4^0)		54" (4^6)		60" (5^0)		72" (6^0)		80" (6^8)	
24" (2^0)	C	+65.0	-130.0	+65.0	-130.0	+65.0	-130.0	+65.0	-130.0	+65.0	-130.0	+65.0	-130.0	+65.0	-127.1
	D	+65.0	-130.0	+65.0	-130.0	+65.0	-130.0	+65.0	-130.0	+65.0	-130.0	+65.0	-130.0	+65.0	-130.0
30" (2^6)	C	+65.0	-130.0	+65.0	-130.0	+65.0	-130.0	+65.0	-130.0	+65.0	-130.0	+65.0	-121.3	+65.0	-106.3
	D	+65.0	-130.0	+65.0	-130.0	+65.0	-130.0	+65.0	-130.0	+65.0	-130.0	+65.0	-130.0	+65.0	-115.2
36" (3^0)	C	+65.0	-106.7	+65.0	-106.7	+65.0	-106.7	+65.0	-106.7	+65.0	-106.7	+65.0	-106.7	+65.0	-92.9
	D	+65.0	-115.6	+65.0	-115.6	+65.0	-115.6	+65.0	-115.6	+65.0	-115.6	+65.0	-115.6	+65.0	-100.6
42" (3^6)	C	+65.0	-80.0	+65.0	-78.4	+65.0	-78.4	+65.0	-78.4	+65.0	-78.4	+65.0	-78.4	+65.0	-78.4
	D	+65.0	-86.7	+65.0	-84.9	+65.0	-84.9	+65.0	-84.9	+65.0	-84.9	+65.0	-84.9	+65.0	-84.9
48" (4^0)	C	+64.0	-64.0	+61.0	-61.0	+60.0	-60.0	+60.0	-60.0	+60.0	-60.0	+60.0	-60.0	+60.0	-60.0
	D	+65.0	-69.3	+65.0	-66.0	+65.0	-65.0	+65.0	-65.0	+65.0	-65.0	+65.0	-65.0	+65.0	-65.0

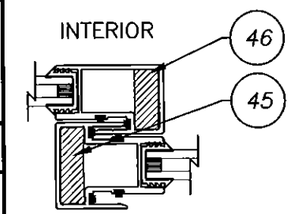

SINGLE/DOUBLE INTERLOCK REINFORCED

NOTES:
1. POSITIVE DESIGN PRESSURES SHOWN IN TABLES ARE BASED ON THE 2 1/2" HIGH SILL. POSITIVE DESIGN PRESSURE IS LIMITED TO 35.3 PSF WITH THE 1 3/4" SILL. NEGATIVE PRESSURES ARE UNCHANGED.
2. INTERIOR SILL IS USED WHERE WATER RESISTANCE IS NOT REQUIRED, IN WHICH CASE POSITIVE DESIGN PRESSURE EQUALS THE NEGATIVE DESIGN PRESSURE SHOWN IN THIS TABLE FOR THE RESPECTIVE SIZE.
3. OPERABLE WINDOWS MUST MEET THE MINUMUM EGRESS/ESCAPE REQUIREMENTS PER THE FBC.

PRODUCT REVISED
as complying with the Florida Building Code
Acceptance No 15-0609.09
Expiration Date May 22, 2018
By Manuel Perez
Miami-Dade Product Control

ANTHONY LYNN MILLER
LICENSE
No. 58705
STATE OF FLORIDA
PROFESSIONAL ENGINEER
5/29/15

A. LYNN MILLER, P.E.
P.E.# 58705

Revised By:	Date:	Revisions:	
F.K.	10/22/07	J	ADD SILL HT. VS +DP TABLE
J.J.	10/14/11	K	NO CHANGE THIS SHEET
L.M.	5/28/15	L	NO CHANGE THIS SHEET
Drawn By: F.K.	Date: 09/08/04	Checked By: J.J.	Date: 04/02/06

1070 TECHNOLOGY DRIVE
NOKOMIS, FL 34275
P.O. BOX 1529
NOKOMIS, FL 34274

PGT Visibly Better

Description: DESIGN PRESSURES, REINFORCED
Title: ALUM. SLIDING GLASS WINDOW, NON-IMPACT

Series/Model:	Scale:	Sheet:	Drawing No.	Rev:
SGD2500	NTS	3 of 18	757-1	L

CODE	PANEL TYPES		
A	R.H. INTERLOCK		LOCKSTILE
B	R.H. INTERLOCK		R.H. INTERLOCK
C	R.H. INTERLOCK		REVERSE ASTRAGAL
D	LOCKSTILE		INTERLOCK R.H.
E	L.H. INTERLOCK		R.H. INTERLOCK
F	L.H. INTERLOCK		L.H. INTERLOCK
G	LOCKSTILE		DOUBLE INTERLOCK
H	R.H. INTERLOCK		L.H. INTERLOCK
I	DOUBLE INTERLOCK		DOUBLE INTERLOCK
J	LOCKSTILE		STANDARD ASTRAGAL
K	L.H. INTERLOCK		LOCKSTILE
L	L.H. INTERLOCK		STANDARD ASTRAGAL
M	LOCKSTILE		L.H. INTERLOCK
N	STANDARD ASTRAGAL		L.H. INTERLOCK
P	R.H. INTERLOCK		FIXED LOCKSTILE

CODE	PANEL TYPES		
R	FIXED LOCKSTILE		L.H. INTERLOCK
S	FIXED LOCKSTILE		STANDARD ASTRAGAL
T	REVERSE ASTRAGAL		FIXED LOCKSTILE
U	REVERSE ASTRAGAL		LOCKSTILE
V	FIXED LOCKSTILE		FIXED LOCKSTILE
W	DOUBLE INTERLOCK		STANDARD ASTRAGAL
Y	FIXED LOCKSTILE		DOUBLE INTERLOCK
Z	LOCKSTILE		LOCKSTILE
YR	DOUBLE INTERLOCK		FIXED LOCKSTILE
GR	DOUBLE INTERLOCK		LOCKSTILE
LR	REVERSE ASTRAGAL		R.H. INTERLOCK
WR	STANDARD ASTRAGAL		DOUBLE INTERLOCK
DS	DOUBLE INTERLOCK		R.H. INTERLOCK
SD	L.H. INTERLOCK		DOUBLE INTERLOCK

CONFIGURATION NOTES:

1. MAXIMUM DAYLIGHT OPENING OF THE ADJACENT 48" NOMINAL WIDTH PANEL TYPES IS 44 1/8".
2. MAX. DLO HEIGHT = 75 3/4"
3. CONFIGURATIONS INCLUDE BY-PASS, POCKET AND ANY COMINATION THEREOF (LIMITED TO EIGHT PANELS AND SEVEN TRACK FRAMES) FRAMES OVER 3-TRACKS ARE MADE UP OF THE APPROVED FRAME COMPONENTS SHOWN ON SHEETS 13 AND 14 OF THIS NOA.

EXAMPLE MAXIMUM CONFIGURATIONS:
A. EIGHT PANELS ON FOUR TRACKS (CENTER MEET)
B. FIVE PANELS ON FIVE TRACKS (BY-PASS)

SEE LIST BELOW

1	X
2	XX
3	OX
4	XO
5	OO
6	XXX
7	XOO
8	OOX
9	XXO
10	OXX
11	OXO
12	XOX
13	OOO
14	XXXX
15	OXXO
16	OXXX
17	XXXO
18	OOXX
19	XXOO
20	OOOX
21	XOOO
22	OOOO
23	XXXXX
24	OXXXX
25	OX-XXO
26	OXX-XO
27	XXXXO
28	OOOOO
29	XXX-XXX
30	OXX-XXO
31	XXXX-XXXX
32	OXXX-XXXO

PRODUCT REVISED
as complying with the Florida
Building Code
Acceptance No 15-0609.09
Expiration Date May 22, 2018
By Manuel Perez
Miami Dade Product Control

ANTHONY LYNN MILLER
LICENSE
No. 58705
5/29/15
STATE OF FLORIDA
PROFESSIONAL ENGINEER
A. LYNN MILLER, P.E.
P.E.# 58705

Revsd By:	Date:	Revisions:	
F.K.	10/22/07	J	REMOVE EXCESS FROM NOTE 3 AND ADD CONFIGURATION LIST
J.J.	10/14/11	K	NO CHANGE THIS SHEET
L.M.	5/28/15	L	NO CHANGE THIS SHEET
Drawn By: F.K.	Date: 09/08/04	Checked By: J.J.	Date: 04/02/06

1070 TECHNOLOGY DRIVE
NOKOMIS, FL 34275

P.O. BOX 1529
NOKOMIS, FL 34274

PGT
Visibly Better

Description: PANEL TYPES

Title: ALUM. SLIDING GLASS WINDOW, NON-IMPACT

Series/Model:	Scale:	Sheet:	Drawing No.	Rev:
SGD2500	NTS	4 of 18	757-1	L

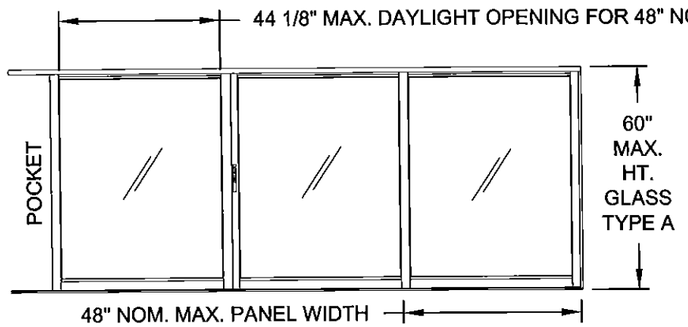

pXXO or OXXp

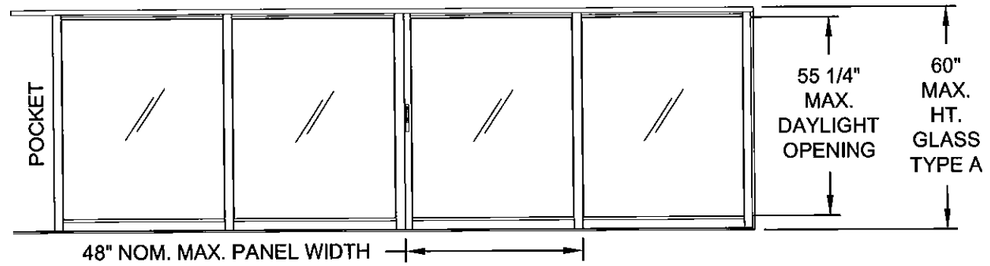

pXXXO or OXXXp

NOTES:
1. SEE SHEET 4 FOR PANEL TYPES.
2. DLO WIDTH = NOMINAL WIDTH - 3 7/8"
3. DLO HEIGHT = WINDOW HEIGHT - 4 1/4"

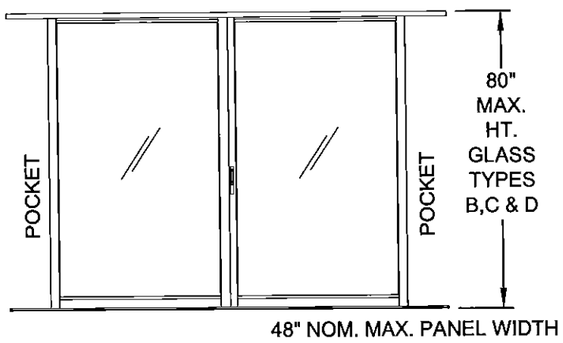

pXXp

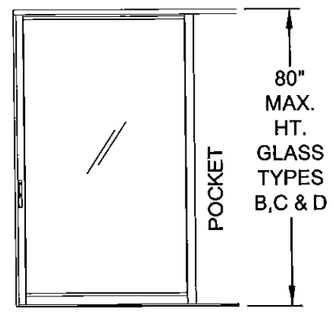

Xp or pX

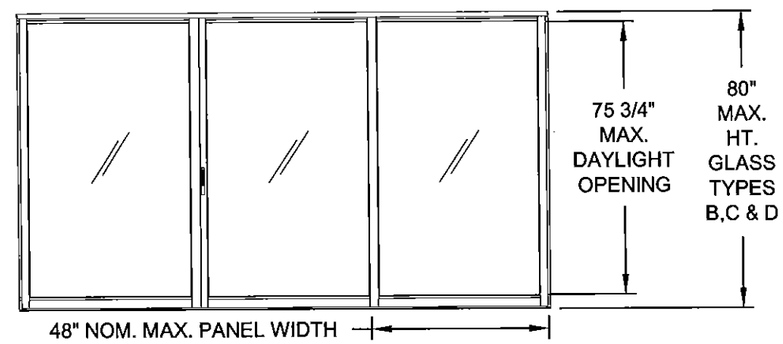

OXO

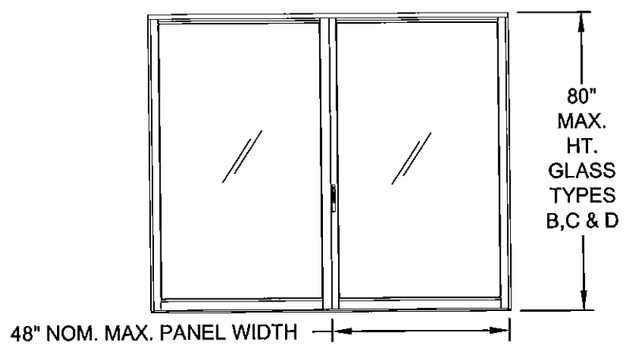

OX or XO

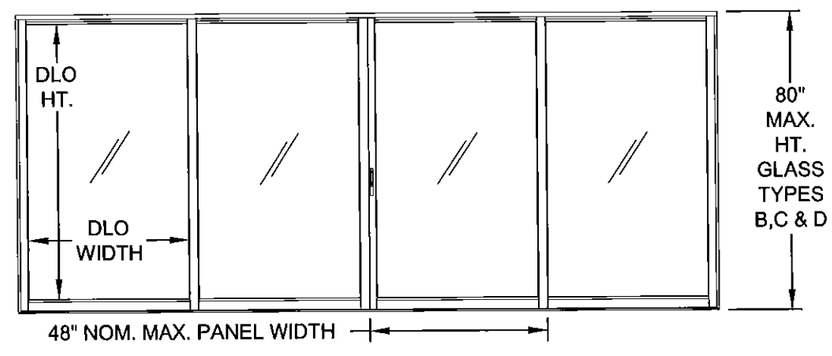

OXXO or XXXX

PRODUCT REVISED
as complying with the Florida
Building Code
Acceptance No 15-0609.09
Expiration Date May 22, 2018
By Manuel Perez
Miami Dade Product Control

ANTHONY LYNN MILLER
LICENSE
No. 58705
5/29/15
STATE OF FLORIDA
PROFESSIONAL ENGINEER
A. LYNN MILLER, P.E.
P.E.# 58705

Revised By:	Date:	Revisions:	
F.K.	10/22/07	J	NO CHANGES THIS SHEET
J.J.	10/14/11	K	NO CHANGE THIS SHEET
L.M.	5/28/15	L	NO CHANGE THIS SHEET
Drawn By: F.K.	Date: 09/08/04	Checked By: J.J.	Date: 04/02/06

1070 TECHNOLOGY DRIVE
NOKOMIS, FL 34275

P.O. BOX 1529
NOKOMIS, FL 34274

PGT
Visibly Better

Description: EXAMPLE ELEVATIONS

Title: ALUM. SLIDING GLASS WINDOW, NON-IMPACT

Series/Model:	Scale:	Sheet:	Drawing No.	Rev:
SGD2500	NTS	5 of 18	757-1	L

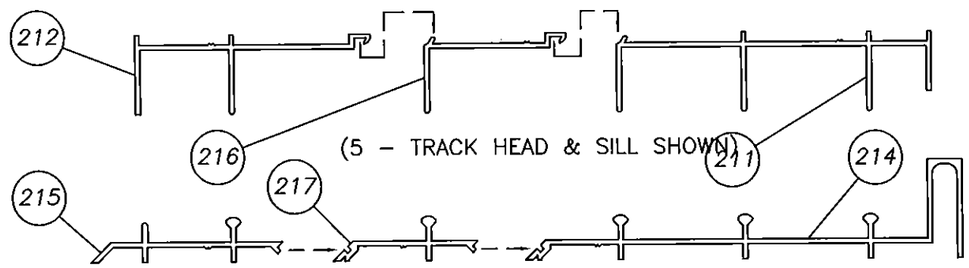

EXAMPLE MULTI–PART EXTERIOR FRAME

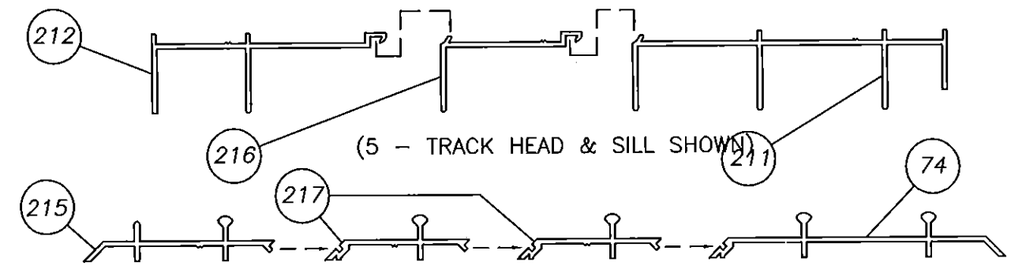

EXAMPLE MULTI–PART INTERIOR FRAME

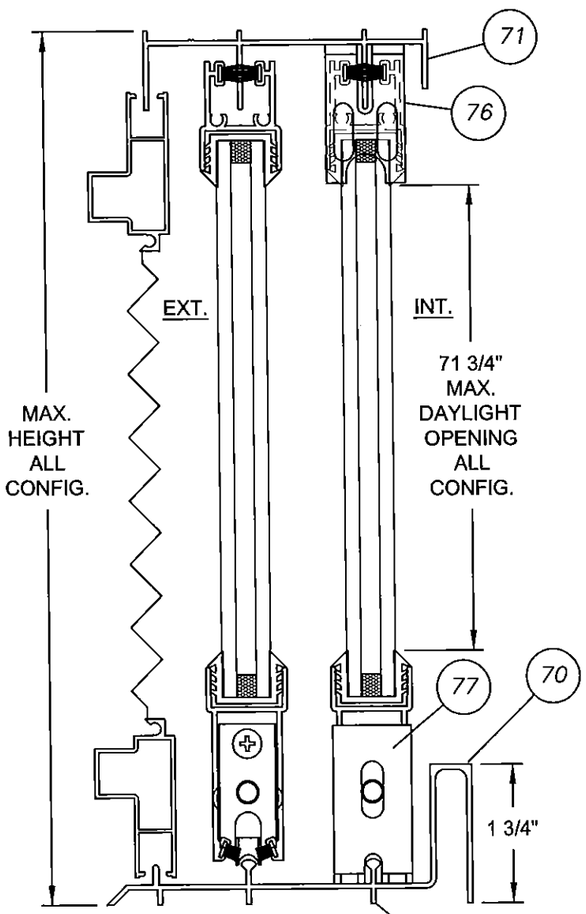

NOTE:
MAX. DP W/ 1 3/4"
SILL = +35.3 PSF

VERTICAL SECT.
STANDARD SILL

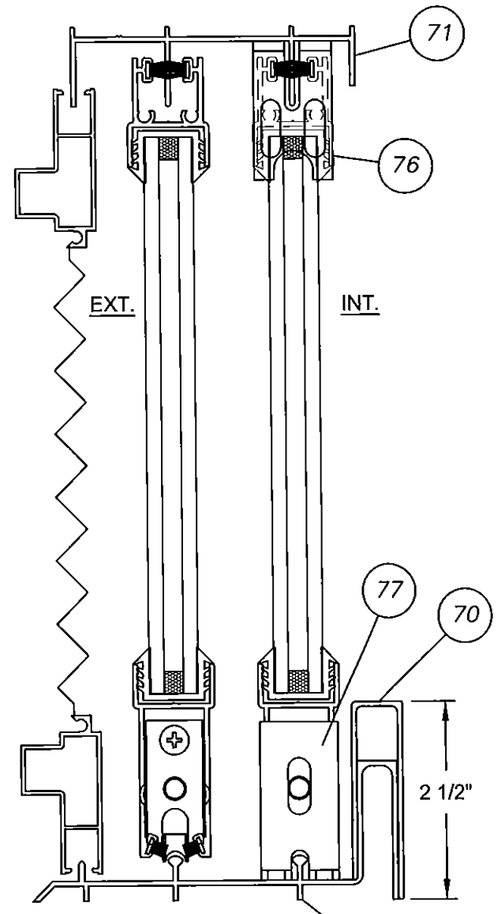

VERTICAL SECT.
EXTENDED SILL

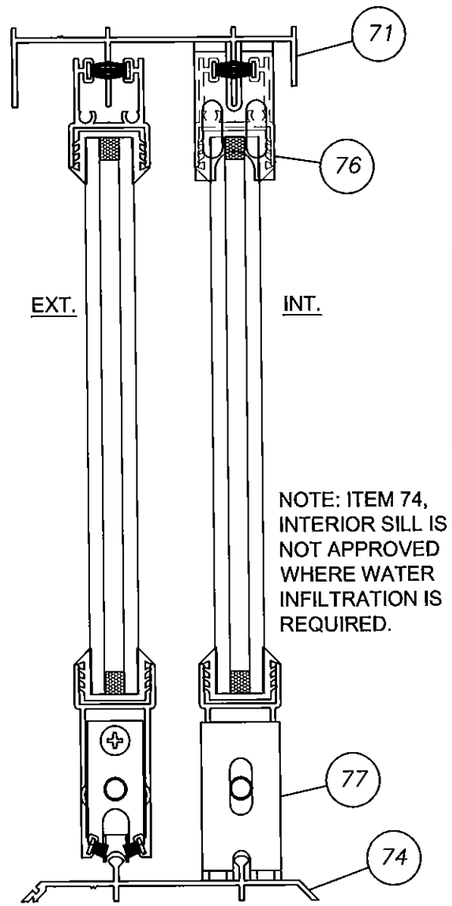

NOTE: ITEM 74, INTERIOR SILL IS NOT APPROVED WHERE WATER INFILTRATION IS REQUIRED.

VERTICAL SECT.
INTERIOR SILL

PRODUCT REVISED
as complying with the Florida
Building Code
Acceptance No 15-0609.09
Expiration Date May 22, 2018
By Manuel Perez
Miami Dade Product Control

ANTHONY LYNN MILLER
LICENSE
No. 58705
5/28/15
STATE OF
FLORIDA
PROFESSIONAL ENGINEER

A. LYNN MILLER, P.E.
P.E.# 58705

Revsd By:	Date:	Revisions:	
F.K.	10/22/07	J	NO CHANGES THIS SHEET
J.J.	10/14/11	K	NO CHANGE THIS SHEET
L.M.	5/28/15	L	NO CHANGE THIS SHEET
Drawn By: F.K.	Date: 09/08/04	Checked By: J.J.	Date: 04/02/06

1070 TECHNOLOGY DRIVE
NOKOMIS, FL 34275

P.O. BOX 1529
NOKOMIS, FL 34274

PGT
Visibly Better

Description: VERTICAL SECTIONS

Title: ALUM. SLIDING GLASS WINDOW, NON-IMPACT

Series/Model:	Scale:	Sheet:	Drawing No.	Rev:
SGD2500	1/2	6 of 18	757-1	L

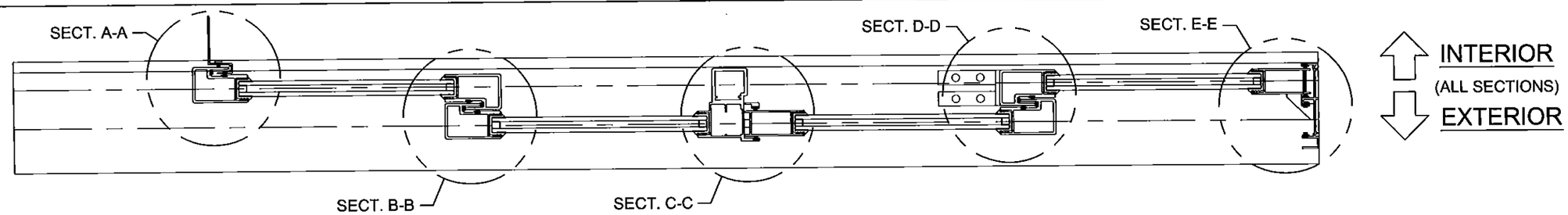

SINGLE/SINGLE INTERLOCK EXAMPLE W/ NO REINFORCEMENT (TABLE 1, SHT. 2 DESIGN PRESSURES)

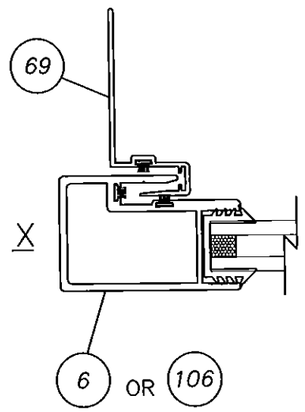

SECT. A–A
MOVABLE INTERLOCK
AT P–HOOK

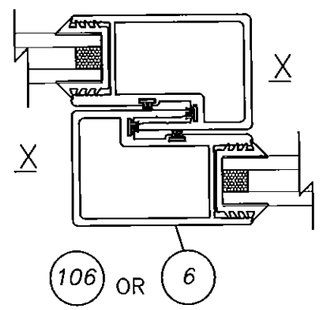

SECT. B–B
MOVABLE SINGLE/SINGLE INTERLOCK

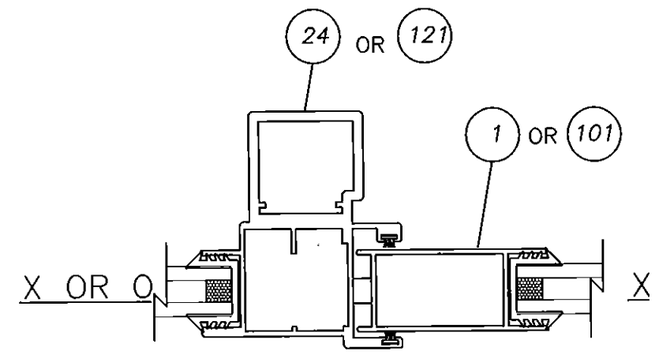

SECT. C–C
LOCKSTILE AT ASTRAGAL

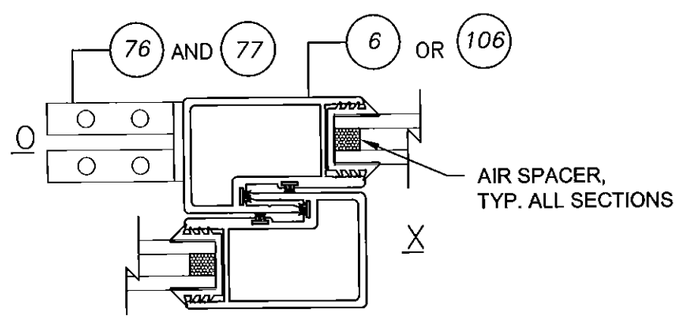

SECT. D–D
FIXED TO MOVABLE SINGLE/SINGLE INTERLOCK

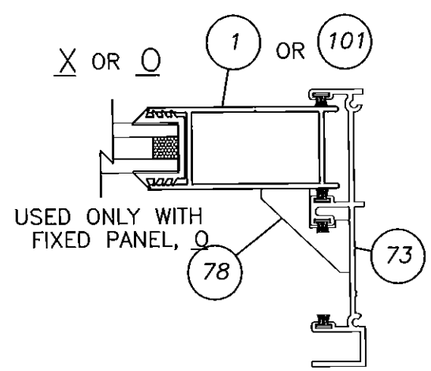

SECT. E–E
LOCKSTILE AT JAMB

PRODUCT REVISED
as complying with the Florida
Building Code
Acceptance No 15-0609.09
Expiration Date May 22, 2018
By Manuel Perez
Miami Dade Product Control

ANTHONY LYNN MILLER
LICENSE
No. 58705
5/28/15
STATE OF
FLORIDA
PROFESSIONAL ENGINEER
A. LYNN MILLER, P.E.
P.E.# 58705

Revsd By:	Date:	Revisions:	
F.K.	10/22/07	J	NO CHANGES THIS SHEET
J.J.	10/14/11	K	NO CHANGE THIS SHEET
L.M.	5/28/15	L	NO CHANGE THIS SHEET
Drawn By: F.K.	Date: 09/08/04	Checked By: J.J.	Date: 04/02/06

1070 TECHNOLOGY DRIVE
NOKOMIS, FL 34275

P.O. BOX 1529
NOKOMIS, FL 34274

PGT
Visibly Better

Description: HORIZONTAL SECTIONS, TABLE 1 - DPS

Title: ALUM. SLIDING GLASS WINDOW NON-IMPACT

Series/Model:	Scale:	Sheet:	Drawing No.	Rev:
SGD2500	1/2	7 of 18	757-1	L

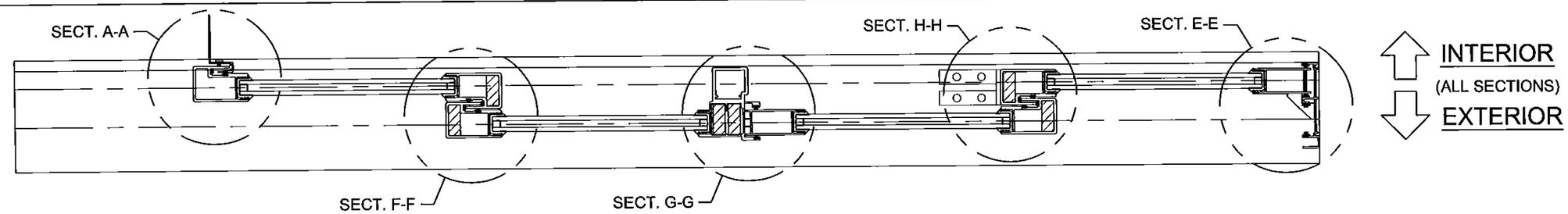

SINGLE/SINGLE INTERLOCK EXAMPLE FULL REINFORCEMENT (TABLE 2, SHT. 3 DESIGN PRESSURES)

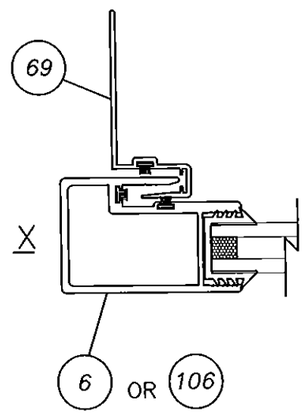

SECT. A–A
MOVABLE INTERLOCK
AT P–HOOK

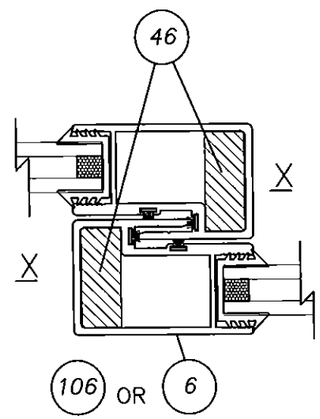

SECT. F–F
MOVABLE SINGLE/SINGLE INTERLOCK

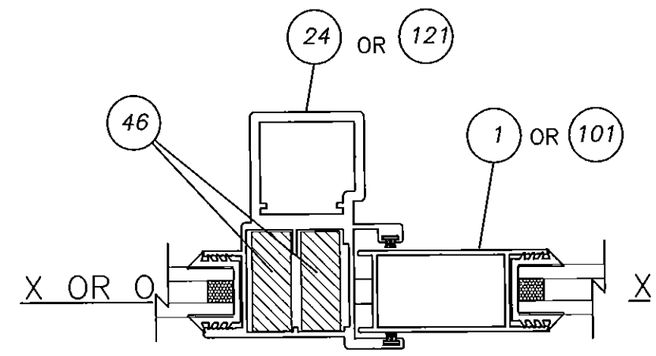

SECT. G–G
LOCKSTILE AT ASTRAGAL

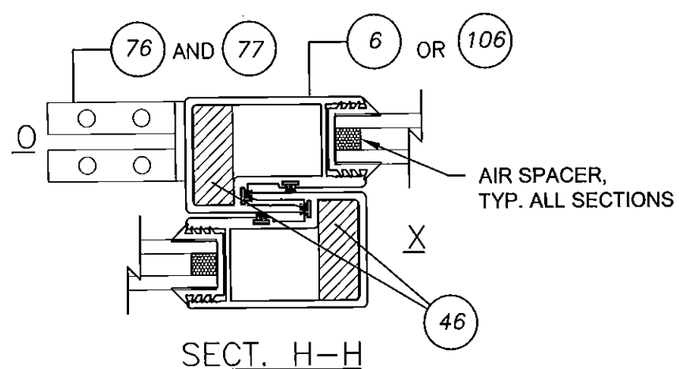

SECT. H–H
FIXED TO MOVABLE SINGLE/SINGLE INTERLOCK

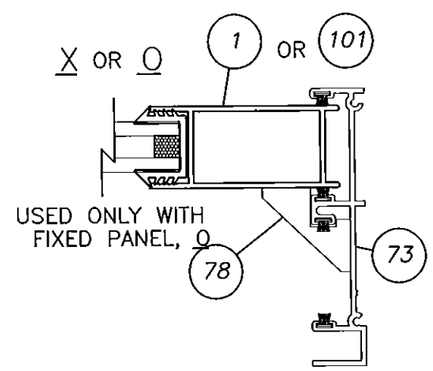

SECT. E–E
LOCKSTILE AT JAMB

PRODUCT REVISED
as complying with the Florida
Building Code
Acceptance No. 15-0609.09
Expiration Date May 22, 2018
By Manuel Perez
Miami Dade Product Control

ANTHONY LYNN MILLER
LICENSE
No. 58705
5/29/15
STATE OF
FLORIDA
PROFESSIONAL ENGINEER

A. LYNN MILLER, P.E.
P.E.# 58705

Revsd By:	Date:	Revisions:	
F.K.	10/22/07	J	NO CHANGES THIS SHEET
J.J.	10/14/11	K	NO CHANGE THIS SHEET
L.M.	5/28/15	L	NO CHANGE THIS SHEET
Drawn By: F.K.	Date: 09/08/04	Checked By: J.J.	Date: 04/02/06

1070 TECHNOLOGY DRIVE
NOKOMIS, FL 34275

P.O. BOX 1529
NOKOMIS, FL 34274

PGT
Visibly Better

Description: HORIZONTAL SECTIONS, TABLE 2 - DPS

Title: ALUM. SLIDING GLASS WINDOW NON-IMPACT

Series/Model:	Scale:	Sheet:	Drawing No.	Rev:
SGD2500	1/2	8 of 18	757-1	L

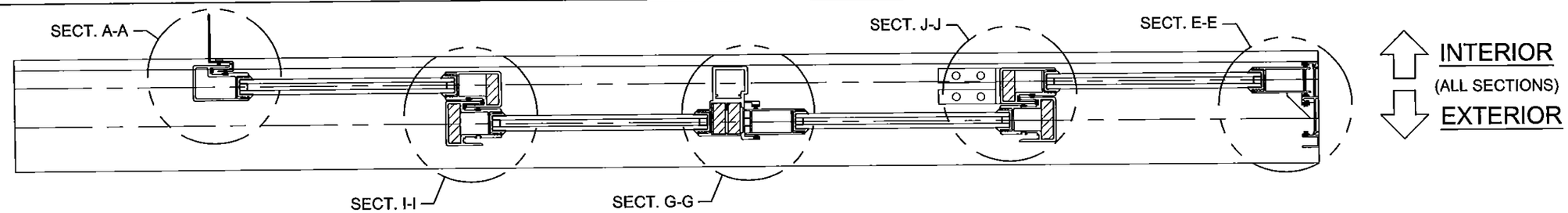

SINGLE/DOUBLE INTERLOCK EXAMPLE FULL REINFORCEMENT (TABLE 3, SHT. 3 DESIGN PRESSURES)

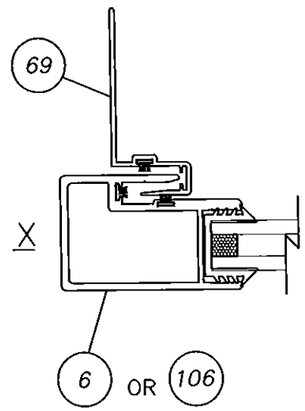

SECT. A–A
MOVABLE INTERLOCK
AT P–HOOK

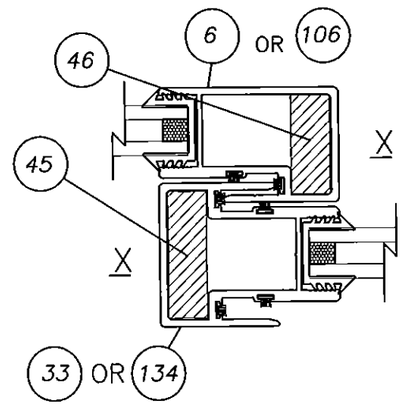

SECT. I–I
MOVABLE SINGLE/DOUBLE INTERLOCK

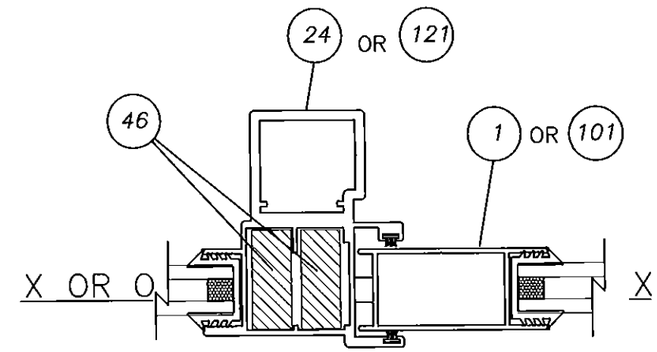

SECT. G–G
LOCKSTILE AT ASTRAGAL

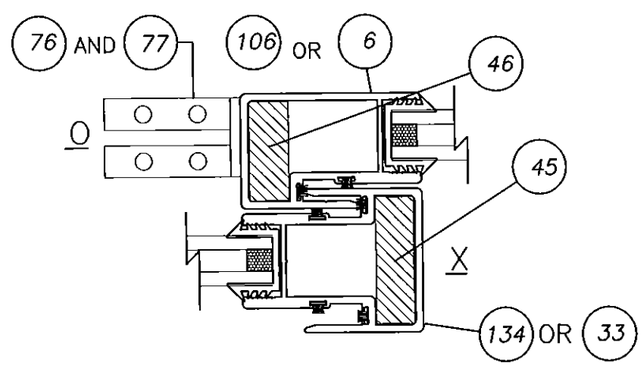

SECT. J–J
FIXED TO MOVABLE SINGLE/SINGLE INTERLOCK

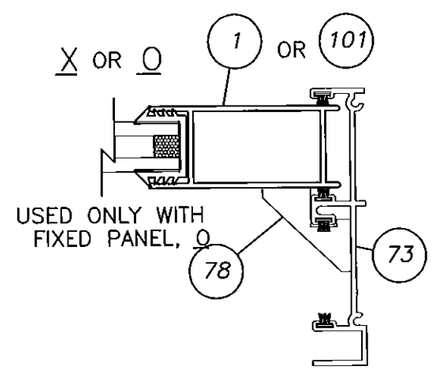

SECT. E–E
LOCKSTILE AT JAMB

PRODUCT REVISED
as complying with the Florida
Building Code
Acceptance No 15-0609.09
Expiration Date May 22, 2018
By Manuel Perez
Miami Dade Product Control

ANTHONY LYNN MILLER
LICENSE
No. 58705
5/29/15
STATE OF
FLORIDA
PROFESSIONAL ENGINEER

A. LYNN MILLER, P.E.
P.E.# 58705

Revsd By:	Date:	Revisions:	
F.K.	10/22/07	J	NO CHANGES THIS SHEET
J.J.	10/14/11	K	NO CHANGE THIS SHEET
L.M.	5/28/15	L	NO CHANGE THIS SHEET
Drawn By: F.K.	Date: 09/08/04	Checked By: J.J.	Date: 04/02/06

1070 TECHNOLOGY DRIVE
NOKOMIS, FL 34275

P.O. BOX 1529
NOKOMIS, FL 34274

PGT
Visibly Better

Description: HORIZONTAL SECTIONS, TABLE 3 - DPS

Title: ALUM. SLIDING GLASS WINDOW NON-IMPACT

Series/Model:	Scale:	Sheet:	Drawing No.	Rev:
SGD2500	1/2	9 of 18	757-1	L

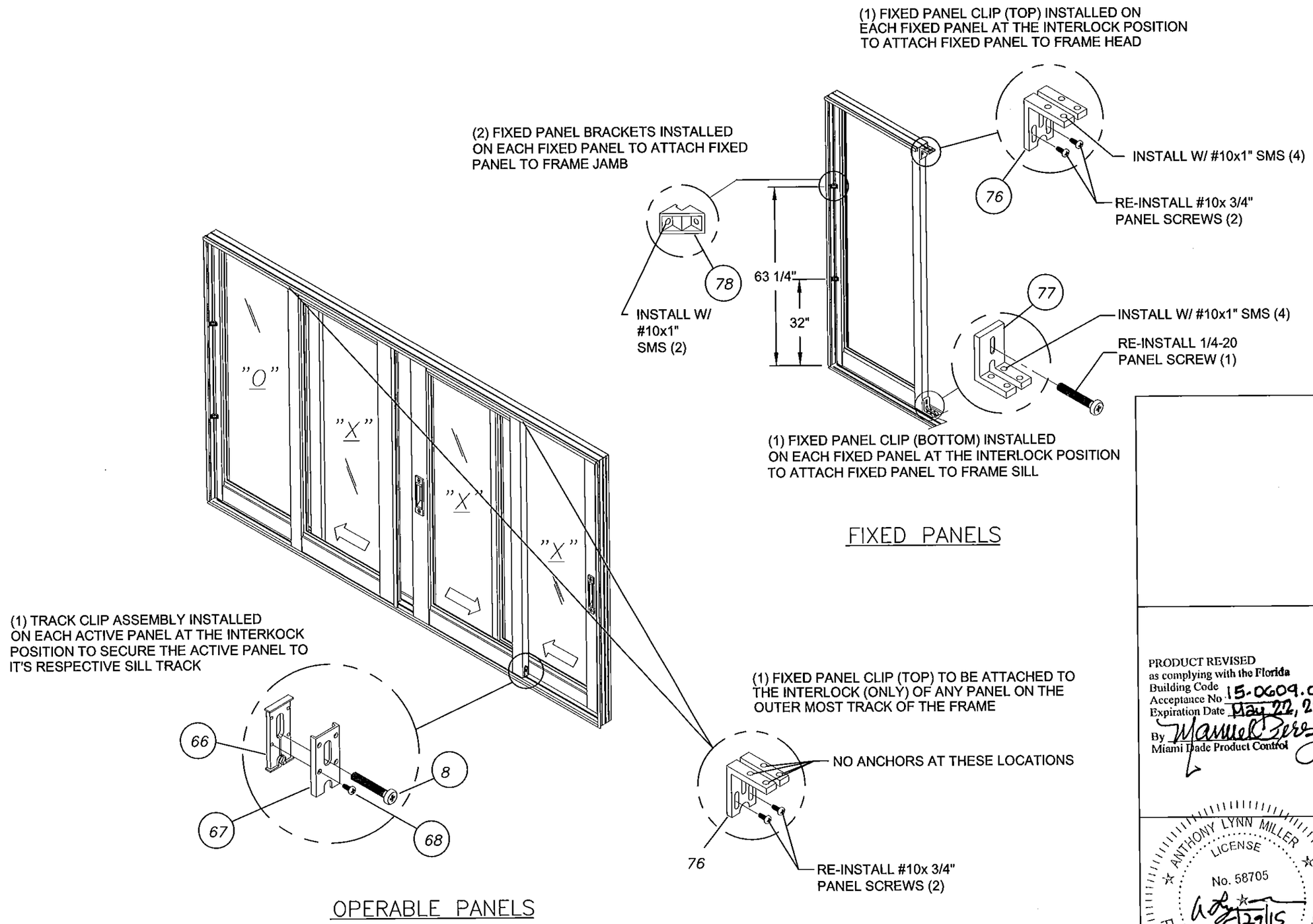

PRODUCT REVISED
as complying with the Florida
Building Code
Acceptance No 15-0609.09
Expiration Date May 22, 2018
By Manuel Perez
Miami Dade Product Control

ANTHONY LYNN MILLER
LICENSE
No. 58705
5/29/15
STATE OF FLORIDA
PROFESSIONAL ENGINEER

A. LYNN MILLER, P.E.
P.E.# 58705

Revsd By:	Date:	Revisions:	
F.K.	10/22/07	J	NO CHANGES THIS SHEET
J.J.	10/14/11	K	ADDED FIXED CLIP TO INTERLOCK TO PREVENT SASH FALLING OUT
L.M.	5/28/15	L	NO CHANGE THIS SHEET
Drawn By: F.K.	Date: 09/08/04	Checked By: J.J.	Date: 04/02/06

1070 TECHNOLOGY DRIVE
NOKOMIS, FL 34275

P.O. BOX 1529
NOKOMIS, FL 34274

PGT
Visibly Better

Description: TRACK CLIP & FIXED CLIPS INSTALLATION

Title: ALUM. SLIDING GLASS WINDOW, NON-IMPACT

Series/Model:	Scale:	Sheet:	Drawing No.	Rev:
SGD2500	1/2	10 of 18	757-1	L

ITEM	PART #	DESCRIPTION	PGT#
1	708	LOCKSTILE, MONOLITHIC	69362
2		LATCH ASSEMBLY (LOCK)	7LOCK
3		LATCH ASSEMBLY (DUMMY)	7DUMY
4		#10-32 X 1.25 PH. FL. MS (LATCH)	71114K
6	705	INTERLOCK (STD.), MONOLITHIC	69409
7	1119	#10 X .750 PH. PN. SMS - S.S.	7S134X
8		1/4-20 X 1.125 PH. PN. MS	71420X118PPMSX
9	1209	WSTP, .187 X 320 - PILE	6FELTK
11	706	TOP RAIL, MONOLITHIC	68172
12	1281	WSTP, .187 X .290 FIN SEAL	61281W
13	725B	TOP PANEL GUIDE	41801
15	707C	BOTTOM RAIL, MONOLITHIC	68173
17	726	BOTTOM PANEL GUIDE	41802
18	661	SINGLE ROLLER ASSY.	7SRAZ
19	661	SINGLE ROLLER ASSY. - S.S.	7SRAX
20	683	TANDEM ROLLER ASSY.	7683Z
21	683	TANDEM ROLLER ASSY. - S.S.	7683SS
23	609	ASTRAGAL, MONOLITHIC	68315
24	720	ASTRAGAL (H.D.), MONOLITHIC	69492
26	653	LATCH KEEPER	7SDKEEP
27	653	LATCH KEEPER - S.S.	7SDKEEPX
28		#8 X .312 PH. TR. SMS	78X56A
29	729	JAMB BUMPER	72087K
30		#6 X .375 PH. PN. SMS	76X38PPA
31	663/664	BUMPER SHIM (.030 OR .060)	41831
33	734	DOUBLE INTERLOCK (STD.), MONO.	69494
36	1007	GLAZING VINYL - 3/16	6T304
37		GLAZING VINYL - 1/4	614GLK
38		3/16" ANNEALED GLASS	
39		3/16" TEMPERED GLASS	
40		1/4" TEMPERED GLASS	
42	645	ADD-ON STILE (OXO ONLY)	69112
45	755	1/2 X 1 5/8 REINF. - ALUM	6755M
46	1214	1/2 X 1 1/4 REINF. - ALUM.	61214M
49	749	REINFORCEMENT SPRING CLIP	7BRKTM25
51	1040	MORTICE LOCK (DEAD LATCH)	71040
52	1040-2	MORTICE LOCK (DEAD LATCH) S.S.	71040X
53		CYLINDER/HOUSING ASSY. (MORTICE)	70288K
54	1016	#8 X .625 PH. FL. SMS	7858ZA
55	657	BACKING PLATE (MORTICE)	41830N
56	1045	MORTICE HANDLE SET	71045
57		COVER PLATE	7VT43
58	659	MORTICE LATCH KEEPER	7SDSP5X1
60	1239	3/16" APPLIED MUNTIN	68421
61	665	COLONIAL ENDPIECE	41628

ITEM	PART #	DESCRIPTION	PGT#
62	522	COLONIAL INTERSECTION	41630
63	124	APPLIED COLONIAL MUNTIN	66631
64	1240	1/16 X 1 FLATBAR	68926T52
66	754	TRACK CLIP GUIDE	41754B/W
67	756	TRACK CLIP COVER	6756B/W
68		#6 X 3/8 PP SMS (18-8 SS)	76X38PPAX
69	740	HOOKSTRIP (P-HOOK)	63713
70	722A	HIGH-RISE TRACK ADAPTER	69371
71	702	2-TRACK HEAD	68179
72	703B	2-TRACK EXTERIOR SILL	6703B
73	704	2-TRACK JAMB	68180
74	637	2-TRACK INTERIOR SILL	68275
76	717	FIXED PANEL CLIP, TOP	7LA13A
77	717B	FIXED PANEL CLIP, BOTTOM	7717FPCA
78	646	FIXED PANEL BRACKET	41814
90	1136	#6 X 1/2 PP SMS	76X12A
101	736	LOCKSTILE, I.G. GLASS	60392
106	735	INTERLOCK (STD.) I.G. GLASS	60393
111	618	TOP RAIL, I.G. GLASS	69088
115	619	BOTTOM RAIL, I.G. GLASS	69089
121	737	ASTRAGAL, I.G. GLASS	60394
130		5/8" I.G. GLASS; 3/16" TEMPERED 1/4" SPACE, 3/16" TEMPERED	
131	1006	GLAZING VINYL - INSULATED GLASS	658GLK
134	745	DOUBLE INTERLOCK (STD.), I.G. GLASS	60551
203	666	OPT. SCREEN RAIL, POCKET DOOR	61394
208	631	3 - TRACK HEAD	68182
209	632	3 - TRACK JAMB	68183
210	633	3 - TRACK SILL, EXT. W/ SCREEN RAIL	68184M
211	613	ADD-ON TRACK HEAD	68187
212	614	ADD-ON TRACK FOR FRAME HEAD	68185
213	617	2 - TRACK FRAME JAMB, ADD-ON	68188
214	615	3 - TRACK SILL, ADD-ON	68189M
215	616	ADD-ON TRACK W/ SCREEN FOR SILL	68190M
216	634	ADD-ON HEAD	68186
217	635	ADD-ON SILL	68191M
218	638	LOW-RISE 2 - TRACK SILL, EXTERIOR	68952M
220	636	1 - TRACK SILL, INTERIOR ADD-ON	68274M
222	671	LOW-RISE 1 - TRACK SILL, EXTERIOR	60803M
225	732	HIGH-RISE TRACK ADAPTER	68313M

PRODUCT REVISED
as complying with the Florida
Building Code
Acceptance No 15-0609.09
Expiration Date May 22, 2018
By Manuel Perez
Miami Dade Product Control

ANTHONY LYNN MILLER
LICENSE
No. 58705
5/27/15
STATE OF
FLORIDA
PROFESSIONAL ENGINEER
A. LYNN MILLER, P.E.
P.E.# 58705

Revsd By:	Date:	Revisions:	
F.K.	10/22/07	J	DELETE ITEMS 201, 202 AND 204, 1-TRACK FRAMES
J.J.	10/14/11	K	NO CHANGE THIS SHEET
L.M.	5/28/15	L	NO CHANGE THIS SHEET
Drawn By: F.K.	Date: 09/08/04	Checked By: J.J.	Date: 04/02/06

1070 TECHNOLOGY DRIVE
NOKOMIS, FL 34275

P.O. BOX 1529
NOKOMIS, FL 34274

PGT
Visibly Better

Description: PARTS LISTS

Title: ALUM. SLIDING GLASS WINDOW, NON-IMPACT

Series/Model:	Scale:	Sheet:	Drawing No.	Rev:
SGD2500	NTS	11 of 18	757-1	L

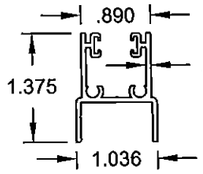

I.G. TOP RAIL
MAT'L: 6063–T5
#618
(111)

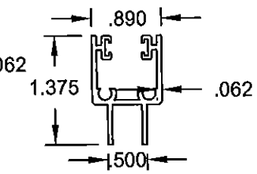

TOP RAIL
MAT'L: 6063–T5
#706
(11)

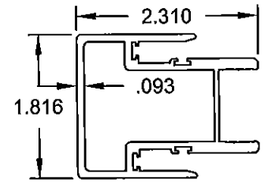

I.G. DOUBLE INTERLOCK
MATL:6063–T6
#745
(134)

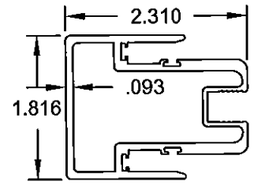

STD. DOUBLE INTERLOCK
MAT'L: 6063–T6
#734
(33)

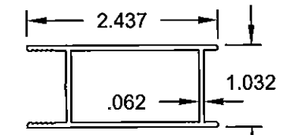

(101) I.G. LOCKSTILE
MAT'L: 6063–T6
#736

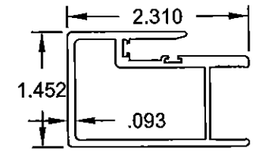

I.G. INTERLOCK
MATL: 6063–T6
#735
(106)

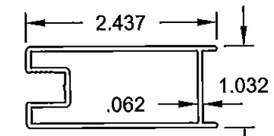

STD. LOCKING STILE
MAT'L: 6063–T6
#708
(1)

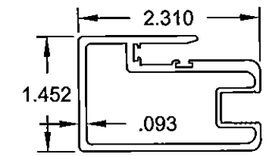

STD. INTERLOCK
MAT'L: 6063–T6
#705
(6)

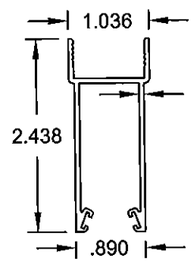

I.G. BOTTOM RAIL
MAT'L: 6063–T6
#619
(115)

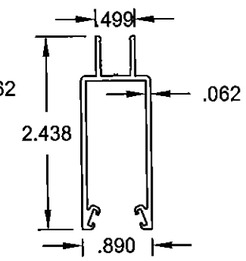

BOTTOM RAIL
MAT'L: 6063–T5
#707
(15)

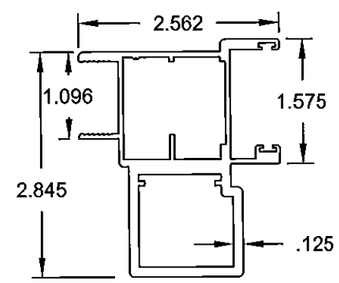

I.G. ASTRAGAL
MAT'L: 6063–T6
#737
(121)

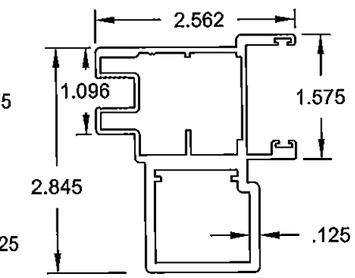

H.D. ASTRAGAL
MAT'L: 6063–T6
#720
(23)

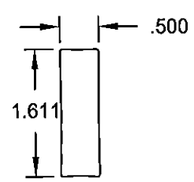

(45) REINFORCEMENT
MAT'L: 6063–T6
#755

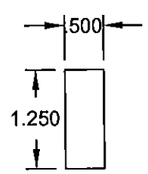

(46) REINFORCEMENT
MAT'L: 6063–T6
#1214

NOTE: ITEMS 45 AND 46 LENGTH = PANEL HT. – 4 1/4"

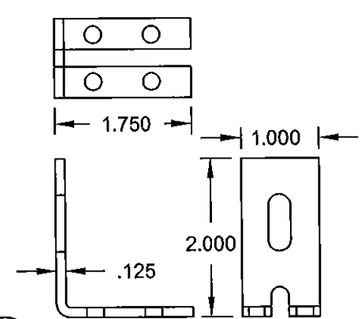

(77) FIXED PANEL CLIP, BOTTOM
MAT'L: 6063–T6
#717B

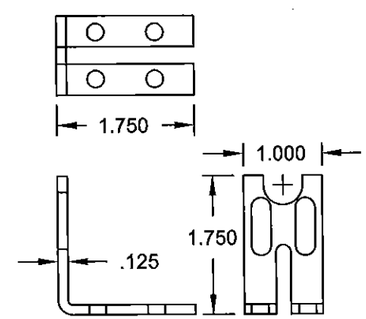

(76) FIXED PANEL CLIP, TOP
MAT'L: 6063–T6
#717

PRODUCT REVISED
as complying with the Florida
Building Code
Acceptance No 15-0609.09
Expiration Date May 22, 2018
By Manuel Perez
Miami Dade Product Control

ANTHONY LYNN MILLER
LICENSE
No. 58705
5/29/15
STATE OF FLORIDA
PROFESSIONAL ENGINEER

A. LYNN MILLER, P.E.
P.E.# 58705

Revsd By:	Date:	Revisions:	
F.K.	10/22/07	J	NO CHANGES THIS SHEET
J.J.	10/14/11	K	NO CHANGE THIS SHEET
L.M.	5/28/15	L	NO CHANGE THIS SHEET
Drawn By: F.K.	Date: 09/08/04	Checked By: J.J.	Date: 04/02/06

1070 TECHNOLOGY DRIVE
NOKOMIS, FL 34275

P.O. BOX 1529
NOKOMIS, FL 34274

PGT
Visibly Better

Description: EXTRUSIONS, PANELS

Title: ALUM. SLIDING GLASS WINDOW, NON-IMPACT

Series/Model:	Scale:	Sheet:	Drawing No.	Rev:
SGD2500	NTS	12 of 18	757-1	L

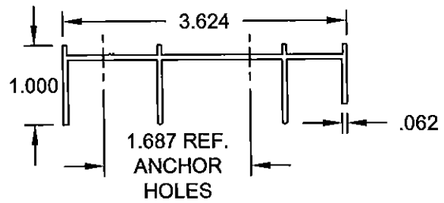

(71) 2 – TRACK HEAD
MAT'L: 6063–T6
#702

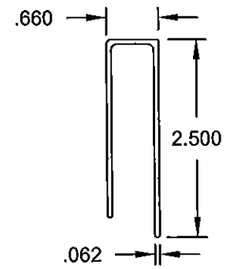

(70) HI–RISE TRACK ADAPTER
MAT'L: 6063–T5
#722A

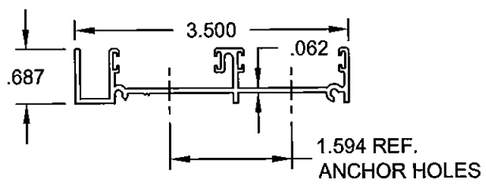

(73) 2 – TRACK JAMB
MAT'L: 6063–T6
#704

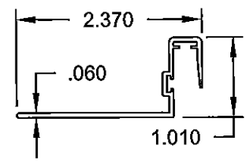

(69) HOOKSTRIP
MAT'L: 6063–T5
#740

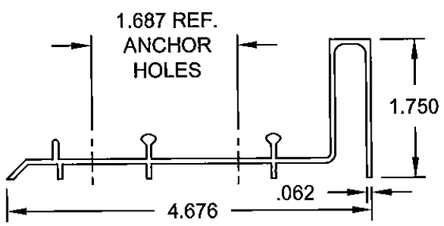

(72) 2 – TRACK EXTERIOR SILL
MAT'L: 6063–T6
#703B

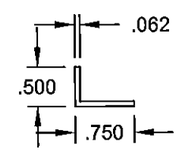

(203) OPTIONAL SCREEN
RAIL, POCKET
MAT'L: 6063–T5
#666

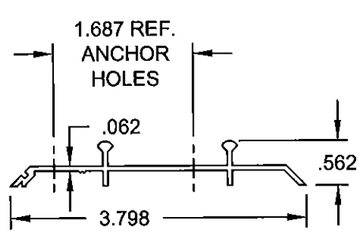

(74) 2 – TRACK INTERIOR SILL
MAT'L: 6063–T6
#637

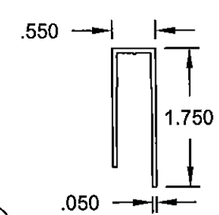

(225) HI–RISE TRACK ADAPTER
MAT'L: 6063–T5
#732

PRODUCT REVISED
as complying with the Florida
Building Code
Acceptance No 15-0609.09
Expiration Date May 22, 2018
By Manuel Perez
Miami Dade Product Control

ANTHONY LYNN MILLER
LICENSE
No. 58705
5/29/15
STATE OF
FLORIDA
PROFESSIONAL ENGINEER

A. LYNN MILLER, P.E.
P.E.# 58705

Revsd By:	Date:	Revisions:	
F.K.	10/22/07	J	DELETE ITEMS 201, 202 AND 204, 1-TRACK FRAMES
J.J.	10/14/11	K	NO CHANGE THIS SHEET
L.M.	5/28/15	L	NO CHANGE THIS SHEET
Drawn By: F.K.	Date: 09/08/04	Checked By: J.J.	Date: 04/02/06

1070 TECHNOLOGY DRIVE
NOKOMIS, FL 34275

P.O. BOX 1529
NOKOMIS, FL 34274

PGT
Visibly Better

Description: EXTRUSIONS, FRAME

Title: ALUM. SLIDING GLASS WINDOW, NON-IMPACT

Series/Model:	Scale:	Sheet:	Drawing No.	Rev:
SGD2500	NTS	13 of 18	757-1	L

ADDED FRAME COMPONENTS

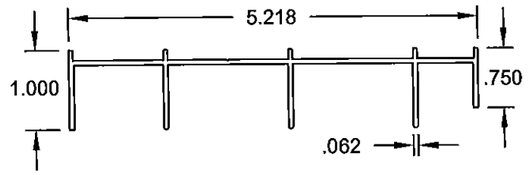

208 3 – TRACK HEAD
MAT'L: 6063–T6
#631

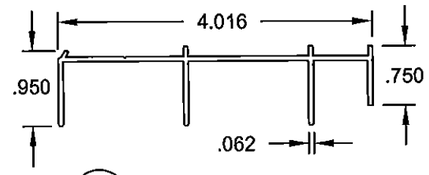

211 ADD–ON TRACK HEAD
MAT'L: 6063–T6
#613

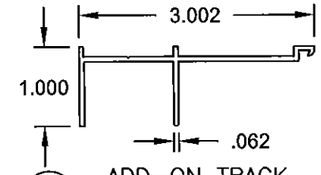

212 ADD–ON TRACK,
FOR FRAME HEAD
MAT'L: 6063–T6
#614

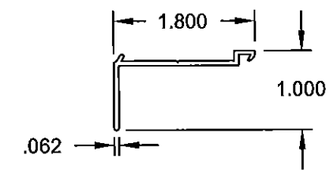

216 ADD–ON HEAD
MAT'L: 6063–T6
#634

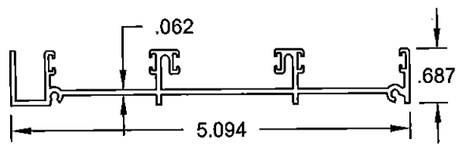

209 3 – TRACK JAMB
MAT'L: 6063–T6
#632

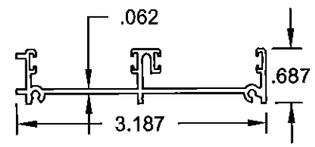

213 2 – TRACK FRAME,
JAMB ADD–ON
MAT'L: 6063–T6
#617

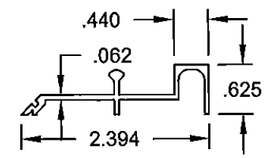

222 –TRACK SILL, LOW –RISE
EXTERIOR W/ ADD–ON
MAT'L: 6063–T6
#671

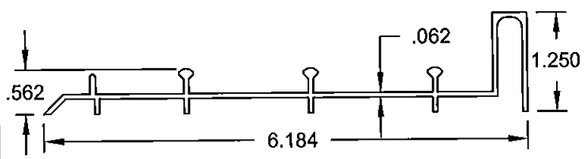

210 3 –TRACK SILL, EXTERIOR
W/ SCREEN RAIL
MAT'L: 6063–T6
#633

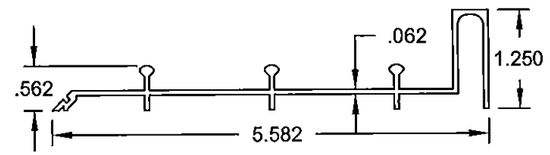

214 3 – TRACK ADD–ON SILL
MAT'L: 6063–T6
#615

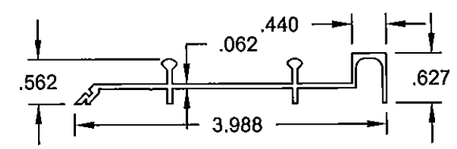

218 –TRACK SILL, LOW –RISE
EXTERIOR W/ ADD–ON
MAT'L: 6063–T6
#638

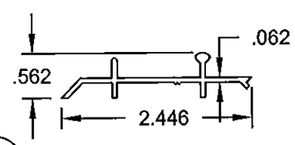

215 ADD–ON TRACK W/
SCREEN FOR FRAME SILL
MAT'L: 6063–T6
#616

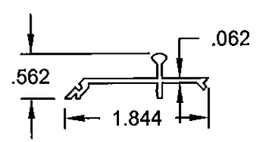

217 1 –TRACK ADD–ON SILL
MAT'L: 6063–T6
#635

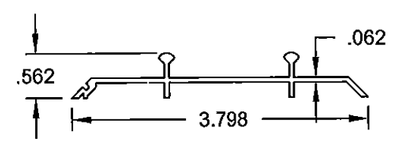

119 2 –TRACK SILL,
INTERIOR W/ ADD–ON
MAT'L: 6063–T6
#637

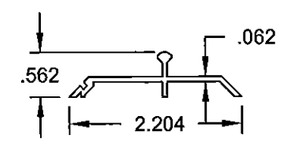

220 1 –TRACK SILL,
INTERIOR W/ ADD–ON
MAT'L: 6063–T6
#636

PRODUCT REVISED
as complying with the Florida
Building Code
Acceptance No 15-0609.09
Expiration Date May 22, 2018
By Manuel Perez
Miami Dade Product Control

ANTHONY LYNN MILLER
LICENSE
No. 58705
5/29/15
STATE OF
FLORIDA
PROFESSIONAL ENGINEER

A. LYNN MILLER, P.E.
P.E.# 58705

Revsd By:	Date:	Revisions:	
F.K.	10/22/07	J	NO CHANGES THIS SHEET
J.J.	10/14/11	K	NO CHANGE THIS SHEET
L.M.	5/28/15	L	NO CHANGE THIS SHEET
Drawn By: F.K.	Date: 09/08/04	Checked By:	Date:

1070 TECHNOLOGY DRIVE
NOKOMIS, FL 34275

P.O. BOX 1529
NOKOMIS, FL 34274

PGT
Visibly Better

Description: EXTRUSIONS, FRAME (CONTINUED)

Title: ALUM. SLIDING GLASS WINDOW, NON-IMPACT

Series/Model:	Scale:	Sheet:	Drawing No.	Rev:
SGD2500	NTS	14 of 18	757-1	L

(2) ANCHOR CLUSTER - C2

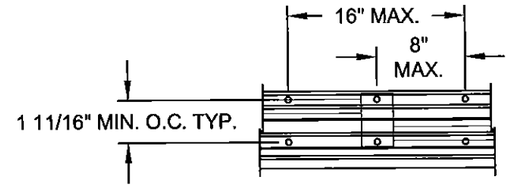

(6) ANCHOR CLUSTER - C6

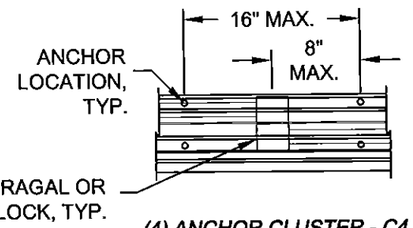

(4) ANCHOR CLUSTER - C4

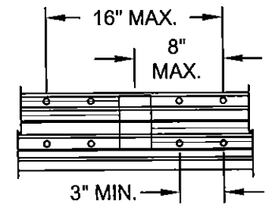

(8) ANCHOR CLUSTER - C8

HEAD & SILL ANCHOR CLUSTER DETAILS FOR ASTRAGALS AND INTERLOCKS

NOTES:

1. ANCHOR QUANTITIES BASED ON THE FOLLOWING SPACING:

   JAMBS AND P-HOOKS SPACING - 6" MAX. FROM CORNERS AND 28" MAX. O.C.

   HEAD AND SILL SPACING - 6" MAX. FROM CORNERS AND 22 5/16" MAX. O.C.

2. INSTALL PER ANCHOR QUANTITIES OF TABLE 4, SHEET 16, USING THE DIMENSIONAL CRITERIA OF NOTE 4. HEAD AND SILL CLUSTER ANCHORS ARE REQUIRED AT ASTRAGAL AND INTERLOCK LOCATIONS OF THEIR RESPECTIVE TRACK SECTIONS. SEE SHEET 18 FOR POTENTIAL ANCHOR LOCATIONS WITHIN HEAD, SILL AND JAMB TRACK SECTIONS.

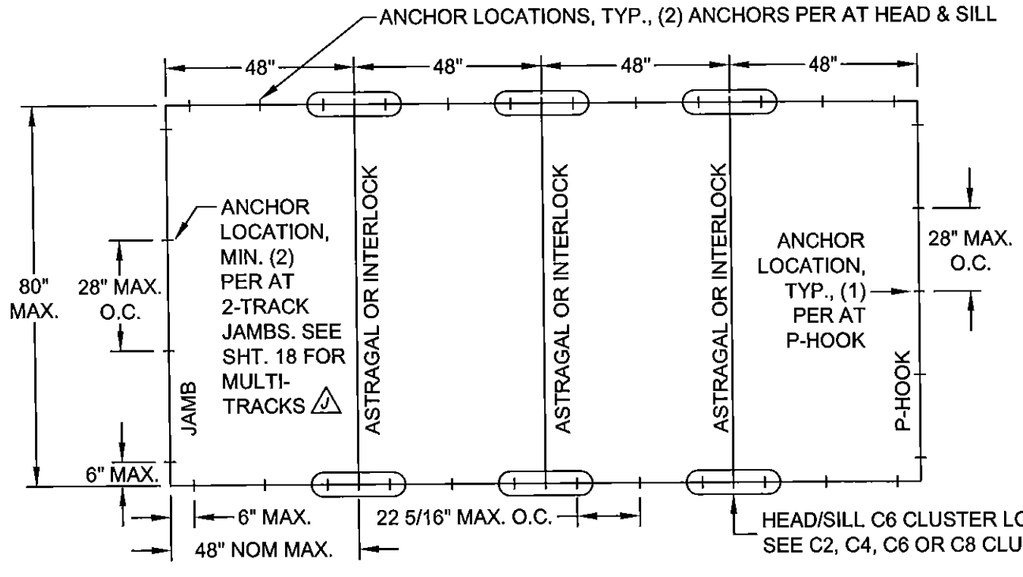

EXAMPLE SOLUTION
HEAD & SILL = 6" MAX. FROM CORNERS, 22 5/16" MAX. O.C. AND C6 AT EACH ASTRAGAL OR INTERLOCK.
JAMBS & P-HOOKS = 6" MAX. FROM CORNERS AND 28" MAX. O.C.

TOTAL AT HEAD = 30 ANCHORS
TOTAL AT SILL = 30 ANCHORS
TOTAL AT JAMB = 8 ANCHORS
TOTAL AT P-HOOK = 5 ANCHORS

FOUR PANEL DOOR ANCHORAGE LAYOUT EXAMPLE FROM TABLE 4, SHEET 16

PRODUCT REVISED
as complying with the Florida Building Code
Acceptance No 15-0609.09
Expiration Date May 27, 2018
By Miami Dade Product Control

ANTHONY LYNN MILLER
LICENSE
No. 58705
5/29/15
STATE OF FLORIDA
PROFESSIONAL ENGINEER

A. LYNN MILLER, P.E.
P.E.# 58705

Revsd By:	Date:	Revisions:	
F.K.	10/22/07	J	CORRECT DOOR HEIGHT DIMENSION. ADD P-HOOK MAX. SPACING & JAMB MIN./MULTI-TRACK NOTE.
Revsd By: J.J.	Date: 10/14/11	Revisions: K	NO CHANGE THIS SHEET
Revsd By: L.M.	Date: 5/28/15	Revisions: L	NO CHANGE THIS SHEET
Drawn By: F.K.	Date: 09/08/04	Checked By: J.J.	Date: 04/02/06

1070 TECHNOLOGY DRIVE
NOKOMIS, FL 34275

P.O. BOX 1529
NOKOMIS, FL 34274

PGT
Visibly Better

Description: ANCHORAGE SPACING AND CLUSTER DETAILS

Title: ALUM. SLIDING GLASS WINDOW, NON-IMPACT

Series/Model:	Scale:	Sheet:	Drawing No.	Rev:
SGD2500	NTS	15 of 18	757-1	L

HEAD & SILL ANCHOR CLUSTERS - JAMB & P-HOOK ANCHOR QUANTITIES

TABLE 4.

DP TABLE REF. >		SHEET 2, TABLE 1.									SHEET 2, TABLE 1.									SHEET 3, TABLE 2.									SHEET 3, TABLE 3.								
GLASS TYPE >		A									B OR D									B OR D									C OR D								
INTERLOCK & > REINFORCEMENT		SSN									SSN									SSR									SDR								
ANCHOR TYPE & SUBSTRATE ¯		HEAD & SILL CLUSTER			JAMB			P-HOOK			HEAD & SILL CLUSTER			JAMB			P-HOOK			HEAD & SILL CLUSTER			JAMB			P-HOOK			HEAD & SILL CLUSTER			JAMB			P-HOOK		
NOM. PANEL WIDTH x	UNIT HT.	2,3,WOOD	1,CONC	2,CONC	2,3,WOOD	1,CONC	2,CONC	2,3,WOOD	1,CONC	2,CONC	2,3,WOOD	1,CONC	2,CONC	2,3,WOOD	1,CONC	2,CONC	2,3,WOOD	1,CONC	2,CONC	2,3,WOOD	1,CONC	2,CONC	2,3,WOOD	1,CONC	2,CONC	2,3,WOOD	1,CONC	2,CONC	2,3,WOOD	1,CONC	2,CONC	2,3,WOOD	1,CONC	2,CONC	2,3,WOOD	1,CONC	2,CONC
24.000 x	36.000	C4	C4	C4	4	4	4	3	3	3	C4	C4	C4	4	4	6	3	3	3	C4	C4	C4	4	4	6	3	3	3	C4	C4	C4	4	4	6	3	3	3
	42.000	C4	C4	C4	6	6	6	3	3	3	C4	C4	C4	6	6	6	3	3	3	C4	C4	C4	6	6	6	3	3	3	C4	C4	C4	6	6	6	3	3	3
	48.000	C4	C4	C4	6	6	6	3	3	3	C4	C4	C4	6	6	6	3	3	3	C4	C4	C4	6	6	6	3	3	3	C4	C4	C4	6	6	6	3	3	3
	54.000	C4	C4	C4	6	6	6	3	3	3	C6	C6	C4	6	6	6	4	4	4	C6	C6	C4	6	6	6	4	4	4	C6	C6	C4	6	6	6	4	4	4
	60.000	C4	C4	C4	6	6	6	3	3	3	C6	C6	C4	6	6	8	4	4	4	C6	C6	C4	6	6	8	4	4	4	C6	C6	C4	6	6	8	4	4	4
	72.000	NOT AVAILABLE									C6	C6	C6	8	8	8	5	5	4	C6	C6	C6	8	8	8	4	5	4	C6	C6	C6	8	8	8	5	5	5
	80.000										C6	C6	C6	8	8	8	5	5	4	C6	C6	C6	8	8	8	4	5	4	C8	C8	C6	8	8	8	5	5	5
30.000 x	36.000	C4	C4	C4	4	4	4	3	3	3	C4	C4	C4	6	6	6	4	4	4	C4	C4	C4	6	6	6	4	4	4	C4	C4	C4	6	6	6	4	4	4
	42.000	C4	C4	C4	6	6	6	3	3	3	C6	C6	C4	6	6	6	4	4	3	C6	C6	C4	6	6	6	3	4	3	C6	C6	C4	6	6	6	4	4	3
	48.000	C4	C4	C4	6	6	6	3	3	3	C6	C6	C4	6	6	6	4	4	4	C6	C6	C4	6	6	6	4	4	4	C6	C6	C4	6	6	6	4	4	4
	54.000	C4	C4	C4	6	6	6	3	3	3	C6	C6	C6	8	8	8	5	5	4	C6	C6	C4	8	8	8	5	5	4	C6	C6	C6	8	8	8	5	5	4
	60.000	C4	C4	C4	6	6	6	3	3	3	C6	C8	C6	8	8	8	5	5	5	C6	C6	C6	8	8	8	5	5	5	C6	C8	C6	8	8	8	5	5	5
	72.000	NOT AVAILABLE									C6	C6	C6	8	8	8	5	5	4	C6	C6	C6	8	8	8	5	5	4	C8	C8	C6	8	10	10	6	6	5
	80.000										C6	C6	C6	8	8	8	5	5	4	C6	C6	C6	8	8	8	5	5	4	C8	C8	C6	8	10	10	6	6	5
36.000 x	36.000	C4	C4	C4	4	4	6	3	3	3	C4	C4	C4	6	6	6	4	4	4	C4	C4	C4	4	4	6	3	4	3	C4	C4	C4	6	6	6	4	4	4
	42.000	C4	C4	C4	6	6	6	3	3	3	C6	C6	C4	6	6	6	4	4	4	C4	C4	C4	6	6	6	3	3	3	C6	C6	C4	6	6	6	4	4	4
	48.000	C4	C4	C4	6	6	6	3	3	3	C6	C6	C4	6	6	8	4	4	4	C4	C4	C4	6	6	6	3	4	3	C6	C6	C4	6	6	8	4	4	4
	54.000	C4	C4	C4	6	6	6	3	3	3	C6	C6	C6	8	8	8	5	5	5	C6	C6	C4	6	6	6	4	4	4	C6	C6	C6	8	8	8	5	5	5
	60.000	C4	C4	C4	6	6	6	3	3	3	C8	C8	C6	8	8	8	5	5	5	C6	C6	C4	6	6	8	4	5	4	C8	C8	C6	8	8	8	5	5	5
	72.000	NOT AVAILABLE									C6	C8	C6	8	8	8	5	5	5	C6	C6	C6	8	8	8	5	5	5	C8	C8	C6	10	10	10	6	6	6
	80.000										C6	C6	C6	8	8	8	5	5	5	C6	C6	C6	8	8	8	5	5	5	C8	C8	C6	10	10	10	6	6	5
42.000 x	36.000	C2	C2	C2	4	6	6	4	4	3	C2	C2	C2	6	6	6	4	4	4	C2	C2	C2	4	4	4	3	3	3	C2	C2	C2	6	6	6	4	4	4
	42.000	C2	C2	C2	6	6	6	3	3	3	C2	C2	C2	6	6	6	3	3	3	C2	C2	C2	6	6	6	3	3	3	C2	C2	C2	6	6	6	3	3	3
	48.000	C2	C2	C2	6	6	6	3	3	3	C4	C4	C2	6	6	6	4	4	4	C2	C2	C2	6	6	6	3	3	3	C4	C4	C2	6	6	6	4	4	4
	54.000	C2	C2	C2	6	6	6	3	3	3	C4	C4	C4	6	6	8	4	4	4	C4	C4	C2	6	6	6	3	4	3	C4	C4	C4	6	6	8	4	4	4
	60.000	C4	C4	C2	6	6	6	3	3	3	C4	C4	C4	8	8	8	5	5	5	C4	C4	C4	6	6	6	4	4	4	C4	C4	C4	8	8	8	5	5	5
	72.000	NOT AVAILABLE									C6	C6	C4	8	8	8	5	5	5	C4	C4	C4	8	8	8	4	4	4	C6	C6	C4	8	8	8	5	5	5
	80.000										C6	C6	C4	8	8	8	5	5	5	C6	C6	C4	8	8	8	5	5	4	C6	C6	C6	10	10	10	6	6	5
48.000 x	36.000	C2	C2	C2	4	4	6	3	4	3	C2	C2	C2	6	6	6	4	4	3	C2	C2	C2	4	4	4	3	3	2	C2	C2	C2	6	6	6	4	4	3
	42.000	C2	C2	C2	6	6	6	3	3	3	C2	C2	C2	6	6	6	3	3	3	C2	C2	C2	6	6	6	3	3	3	C2	C2	C2	6	6	6	3	3	3
	48.000	C2	C2	C2	6	6	6	3	3	3	C2	C2	C2	6	6	6	3	3	3	C2	C2	C2	6	6	6	3	3	3	C2	C2	C2	6	6	6	3	3	3
	54.000	C2	C2	C2	6	6	6	3	3	3	C4	C4	C2	6	6	6	4	4	4	C2	C2	C2	6	6	6	3	3	3	C4	C4	C2	6	6	6	4	4	4
	60.000	C4	C4	C2	6	6	6	3	3	3	C4	C4	C4	6	6	8	4	4	4	C4	C4	C2	6	6	6	3	4	3	C4	C4	C4	6	6	8	4	4	4
	72.000	NOT AVAILABLE									C4	C4	C4	8	8	8	5	5	5	C4	C4	C4	8	8	8	4	4	4	C4	C4	C4	8	8	8	5	5	5
	80.000										C6	C6	C4	8	8	8	5	5	5	C4	C4	C4	8	8	8	4	4	4	C6	C6	C4	8	8	8	5	5	5

SEE EXAMPLE ANCHOR LAYOUT ON SHEET 15

TABLE KEYS:

1. ANCHOR TYPES:
   1 - 1/4" ELCO ULTRACON ⚠1
   2 - 1/4" ELCO SS4 CRETE-FLEX
   3 - #12 STEEL SCREW (G5)

2. GLASS TYPES:
   A - 3/16" ANNEALED
   B - 3/16" TEMPERED
   C - 1/4" TEMPERED
   D - 5/8" TEMPERED I.G.

3. INTERLOCK AND REINFORCEMENT KEY:

   SSN - SINGLE/SINGLE WITH NO REINFORCEMENT.

   SSR - SINGLE/SINGLE WITH FULL REINFORCEMENT.

   SDR - SINGLE/DOUBLE WITH FULL REINFORCEMENT.

PRODUCT REVISED
as complying with the Florida Building Code
Acceptance No 15-0609.09
Expiration Date May 22, 2018
By Manuel Perez
Miami Dade Product Control

ANTHONY LYNN MILLER
LICENSE
No. 58705
5/29/15
STATE OF FLORIDA
PROFESSIONAL ENGINEER

A. LYNN MILLER, P.E.
P.E.# 58705

Revsd By:	Date:	Revisions:	
F.K.	10/22/07	J	NO CHANGES THIS SHEET
J.J.	10/14/11	K	NO CHANGE THIS SHEET
L.M.	5/28/15	L	CHANGE ANCHOR TYPE 1 TO ULTRACON
Drawn By: F.K.	Date: 09/08/04	Checked By: J.J.	Date: 04/02/06

1070 TECHNOLOGY DRIVE
NOKOMIS, FL 34275

P.O. BOX 1529
NOKOMIS, FL 34274

PGT
Visibly Better

Description: ANCHORAGE TABLE

Title: ALUM. SLIDING GLASS WINDOW, NON-IMPACT

Series/Model:	Scale:	Sheet:	Drawing No.	Rev:
SGD2500	NTS	16 of 18	757-1	L

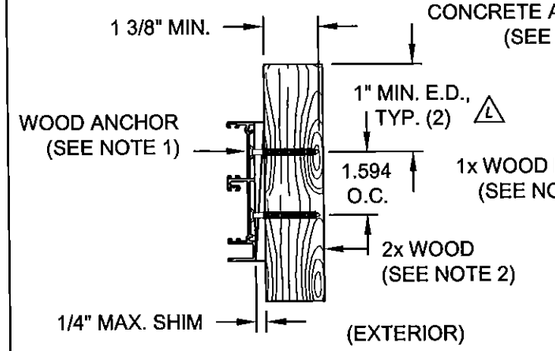

DETAIL - F

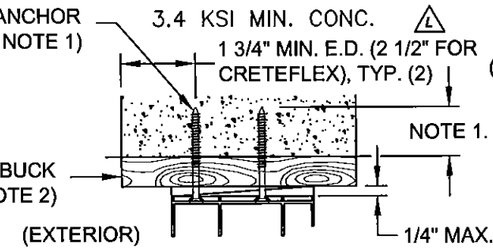

DETAIL - C

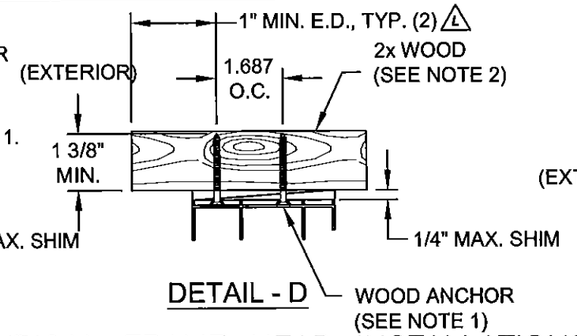

DETAIL - D

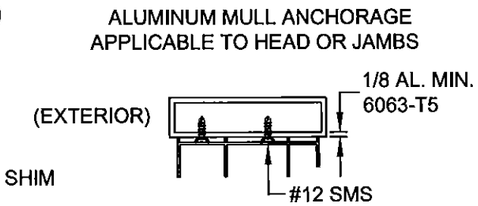

DETAIL - J

TYPICAL FRAME HEAD INSTALLATIONS

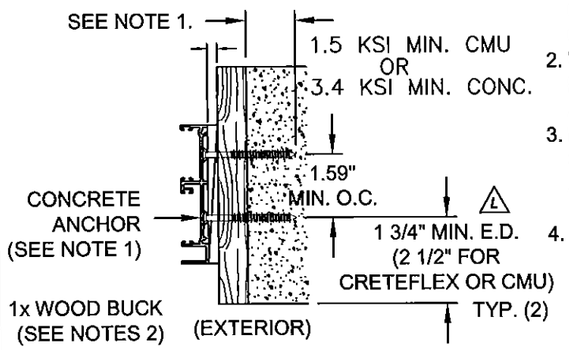

DETAIL - E

TYPICAL FRAME JAMB INSTALLATIONS

NOTES:

1. FOR CONCRETE INSTALLATIONS IN MIAMI-DADE COUNTY, USE ONLY MIAMI-DADE COUNTY APPROVED ELCO 1/4" ULTRACONS OR 1/4" SS4 CRETE-FLEX EMBEDDED 1 3/4" MIN. THE MINIMUM DISTANCE FROM CENTER OF ANCHOR TO CONCRETE EDGE IS 1 3/4" (2 1/2" FOR CRETEFLEX OR CMU). FOR WOOD INSTALLATIONS USE #12 SCREWS OR ELCO 1/4" SS4 CRETE-FLEX ANCHORS EMBEDDED 1 3/8" MIN.
2. WOOD BUCKS DEPICTED IN THE SECTIONS ON THIS PAGE AS 1x ARE BUCKS WHOSE TOTAL THICKNESS IS LESS THAN 1 1/2". WOOD BUCKS DEPICTED AS 2x ARE 1 1/2" THICK OR GREATER. INSTALLATION TO THE SUBSTRATE OF WOOD BUCKS TO BE ENGINEERED BY OTHERS OR AS APPROVED BY AUTHORITY HAVING JURISDICTION.
3. FOR ATTACHMENT TO ALUMINUM: THE MATERIAL SHALL BE A MINIMUM STRENGTH OF 6063-T5 AND A MINIMUM OF 1/8" THICK. THE ALUMINUM STRUCTURAL MEMBER SHALL BE OF A SIZE TO PROVIDE FULL SUPPORT TO THE DOOR FRAME SIMILAR TO THAT SHOWN IN DETAILS B, D AND F ABOVE FOR 2x WOOD BUCKS. THE ANCHOR SHALL BE A #12 SHEET METAL SCREW WITH FULL ENGAGEMENT INTO THE ALUMINUM (SEE DETAIL J). IF THESE CRITERIA ARE MET THE PRESSURES AND ANCHORAGE SPACING FOR #12 SCREWS SHOWN IN THIS NOA MAY BE USED.
4. IF SILL IS TIGHT TO SUBSTRATE, GROUT OR OTHER MATERIAL IS NOT REQUIRED. IF USED, NON-SHRINK, NON-METALLIC GROUT (3350 PSI MIN.), (DONE BY OTHERS) MUST FULLY SUPPORT THE ENTIRE LENGTH OF THE SILL THAT IS NOT TIGHT TO THE SUBSTRATE, AND TRANSFER SHEAR LOAD TO SUBSTRATE. IF SUBSTRATE IS WOOD, 30# FELT PAPER OR MASTIC IS REQUIRED BETWEEN THE GROUT AND WOOD SUBSTRATE, OR AS APPROVED BY THE AUTHORITY HAVING JURISDICTION.

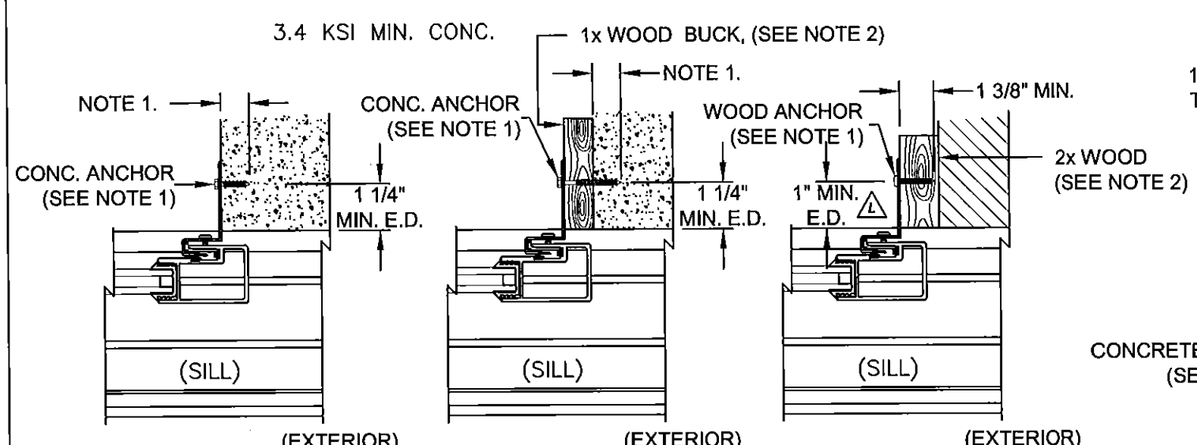

DETAIL - G DETAIL - H DETAIL - I

TYPICAL POCKET P-HOOK INSTALLATIONS

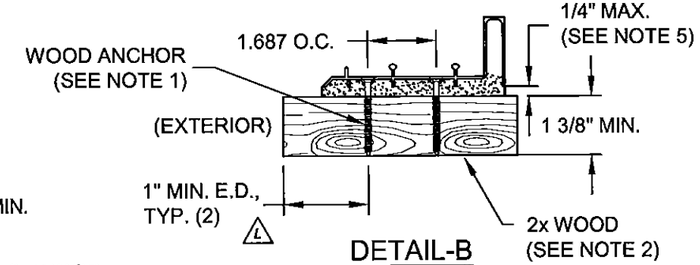

DETAIL-B

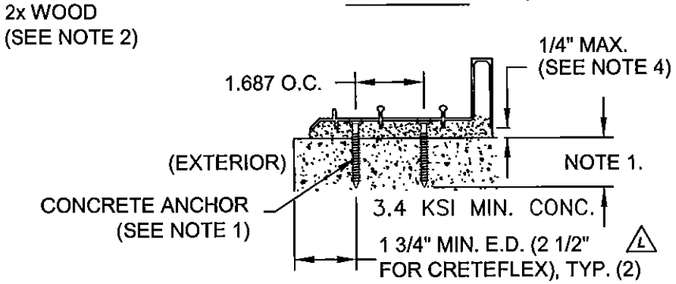

DETAIL-A

TYPICAL FRAME SILL INSTALLATIONS

PRODUCT REVISED
as complying with the Florida Building Code
Acceptance No 15-0609.09
Expiration Date May 22, 2018
By Manuel Perez
Miami Dade Product Control

ANTHONY LYNN MILLER
LICENSE
No. 58705
STATE OF FLORIDA
PROFESSIONAL ENGINEER
5/29/15

A. LYNN MILLER, P.E.
P.E.# 58705

Revsd By:	Date:	Revisions:	
F.K.	10/22/07	J	NO CHANGES THIS SHEET
J.J.	10/14/11	K	NO CHANGE THIS SHEET
L.M.	5/28/15	L	CHANGE EDGE DISTANCE FOR CRETEFLEX & CMU, CHANGE TAPCON TO ULTRACON, ADD WOOD EDGE DISTANCE
Drawn By: F.K.	Date: 09/08/04	Checked By: J.J.	Date: 04/02/06

1070 TECHNOLOGY DRIVE
NOKOMIS, FL 34275
P.O. BOX 1529
NOKOMIS, FL 34274

PGT Visibly Better

Description: ANCHORAGE DETAILS
Title: ALUM. SLIDING GLASS WINDOW, NON-IMPACT

Series/Model:	Scale:	Sheet:	Drawing No.	Rev:
SGD2500	1/4	17 of 18	757-1	L

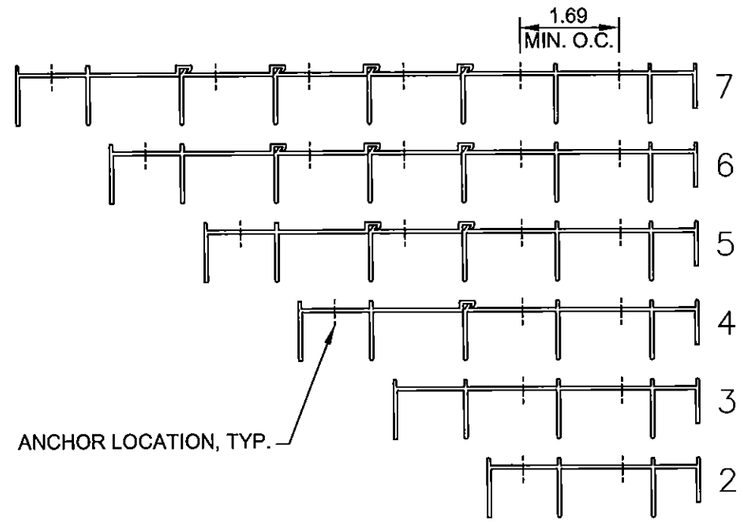

JAMB INTERIOR

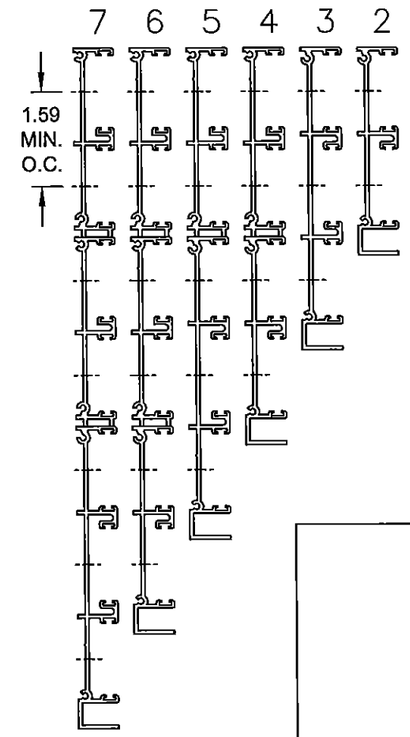

JAMB EXTERIOR

NOTES ON POTENTIAL ANCHOR LOCATIONS:

1. ANCHOR CLUSTER AND QUANTITY INFORMATION FROM TABLE 4, SHEET 16, APPLIES AS THE MINIMUM REQUIREMENT FOR ALL TRACK CONFIGURATIONS. ANCHORS MAY BE STAGGERED WITHIN TRACK SECTIONS EXCEPT THAT THE ASTRAGAL AND INTERLOCK CLUSTERS MUST BE LOCATED IN THE TRACK ON WHICH ASTRAGAL AND/OR INTERLOCKS ARE POSITIONED WHEN THE DOOR(S) ARE IN THE CLOSED AND LOCKED POSTION. MINIMUM ON-CENTER DIMENSIONS FOR ANCHORS ARE 1.69" AT HEAD AND SILL AND 1.59" FOR JAMBS.

2. EMBEDMENT AND EDGE DISTANCES SHOWN FOR 2 TRACK FRAMES ON SHEET 17 ARE ALSO APPLICABLE TO ALL MULTI-TRACK SECTIONS.

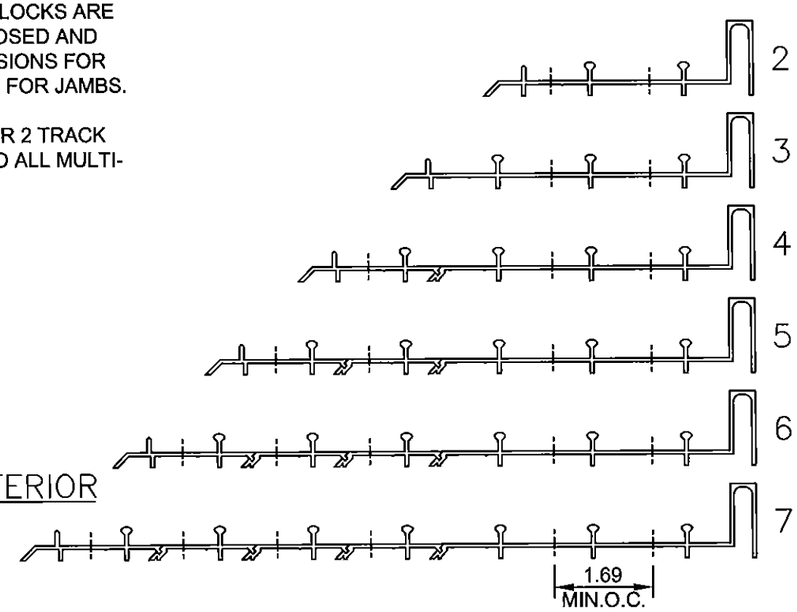

HEAD/SILL EXTERIOR

HEAD/SILL INTERIOR

PRODUCT REVISED
as complying with the Florida
Building Code
Acceptance No 15-0609.09
Expiration Date May 22, 2018
By Manuel Sera
Miami Dade Product Control

ANTHONY LYNN MILLER
LICENSE
No. 58705
5/29/15
STATE OF FLORIDA
PROFESSIONAL ENGINEER

A. LYNN MILLER, P.E.
P.E.# 58705

Revsd By:	Date:	Revisions:	
F.K.	10/22/07	J	DELETE 1-TRACK HEAD, SILL & JAMB.
J.J.	10/14/11	K	NO CHANGE THIS SHEET
L.M.	5/28/15	L	NO CHANGE THIS SHEET
Drawn By: F.K.	Date: 09/08/04	Checked By: J.J.	Date: 04/02/06

1070 TECHNOLOGY DRIVE
NOKOMIS, FL 34275

P.O. BOX 1529
NOKOMIS, FL 34274

PGT
Visibly Better

Description: FRAME, POTENTIAL ANCHOR LOCATIONS

Title: ALUM. SLIDING GLASS WINDOW, NON-IMPACT

Series/Model:	Scale:	Sheet:	Drawing No.	Rev:
SGD2500	1/4	18 of 18	757-1	L