MIAMI-DADE COUNTY
DEPARTMENT OF REGULATORY AND ECONOMIC RESOURCES (RER)
BOARD AND CODE ADMINISTRATION DIVISION

MIAMI-DADE COUNTY
PRODUCT CONTROL SECTION
11805 SW 26 Street, Room 208
T (786) 315-2590 F (786) 315-2599
www.miamidade.gov/economy

NOTICE OF ACCEPTANCE (NOA)

PGT Industries, Inc.
1070 Technology Drive
North Venice, FL 34275

SCOPE:

This NOA is being issued under the applicable rules and regulations governing the use of construction materials. The documentation submitted has been reviewed and accepted by Miami-Dade County RER - Product Control Section to be used in Miami Dade County and other areas where allowed by the Authority Having Jurisdiction (AHJ).

This NOA shall not be valid after the expiration date stated below. The Miami-Dade County Product Control Section (In Miami-Dade County) and/or the AHJ (in areas other than Miami-Dade County) reserve the right to have this product or material tested for quality assurance purposes. If this product or material fails to perform in the accepted manner, the manufacturer will incur the expense of such testing and the AHJ may immediately revoke, modify, or suspend the use of such product or material within their jurisdiction. RER reserves the right to revoke this acceptance, if it is determined by Miami–Dade County Product Control Section that this product or material fails to meet the requirements of the applicable building code.

This product is approved as described herein, and has been designed to comply with the Florida Building Code, including the High Velocity Hurricane Zone.-

DESCRIPTION: Series "SGD-3030" Aluminum Sliding Glass Door - L.M.I.

APPROVAL DOCUMENT: Drawing No. **3030-LM-120**, titled "Alum. SGD Series 3030, (LM & SM)", sheets 1 through 18 of 18, dated 08/01/07, with revision **D** dated 06/02/15, prepared by manufacturer, signed and sealed by Anthony Lynn Miller, P.E., bearing the Miami-Dade County Product Control Revision stamp with the Notice of Acceptance number and expiration date by the Miami-Dade County Product Control Section.

MISSILE IMPACT RATING: Large and Small Missile Impact Resistant

LABELING: Each unit shall bear a permanent label with the manufacturer's name or logo, city, state, model/series, and following statement: "Miami-Dade County Product Control Approved", unless otherwise noted herein.

RENEWAL of this NOA shall be considered after a renewal application has been filed and there has been no change in the applicable building code negatively affecting the performance of this product.

TERMINATION of this NOA will occur after the expiration date or if there has been a revision or change in the materials, use, and/or manufacture of the product or process. Misuse of this NOA as an endorsement of any product, for sales, advertising or any other purposes shall automatically terminate this NOA. Failure to comply with any section of this NOA shall be cause for termination and removal of NOA.

ADVERTISEMENT: The NOA number preceded by the words Miami-Dade County, Florida, and followed by the expiration date may be displayed in advertising literature. If any portion of the NOA is displayed, then it shall be done in its entirety.

INSPECTION: A copy of this entire NOA shall be provided to the user by the manufacturer or its distributors and shall be available for inspection at the job site at the request of the Building Official.

This NOA **revises NOA# 12-1114.03** and consists of this page 1 and evidence pages E-1 and E-2, as well as approval document mentioned above.

The submitted documentation was reviewed by **Manuel Perez, P.E.**

MIAMI-DADE COUNTY APPROVED

9/3/15

PGT Industries, Inc.

NOTICE OF ACCEPTANCE: EVIDENCE SUBMITTED

A. DRAWINGS

1. Manufacturer's die drawings and sections.
   (Submitted under NOA No. 07-0831.09)
2. Drawing No. **3030-LM-120**, titled "Alum. SGD Series 3030, (LM & SM)", sheets 1 through 18 of 18, dated 08/01/07, with revision **D** dated 06/02/15, prepared by manufacturer, signed and sealed by Anthony Lynn Miller, P.E.

B. TESTS

1. Test reports on: 1) Air Infiltration Test, per FBC, TAS 202-94
   2) Uniform Static Air Pressure Test, Loading per FBC TAS 202-94
   3) Water Resistance Test, per FBC, TAS 202-94
   4) Large Missile Impact Test per FBC, TAS 201-94
   5) Cyclic Wind Pressure Loading per FBC, TAS 203-94
   6) Forced Entry Test, SGD types A-A, B-A and C-A, per ASTM F 842-04 and FBC 2411 3.2.1, TAS 202-94

   along with marked-up drawings and installation diagram of aluminum sliding glass door, prepared by Architectural Testing, Inc., Test Report No. **ATI-72125.01-401-18**, dated 08/20/07, signed and sealed by Joseph A. Reed, P.E.
   (Submitted under NOA No. 07-0831.09)

C. CALCULATIONS

1. Anchor verification calculations and structural analysis, complying with **FBC-5th Edition (2014)**, dated 06/08/15, prepared by manufacturer, signed and sealed by Anthony Lynn Miller, P.E.
2. Glazing complies with **ASTM E1300-04**

D. QUALITY ASSURANCE

1. Miami-Dade Department of Regulatory and Economic Resources (RER).

E. MATERIAL CERTIFICATIONS

1. Notice of Acceptance No. **14-0916.11** issued to **Kuraray America, Inc.** for their **"SentryGlas® (Clear and White) Glass Interlayers"** dated 06/25/15, expiring on 07/04/18.

Manuel Perez, P.E.
Product Control Examiner
NOA No. 15-0612.06
Expiration Date: February 14, 2018
Approval Date: September 10, 2015

NOTICE OF ACCEPTANCE: EVIDENCE SUBMITTED

F. STATEMENTS

1. Statement letter of conformance, complying with **FBC-5th Edition (2014)**, dated June 5, 2015, issued by manufacturer, signed and sealed by Anthony Lynn Miller, P.E.
2. Statement letter of no financial interest, dated June 5, 2015, issued by manufacturer, signed and sealed by Anthony Lynn Miller, P.E.

G. OTHERS

1. Notice of Acceptance No. **12-1114.03**, issued to PGT Industries for their Series "SGD-3030" Aluminum Sliding Glass Door - L.M.I., approved on 01/10/13 and expiring on 02/14/18.

Manuel Perez, P.E.
Product Control Examiner
NOA No. 15-0612.06
Expiration Date: February 14, 2018
Approval Date: September 10, 2015

GENERAL NOTES: LARGE AND SMALL MISSILE IMPACT SLIDING GLASS DOOR

1. GLAZING OPTIONS: 9/16" LAMINATED GLASS CONSISTING OF (2) LITES OF 1/4" HEAT STRENGTHENED GLASS WITH AN .090 SG "SENTRYGLAS" INTERLAYER BY KURARAY AMERICA, INC.

2. CONFIGURATIONS: OX, XO, OXO, OXXO

3. DESIGN PRESSURES: SEE TABLE
A. NEGATIVE DESIGN LOADS BASED ON TESTED PRESSURE AND GLASS TABLES ASTM E 1300.
B. POSITIVE DESIGN LOADS BASED ON TESTED PRESSURE, WATER TEST PRESSURE AND GLASS TABLES ASTM E 1300.

4. ANCHORAGE: THE 33 1/3% STRESS INCREASE HAS NOT BEEN USED IN THE DESIGN OF THIS PRODUCT. MATERIALS, INCLUDING BUT NOT LIMITED TO STEEL SCREWS, THAT COME INTO CONTACT WITH OTHER DISSIMILAR MATERIALS SHALL MEET THE REQUIREMENTS OF THE FLORIDA BUILDING CODE. FOR ANCHORAGE DETAILS SEE SHEETS 12-15.

5. SHUTTER REQUIREMENT: NONE REQUIRED.

6. INSTALLATION SCREWS, FRAME AND PANEL CORNERS TO BE SEALED.

7. REFERENCES: TEST REPORTS, (ATI) 72125.01-401-18; ELCO TEXTRON NOA'S; ANSI/AF&PA NDS FOR WOOD CONSTRUCTION; ALUMINUM DESIGN MANUAL

8. THIS PRODUCT HAS BEEN DESIGNED & TESTED TO COMPLY WITH THE REQUIREMENTS OF THE FLORIDA BUILDING CODE, INCLUDING THE HIGH VELOCITY HURRICANE ZONE (HVHZ).

9. THE MINIMUM WIDTH FOR THE OPERABLE DOOR OF "MEANS OF EGRESS DOORS" MUST COMPLY WITH THE FLORIDA BUILDING CODE.

10. FOR CONCRETE OR CONCRETE BLOCK APPLICATIONS IN MIAMI-DADE COUNTY, USE ONLY MIAMI-DADE COUNTY APPROVED 1/4" ELCO ANCHORS. MINIMUM DISTANCE FROM ANCHOR TO CONCRETE EDGE IS 1-3/4". HEAD/SILL ANCHORS SHOULD NOT BE INSTALLED WITHIN 3" OF EACH OTHER. JAMB ANCHORS SHOULD NOT BE INSTALLED WITHIN 6" OF EACH OTHER. FOR WOOD APPLICATIONS IN MIAMI-DADE COUNTY, USE #14 WOOD SCREWS. SCREW THREADS MUST BE COMPLETELY EMBEDDED INTO SUBSTRATE.

11. QUALIFIED CONFIGURATIONS:

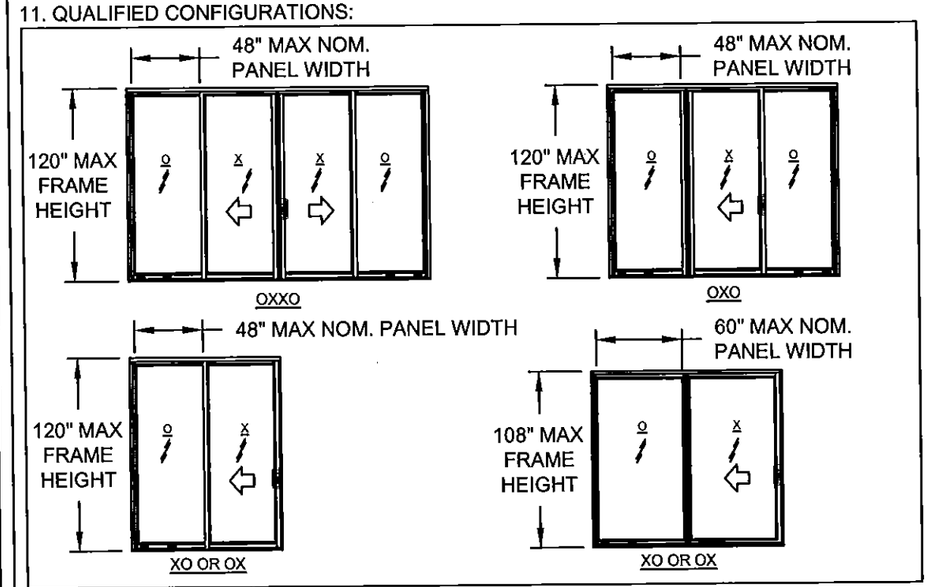

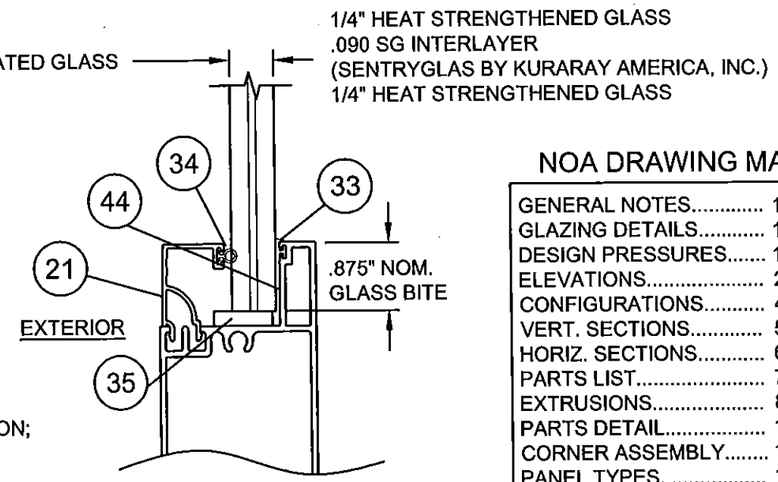

GLAZING DETAIL

NOA DRAWING MAP

GENERAL NOTES..... 1
GLAZING DETAILS..... 1
DESIGN PRESSURES..... 1
ELEVATIONS..... 2-3
CONFIGURATIONS..... 4
VERT. SECTIONS..... 5
HORIZ. SECTIONS..... 6
PARTS LIST..... 7
EXTRUSIONS..... 8-9
PARTS DETAIL..... 10-11
CORNER ASSEMBLY..... 12
PANEL TYPES..... 12
ANCHORAGE..... 13-15
DP TABLES..... 16-18

DESIGN PRESSURES
(ALL SIZES & CONFIGURATIONS)

GLASS TYPE	POS	NEG
9/16" HEAT STRENGTHENED LAMI	+120.0	-120.0

BASED ON 1/4" MASONRY ANCHORS IN CONCRETE USING ANCHOR PLATE AND 1/4" SHIMS. OTHER ANCHOR TYPES AND SUBSTRATES AVAILABLE, SOME WITH DESIGN PRESSURE LIMITATIONS. SEE ENCLOSED SHEETS FOR SPECIFICS.

PRODUCT REVISED
as complying with the Florida Building Code
Acceptance No 15-0612.06
Expiration Date Feb. 14, 2018
By Manuel Perez
Miami Dade Product Control

ANTHONY LYNN MILLER
LICENSE
No. 58705
6/8/15
STATE OF FLORIDA
PROFESSIONAL ENGINEER
A. LYNN MILLER, P.E.
P.E.# 58705

Revsd By:	Date:	Revisions:	
J.R.	06/02/15	D	UPDATE TO 2014 FBC, (5TH EDITION)
Revsd By:	Date:	Revisions:	
Revsd By:	Date:	Revisions:	
Drawn By: J.R.	Date: 8/01/07	Checked By:	Date:

1070 TECHNOLOGY DRIVE
NOKOMIS, FL 34275
P.O. BOX 1529
NOKOMIS, FL 34274

PGT Visibly Better

Description: GENERAL NOTES, GLAZING DETAILS, DP

Title: ALUM. SGD SERIES 3030, (LM & SM)

Series/Model:	Scale:	Sheet:	Drawing No.	Rev:
SGD3030	NTS	1 of 18	3030-LM-120	D

EXAMPLE OF:

C6+4
14

ANCHORAGE FROM THE TABLES ON SHEETS 16 - 18.

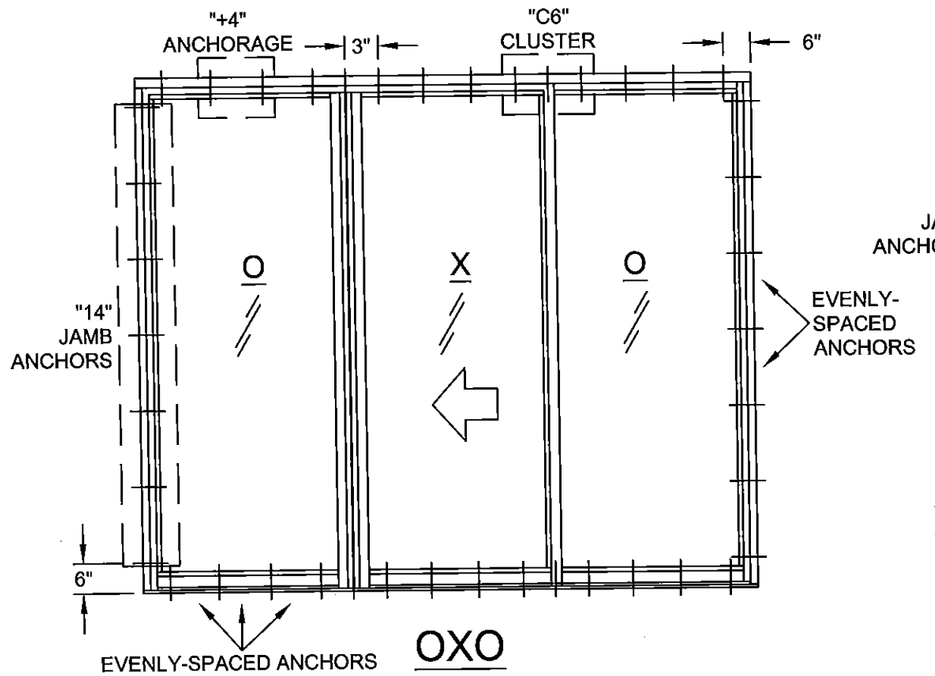

OXO

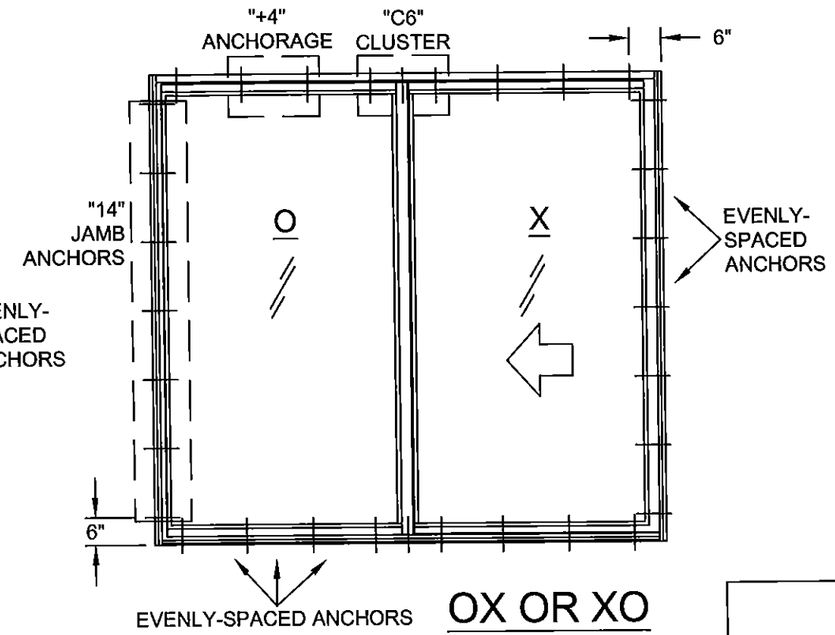

OX OR XO

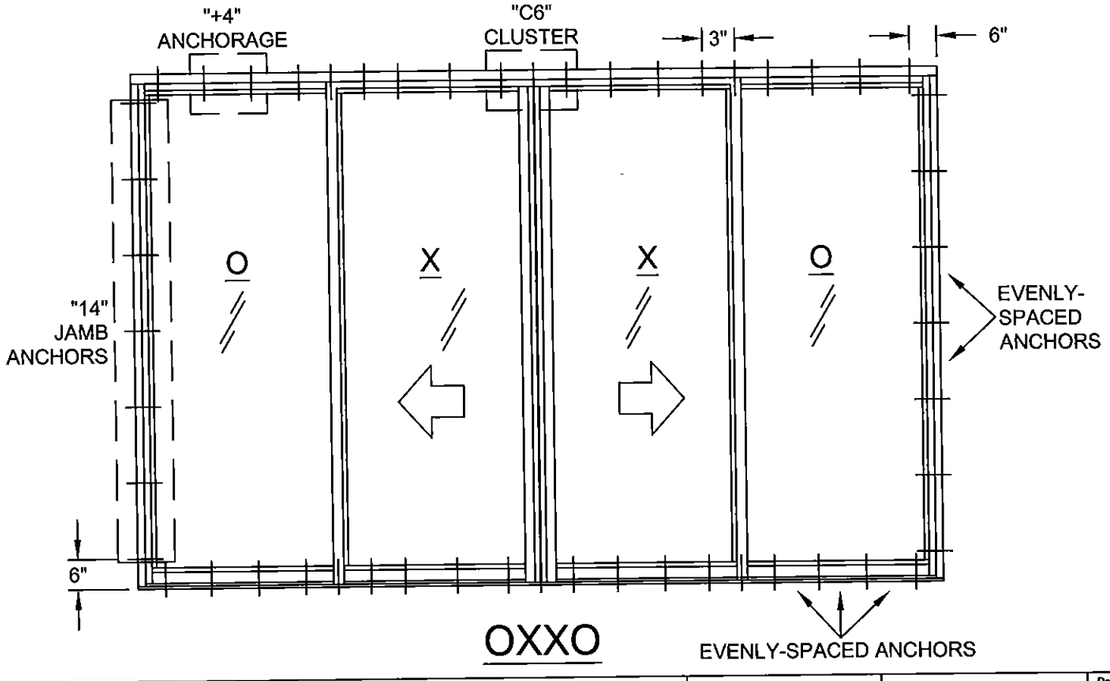

OXXO

NOTES:

1. ANCHOR LOCATIONS SHOWN REPRESENT A STAGGERED PAIR OF ANCHORS AS SHOWN ON SHEETS 13 & 14.

2. FOR ANCHOR QUANTITIES REQUIRED PER SIZE, DP AND ANCHORAGE, SEE TABLES ON SHEETS 16 - 18.

3. FOR IN-DEPTH EXAMPLE, SEE SHEET 15.

PRODUCT REVISED
as complying with the Florida
Building Code
Acceptance No 15-0612.06
Expiration Date Feb. 14, 2018
By Manuel Feroz
Miami Dade Product Control

ANTHONY LYNN MILLER
LICENSE
No. 58705
6/8/15
STATE OF
FLORIDA
PROFESSIONAL ENGINEER

A. LYNN MILLER, P.E.
P.E.# 58705

Revsd By:	Date:	Revisions:	
J.R.	06/02/15	D	UPDATE TO 2014 FBC, (5TH EDITION)
Revsd By:	Date:	Revisions:	
Revsd By:	Date:	Revisions:	
Drawn By: J.R.	Date: 8/01/07	Checked By:	Date:

1070 TECHNOLOGY DRIVE
NOKOMIS, FL 34275

P.O. BOX 1529
NOKOMIS, FL 34274

PGT
Visibly Better

Description: ANCHOR ELEVATIONS

Title: ALUM. SGD SERIES 3030, (LM & SM)

Series/Model:	Scale:	Sheet:	Drawing No.	Rev:
SGD3030	NTS	2 of 18	3030-LM-120	D

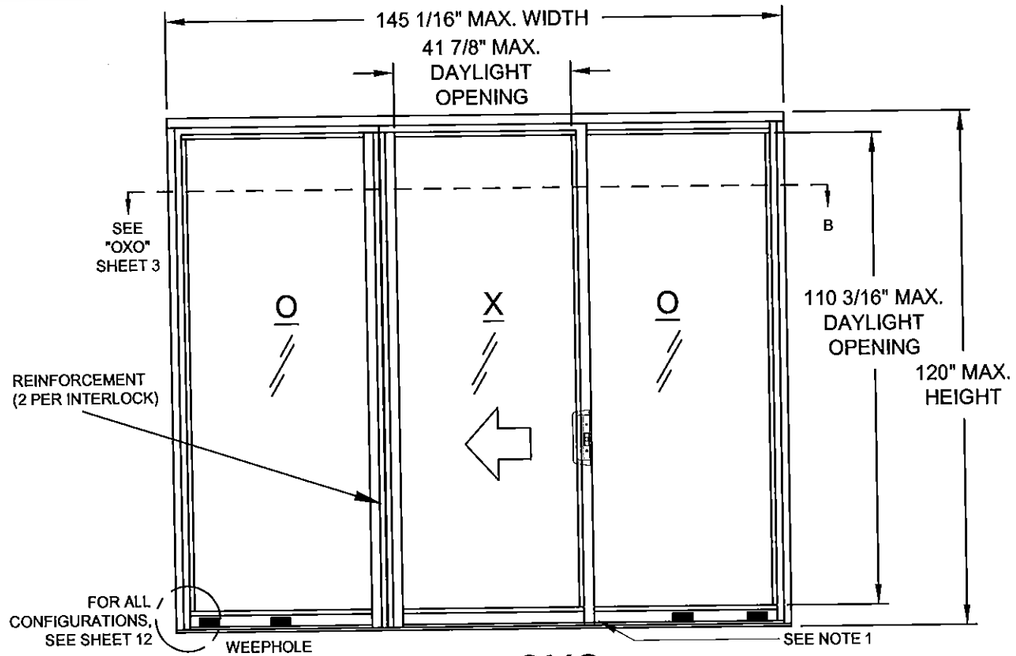

OXO

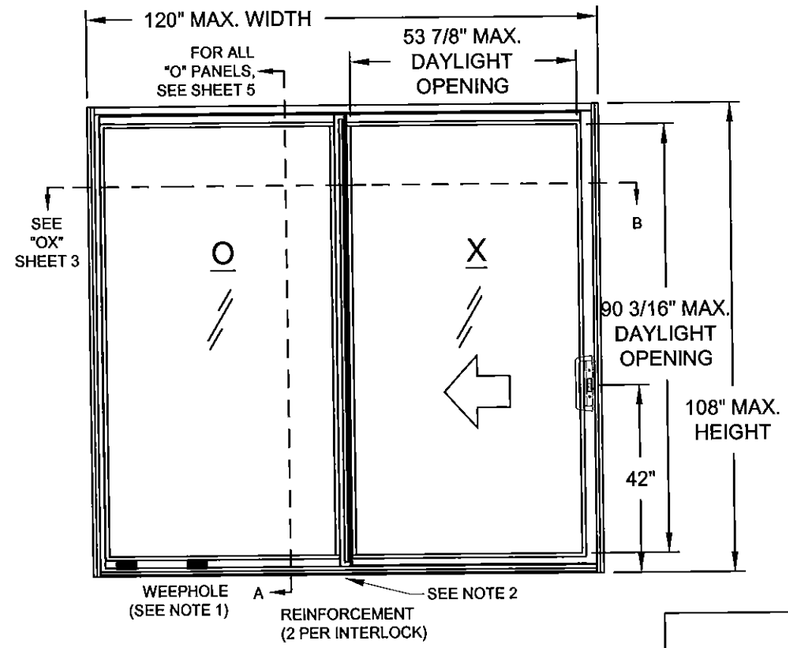

XO OR OX

NOTES:

1. 1-9/16" X 5/16" WEEPHOLES ARE LOCATED 6" FROM EACH END AND AT THE FIXED PANEL CENTER, (SEE SHEET 5).

2. ELEVATIONS ON THIS PAGE ARE FOR A DESIGN PRESSURE OF +/- 120.0 PSF.

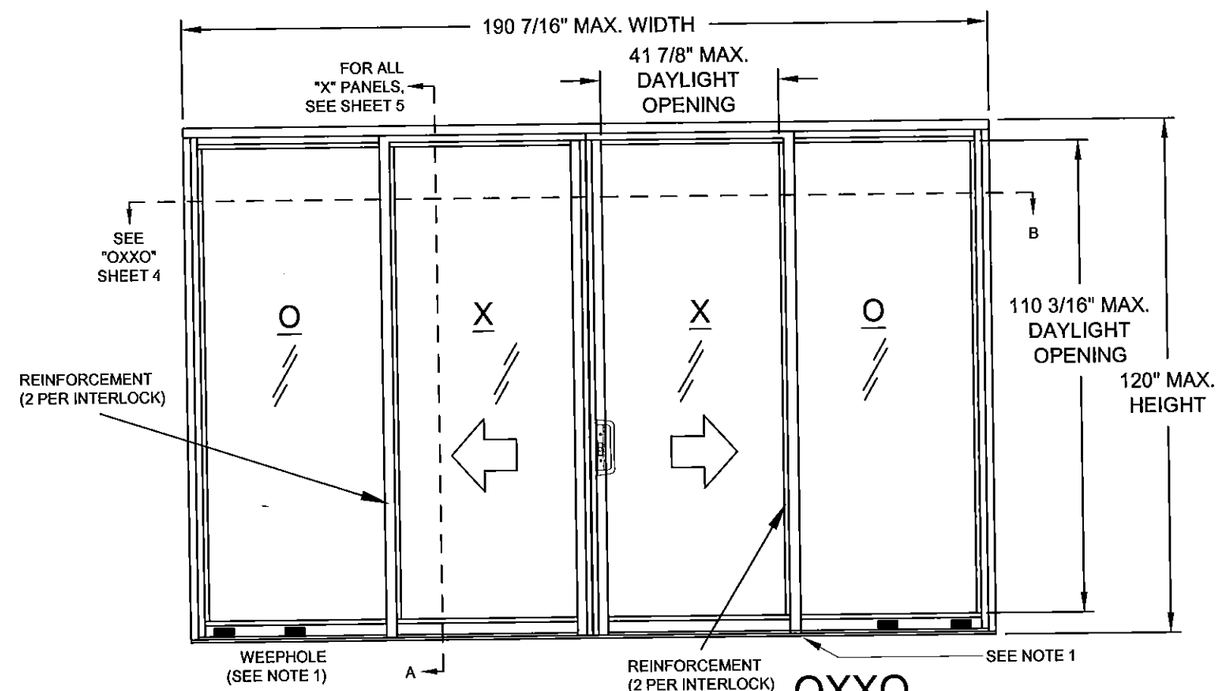

OXXO

PRODUCT REVISED
as complying with the Florida Building Code
Acceptance No 15-0612.06
Expiration Date Feb. 14, 2018
By Manuel Perez
Miami Dade Product Control

ANTHONY LYNN MILLER
LICENSE
No. 58705
6/8/15
STATE OF FLORIDA
PROFESSIONAL ENGINEER

A. LYNN MILLER, P.E.
P.E.# 58705

Revsd By:	Date:	Revisions:	
J.R.	06/02/15	D	UPDATE TO 2014 FBC, (5TH EDITION)
Revsd By:	Date:	Revisions:	
Revsd By:	Date:	Revisions:	
Drawn By: J.R.	Date: 8/01/07	Checked By:	Date:

1070 TECHNOLOGY DRIVE
NOKOMIS, FL 34275

P.O. BOX 1529
NOKOMIS, FL 34274

PGT Visibly Better

Description: ELEVATIONS

Title: ALUM. SGD SERIES 3030, (LM & SM)

Series/Model:	Scale:	Sheet:	Drawing No.	Rev:
SGD3030	NTS	3 of 18	3030-LM-120	D

OXXO

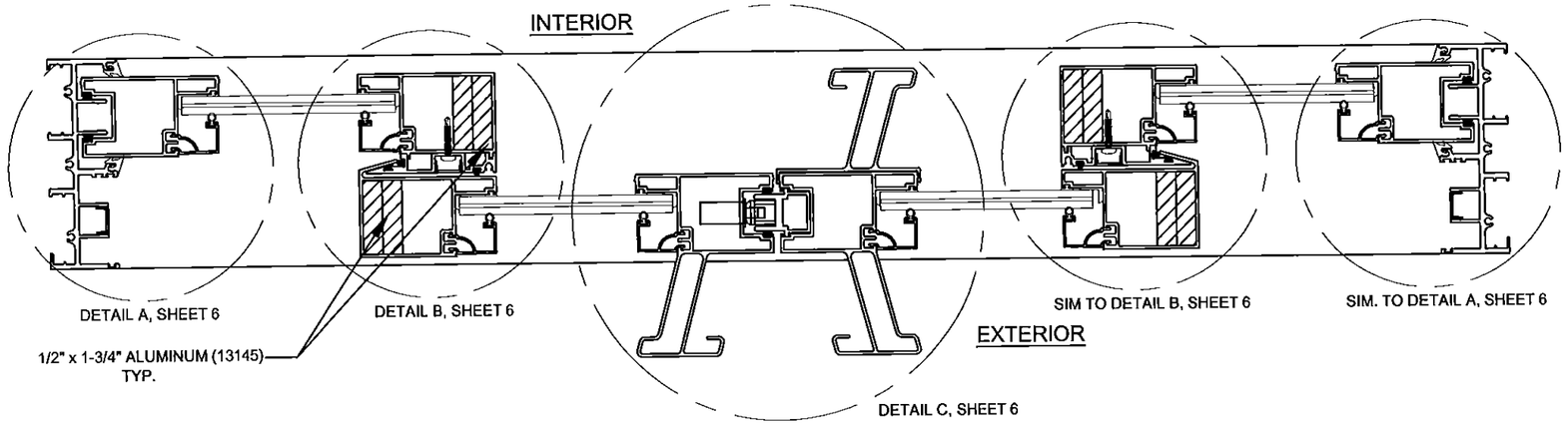

OXO

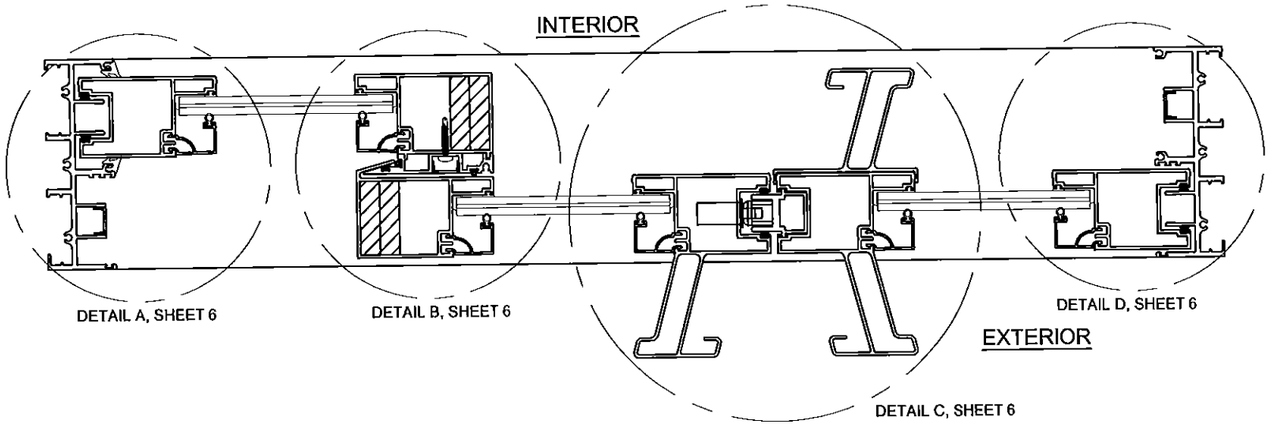

OX (XO SIMILAR)

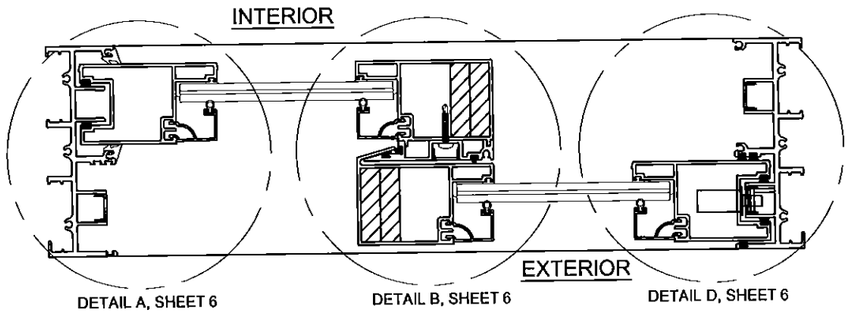

PRODUCT REVISED
as complying with the Florida
Building Code
Acceptance No 15-0612.06
Expiration Date Feb 14, 2018
By Manuel Perez
Miami Dade Product Control

ANTHONY LYNN MILLER
LICENSE
No. 58705
6/8/15
STATE OF FLORIDA
PROFESSIONAL ENGINEER

A. LYNN MILLER, P.E.
P.E.# 58705

Revised By:	Date:	Revisions:	
J.R.	06/02/15	D	UPDATE TO 2014 FBC, (5TH EDITION)
Revised By:	Date:	Revisions:	
Revised By:	Date:	Revisions:	
Drawn By: J.R.	Date: 8/01/07	Checked By:	Date:

1070 TECHNOLOGY DRIVE
NOKOMIS, FL 34275

P.O. BOX 1529
NOKOMIS, FL 34274

PGT
Visibly Better

Description: CONFIGURATIONS

Title: ALUM. SGD SERIES 3030, (LM & SM)

Series/Model:	Scale:	Sheet:	Drawing No.	Rev:
SGD3030	1/4	4 of 18	3030-LM-120	D

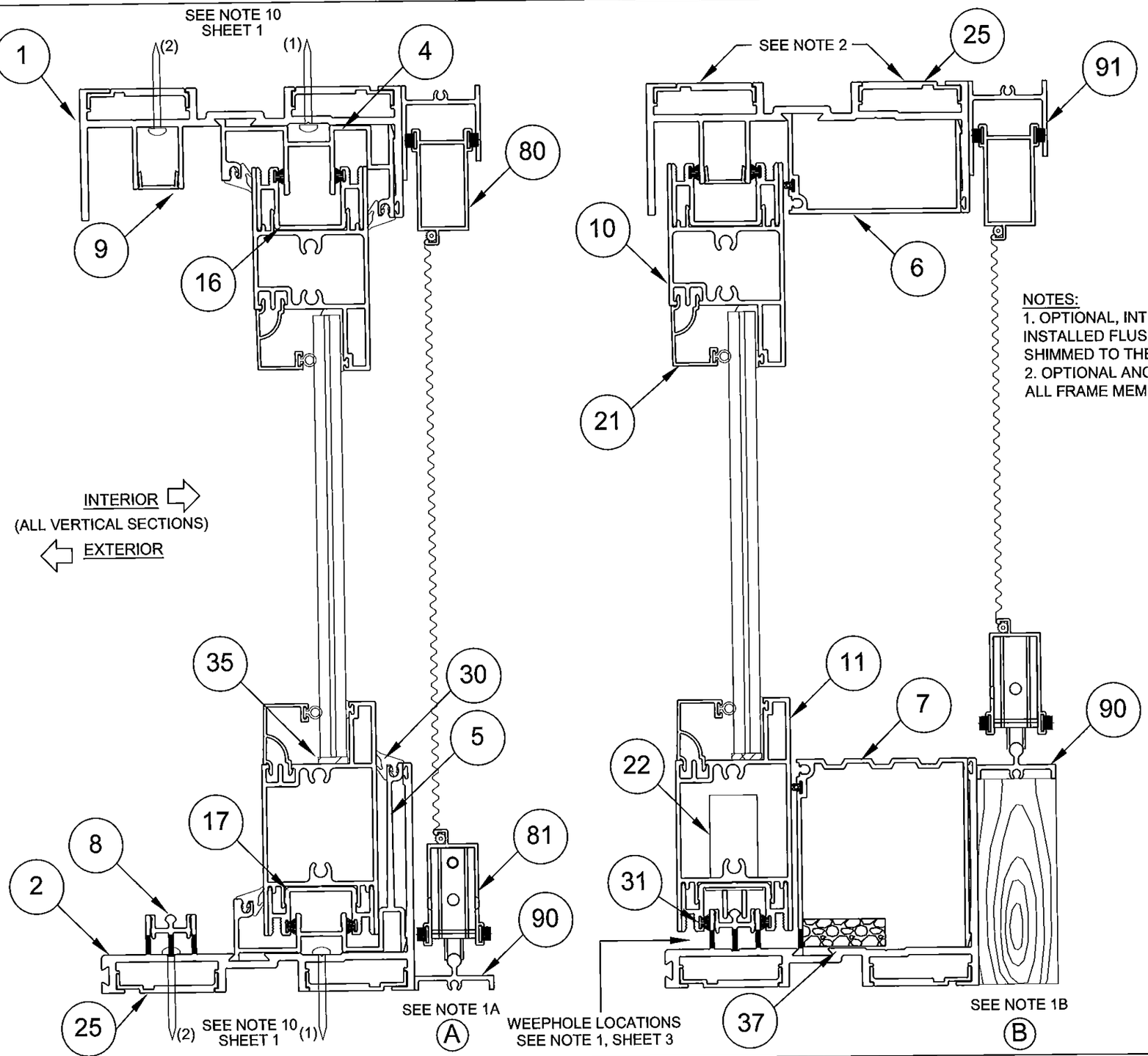

NOTES:
1. OPTIONAL, INTERIOR SCREEN MAY BE INSTALLED FLUSH TO THE TRACK (A), OR SHIMMED TO THE FINISHED FLOOR HEIGHT (B).
2. OPTIONAL ANCHOR PLATE (25) INSTALLED IN ALL FRAME MEMBERS, FOR FULL DESIGN LOADS.

PRODUCT REVISED
as complying with the Florida
Building Code
Acceptance No 15-0612.06
Expiration Date Feb 14, 2018
By Manuel Perez
Miami-Dade Product Control

ANTHONY LYNN MILLER
LICENSE
No. 58705
6/8/15
STATE OF FLORIDA
PROFESSIONAL ENGINEER

A. LYNN MILLER, P.E.
P.E.# 58705

Revsd By:	Date:	Revisions:	
J.R.	06/02/15	D	UPDATE TO 2014 FBC, (5TH EDITION)
Revsd By:	Date:	Revisions:	
Revsd By:	Date:	Revisions:	
Drawn By: J.R.	Date: 8/01/07	Checked By:	Date:

1070 TECHNOLOGY DRIVE
NOKOMIS, FL 34275

P.O. BOX 1529
NOKOMIS, FL 34274

PGT
Visibly Better

Description: VERTICAL CROSS SECTIONS

Title: ALUM. SGD SERIES 3030, (LM & SM)

Series/Model:	Scale:	Sheet:	Drawing No.	Rev:
SGD3030	1/2	5 of 18	3030-LM-120	D

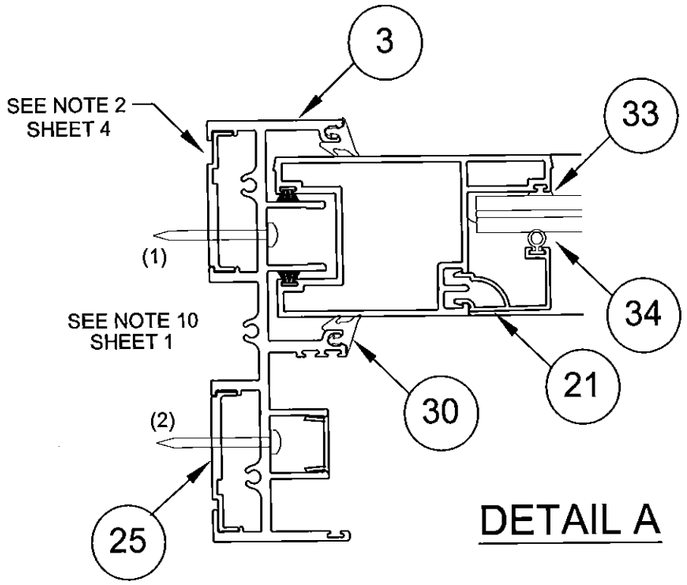

DETAIL A

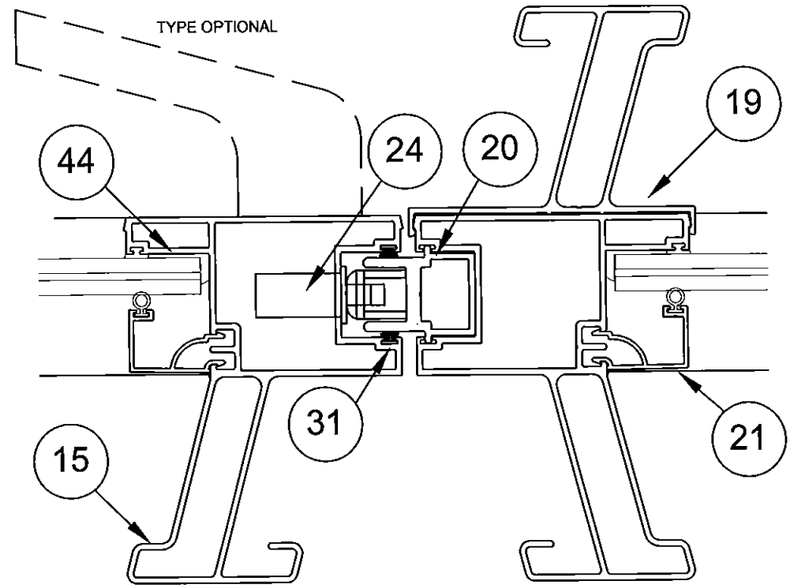

DETAIL C

INTERIOR
(ALL HORIZ. SECTIONS)
EXTERIOR

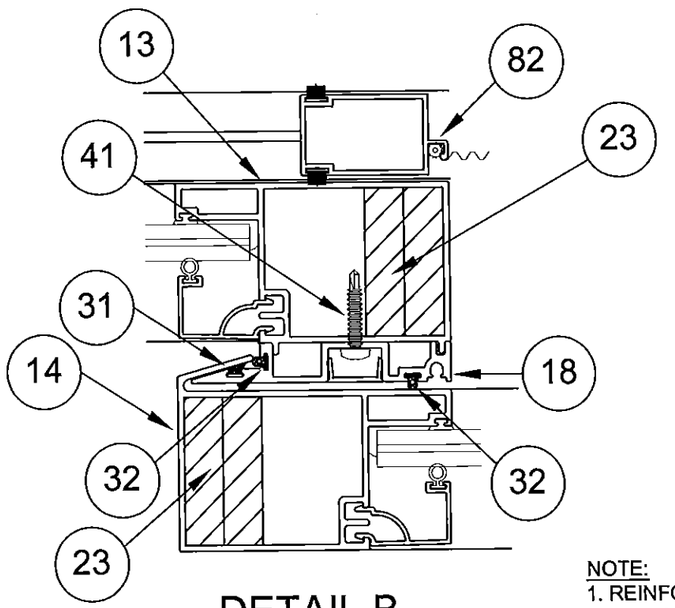

TYPE AND
QUANTITY OPTIONAL

DETAIL B

NOTE:
1. REINFORCEMENTS (ITEM 23), MUST BE USED IN THE QUANTITIES SHOWN, REGARDLESS OF REQUIRED SIZE OR DESIGN PRESSURE.

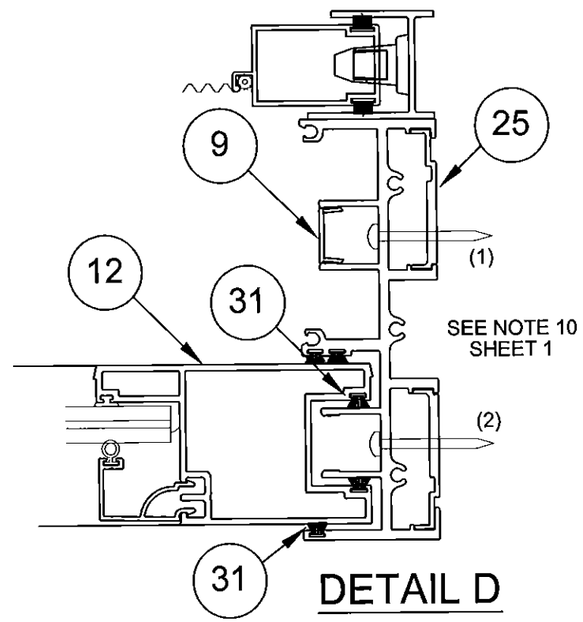

DETAIL D

PRODUCT REVISED
as complying with the Florida
Building Code
Acceptance No 15-0612.06
Expiration Date Feb. 14, 2018
By Manuel Perez
Miami-Dade Product Control

ANTHONY LYNN MILLER
LICENSE
No. 58705
6/8/15
STATE OF
FLORIDA
PROFESSIONAL ENGINEER

A. LYNN MILLER, P.E.
P.E.# 58705

Revsd By:	Date:	Revisions:	
J.R.	06/02/15	D	UPDATE TO 2014 FBC, (5TH EDITION)
Revsd By:	Date:	Revisions:	
Revsd By:	Date:	Revisions:	
Drawn By: J.R.	Date: 8/01/07	Checked By:	Date:

1070 TECHNOLOGY DRIVE
NOKOMIS, FL 34275

P.O. BOX 1529
NOKOMIS, FL 34274

PGT
Visibly Better

Description: HORIZONTAL CROSS SECTIONS

Title: ALUM. SGD SERIES 3030, (LM & SM)

Series/Model:	Scale:	Sheet:	Drawing No.	Rev:
SGD3030	1/2	6 of 18	3030-LM-120	D

#	Dwg #	Description
1	13120	Main Frame Head
2	13121	Main Frame Sill
3	13122	Main Frame Jamb
4	13135	Fixed Panel Adapter Head
5	13136	Fixed Panel Adapter Sill
6	13133	Operable Panel Adapter Head
7	13134	Threshold
8	13132	Track
9	13139	Screw Cover
10	13123	Panel Top Rail
11	13124	Panel Bottom Rail
12	13125	Panel Side Rail
13	13126	Fixed Panel Interlock
14	13127	Operable Panel Interlock
15	13128	Astragal
16	13137	Top Rail Panel Adapter
17	13138	Bottom Rail Panel Adapter
18	13129	Interlock Add On
19	13131	Add On Handle
20	13130	Male Astragal
21	13025	9/16" Bead
22	8153	Roller Assembly
23	13145	Aluminum Reinforcement - 6063 T5
24	4439	Gemini Lock
25	13150	SGD Anchor Plate
26	4437	Thumbturn
28	749	Reinforcement Spring Clip
29	13143	Handle Set
30	13144	Fixed Panel Gasket
31	61059	Weatherstrip .187 X .210 FS
32	1213	Weatherstrip .187 X .200 QLON
33	13115	Glazing Leg Gasket
34	6TP247	Bead Weatherstrip
35	1267	Setting Block
36	71695K	Panel Dust Plugs

#	Dwg #	Description
37	7PAD1626	Open Cell Foam Pad
38	71420X	1/4-20 x 1.25" Socket Head, SS
39	13021	#10 X 1.25" Ph, PH, SS
40	7103239	Tinnerman Nut, #10-32
41	710X34	#10 x 3/4" Ph, PH, SS SD
42	71032X	#10-32 x 1" Ph, FH, Self-Tap
43	13044	Panel Corner Key
44		Silicone Glazing GE7700 or Equiv.
45		Joint Sealant
46	1135	#10 x 3/4" Ph, PH, SS
47	8052	Cap Plug
48	4385	Bumper Stop
49	78X38	# 8 x 3/8" Tek

#	Dwg #	Description (Screen)
59	1135	#10-32 X .875 PH Fl. MS
60	653	Jamb Keeper
62	1235	Weatherstrip .170 X .270 FS
63	668	Single Roller, SS
64	4341	X-Cam Latch
65	1692	Screen Spline
66		Screen Cloth, 18 X 16 Mesh
80	4317	Screen Frame Top Rail
81	4318	Screen Frame Bottom Rail
82	4319	Screen Frame Side Rail
85	4320	Screen Frame Interlock
86	4384	Screen Astragal Adapter
90	4424	Screen, 1-Track Frame, Sill
91	4425	Screen, 1-Track Frame, Head
92	4426	Screen, 1-Track Frame, Jamb

PRODUCT REVISED
as complying with the Florida
Building Code
Acceptance No 15-0912.06
Expiration Date Feb. 14, 2018
By Manuel Perez
Miami Dade Product Control

ANTHONY LYNN MILLER
LICENSE
No. 58705
6/8/15
STATE OF
FLORIDA
PROFESSIONAL ENGINEER

A. LYNN MILLER, P.E.
P.E.# 58705

Revsd By:	Date:	Revisions:	
J.R.	06/02/15	D	UPDATE TO 2014 FBC, (5TH EDITION)
Revsd By:	Date:	Revisions:	
Revsd By:	Date:	Revisions:	
Drawn By: J.R.	Date: 8/01/07	Checked By:	Date:

1070 TECHNOLOGY DRIVE
NOKOMIS, FL 34275

P.O. BOX 1529
NOKOMIS, FL 34274

PGT
Visibly Better

Description: PARTS LIST

Title: ALUM. SGD SERIES 3030, (LM & SM)

Series/Model:	Scale:	Sheet:	Drawing No.	Rev:
SGD3030	NTS	7 of 18	3030-LM-120	D

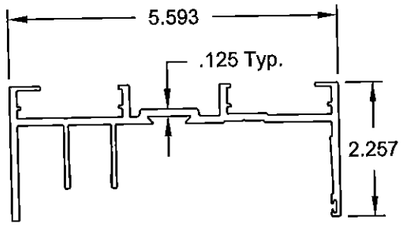

1 Main Frame Head
13120 (49060)

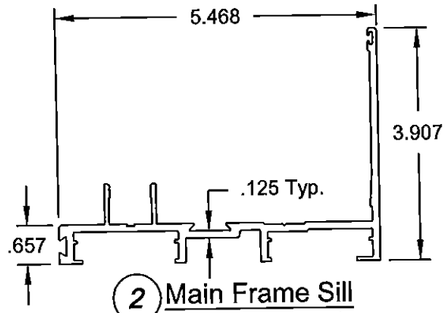

2 Main Frame Sill
13121 (49061)

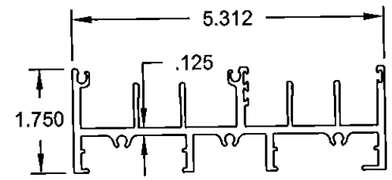

3 Main Frame Jamb
13122 (49062)

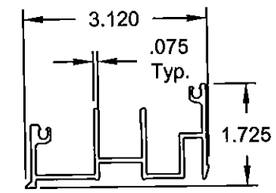

4 Fixed Panel Adapter Head
13135 (49075)

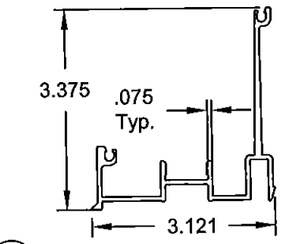

5 Fixed Panel Adapter Sill
13136 (49076)

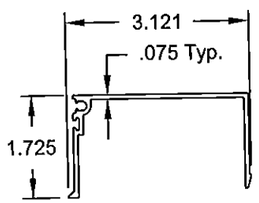

6 Operable Panel Adapter Head
13133 (49073)

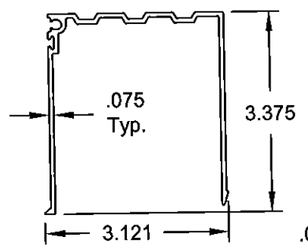

7 Threshold
13134 (49074)

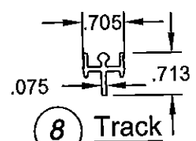

8 Track
13132
(49072)

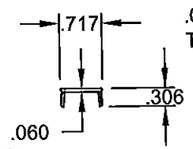

9 Screw Cover
13139
(49079)

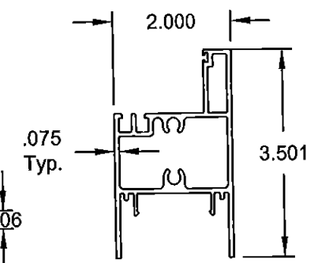

10 Panel Top Rail
13123 (49063)

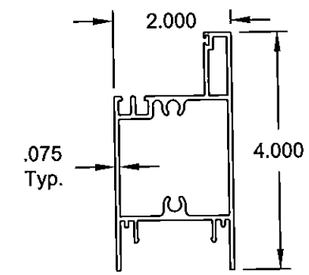

11 Panel Bottom Rail
13124 (49064)

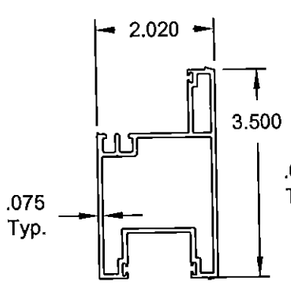

12 Panel Side Rail
13125 (49065)

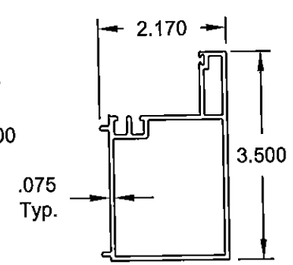

13 Fixed Panel Interlock
13126 (49066)

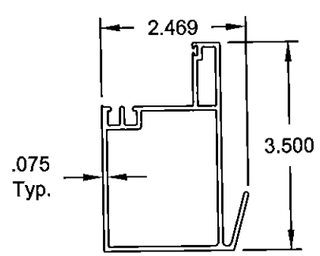

14 Operable Panel Interlock
13127 (49067)

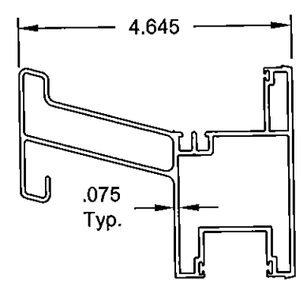

15 Astragal
13128 (49068)

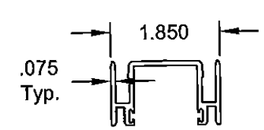

16 Top Rail Panel Adapter
13137 (49077)

PRODUCT REVISED
as complying with the Florida
Building Code
Acceptance No 15-0612.06
Expiration Date Feb. 14, 2018
By Manuel Diaz
Miami Dade Product Control

ANTHONY LYNN MILLER
LICENSE
No. 58705
6/8/15
STATE OF FLORIDA
PROFESSIONAL ENGINEER
A. LYNN MILLER, P.E.
P.E.# 58705

Revsd By:	Date:	Revisions:	
J.R.	06/02/15	D	UPDATE TO 2014 FBC, (5TH EDITION)
Revsd By:	Date:	Revisions:	
Revsd By:	Date:	Revisions:	
Drawn By: J.R.	Date: 8/01/07	Checked By:	Date:

1070 TECHNOLOGY DRIVE
NOKOMIS, FL 34275

P.O. BOX 1529
NOKOMIS, FL 34274

PGT
Visibly Better

Description: EXTRUSIONS

Title: ALUM. SGD SERIES 3030, (LM & SM)

Series/Model:	Scale:	Sheet:	Drawing No.	Rev:
SGD3030	.75	8 of 18	3030-LM-120	D

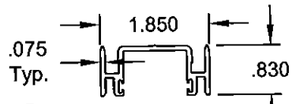

(17) Bottom Rail Panel Adapter
13138 (49078)

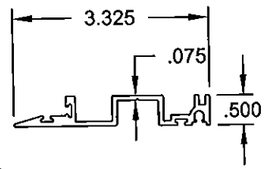

(18) Interlock Add On
13129 (49069)

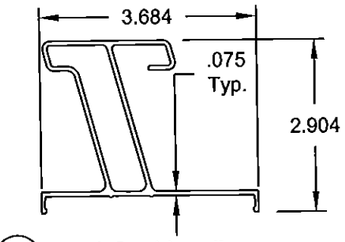

(19) Add On Handle
13131 (49071)

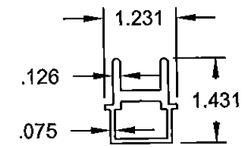

(20) Male Astragal
13130 (49070)

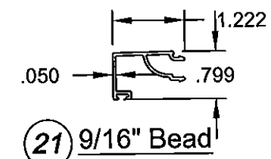

(21) 9/16" Bead
13025

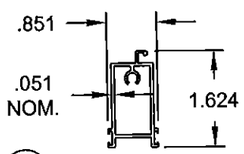

(80) Screen Frame Top Rail
4317

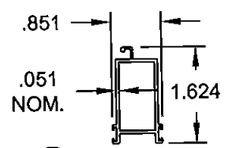

(81) Bottom Rail
4318

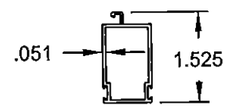

(82) Screen Frame Side Rail
4319

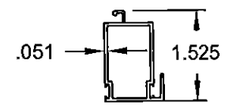

(85) Screen Frame Meeting Rail
4320

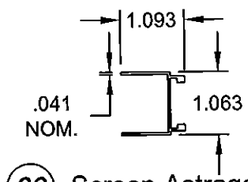

(86) Screen Astragal Adapter
4384

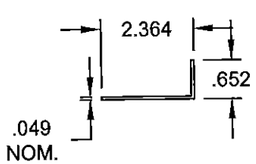

(76) Fixed Panel Clip
4356

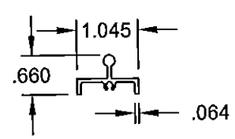

(90) Screen, 1 Track Frame, Sill
4424

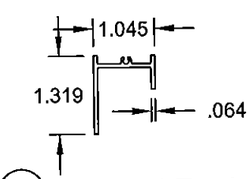

(91) Screen, 1 Track Frame, Head
4425

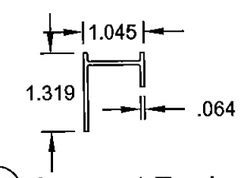

(92) Screen, 1 Track Frame, Jamb
4426

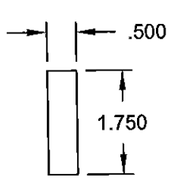

(23) Reinforcement Aluminum (13145)

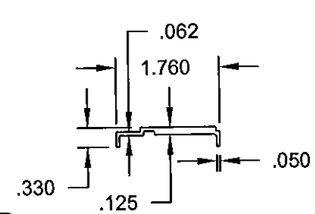

(25) SGD Anchor Plate
13150

PRODUCT REVISED
as complying with the Florida
Building Code
Acceptance No 15-0612.06
Expiration Date Feb. 14, 2018
By Manuel Perez
Miami-Dade Product Control

ANTHONY LYNN MILLER
LICENSE
No. 58705
6/8/15
STATE OF FLORIDA
PROFESSIONAL ENGINEER

A. LYNN MILLER, P.E.
P.E.# 58705

Revsd By:	Date:	Revisions:	
J.R.	06/02/15	D	UPDATE TO 2014 FBC, (5TH EDITION)
Revsd By:	Date:	Revisions:	
Revsd By:	Date:	Revisions:	
Drawn By: J.R.	Date: 8/01/07	Checked By:	Date:

1070 TECHNOLOGY DRIVE
NOKOMIS, FL 34275

P.O. BOX 1529
NOKOMIS, FL 34274

PGT
Visibly Better

Description: EXTRUSIONS (CONT.)

Title: ALUM. SGD SERIES 3030, (LM & SM)

Series/Model:	Scale:	Sheet:	Drawing No.	Rev:
SGD3030	.75	9 of 18	3030-LM-120	D

FACTORY-INSTALLED HARDWARE

(34) Bead Wstp.
6TP247

(31) Wstp .187 x .210 FS
61059

(32) Wstp .187 x .200 QLON
6Q200K (1213)

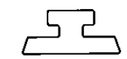

(33) Glazing Leg Gasket
13115

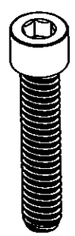

(38) Panel Assembly Screw
1/4-20 x 1.25" Socket Head,
SS71420X114SHCFX

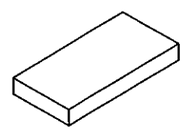

(35) Setting Block
71267N (1267)

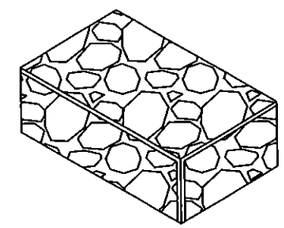

(37) Open Cell Foam Pad
7PAD1626

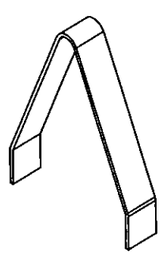

(28) Reinforcement
Spring Clip
749 (7BRKTM25)

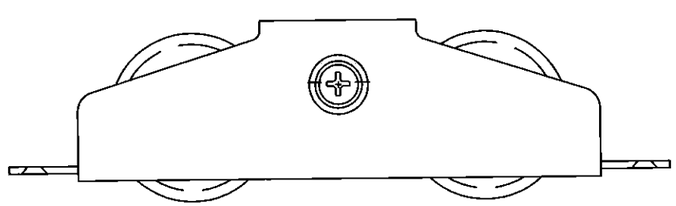

(22) Roller Assembly
Side Mount Shown
8153 (78153N)

PRODUCT REVISED
as complying with the Florida
Building Code
Acceptance No 15-0612.06
Expiration Date Feb. 14, 2018
By Manuel Perez
Miami-Dade Product Control

ANTHONY LYNN MILLER
LICENSE
No. 58705
6/8/15
STATE OF FLORIDA
PROFESSIONAL ENGINEER
A. LYNN MILLER, P.E.
P.E.# 58705

Revsd By:	Date:	Revisions:	
J.R.	06/02/15	D	UPDATE TO 2014 FBC, (5TH EDITION)
Revsd By:	Date:	Revisions:	
Revsd By:	Date:	Revisions:	
Drawn By: J.R.	Date: 8/01/07	Checked By:	Date:

1070 TECHNOLOGY DRIVE
NOKOMIS, FL 34275

P.O. BOX 1529
NOKOMIS, FL 34274

PGT
Visibly Better

Description: PARTS DETAIL

Title: ALUM. SGD SERIES 3030, (LM & SM)

Series/Model:	Scale:	Sheet:	Drawing No.	Rev:
SGD3030	1/4x	10 of 18	3030-LM-120	D

FIELD-INSTALLED HARDWARE

(30) Fixed Panel Gasket
GG38500 (13144)

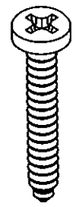

(39) Frame Assembly Screw
#10 X 1.25" Ph, PH, SS
13021

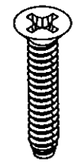

(42) Mortise Latch/Roller Screw
#10-32 x 1" Ph, FH,
Self-Tap 71032X1FPFX

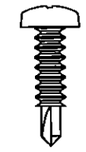

(41) Interlock Screw
#10 x 3/4" Ph, PH, SS
SD 710X34PPSDAX

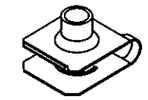

(40) Tinnerman Nut
7103239

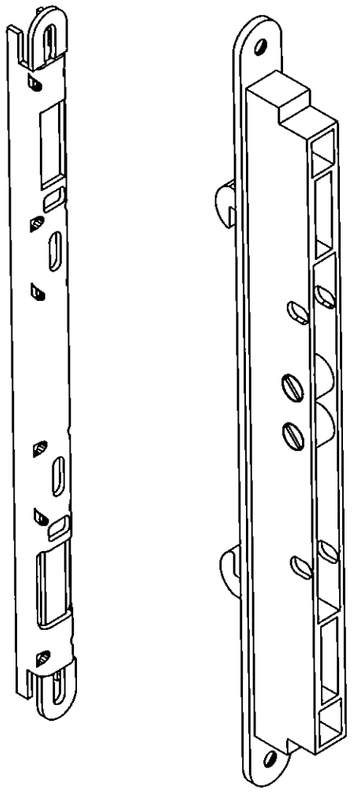

(25) 1/2" SS Keeper
4438

(24) Gemini Lock
78185X (4439)

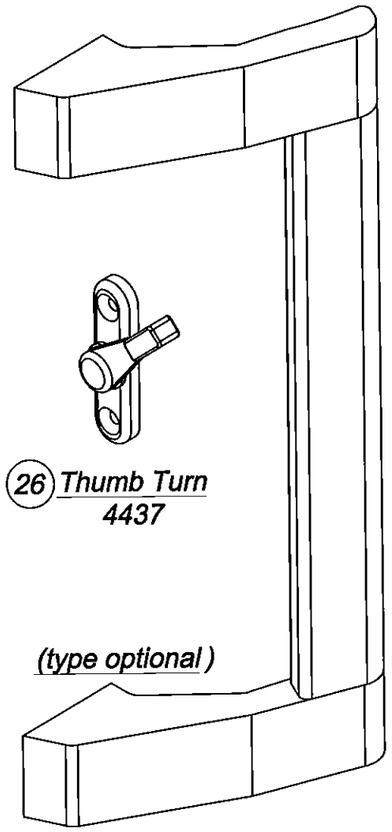

(26) Thumb Turn
4437

(type optional)

(29) Handle Set (13143)
DL915A (Bronze)
DL915DU (Satin)

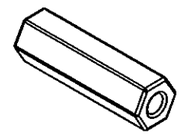

(45) Double Handle Nut
1137816 (13140)

(46) Keeper Screw
#10 x 3/4" Ph, PH, SS
710X115PPX

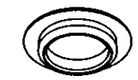

(47) Cap Plug
48052 (8052)

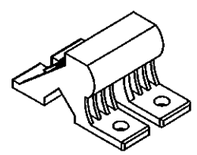

(48) 4 Hole Bumper Stop
4385 (71164W, K, S)

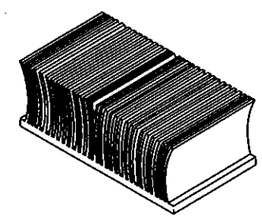

(36) 1.5 X 1.0 X .75
Dust Plug
71695K

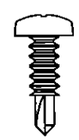

(49) Bumper StopScrew
8 x 3/8" Tek
78X38PPTX

PRODUCT REVISED
as complying with the Florida
Building Code
Acceptance No 15-0612.06
Expiration Date Feb. 14, 2018
By Manuel Irsa
Miami-Dade Product Control

ANTHONY LYNN MILLER
LICENSE
No. 58705
6/8/15
STATE OF
FLORIDA
PROFESSIONAL ENGINEER

A. LYNN MILLER, P.E.
P.E.# 58705

Revsd By:	Date:	Revisions:	
J.R.	06/02/15	D	UPDATE TO 2014 FBC, (5TH EDITION)
Revsd By:	Date:	Revisions:	
Revsd By:	Date:	Revisions:	
Drawn By: J.R.	Date: 8/01/07	Checked By:	Date:

1070 TECHNOLOGY DRIVE
NOKOMIS, FL 34275

P.O. BOX 1529
NOKOMIS, FL 34274

PGT
Visibly Better

Description: PARTS DETAIL (CONT.)

Title: ALUM. SGD SERIES 3030, (LM & SM)

Series/Model:	Scale:	Sheet:	Drawing No.	Rev:
SGD3030	NTS	11 of 18	3030-LM-120	D

PANEL TYPES

PANEL LETTER	INTERIOR (ALL PANEL TYPES) EXTERIOR		
XL	JAMB STILE		EXTERIOR INTERLOCK
OR	INTERIOR INTERLOCK		JAMB STILE
XAR	EXTERIOR INTERLOCK		ASTRAGAL
OL	JAMB STILE		INTERIOR INTERLOCK
OAR	ASTRAGAL		JAMB STILE
XAL	ASTRAGAL		EXTERIOR INTERLOCK
XR	EXTERIOR INTERLOCK		JAMB STILE
OAL	JAMB STILE		ASTRAGAL

MAIN FRAME

(TYP. HEAD & SILL)

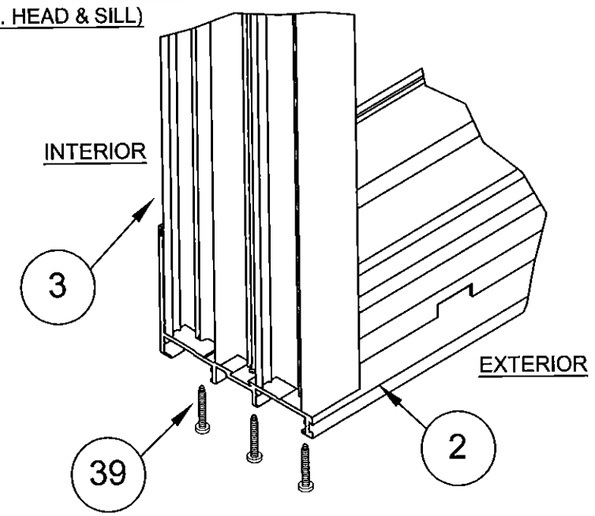

PANEL

(TYP. HEAD & SILL)

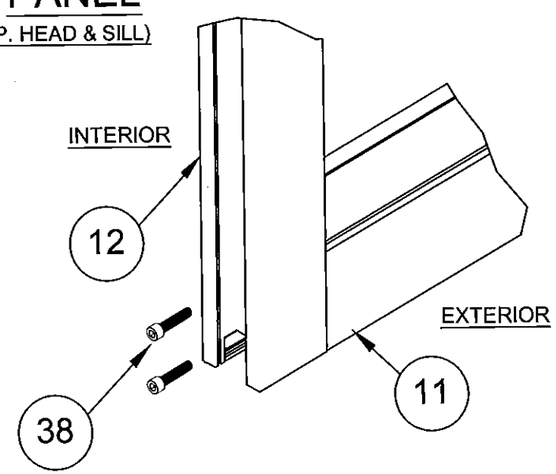

PRODUCT REVISED
as complying with the Florida
Building Code
Acceptance No 15-0612.06
Expiration Date Feb. 14, 2018
By Manuel Perez
Miami-Dade Product Control

ANTHONY LYNN MILLER
LICENSE
No. 58705
6/8/15
STATE OF
FLORIDA
PROFESSIONAL ENGINEER

A. LYNN MILLER, P.E.
P.E.# 58705

Revsd By:	Date:	Revisions:	
J.R.	06/02/15	D	UPDATE TO 2014 FBC, (5TH EDITION)
Revsd By:	Date:	Revisions:	
Revsd By:	Date:	Revisions:	
Drawn By: J.R.	Date: 5/1/07	Checked By:	Date:

1070 TECHNOLOGY DRIVE
NOKOMIS, FL 34275

P.O. BOX 1529
NOKOMIS, FL 34274

PGT
Visibly Better

Description: PANEL TYPES & CORNER ASSEMBLY

Title: ALUM. SGD SERIES 3030, (LM & SM)

Series/Model:	Scale:	Sheet:	Drawing No.	Rev:
SGD3030	NTS	12 of 18	3030-LM-120	D

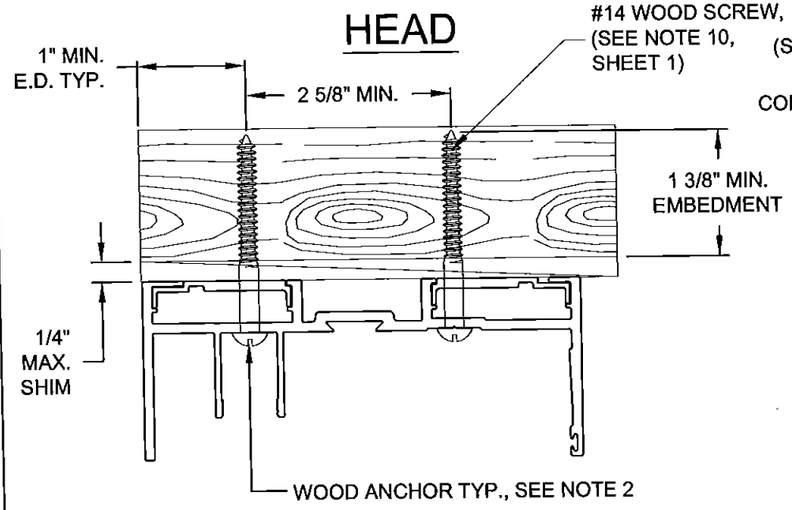

DETAIL A

2X WOOD BUCK OR DIRECTLY INTO WOOD FRAMING, SEE NOTE 1

INTERIOR
(ALL VERTICAL SECTIONS)
EXTERIOR

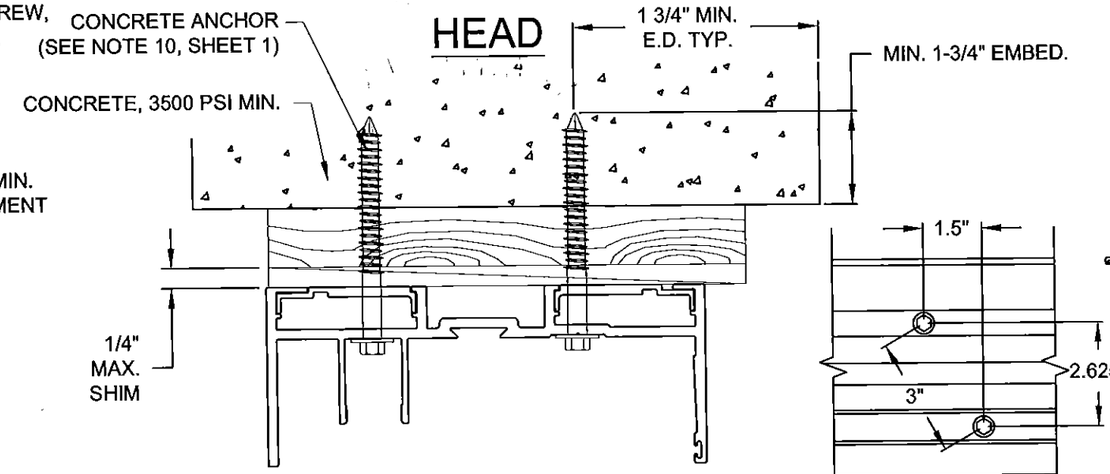

DETAIL A

CONCRETE OR CONCRETE BLOCK SUBSTRATE WITH OPTIONAL 1X WOOD BUCK, SEE NOTE 1

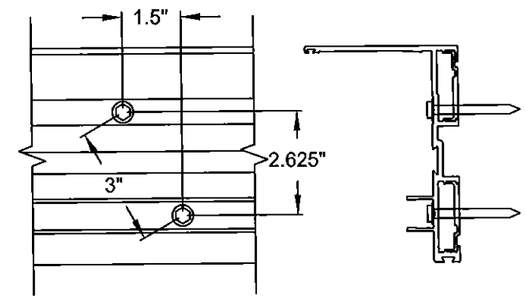

FRAME SILL IN PLAN VIEW, 1/2X
(HEAD SIMILAR)

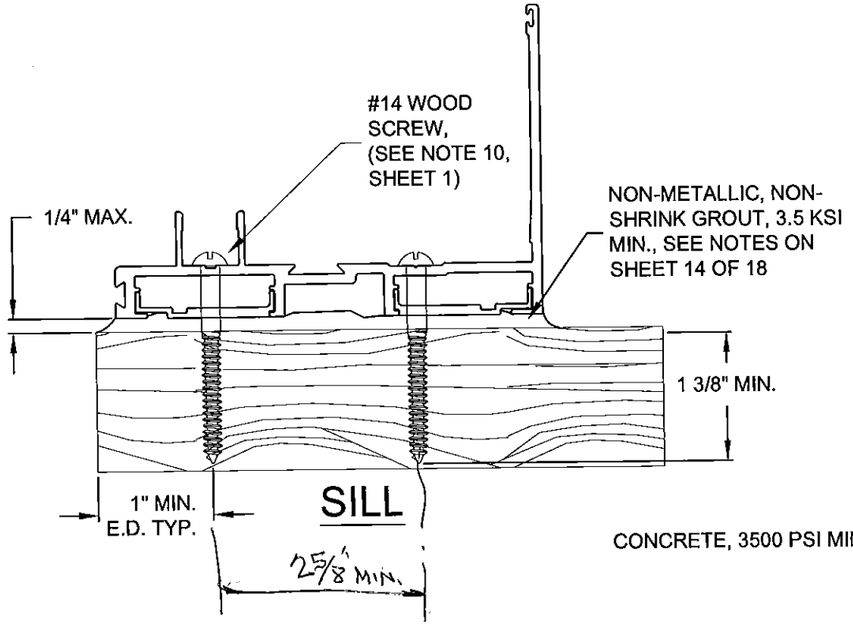

SILL

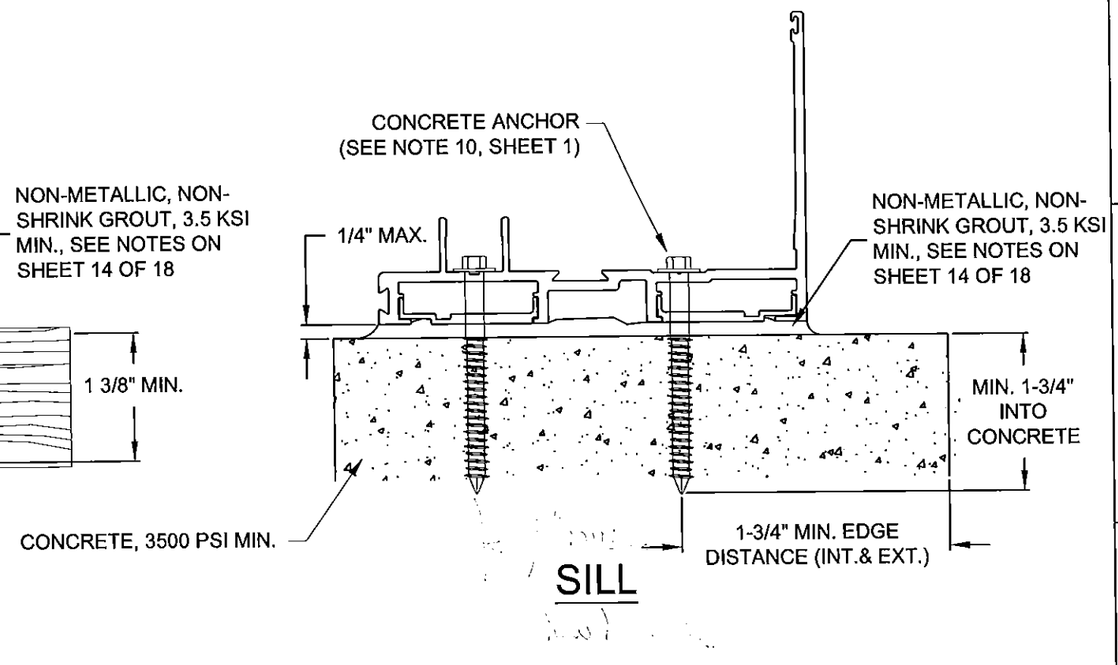

SILL

PRODUCT REVISED
as complying with the Florida
Building Code
Acceptance No 15-0612.06
Expiration Date Feb. 14, 2018
By Manuel Sera
Miami-Dade Product Control

ANTHONY LYNN MILLER
LICENSE
No. 58705
6/8/15
STATE OF FLORIDA
PROFESSIONAL ENGINEER

A. LYNN MILLER, P.E.
P.E.# 58705

Revsd By:	Date:	Revisions:	
J.R.	06/02/15	D	UPDATE TO 2014 FBC, (5TH EDITION)
Revsd By:	Date:	Revisions:	
Revsd By:	Date:	Revisions:	
Drawn By: J.R.	Date: 5/1/07	Checked By:	Date:

1070 TECHNOLOGY DRIVE
NOKOMIS, FL 34275

P.O. BOX 1529
NOKOMIS, FL 34274

PGT
Visibly Better

Description: ANCHORAGE DETAILS

Title: ALUM. SGD SERIES 3030, (LM & SM)

Series/Model:	Scale:	Sheet:	Drawing No.	Rev:
SGD3030	.5	13 of 18	3030-LM-120	D

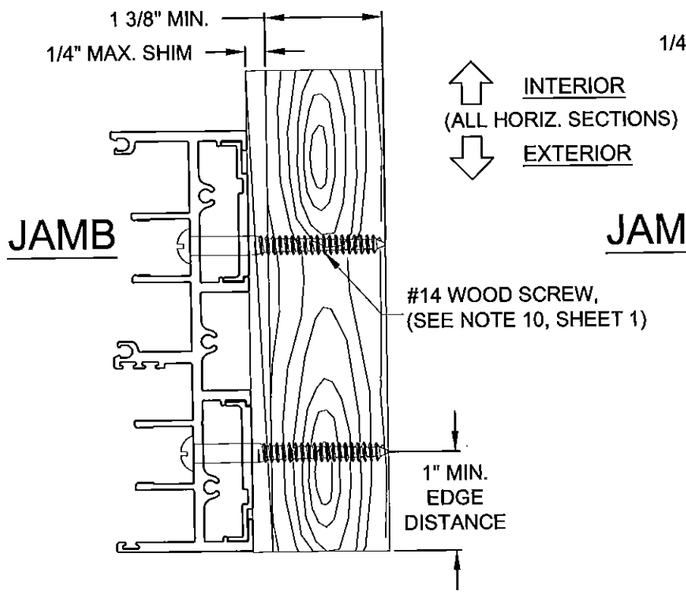

DETAIL B

2X WOOD BUCK OR DIRECTLY INTO WOOD FRAMING, SEE NOTE 1

INTERIOR
(ALL HORIZ. SECTIONS)
EXTERIOR

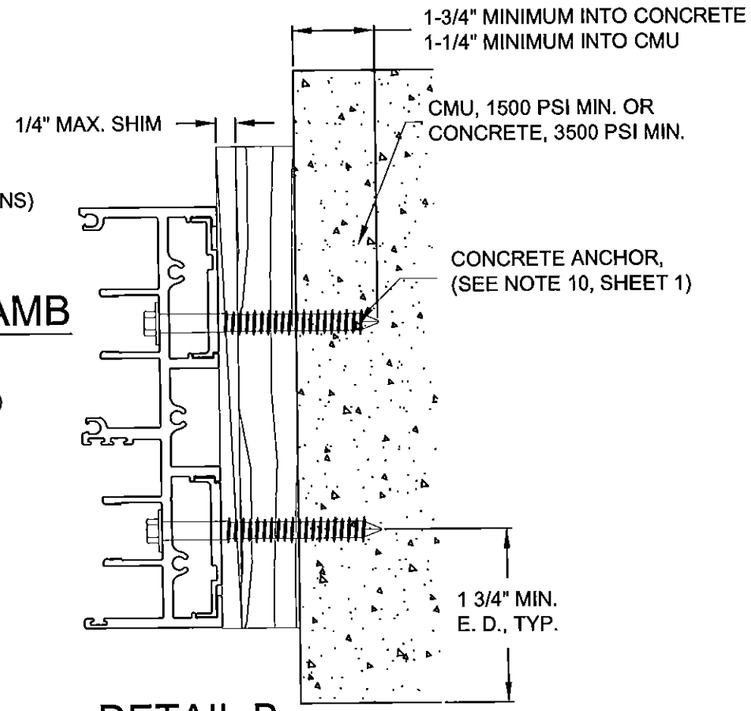

DETAIL B

CONCRETE OR CONCRETE BLOCK SUBSTRATE WITH OPTIONAL 1X WOOD BUCK, SEE NOTE 1

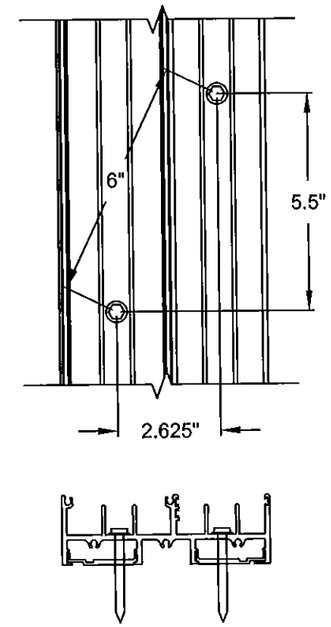

FRAME JAMB IN PLAN VIEW, 1/2X

NOTES:

1. FOR CONCRETE APPLICATIONS IN MIAMI-DADE COUNTY, USE ONLY MIAMI-DADE COUNTY APPROVED ANCHORS. SEE TYPE ON FOLLOWING SHEETS.

2. FOR WOOD APPLICATIONS USE #14 WOOD SCREWS. 1/4" ELCO CRETE-FLEX ANCHORS MAY BE USED INSTEAD OF #14 SCREWS.

3. WOOD BUCKS DEPICTED AS 1X ARE LESS THAN 1 1/2" THICK. 1X WOOD BUCKS ARE OPTIONAL IF UNIT IS INSTALLED DIRECTLY TO SOLID CONCRETE. WOOD BUCKS DEPICTED AS 2X ARE 1 1/2" THICK OR GREATER. INSTALLATION TO THE SUBSTRATE OF WOOD BUCKS TO BE ENGINEERED BY OTHERS OR AS APPROVED BY THE AUTHORITY HAVING JURISDICTION (AHJ).

4. FOR ATTACHMENT TO ALUMINUM: THE MATERIAL SHALL BE A MINIMUM STRENGTH OF 6063-T5 AND A MINIMUM OF 1/8" THICK. THE ALUMINUM STRUCTURAL MEMBER SHALL BE OF A SIZE TO PROVIDE FULL SUPPORT TO THE WINDOW FRAME SIMILAR TO THAT SHOWN IN THESE DETAILS FOR 2X WOOD BUCKS. SHIMS MAY NOT BE USED. THE ANCHOR SHALL BE A #14 SHEET METAL SCREW WITH FULL ENGAGEMENT INTO THE ALUMINUM. IF THESE CRITERIA ARE MET, THE RESPECTIVE DESIGN PRESSURES, ANCHORAGE SPACING AND QUANTITIES FOR A #14 WOOD SCREW MAY BE USED.

5. IF SILL IS TIGHT TO SUBSTRATE, GROUT OR OTHER MATERIAL IS NOT REQUIRED. IF USED, NON-SHRINK, NON-METALLIC GROUT, 3500 PSI MIN., (DONE BY OTHERS) MUST FULLY SUPPORT THE ENTIRE LENGTH OF THE SILL THAT IS NOT TIGHT TO THE SUBSTRATE, AND TRANSFER SHEAR LOAD TO SUBSTRATE. IF SUBSTRATE IS WOOD, 30# FELT PAPER OR MASTIC IS REQUIRED BETWEEN THE GROUT AND WOOD SUBSTRATE, OR AS APPROVED BY THE AUTHORITY HAVING JURISDICTION. GROUT MAXIMUM THICKNESS TO BE .25".

PRODUCT REVISED
as complying with the Florida Building Code
Acceptance No 15-0612.06
Expiration Date Feb. 14, 2018
By Manuel Sera
Miami Dade Product Control

ANTHONY LYNN MILLER
LICENSE
No. 58705
6/8/15
STATE OF FLORIDA
PROFESSIONAL ENGINEER
A. LYNN MILLER, P.E.
P.E.# 58705

Revsd By:	Date:	Revisions:	
J.R.	06/02/15	D	UPDATE TO 2014 FBC, (5TH EDITION)
Revsd By:	Date:	Revisions:	
Revsd By:	Date:	Revisions:	
Drawn By: J.R.	Date: 5/1/07	Checked By:	Date:

1070 TECHNOLOGY DRIVE
NOKOMIS, FL 34275

P.O. BOX 1529
NOKOMIS, FL 34274

PGT
Visibly Better

Description: ANCHORAGE DETAILS (CONT.)

Title: ALUM. SGD SERIES 3030, (LM & SM)

Series/Model:	Scale:	Sheet:	Drawing No.	Rev:
SGD3030	.5	14 of 18	3030-LM-120	D

EXAMPLE 1:

FOR A REQUIRED DESIGN PRESSURE OF 112.3 PSF, DOOR SIZE OF 120" X 108", INSTALLED INTO CONCRETE, AND USING AN ANCHOR PLATE TO MINIMIZE ANCHORAGE QUANTITIES:

1. FOR THE DESIGN PRESSURE OF 112.3 PSF, CHOOSE THE CHART - SHEET 16.

2. FOR A DOOR SIZE OF 120" X 108", CHOOSE THE PANEL SIZE OF 60" X 108".

3.THE DOOR IS TO BE INSTALLED IN CONCRETE WITH THE ANCHOR PLATE, USE THE ANCHOR QUANTITY AS LISTED.

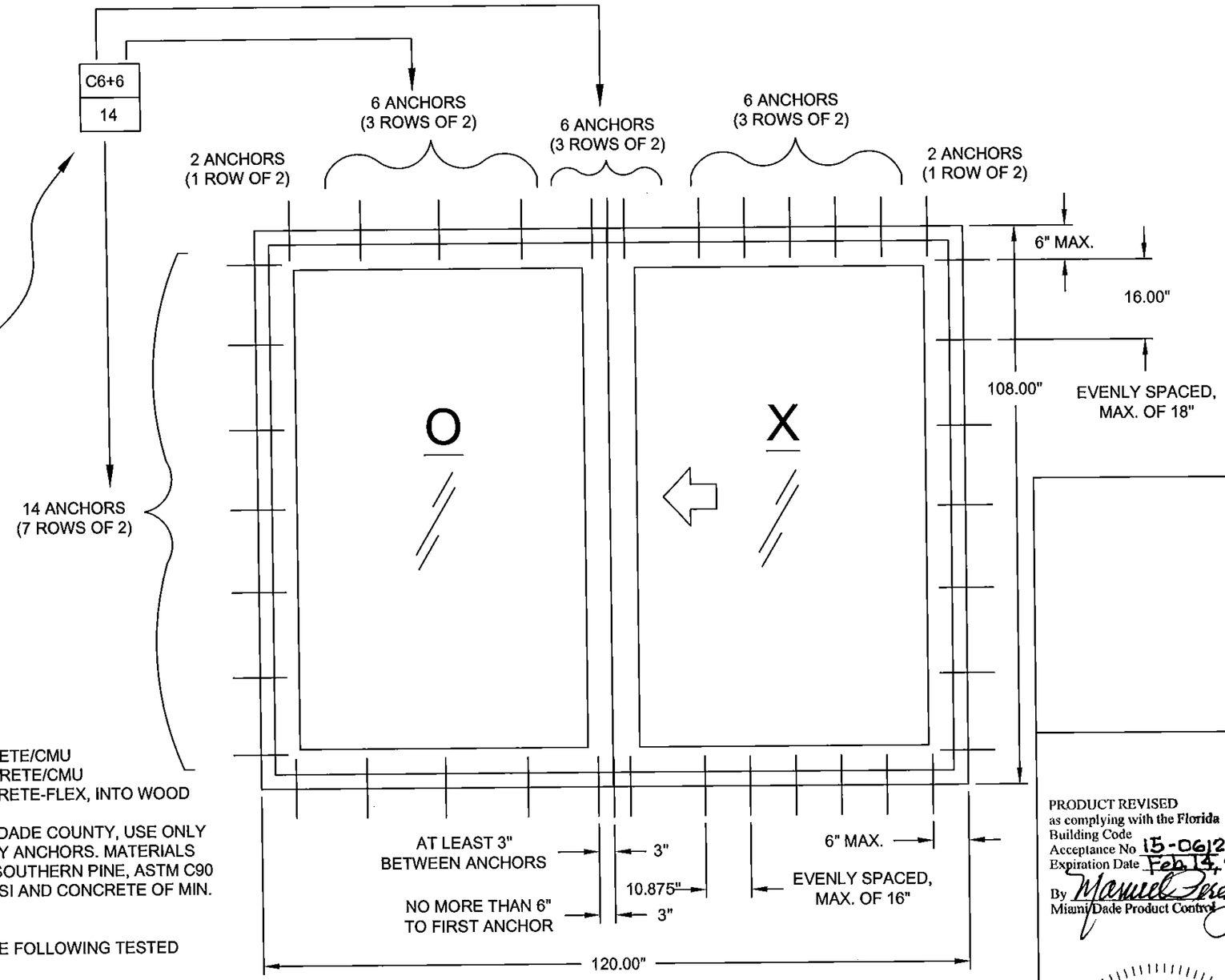

NOTES:
1. ANCHOR TYPES:
   1. 1/4" ELCO ULTRACON INTO CONCRETE/CMU
   2. 1/4" ELCO CRETE-FLEX INTO CONCRETE/CMU
   3. #14 WOOD SCREW OR 1/4" ELCO CRETE-FLEX, INTO WOOD

2. FOR MASONRY APPLICATIONS IN MIAMI-DADE COUNTY, USE ONLY MIAMI-DADE COUNTY APPROVED MASONRY ANCHORS. MATERIALS USED FOR ANCHOR EVALUATIONS WERE SOUTHERN PINE, ASTM C90 CONCRETE MASONRY UNITS OF 1.5 MIN. KSI AND CONCRETE OF MIN. 3.5 KSI.

3. ANCHOR LOCATIONS ARE BASED ON THE FOLLOWING TESTED DIMENSIONS AT FULL DP:
   HEAD/SILL:
   6" MAX. FROM TOP CORNERS
   16" MAX. ANCHOR TO ANCHOR
   6" MAX. TO THE LEFT AND RIGHT OF ASTRAGAL
   JAMBS:
   6" MAX. FROM TOP/BOTTOM CORNERS
   18" MAX. ANCHOR TO ANCHOR

NOTES:
1. HEADER ANCHOR LOCATIONS ALSO APPLY TO SILL, LEFT JAMB LOCATIONS APPLY TO RIGHT JAMB.

PRODUCT REVISED
as complying with the Florida Building Code
Acceptance No 15-0612.06
Expiration Date Feb 14, 2018
By Manuel Perez
Miami-Dade Product Control

ANTHONY LYNN MILLER
LICENSE
No. 58705
6/8/15
STATE OF FLORIDA
PROFESSIONAL ENGINEER

A. LYNN MILLER, P.E.
P.E.# 58705

Revsd By:	Date:	Revisions:	
J.R.	06/02/15	D	UPDATE TO 2014 FBC, (5TH EDITION)
Revsd By:	Date:	Revisions:	
Revsd By:	Date:	Revisions:	
Drawn By: J.R.	Date: 8/01/07	Checked By:	Date:

1070 TECHNOLOGY DRIVE
NOKOMIS, FL 34275

P.O. BOX 1529
NOKOMIS, FL 34274

PGT
Visibly Better

Description: ANCHORAGE (CONT.)

Title: ALUM. SGD SERIES 3030, (LM & SM)

Series/Model:	Scale:	Sheet:	Drawing No.	Rev:
SGD3030	NTS	15 of 18	3030-LM-120	D

Anchor Quantity Required for Design Pressure of: +120.0 -120.0

FOR THE JAMB, THE HEAD & SILL CLUSTER AND THE HEAD & SILL OUTSIDE OF THE CLUSTER

NOM. PANEL WIDTH (IN)	FRAME SIDE	NOM. PANEL HEIGHT (IN) 80			84			96			108			120		
		Anchor Type 1	Anchor Type 2	Anchor Type 3	Anchor Type 1	Anchor Type 2	Anchor Type 3	Anchor Type 1	Anchor Type 2	Anchor Type 3	Anchor Type 1	Anchor Type 2	Anchor Type 3	Anchor Type 1	Anchor Type 2	Anchor Type 3
24	Head & Sill	C2+2	C2+2	C2+2	C2+2	C2+2	C4+2	C4+2	C2+2	C4+2	NOT AVAILABLE IN THESE SIZES					
	Jamb	10	10	10	10	10	10	12	12	12						
30	Head & Sill	C4+4	C2+4	C4+4	C4+4	C4+4	C4+4	C4+4	C4+4	C4+4	C4+4	C4+4	C4+4			
	Jamb	10	10	10	10	10	10	12	12	12	14	14	14			
36	Head & Sill	C4+4	C4+4	C4+4	C4+4	C4+4	C4+4	C4+4	C4+4	C4+4	C4+4	C4+4	C4+4	C6+4	C4+4	C6+4
	Jamb	10	10	10	10	10	10	12	12	12	14	14	14	14	14	14
42	Head & Sill	C4+4	C4+4	C4+4	C4+4	C4+4	C4+4	C4+4	C4+4	C4+4	C6+4	C4+4	C6+4	C6+4	C6+4	C6+4
	Jamb	10	10	10	10	10	10	12	12	12	14	14	14	14	14	14
48	Head & Sill	C4+6	C4+6	C4+6	C4+6	C4+6	C4+6	C4+6	C4+6	C6+6	C6+6	C4+6	C6+6	C6+6	C6+6	C6+6
	Jamb	10	10	10	10	10	10	12	12	12	14	14	14	14	14	14
54	Head & Sill	C4+6	C4+6	C4+6	C4+6	C4+6	C4+6	C6+6	C4+6	C6+6	C6+6	C6+6	C6+6	NOT AVAILABLE IN THESE SIZES		
	Jamb	10	10	10	10	10	10	12	12	12	14	14	14			
60	Head & Sill	C4+6	C4+6	C4+6	C4+6	C4+6	C4+6	C6+6	C4+6	C6+6	C6+6	C6+6	C6+6			
	Jamb	10	10	10	10	10	10	12	12	12	14	14	14			

ANCHOR TYPES:
1. 1/4" ELCO ULTRACON INTO CONCRETE/CMU
2. 1/4" ELCO CRETE-FLEX INTO CONCRETE/CMU
3. #14 WOOD SCREW OR 1/4" ELCO CRETE-FLEX, INTO WOOD

TABLE KEY

TOTAL # OF ANCHORS THROUGH THE HEAD & SILL, TO THE LEFT AND RIGHT OF PANEL MEETING POINT

TOTAL # OF ANCHORS AT THE PANEL CENTER THROUGH THE HEAD & SILL (NOT INC. CORNER ANCHORAGE)

C8+10
18

TOTAL # OF ANCHORS THROUGH THE FULL LENGTH OF THE JAMB (INC. CORNER ANCHORAGE)

INSTRUCTIONS ON USING THE ANCHORAGE TABLES:

1. DETERMINE THE DESIGN PRESSURE REQUIRED AND CHOOSE THE APPROPRIATE CHART.

2. USING THE NOMINAL PANEL SIZE, AND THE PREDETERMINED ANCHORAGE TYPE, FIND THE REQUIRED ANCHORAGE QUANTITY.

3. INSTALL WITH THE ANCHOR CONDITIONS OF THE NOTES AND DETAILS OF SHEETS 13 & 14 OF 18.

PRODUCT REVISED
as complying with the Florida Building Code
Acceptance No 15-0612.06
Expiration Date Feb. 14, 2018
By Manuel Seroz
Miami-Dade Product Control

ANTHONY LYNN MILLER
LICENSE
No. 58705
6/8/15
STATE OF FLORIDA
PROFESSIONAL ENGINEER

A. LYNN MILLER, P.E.
P.E.# 58705

Revised By:	Date:	Revisions:	
J.R.	06/02/15	D	UPDATE TO 2014 FBC, (5TH EDITION)
Revised By:	Date:	Revisions:	
Revised By:	Date:	Revisions:	
Drawn By: J.R.	Date: 8/01/07	Checked By:	Date:

1070 TECHNOLOGY DRIVE
NOKOMIS, FL 34275

P.O. BOX 1529
NOKOMIS, FL 34274

PGT
Visibly Better

Description: ANCHOR QUANTITIES FOR 120 DP

Title: ALUM. SGD SERIES 3030, (LM & SM)

Series/Model:	Scale:	Sheet:	Drawing No.	Rev:
SGD3030	NTS	16 of 18	3030-LM-120	D

Anchor Quantity Required for Design Pressure of: +105.0 -105.0

FOR THE JAMB, THE HEAD & SILL CLUSTER AND THE HEAD & SILL OUTSIDE OF THE CLUSTER

NOM. PANEL WIDTH (IN)	FRAME SIDE	NOM. PANEL HEIGHT (IN) 80			84			96			108			120		
		Anchor Type 1	Anchor Type 2	Anchor Type 3	Anchor Type 1	Anchor Type 2	Anchor Type 3	Anchor Type 1	Anchor Type 2	Anchor Type 3	Anchor Type 1	Anchor Type 2	Anchor Type 3	Anchor Type 1	Anchor Type 2	Anchor Type 3
24	Head & Sill	C2+2	C2+2	C2+2	C2+2	C2+2	C4+2	C4+2	C2+2	C4+2	NOT AVAILABLE IN THESE SIZES					
	Jamb	10	10	10	10	10	10	12	12	12						
30	Head & Sill	C4+4	C2+4	C4+4	C4+4	C4+4	C4+4	C4+4	C4+4	C4+4	C4+4	C4+4	C4+4			
	Jamb	10	10	10	10	10	10	12	12	12	14	14	14			
36	Head & Sill	C4+4	C4+4	C4+4	C4+4	C4+4	C4+4	C4+4	C4+4	C4+4	C4+4	C4+4	C4+4	C6+4	C4+4	C6+4
	Jamb	10	10	10	10	10	10	12	12	12	14	14	14	14	14	14
42	Head & Sill	C4+4	C4+4	C4+4	C4+4	C4+4	C4+4	C4+4	C4+4	C4+4	C6+4	C4+4	C6+4	C6+4	C6+4	C6+4
	Jamb	10	10	10	10	10	10	12	12	12	14	14	14	14	14	14
48	Head & Sill	C4+6	C4+6	C4+6	C4+6	C4+6	C4+6	C4+6	C4+6	C6+6	C6+6	C4+6	C6+6	C6+6	C6+6	C6+6
	Jamb	10	10	10	10	10	10	12	12	12	14	14	14	14	14	14
54	Head & Sill	C4+6	C4+6	C4+6	C4+6	C4+6	C4+6	C6+6	C4+6	C6+6	C6+6	C6+6	C6+6	NOT AVAILABLE IN THESE SIZES		
	Jamb	10	10	10	10	10	10	12	12	12	14	14	14			
60	Head & Sill	C4+6	C4+6	C4+6	C4+6	C4+6	C4+6	C6+6	C4+6	C6+6	C6+6	C6+6	C6+6			
	Jamb	10	10	10	10	10	10	12	12	12	14	14	14			

ANCHOR TYPES:
1. 1/4" ELCO ULTRACON INTO CONCRETE/CMU
2. 1/4" ELCO CRETE-FLEX INTO CONCRETE/CMU
3. #14 WOOD SCREW OR 1/4" ELCO CRETE-FLEX, INTO WOOD

TABLE KEY

TOTAL # OF ANCHORS THROUGH THE HEAD & SILL, TO THE LEFT AND RIGHT OF PANEL MEETING POINT

TOTAL # OF ANCHORS AT THE PANEL CENTER THROUGH THE HEAD & SILL (NOT INC. CORNER ANCHORAGE)

C8+10
18

TOTAL # OF ANCHORS THROUGH THE FULL LENGTH OF THE JAMB (INC. CORNER ANCHORAGE)

INSTRUCTIONS ON USING THE ANCHORAGE TABLES:

1. DETERMINE THE DESIGN PRESSURE REQUIRED AND CHOOSE THE APPROPRIATE CHART.

2. USING THE NOMINAL PANEL SIZE, AND THE PREDETERMINED ANCHORAGE TYPE, FIND THE REQUIRED ANCHORAGE QUANTITY.

3. INSTALL WITH THE ANCHOR CONDITIONS OF THE NOTES AND DETAILS OF SHEETS 13 & 14 OF 18.

PRODUCT REVISED
as complying with the Florida Building Code
Acceptance No 15-0612.06
Expiration Date Feb. 14, 2018
By Manuel Perez
Miami-Dade Product Control

ANTHONY LYNN MILLER
LICENSE
No. 58705
4-7-8-15
STATE OF FLORIDA
PROFESSIONAL ENGINEER

A. LYNN MILLER, P.E.
P.E.# 58705

Revsd By:	Date:	Revisions:	
J.R.	06/02/15	D	UPDATE TO 2014 FBC, (5TH EDITION)
Revsd By:	Date:	Revisions:	
Revsd By:	Date:	Revisions:	
Drawn By: J.R.	Date: 8/01/07	Checked By:	Date:

1070 TECHNOLOGY DRIVE
NOKOMIS, FL 34275

P.O. BOX 1529
NOKOMIS, FL 34274

PGT Visibly Better

Description: ANCHOR QUANTITIES FOR 105 DP

Title: ALUM. SGD SERIES 3030, (LM & SM)

Series/Model:	Scale:	Sheet:	Drawing No.	Rev:
SGD3030	NTS	17 of 18	3030-LM-120	D

Anchor Quantity Required for Design Pressure of: +90.0 -90.0

FOR THE JAMB, THE HEAD & SILL CLUSTER AND THE HEAD & SILL OUTSIDE OF THE CLUSTER

NOM. PANEL WIDTH (IN)	FRAME SIDE	NOM. PANEL HEIGHT (IN) 80			84			96			108			120		
		Anchor Type 1	Anchor Type 2	Anchor Type 3	Anchor Type 1	Anchor Type 2	Anchor Type 3	Anchor Type 1	Anchor Type 2	Anchor Type 3	Anchor Type 1	Anchor Type 2	Anchor Type 3	Anchor Type 1	Anchor Type 2	Anchor Type 3
24	Head & Sill	C2+2	C2+2	C2+2	C2+2	C2+2	C4+2	C4+2	C2+2	C4+2	NOT AVAILABLE IN THESE SIZES					
	Jamb	10	10	10	10	10	10	12	12	12						
30	Head & Sill	C4+4	C2+4	C4+4	C4+4	C4+4	C4+4	C4+4	C4+4	C4+4	C4+4	C4+4	C4+4			
	Jamb	10	10	10	10	10	10	12	12	12	14	14	14			
36	Head & Sill	C4+4	C4+4	C4+4	C4+4	C4+4	C4+4	C4+4	C4+4	C4+4	C4+4	C4+4	C4+4	C6+4	C4+4	C6+4
	Jamb	10	10	10	10	10	10	12	12	12	14	14	14	14	14	14
42	Head & Sill	C4+4	C4+4	C4+4	C4+4	C4+4	C4+4	C4+4	C4+4	C4+4	C6+4	C4+4	C6+4	C6+4	C6+4	C6+4
	Jamb	10	10	10	10	10	10	12	12	12	14	14	14	14	14	14
48	Head & Sill	C4+6	C4+6	C4+6	C4+6	C4+6	C4+6	C4+6	C4+6	C6+6	C6+6	C4+6	C6+6	C6+6	C6+6	C6+6
	Jamb	10	10	10	10	10	10	12	12	12	14	14	14	14	14	14
54	Head & Sill	C4+6	C4+6	C4+6	C4+6	C4+6	C4+6	C6+6	C4+6	C6+6	C6+6	C6+6	C6+6	NOT AVAILABLE IN THESE SIZES		
	Jamb	10	10	10	10	10	10	12	12	12	14	14	14			
60	Head & Sill	C4+6	C4+6	C4+6	C4+6	C4+6	C4+6	C6+6	C4+6	C6+6	C6+6	C6+6	C6+6			
	Jamb	10	10	10	10	10	10	12	12	12	14	14	14			

ANCHOR TYPES:
1. 1/4" ELCO ULTRACON INTO CONCRETE/CMU
2. 1/4" ELCO CRETE-FLEX INTO CONCRETE/CMU
3. #14 WOOD SCREW OR 1/4" ELCO CRETE-FLEX, INTO WOOD

TABLE KEY

TOTAL # OF ANCHORS THROUGH THE HEAD & SILL, TO THE LEFT AND RIGHT OF PANEL MEETING POINT

TOTAL # OF ANCHORS AT THE PANEL CENTER THROUGH THE HEAD & SILL (NOT INC. CORNER ANCHORAGE)

C8+10
18

TOTAL # OF ANCHORS THROUGH THE FULL LENGTH OF THE JAMB (INC. CORNER ANCHORAGE)

INSTRUCTIONS ON USING THE ANCHORAGE TABLES:
1. DETERMINE THE DESIGN PRESSURE REQUIRED AND CHOOSE THE APPROPRIATE CHART.

2. USING THE NOMINAL PANEL SIZE, AND THE PREDETERMINED ANCHORAGE TYPE, FIND THE REQUIRED ANCHORAGE QUANTITY.

3. INSTALL WITH THE ANCHOR CONDITIONS OF THE NOTES AND DETAILS OF SHEETS 13 & 14 OF 18.

PRODUCT REVISED
as complying with the Florida Building Code
Acceptance No 15-0612.06
Expiration Date Feb. 14, 2018
By Manuel Perez
Miami-Dade Product Control

ANTHONY LYNN MILLER
LICENSE
No. 58705
6/8/15
STATE OF FLORIDA
PROFESSIONAL ENGINEER
A. LYNN MILLER, P.E.
P.E.# 58705

Revsd By:	Date:	Revisions:	
J.R.	06/02/15	D	UPDATE TO 2014 FBC, (5TH EDITION)
Revsd By:	Date:	Revisions:	
Revsd By:	Date:	Revisions:	
Drawn By: J.R.	Date: 8/01/07	Checked By:	Date:

1070 TECHNOLOGY DRIVE
NOKOMIS, FL 34275

P.O. BOX 1529
NOKOMIS, FL 34274

PGT Visibly Better

Description: ANCHOR QUANTITIES FOR 90 DP

Title: ALUM. SGD SERIES 3030, (LM & SM)

Series/Model:	Scale:	Sheet:	Drawing No.	Rev:
SGD3030	NTS	18 of 18	3030-LM-120	D